1997-2005 NSX Main Menu

General Info 

Specifications 

Maintenance 

Engine 

Cooling 

Fuel and Emissions 

*Transaxle 

Steering 

Suspension 

*Brakes (Including ABS) 

*Body 

*Heating, Ventilation and Air Conditioning 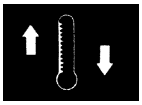

*Body Electrical 

*Engine Electrical 

*SRS 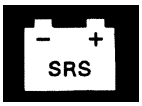

As sections w/ * include SRS components,
special precautions are required when servicing.

General Information

Chassis and Paint Codes
- ’97 Model
  - U.S. Model 1–2
  - Canada Model 1–3
- ’98 Model
  - U.S. Model 1–2a
  - Canada Model 1–3a
- ’99 Model
  - U.S. Model 1–2b
  - Canada Model 1–3b
- ’00 Model
  - U.S. Model 1–2c
  - Canada Model 1–3c
- ’01 Model 1–2d
- ’02 Model 1–2e
- ’03 Model 1–2f
- ’04 Model 1–2g
- ’05 Model 1–2h

Identification Number Locations
- ’97-99 Models 1–9
- ’00 Model 1–4c
- ’01 Model 1–3d
- ’02 Model 1–3e
- ’03 Model 1–3f
- ’04 Model 1–3g
- ’05 Model 1–3h

Warning/Caution Label Locations
- ’97 Model 1–5
- ’98–04 Models 1–4a

Under–hood Emission Control Label
- ’97 Model 1–9
- ’98 Model 1–7a
- ’99 Model 1–4b
- ’00 Model 1–5c
- ’01 Model 1–4d
- ’02 Model 1–4e
- ’03 Model 1–4f
- ’04 Model 1–4g
- ’05 Model 1–4h

Lifts and Support Points
- Lift and Safety Stands 1–10
- Floor Jack 1–11

Towing 1–12

Service Precautions
- Handling of Special Nuts and Bolts 1–13
- Handling of Tires 1–13
- Engine Steam Cleaning (NSX–T only) 1–13

Chassis and Paint Codes

U.S. Model

Vehicle Identification Number

JH4 NA1 2 3 * W T 000001

Manufacturer, Make and Type of Vehicle
JH4: HONDA MOTOR CO., LTD. ACURA, Passenger vehicle

Line, Body and Engine Type
NA1: NSX/C30A1, NSX-T/C30A1
NA2: NSX/C32B1, NSX-T/C32B1

Body Type and Transmission Type
1: Coupe/6-speed Manual
Open Top/6-speed Manual
2: Coupe/4-speed Automatic
Open Top/4-speed Automatic

Vehicle Grade (Series)
3: Coupe
6: Open Top

Check Digit

Model Year
W: 1998

Factory Code
T: Tochigi Factory in JAPAN (Takanezawa)

Serial Number

Engine Number

C30A1 - 7000001

Engine Type

Serial Number
C30A1: 7000001~
C32B1: 2000001~

Transmission Number

SR8M - 7000001

Transmission Type
SR8M: 6-speed Manual Transmission
MR9A: 4-speed Automatic Transmission

Serial Number
SR8M: 7000001~
MR9A: 7000001~

Paint Code

Paint Code	Color	Coupe	Open Top
NH546M	Kaiser Silver Metallic	○	○
NH-547	Berlina Black	○	○
NH-565	Grand Prix White	○	○
R-77	Formula Red	○	○
Y52P	Spa Yellow Pearl	○	○
B-66P	Monte Carlo Blue Pearl	○	○

Vehicle Identification Number and Federal Motor Vehicle Safety Standard Certification

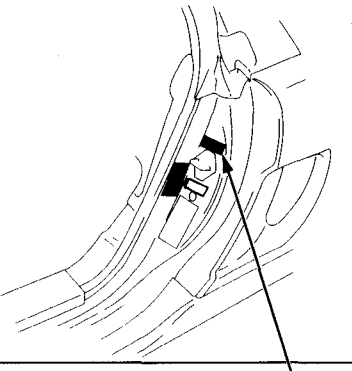

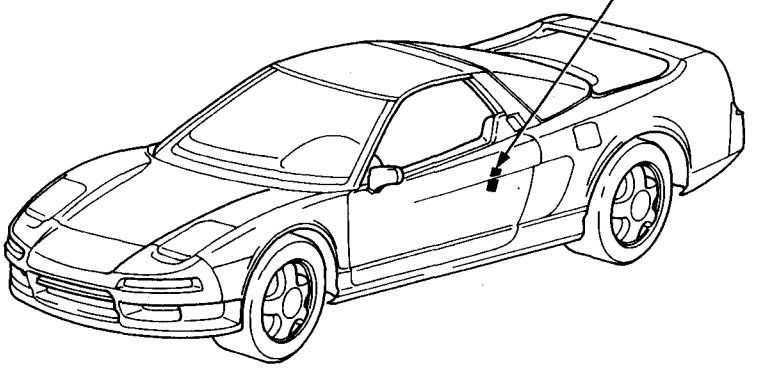

Paint Code

COLOR
R-77

CANADA Model

Vehicle Identification Number

JH4 NA1 2 3 * W T 800001

Manufacturer, Make and Type of Vehicle
JH4: HONDA MOTOR CO., LTD. ACURA, Passenger vehicle

Line, Body and Engine Type
NA1: NSX/C30A1, NSX-T/C30A1
NA2: NSX/C32B1, NSX-T/C32B1

Body Type and Transmission Type
1: Coupe/6-speed Manual
Open Top/6-speed Manual
2: Coupe/4-speed Automatic
Open Top/4-speed Automatic

Vehicle Grade
3: Coupe
6: Open Top

Check Digit

Model Year
W: 1998

Factory Code
T: Tochigi Factory in JAPAN (Takanezawa)

Serial Number

Engine Number

C30A1 - 7000001

Engine Type

Serial Number
C30A1: 7000001~
C32B1: 2000001~

Transmission Number

SR8M - 7000001

Transmission Type
SR8M: 6-speed Manual Transmission
MR9A: 4-speed Automatic Transmission

Serial Number
SR8M: 7000001~
MR9A: 7000001~

Paint Code

Paint Code	Color	Coupe	Open Top
NH546M	Kaiser Silver Metallic	○	○
NH-547	Berlina Black	○	○
NH-565	Grand Prix White	○	○
R-77	Formula Red	○	○
Y52P	Indy Yellow Pearl	○	○
B-66P	Monte Carlo Blue Pearl	○	○

Vehicle Identification Number and Canadian Motor Vehicle Safety Standard Certification

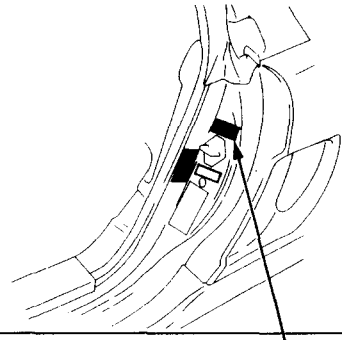

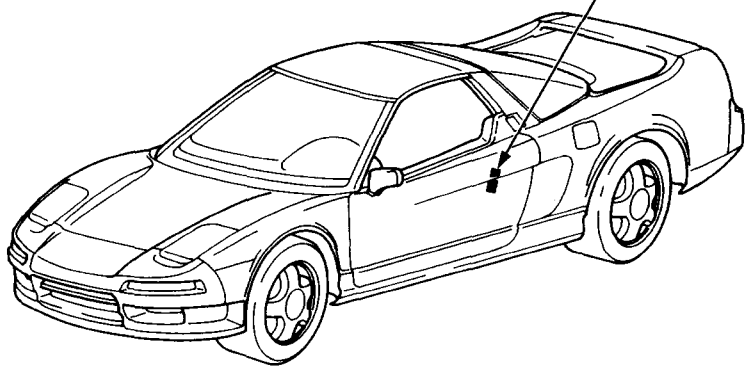

Paint Code

COLOR R-77

Warning/Caution Label Locations

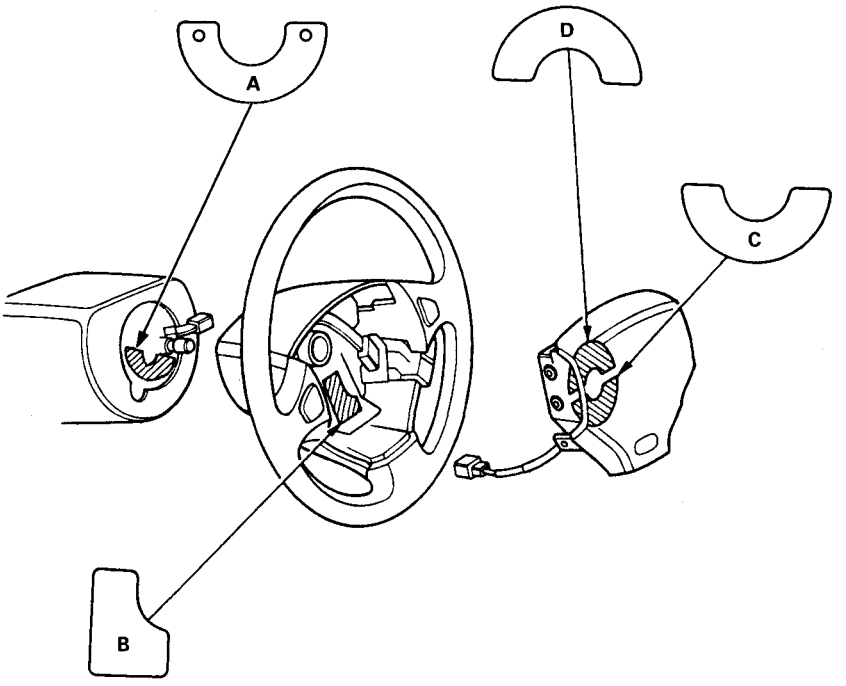

A: CABLE REEL CAUTION

SRS
REFER TO SERVICE MANUAL FOR DETAILED INSTRUCTIONS.

B: STEERING WHEEL NOTICE

NOTICE
IMPROPER STEERING WHEEL REMOVAL OR INSTALLATION CAN DAMAGE SRS COMPONENTS.
FOLLOW SERVICE MANUAL INSTRUCTIONS CAREFULLY.

C: DRIVER MODULE WARNING

A WARNING
THE AIRBAG INFLATOR IS EXPLOSIVE, AND, IF ACCIDENTALLY DEPLOYED, CAN SERIOUSLY HURT OR KILL YOU.
- DO NOT USE ELECTRICAL TEST EQUIPMENT OR PROBING DEVICES.
  THEY CAN CAUSE ACCIDENTAL DEPLOYMENT.
- NO SERVICEABLE PARTS INSIDE. DO NOT DISASSEMBLE.
- PLACE AIRBAG UPRIGHT WHEN REMOVED.
- FOLLOW SERVICE MANUAL INSTRUCTIONS CAREFULLY.

D: DRIVER'S INFLATOR CAUTION

⚠ DANGER
EXPLOSIVE/FLAMMABLE
CONTACT WITH ACID, WATER OR HEAVY METALS SUCH AS COPPER, LEAD OR MERCURY MAY PRODUCE HARMFUL AND IRRITATING GASES OR EXPLOSIVE COMPOUNDS. STORAGE TEMPERATURES MUST NOT EXCEED 200 F (100 C). FOR PROPER HANDLING, STORAGE AND DISPOSAL PROCEDURES REFER TO SERVICE MANUAL, SRS SUPPLEMENT.
POISON
CONTAINS POISONOUS SODIUM AZIDE AND POTASSIUM NITRATE.
FIRST AID
IF CONTENTS ARE SWALLOWED, INDUCE VOMITING.
FOR EYE CONTACT, FLUSH EYES WITH WATER FOR 15 MINUTES. IF GASES (FROM ACID OR WATER CONTACT) ARE INHALED, SEEK FRESH AIR. IN EVERY CASE, GET PROMPT MEDICAL ATTENTION.
KEEP OUT OF REACH OF CHILDREN.

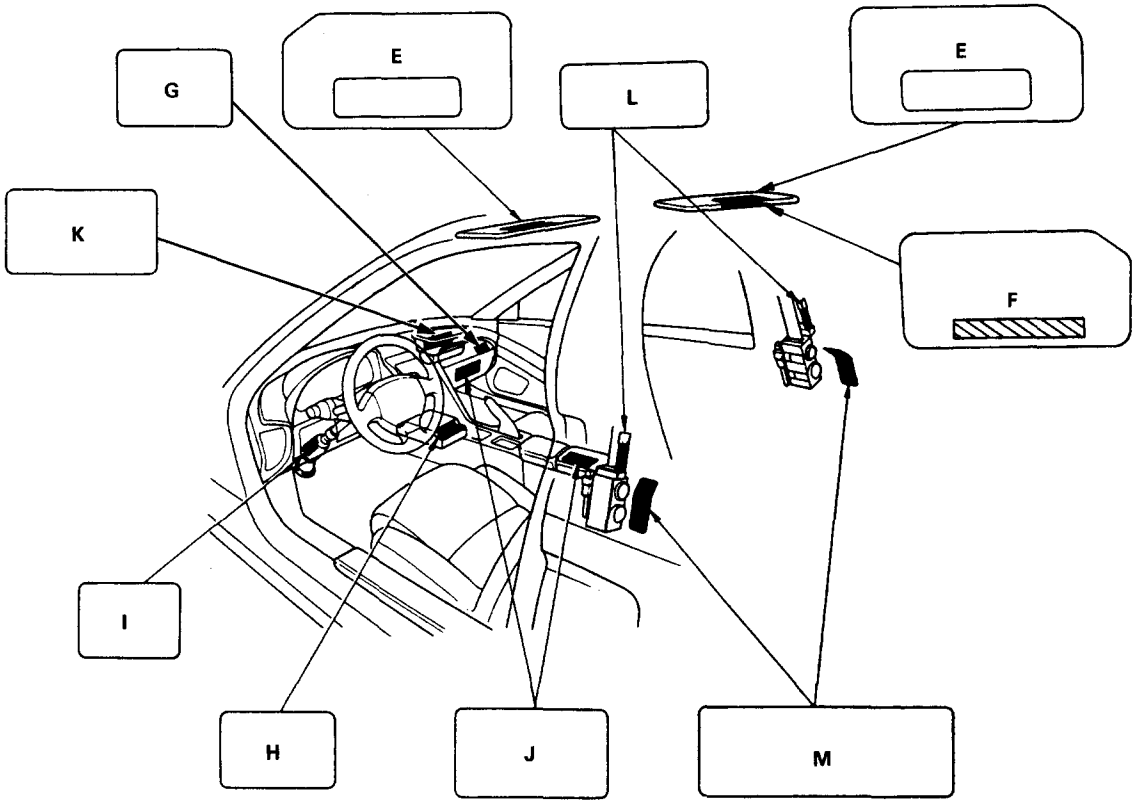

E: DRIVER INFORMATION: U.S. MODEL

WARNING
DEATH OR SERIOUS INJURY CAN OCCUR.
- CHILDREN 12 AND UNDER CAN BE KILLED BY THE AIRBAG.
- THE BACK SEAT IS THE SAFEST PLACE FOR CHILDREN.
- NEVER PUT A REAR-FACING CHILD SEAT IN THE FRONT PASSENGER SEAT.
- SIT AS FAR BACK AS POSSIBLE FROM THE AIRBAG.
- ALWAYS USE SEAT BELTS AND CHILD RESTRAINTS.

CANADA MODEL

SRS
AIRBAG ALWAYS WEAR YOUR SEAT BELT
- THIS CAR IS EQUIPPED WITH A DRIVER AIRBAG AND A FRONT SEAT PASSENGER AIRBAG AS A SUPPLEMENTAL RESTRAINT SYSTEM (SRS).
- IT IS DESIGNED TO SUPPLEMENT THE SEAT BELT.
- BEFORE DRIVING READ LABEL INSIDE THE GLOVE BOX.

F: ASSISTANT INFORMATION: U.S. MODEL

AIRBAG WARNING
FLIP VISOR OVER

G: PASSENGER AIRBAG CAUTION: U.S. MODEL

WARNING
CHILDREN CAN BE KILLED OR INJURED BY PASSENGER AIRBAG.
THE BACK SEAT IS THE SAFEST PLACE FOR CHILDREN 12 AND UNDER. MAKE SURE ALL CHILDREN USE SEAT BELTS OR CHILD SEATS.

H: MONITOR NOTICE

NOTICE SRS
- NO SERVICEABLE PARTS INSIDE.
- REFER TO SERVICE MANUAL FOR DETAILED INSTRUCTIONS.

I: STEERING COLUMN NOTICE

NOTICE
TO PREVENT SRS DAMAGE, REMOVE STEERING WHEEL BEFORE REMOVING STEERING SHAFT CONNECTING BOLT.

J: CONSOLE BOX/GLOVE BOX INFORMATION CANADA MODEL

AIRBAG INFORMATION
SUPPLEMENTAL RESTRAINT SYSTEM (SRS)
- THE DATE OF INSTALLATION IS SHOWN ON THE CERTIFICATION PLATE, LOCATED ON THE DRIVER'S DOORJAMB.
- DIAGNOSTIC CHECKS AND REPLACEMENT OF SRS COMPONENTS MUST BE DONE BY AN AUTHORIZED DEALER.
- SEE YOUR OWNER'S MANUAL FOR ADDITIONAL SRS INFORMATION.

(cont'd)

Warning/Caution Label Locations

(cont'd)

K: PASSENGER'S INFLATOR CAUTION

⚠ DANGER
EXPLOSIVE/FLAMMABLE
CONTACT WITH ACID, WATER, OR HEAVY METALS SUCH AS COPPER, LEAD, OR MERCURY MAY PRODUCE HARMFUL AND IRRITATING GASES OR EXPLOSIVE COMPOUNDS.
STORAGE TEMPERATURES MUST NOT EXCEED 200°F (100 C). FOR PROPER HANDLING, STORAGE, AND DISPOSAL PROCEDURES, REFER TO SERVICE MANUAL, SRS SUPPLEMENT
POISON
CONTAINS POISONOUS SODIUM AZIDE AND POTASSIUM NITRATE.
FIRST AID
IF CONTENTS ARE SWALLOWED, INDUCE VOMITING.
FOR EYE CONTACT, FLUSH EYES WITH WATER FOR 15 MINUTES.
IF GASES (FROM ACID OR WATER CONTACT) ARE INHALED, SEEK FRESH AIR. IN EVERY CASE, GET PROMPT MEDICAL ATTENTION.
KEEP OUT OF REACH OF CHILDREN.

⚠ WARNING
THE AIRBAG INFLATOR IS EXPLOSIVE, AND, IF ACCIDENTALLY DEPLOYED, CAN SERIOUSLY HURT OR KILL YOU.
- DO NOT USE ELECTRICAL TEST EQUIPMENT OR PROBING DEVICES.
  THEY CAN CAUSE ACCIDENTAL DEPLOYMENT.
- NO SERVICEABLE PARTS INSIDE. DO NOT DISASSEMBLE.
- PLACE AIRBAG UPRIGHT WHEN REMOVED.
- FOLLOW SERVICE MANUAL INSTRUCTIONS CAREFULLY.

L: TENSIONER POWER SOURCE CAUTION

SEAT BELT TENSIONER
DO NOT TAMPER, REFER TO SERVICE MANUAL FOR COMPLETE INSTRUCTIONS.

M: TENSIONER ELR CAUTION

⚠ WARNING
EXPLOSIVE MATERIAL INSIDE
YOU CAN BE SERIOUSLY HURT OR BURNED.
- INSTALL RED SHORT CONNECTOR WHEN WIRE HARNESS IS DISCONNECTED.
- DO NOT TAMPER OR DISASSEMBLE.
  NO SERVICEABLE PARTS INSIDE.
- USE ONLY APPROVED ELECTRICAL TESTERS FOR CIRCUIT DIAGNOSIS.
  REFER TO SERVICE MANUAL FOR COMPLETE INSTRUCTIONS.

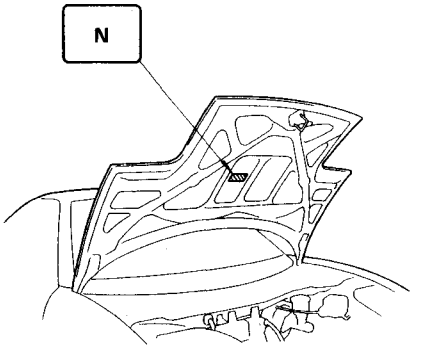

N: SRS WARNING (HOOD)

SUPPLEMENTAL RESTRAINT SYSTEM (SRS)
THIS VEHICLE IS EQUIPPED WITH DRIVER AND FRONT SEAT PASSENGER AIRBAGS AND FRONT SEAT BELT TENSIONER SYSTEMS.
ALL SRS ELECTRICAL WIRING AND CONNECTORS ARE COLORED YELLOW.
TAMPERING WITH, DISCONNECTING OR USING ELECTRICAL TEST EQUIPMENT ON THE SRS WIRING CAN MAKE THE SYSTEM INOPERATIVE OR CAUSE ACCIDENTAL FIRING OF THE INFLATOR.

⚠ WARNING
THE AIRBAG INFLATOR IS EXPLOSIVE AND, IF ACCIDENTALLY DEPLOYED, CAN SERIOUSLY HURT YOU.
FOLLOW SERVICE MANUAL INSTRUCTIONS CAREFULLY.

Under-hood Emissions Control Label

Emission Group Identification

Example:

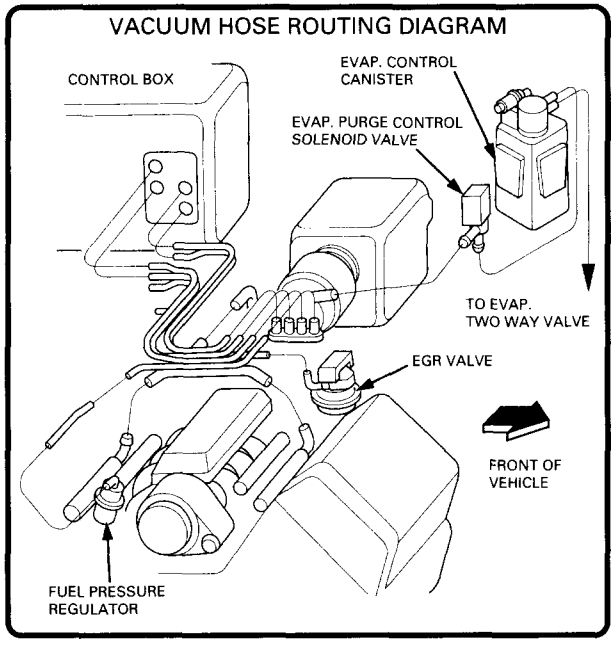

VEHICLE EMISSION CONTROL INFORMATION

ENGINE FAMILY-WHNXV03. 0AA1
DISPLACEMENT-3.0L
EVAPORATIVE FAMILY-WHNXE0094AAX
(§86. 130-96 PROCEDURES)

CATALYST 2TVC 2HO2S (2) EGR SFI

OBD II CERTIFIED

NO OTHER ADJUSTMENTS NEEDED.

VALVE LASH	IN		0.17 ± 0.02 mm COLD	
	EX		0.19 ± 0.02 mm COLD	
SPARK PLUG	TYPE	NGK: PFR6L-11 ND: PK20PR-L11	GAP	1.1 $^{0}_{0.1}$ mm

THIS VEHICLE CONFORMS TO U.S. EPA AND STATE OF CALIFORNIA REGULATIONS APPLICABLE TO 1998 MODEL YEAR NEW MOTOR VEHICLES.

30VHGRBG

PR7-A34 HONDA MOTOR CO., LTD. A•E

50ST (50 States):
THIS VEHICLE CONFORMS TO U.S. EPA AND STATE OF CALIFORNIA REGULATIONS APPLICABLE TO 1998 MODEL YEAR NEW MOTOR VEHICLES.

49ST (49 States/Federal):
THIS VEHICLE CONFORMS TO U.S. EPA REGULATIONS APPLICABLE TO 1998 MODEL YEAR NEW MOTOR VEHICLES.

CAL (California):
THIS VEHICLE CONFORMS TO U.S. EPA AND STATE OF CALIFORNIA REGULATIONS APPLICABLE TO 1998 MODEL YEAR NEW PASSENGER CARS PROVIDED THAT THIS VEHICLE IS ONLY INTRODUCED INTO COMMERCE FOR SALE IN THE STATE OF CALIFORNIA.

Engine and Evaporative Families

Engine Family: W HNX V 03.0 AA1

Model Year
W: 1998
Manufacturer
HNX: Honda
Type
V: Light Duty Vehicle/Passenger Car
Displacement
Sequence Characters

Evaporative Family: W HNX E 0094 AAX

Model Year
W: 1998
Manufacturer
HNX: Honda
Type
E: EVAP
Canister Work Capacity (grams)
Sequence Characters

Lift and Support Points

Lift and Safety Stands

CAUTION:

- **If ground clearance is inadequate to clear the shop lift, either;**
  - **— Install rubber spacers on the coil springs to raise the vehicle. Use the floor jack procedures to raise the vehicle (page 1-11).**
  - **or**
  - **— Remove the chin spoiler,**
  - **or**
  - **— If you need even more clearance, install the rubber spacers and remove the chin spoiler.**
- **Follow the lift manufacturer's instructions.**
- **Use rubber pad adapters on the lift to avoid damaging the vehicle.**

Spacer Installation

1. Place the rubber contact pads as shown.
2. Raise the lift a few inches, and rock the vehicle to be sure it is firmly supported.
3. Raise the lift to full height, and inspect the lift points for solid support.
4. Install rubber spacers on the coil springs.

NOTE: Use the same support points to support the vehicle on safety stands.

CAUTION: Remove the rubber spacers after lowering the vehicle. Do not drive the vehicle with rubber spacers installed between the spring.

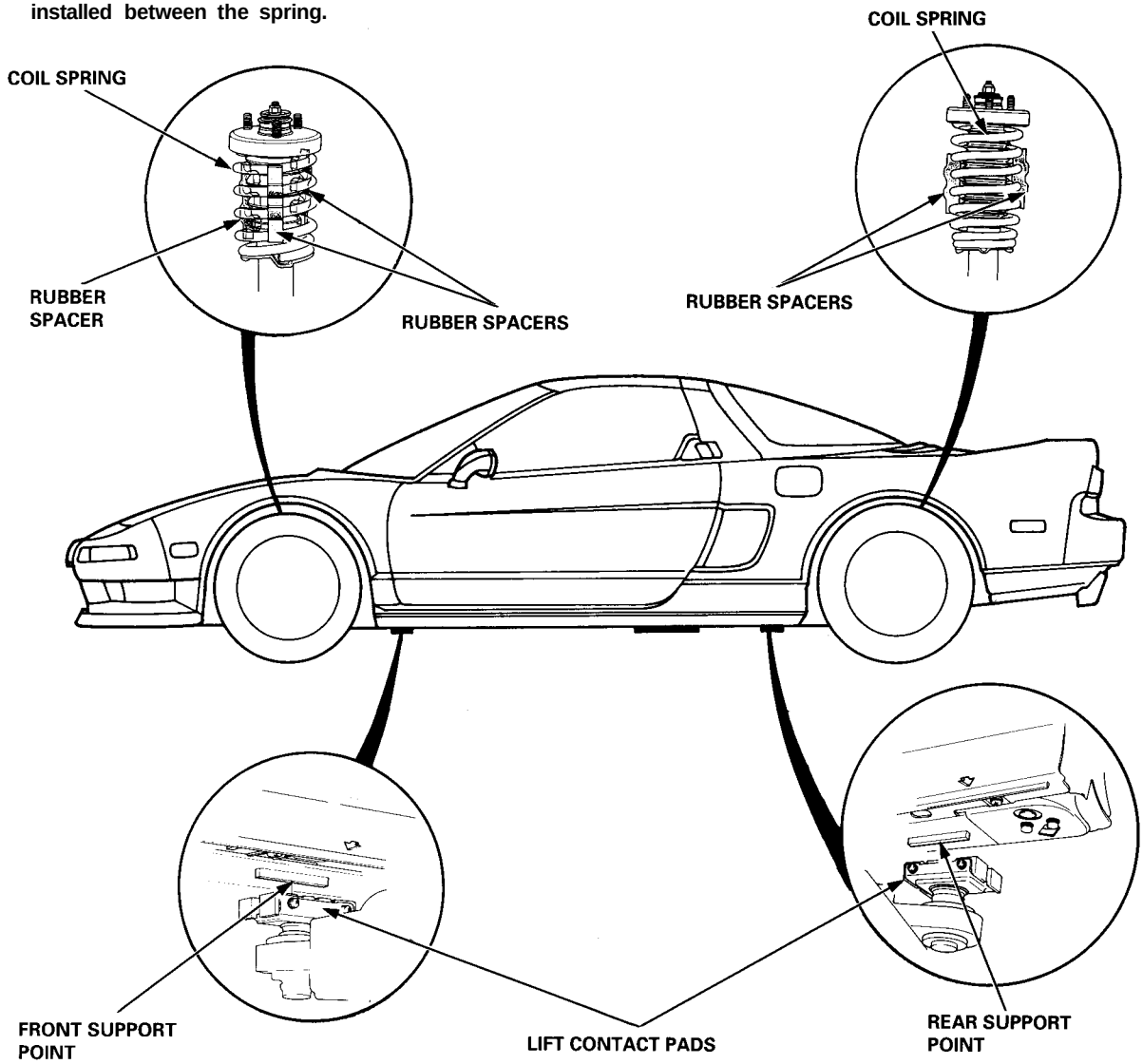

Floor Jack

CAUTION: Place a rubber pad between the lift platform and the center support point to avoid damaging the vehicle. The lift platform must contact the support point only; it must not come in contact with any other part of the vehicle.

1. Set the parking brake, and block the wheels that are not being lifted.
2. When lifting the rear of the vehicle, put the gearshift lever in reverse (Automatic in [P] position).
3. Raise the vehicle high enough to insert the safety stands.
4. Adjust and place the safety stands as shown on page 1-12 so the vehicle will be approximately level, then lower the vehicle onto them.

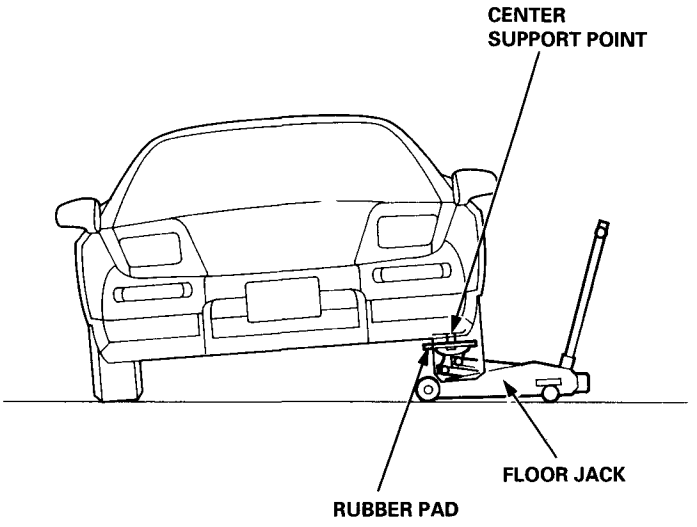

⚠ WARNING

- **Always use safety stands when working on or under any vehicle that is supported by only a jack.**
- **Never attempt to use a bumper jack for lifting or supporting the vehicle.**

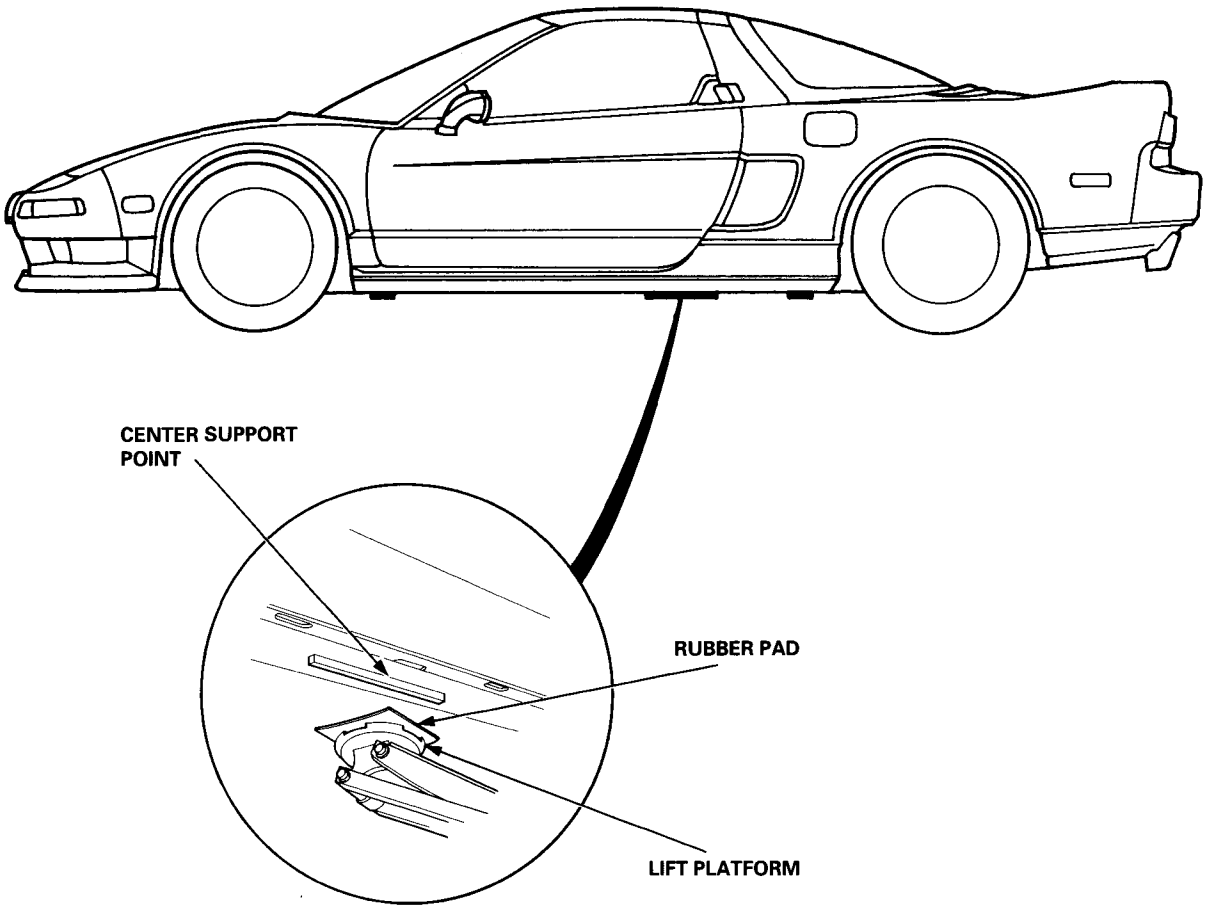

Towing

If the vehicle needs to be towed, call a professional towing service. Never tow the vehicle behind another vehicle with just a rope or chain. It is very dangerous.

There are three widely used methods of towing a vehicle.

Flat-bed Equipment — The operator loads the vehicle on the back of a truck. This is the only recommended way of towing the NSX & NSX-T.

Wheel Lift Equipment — The tow truck driver uses two pivoting arms which go under the tires (front or rear) and lift them off the ground. The other two wheels remain on the ground. This towing method is not recommended. Because of the NSX & NSX-T's low ground clearance, the body can be damaged going over large bumps or up inclines.

Sling-type Equipment — The tow truck uses metal chains with hooks on the ends. These hooks go around parts of the frame or suspension and the cables lift that end of the vehicle off the ground. Damage to the vehicle's suspension and body is almost certain if this method of towing is attempted.

If the NSX & NSX-T cannot be towed by flat-bed, it should be towed with the rear wheels off the ground. If, due to damage, the vehicle must be towed with the rear wheels on the ground, do the following:

Manual Transmission
- Release the parking brake
- Shift the transmission to Neutral

Automatic Transmission
- Release the parking brake
- Start the engine
- Shift to [D] position, then to [N] position
- Turn off the engine

NOTICE:
- Improper towing preparation will damage the transmission. Follow the above procedure exactly. The car must be towed on a flat bed if the engine will not start or the transmission will not shift.
- It is best to tow the vehicle no farther than 50 miles (80 km), and keep the speed below 35 mph (55 km/h).
- Trying to lift or tow the vehicle by the bumpers will cause serious damage. The bumpers are not designed to support the vehicle's weight.

Front:

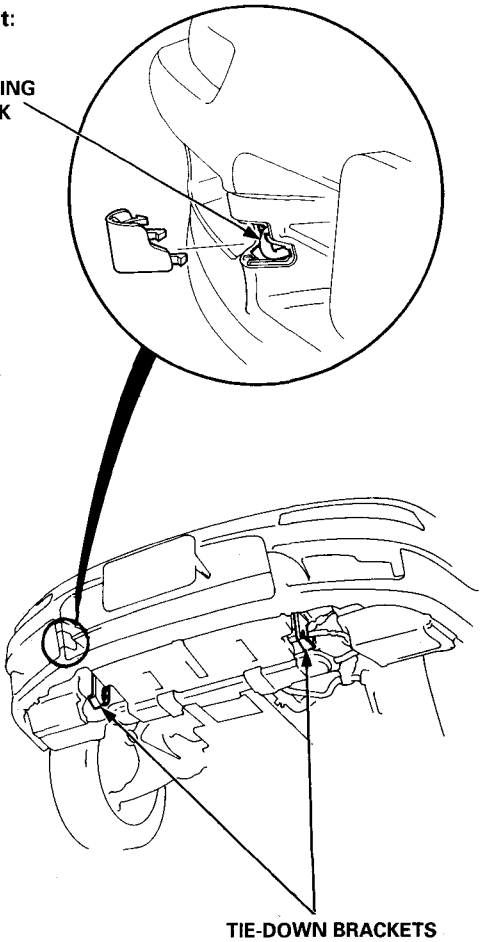

Rear:

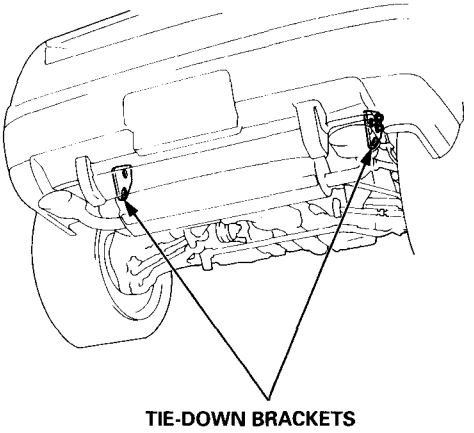

Service Precautions

Handling of Special Nuts and Bolts

Because many sections on this vehicle are constructed with aluminum alloys, use only the special "Dacro" type nuts and bolts recommended by Acura.

NOTE:
- Dacro finish can be identified by gray plating.
- Some Dacro finish bolts have a green coating on the thread section of the bolt for easier application. This type of bolt is called a "Torquer" bolt.
- Use of other types of nuts and bolts may cause electrolysis and corrosion, which in turn could cause the bolt to loosen.

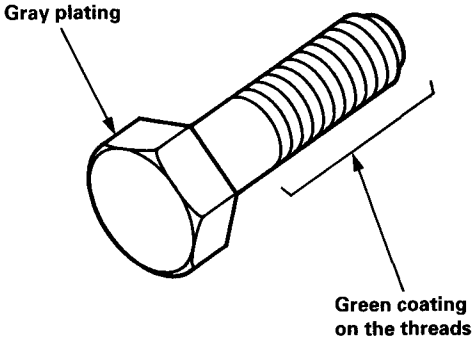

Gray plating: "Dacro" type
Gray plating + Green coating on the threads:
"Torquer" type

1. When replacing nuts and bolts, use only the same type.
2. Tighten the nuts and bolts with a torque wrench to the specifications provided in this manual.
3. Clean all thread ridges with a non-wire-type bristle brush. Foreign matter in the threads may cause the bolt to loosen.
4. Sections on this vehicle requiring the use of Dacro nuts and bolts will be indicated by a (☆) in this manual.

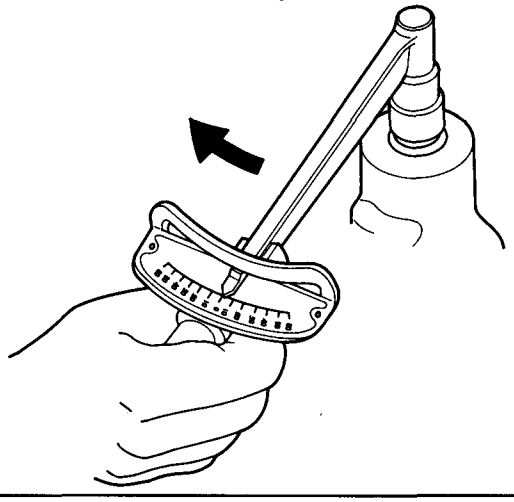

Handling of Tires

- The tires on NSX & NSX-T should not be rotated. The front wheels are 16" in, diameter and the rear wheels are 17" in, so they cannot be rotated front-to-rear. The original-equipment tires on NSX & NSX-T have a unidirectional tread pattern, so they cannot be rotated side-to-side.
- The folding spare tire cannot be repaired or removed from the rim.

Engine Steam-cleaning (NSX-T only)

When steam-cleaning the engine compartment, keep the roof holder switch dry. If the roof holder switch gets wet accidentally, dry it thoroughly with compressed air.

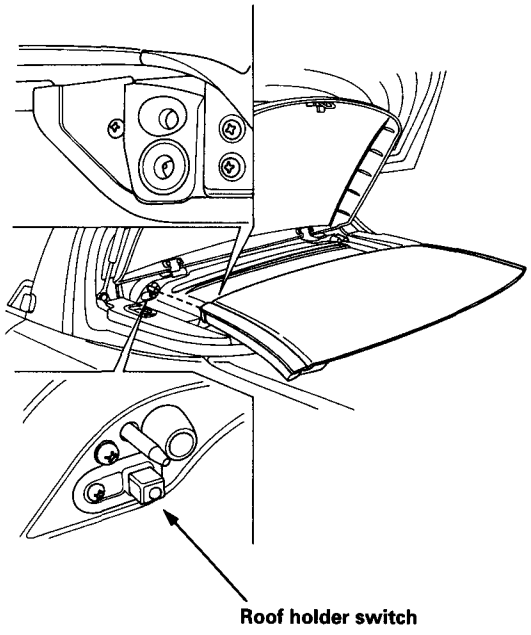

Specifications

Standards and Service Limits

Cylinder Head/Valve Train
- ’97 Model 3–2
- ’98 Model 3–2a
- ’99 Model 3–2b
- ’00 Model 3–2c
- ’01 Model 3–2d
- ’02 Model 3–2e
- ’03 Model 3–2f
- ’04 Model 3–2g
- ’05 Model 3–2h

Engine Block
- ’97 Model 3–3
- ’98 Model 3–3a
- ’99 Model 3–3b
- ’00 Model 3–3c
- ’01 Model 3–3d
- ’02 Model 3–3e
- ’03 Model 3–3f
- ’04 Model 3–3g
- ’05 Model 3–3h

Engine Lubrication
- ’97 Model 3–3
- ’98 Model 3–3a
- ’99 Model 3–3b
- ’00 Model 3–3c
- ’01 Model 3–3d
- ’02 Model 3–3e
- ’03 Model 3–3f
- ’04 Model 3–3g
- ’05 Model 3–3h

Cooling
- ’97 Model 3–4
- ’98 Model 3–4a
- ’99 Model 3–4b
- ’00 Model 3–4c
- ’01 Model 3–4d
- ’02 Model 3–4e
- ’03 Model 3–4f
- ’04 Model 3–4g
- ’05 Model 3–4h

Fuel and Emissions
- ’97 Model 3–4
- ’98 Model 3–4a
- ’99 Model 3–4b
- ’00 Model 3–4c
- ’01 Model 3–4d
- ’02 Model 3–4e
- ’03 Model 3–4f
- ’04 Model 3–4g
- ’05 Model 3–4h

Clutch
- ’97 Model 3–4
- ’98 Model 3–4a
- ’99 Model 3–4b
- ’00 Model 3–4c
- ’01 Model 3–4d
- ’02 Model 3–4e
- ’03 Model 3–4f
- ’04 Model 3–4g
- ’05 Model 3–4h

Manual Transmission
- ’97 Model 3–5
- ’98 Model 3–5a
- ’99 Model 3–5b
- ’00 Model 3–5c
- ’01 Model 3–5d
- ’02 Model 3–5e
- ’03 Model 3–5f
- ’04 Model 3–5g
- ’05 Model 3–5h

Automatic Transmission
- ’97 Model 3–7
- ’98 Model 3–7a
- ’99 Model 3–7b
- ’00 Model 3–7c
- ’01 Model 3–7d
- ’02 Model 3–7e
- ’03 Model 3–7f
- ’04 Model 3–7g
- ’05 Model 3–7h

Differential
- ’97 Model
  - M/T 3–10
  - A/T 3–10
- ’98 Model
  - M/T 3–10a
  - A/T 3–10a
- ’99 Model
  - M/T 3–10b
  - A/T 3–10b
- ’00 Model
  - M/T 3–10c
  - A/T 3–10c
- ’01 Model
  - M/T 3–10d
  - A/T 3–10d
- ’02 Model
  - M/T 3–10e
  - A/T 3–10e
- ’03 Model
  - M/T 3–10f
  - A/T 3–10f
- ’04 Model
  - M/T 3–10g
  - A/T 3–10g
- ’05 Model
  - M/T 3–10h
  - A/T 3–10h

Steering
- ’97 Model 3–11
- ’98 Model 3–11a
- ’99 Model 3–11b
- ’00 Model 3–11c
- ’01 Model 3–11d
- ’02 Model 3–11e
- ’03 Model 3–11f
- ’04 Model 3–11g
- ’05 Model 3–11h

Suspension
- ’97 Model 3–11
- ’98 Model 3–11a
- ’99 Model 3–11b
- ’00 Model 3–11c
- ’01 Model 3–11d
- ’02 Model 3–11e
- ’03 Model 3–11f
- ’04 Model 3–11g
- ’05 Model 3–11h

Brakes
- ’97 Model 3–11
- ’98 Model 3–11a
- ’99 Model 3–11b
- ’00 Model 3–11c
- ’01 Model 3–11d
- ’02 Model 3–11e
- ’03 Model 3–11f
- ’04 Model 3–11g
- ’05 Model 3–11h

Air Conditioning
- ’97 Model 3–12
- ’98 Model 3–12a
- ’99 Model 3–12b
- ’00 Model 3–12c
- ’01 Model 3–12d
- ’02 Model 3–12e
- ’03 Model 3–12f
- ’04 Model 3–12g
- ’05 Model 3–12h

Electrical
- ’97 Model 3–12
- ’98 Model 3–12a
- ’99 Model 3–12b
- ’00 Model 3–12c
- ’01 Model 3–12d
- ’02 Model 3–12e
- ’03 Model 3–12f
- ’04 Model 3–12g
- ’05 Model 3–12h

Design Specifications
- ’97 Model 3–13
- ’98 Model 3–13a
- ’99 Model 3–13b
- ’00 Model 3–13c
- ’01 Model 3–13d
- ’02 Model 3–13e
- ’03 Model 3–13f
- ’04 Model 3–13g
- ’05 Model 3–13h

Body Specifications
- ’97 Model 3–16
- ’98 Model 3–16a
- ’99 Model 3–16b
- ’00 Model 3–16c
- ’01 Model 3–16d
- ’02 Model 3–16e
- ’03 Model 3–16f
- ’04 Model 3–16g
- ’05 Model 3–16h

Standards and Service Limits

Cylinder Head/Valve Train — Section 6

	MEASUREMENT			STANDARD (NEW)	SERVICE LIMIT
Compression	200 rpm and wide open throttle kPa (kgf/cm², psi)	Nominal Minimum Maximum variation		1,370 (14.0, 199) 980 (10.0, 142) 200 (2.0, 28)	
Cylinder head	Warpage Height			——— 150.95 – 151.05 (5.943 – 5.947)	0.05 (0.002) ———
Camshaft	End play Camshaft-to-holder oil clearance Total runout Cam lobe height	 M/T IN	 Primary	0.05 – 0.15 (0.002 – 0.006) 0.050 – 0.089 (0.002 – 0.004) 0.03 (0.0012) max. 37.086 (1.4601)	0.5 (0.02) 0.15 (0.006) 0.04 (0.0016) ———
			Mid	38.037 (1.4975)	———
			Secondary	37.326 (1.4695)	———
		EX	Primary	36.559 (1.4393)	———
			Mid	37.398 (1.4724)	———
			Secondary	36.741 (1.4465)	———
		A/T IN	Primary	37.266 (1.4672)	———
			Mid	37.655 (1.4825)	———
			Secondary	37.504 (1.4765)	———
		EX	Primary	36.559 (1.4393)	———
			Mid	37.398 (1.4724)	———
			Secondary	36.741 (1.4465)	———
Valve	Valve clearance		IN	0.15 – 0.19 (0.006 – 0.007)*3	———
			EX	0.17 – 0.21 (0.007 – 0.008)*3	———
	Valve stem O.D.		IN	5.475 – 5.485 (0.2156 – 0.2159)	5.445 (0.2144)
			EX	5.45 – 5.46 (0.2146 – 0.2150)	5.42 (0.2134)
	Stem-to-guide clearance		IN	0.025 – 0.055 (0.001 – 0.002)	0.08 (0.003)
			EX	0.05 – 0.08 (0.002 – 0.003)	0.11 (0.004)
Valve seat	Width		IN	0.80 – 1.00 (0.031 – 0.039)	1.5 (0.059)
			EX	1.25 – 1.55 (0.049 – 0.061)	2.0 (0.079)
	Stem installed height		IN	41.55 – 42.35 (1.6358 – 1.6673)	42.435 (1.6707)
			EX	41.55 – 42.35 (1.6358 – 1.6673)	42.435 (1.6707)
Valve spring	Free length	M/T IN	Outer	43.23 (1.7020)*1	———
				43.24 (1.7024)*2	———
			Inner	39.79 (1.5665)*1	———
				39.82 (1.5677)*2	———
		EX		46.00 (1.8110)*1	———
				45.98 (1.8102)*2	———
		A/T IN		44.59 (1.7555)*1	———
				44.60 (1.7559)*2	———
		EX		47.40 (1.8661)*1	———
				47.43 (1.8673)*2	———
Valve guide	I.D.		IN and EX	5.51 – 5.53 (0.2169 – 0.2177)	5.53 (0.218)
	Installed height		IN and EX	13.75 – 14.25 (0.541 – 0.561)	———
Rocker arm	Arm-to-shaft clearance	Primary and Secondary	IN and EX	0.025 – 0.052 (0.0010 – 0.0020)	0.08 (0.003)
		Mid	IN and EX	0.024 – 0.053 (0.0009 – 0.0021)	0.08 (0.003)

*1: NIHON HATSUJO made, *2: CHUO HATSUJO made.
M/T: Manual Transmission A/T: Automatic Transmission

*3: Measured between the rocker arm and camshaft.

Unit of length: mm (in)

Engine Block — Section 7

	MEASUREMENT			STANDARD (NEW)	SERVICE LIMIT
Cylinder block	Warpage of deck surface			0.07 (0.003) max.	0.10 (0.004)
	Bore diameter	M/T	A or I	93.010 – 93.020 (3.6618 – 3.6622)	93.07 (3.664)
			B or II	93.000 – 93.010 (3.6614 – 3.6618)	93.07 (3.664)
		A/T	A or I	90.010 – 90.020 (3.5437 – 3.5441)	90.07 (3.546)
			B or II	90.000 – 90.010 (3.5433 – 3.5437)	90.07 (3.546)
	Bore taper			———	0.05 (0.002)
	Reboring limit (A/T)			———	0.5 (0.02)
Piston	Skirt O.D. [at 17 mm (0.67 in) from bottom of skirt]	M/T NO LETTER (A)		92.990 – 93.003 (3.6610 – 3.6615)	92.97 (3.6602)
			B	92.980 – 92.993 (3.6606 – 3.6611)	92.96 (3.6598)
		A/T NO LETTER (A)		89.986 – 90.004 (3.5427 – 3.5435)	89.97 (3.5421)
			B	89.976 – 89.994 (3.5424 – 3.5431)	89.96 (3.5417)
	Clearance in cylinder	M/T		0.007 – 0.030 (0.0002 – 0.0012)	0.0785 (0.0031)
		A/T		0.006 – 0.034 (0.0002 – 0.0014)	0.0825 (0.0032)
	Groove width (for ring)	M/T	Top	1.220 – 1.235 (0.0480 – 0.0486)	1.25 (0.0492)
			Second	1.220 – 1.235 (0.0480 – 0.0486)	1.25 (0.0492)
			Oil	2.505 – 2.525 (0.0986 – 0.0994)	2.54 (0.1000)
		A/T	Top	1.22 – 1.23 (0.0480 – 0.0484)	1.25 (0.0492)
			Second	1.22 – 1.23 (0.0480 – 0.0484)	1.25 (0.0492)
			Oil	2.805 – 2.820 (0.1104 – 0.1110)	2.84 (0.1118)
Connecting rod	End play installed on crankshaft			0.15 – 0.30 (0.006 – 0.012)	0.40 (0.016)
Piston ring	Ring-to-groove clearance	M/T	Top	0.035 – 0.065 (0.0014 – 0.0026)	0.13 (0.005)
			Second	0.030 – 0.060 (0.0012 – 0.0024)	0.13 (0.005)
		A/T	Top	0.030 – 0.055 (0.0012 – 0.0022)	0.13 (0.005)
			Second	0.030 – 0.055 (0.0012 – 0.0022)	0.13 (0.005)
	Ring end gap	Top	M/T	0.20 – 0.30 (0.008 – 0.012)	0.50 (0.020)
			A/T	0.25 – 0.40 (0.010 – 0.016)	0.60 (0.024)
		Second		0.35 – 0.50 (0.014 – 0.020)	0.75 (0.030)
		Oil		0.20 – 0.70 (0.008 – 0.028)	0.80 (0.031)
Crankshaft	Main journal diameter			63.976 – 64.000 (2.5187 – 2.5197)	———
	Journal taper			0.005 (0.0002) max.	0.010 (0.0004)
	Rod journal diameter			51.976 – 52.000 (2.0463 – 2.0472)	———
	Journal out-of-round			0.004 (0.0002) max.	0.006 (0.0002)
	End play			0.10 – 0.35 (0.004 – 0.014)	0.45 (0.018)
	Runout			0.015 (0.0006) max.	0.03 (0.001)
Bearings	Main bearing-to-journal oil clearance			0.024 – 0.048 (0.0009 – 0.0019)	0.050 (0.0020)
	Rod bearing-to-journal oil clearance			0.040 – 0.064 (0.0016 – 0.0025)	0.064 (0.0025)

Engine Lubrication — Section 8

	MEASUREMENT	STANDARD (NEW)	SERVICE LIMIT
Engine oil	Capacity ℓ (US qt, Imp qt)	6.3 (6.7, 5.5) for engine overhaul 5.0 (5.3, 4.4) for oil change, including filter	
Oil pump	Displacement ℓ (US qt, Imp qt)/min @ rpm	68 (72, 60) @ 6,000	
	Inner-to-outer rotor radial clearance	0.05 – 0.21 (0.002 – 0.008)	0.23 (0.009)
	Pump housing-to-outer rotor radial clearance	0.11 – 0.20 (0.004 – 0.008)	0.21 (0.008)
	Pump housing-to-outer rotor axial clearance	0.02 – 0.07 (0.001 – 0.003)	0.12 (0.005)
Relief valve	Pressure setting with oil temperature 176°F (80°C) kPa (kgf/cm², psi) at idle	70 (0.7, 10) min.	
	at 3,000 rpm	340 (3.5, 50) min.	

Standards and Service Limits

Cooling — Section 10

	MEASUREMENT	STANDARD (NEW)
Radiator	Engine coolant capacity ℓ (US qt, Imp qt) [including engine, heater, cooling line and expansion tank] Expansion tank capacity 2.1 ℓ (2.2 US qt, 1.8 Imp qt)	M/T: 16.0 (16.9, 14.1) for overhaul 12.0 (12.7, 10.6) for coolant change A/T: 16.5 (17.4, 14.5) for overhaul 12.0 (12.7, 10.6) for coolant change
Expansion tank cap	Opening pressure kPa (kgf/cm², psi)	93 – 123 (0.95 – 1.25, 14 – 18)
Thermostat	Start to open °F (°C) Fully open °F (°C) Valve lift at fully open	169 – 176 (76 – 80) 194 (90) 10 (0.39) min.
Water pump	Displacement ℓ (US qt, Imp qt)/min @ rpm	150 (159, 132) @ 6,000
Cooling fan	Thermoswitch "ON" temperature (low) °F (°C) Thermoswitch "OFF" temperature (low) °F (°C) Thermoswitch "ON" temperature (high) °F (°C) Thermoswitch "OFF" temperature (high) °F (°C)	183 ± 2 (84 ± 1.2) Subtract 11 ± 3 (6 ± 2) from the actual "ON" temperature (low) 194 ± 2 (90 ± 1.2) Subtract 11 ± 3 (6 ± 2) from the actual "ON" temperature (high)

M/T: Manual Transmission A/T: Automatic Transmission

Fuel and Emission — Section 11

	MEASUREMENT	STANDARD (NEW)
Pressure regulator	Pressure kPa (kgf/cm², psi)	320 – 360 (3.30 – 3.70, 47 – 53)
Fuel tank	Capacity ℓ (US gal, Imp gal)	70 (18.5, 15.4)
Engine	Fast idle rpm	MT: 1,200 – 1,600 AT: 1,050 – 1,450
	Idle speed rpm (with headlight and cooling fan off)	800 ± 50 (M/T: neutral) 780 ± 50 (A/T: N or P position)
	Idle CO % max.	0.1

Clutch — Section 12

	MEASUREMENT	STANDARD (NEW)	SERVICE LIMIT
Clutch pedal	Pedal height to floor Stroke Pedal play Disengagement height to floor	176.2 (6.94) 125 (4.92) 9 – 15 (0.35 – 0.59) 92 (3.62) min.	
Pressure plate	Warpage	0.03 (0.001) max.	0.15 (0.006)
Clutch disc	Thickness Rivet head depth	8.2 – 8.9 (0.32 – 0.35) 1.2 (0.05) min.	6.2 (0.24) 0.2 (0.01)
Flywheel	Clutch surface runout	0.05 (0.002) max.	0.15 (0.006)

Manual Transmission — Section 13

Unit of length: mm (in)

	MEASUREMENT	STANDARD (NEW)	SERVICE LIMIT
Transmission oil	Capacity ℓ (US qt, Imp qt)	2.90 (3.06, 2.55) for overhaul 2.65 (2.80, 2.33) for oil change	
Mainshaft	Diameter of ball bearing contact area (transmission housing side)	30.984 – 31.000 (1.2198 – 1.2205)	30.93 (1.2177)
	Diameter of needle bearing contact area	41.984 – 42.000 (1.6529 – 1.6535)	41.93 (1.6508)
	Diameter of ball bearing contact area (clutch housing side)	32.002 – 32.018 (1.260 – 1.261)	31.95 (1.2579)
	Runout	0.02 (0.001) max.	0.05 (0.002)
	End play	0.14 – 0.21 (0.006 – 0.008)	Adjust with a shim.
Mainshaft 3rd gear	I.D.	47.009 – 47.025 (1.8507 – 1.8514)	47.08 (1.8535)
	End play	0.06 – 0.19 (0.002 – 0.007)	0.3 (0.012)
	Thickness	30.39 – 30.47 (1.196 – 1.200)	30.30 (1.193)
Mainshaft 4th gear	I.D.	47.009 – 47.025 (1.8507 – 1.8514)	47.08 (1.8535)
	End play	0.06 – 0.19 (0.002 – 0.007)	0.3 (0.012)
	Thickness	26.39 – 26.47 (1.039 – 1.042)	26.30 (1.035)
Mainshaft 5th gear	I.D.	47.009 – 47.025 (1.8507 – 1.8514)	47.08 (1.8535)
	End play	0.06 – 0.24 (0.002 – 0.009)	0.3 (0.012)
	Thickness	32.89 – 32.97 (1.295 – 1.298)	32.80 (1.291)
Mainshaft 6th gear	I.D.	47.009 – 47.025 (1.8507 – 1.8514)	47.08 (1.8535)
	End play	0.06 – 0.24 (0.002 – 0.009)	0.3 (0.012)
	Thickness	28.39 – 28.47 (1.118 – 1.121)	28.30 (1.114)
Spacer collar (Mainshaft)	I.D.	36.002 – 36.012 (1.417 – 1.418)	36.06 (1.420)
	O.D. 4th gear side	41.989 – 42.000 (1.653 – 1.654)	41.94 (1.651)
	O.D. 5th gear side	41.989 – 42.000 (1.653 – 1.654)	41.94 (1.651)
	Length 4th gear side	26.53 – 26.58 (1.044 – 1.046)	26.51 (1.044)
	Length 5th gear side	26.53 – 26.58 (1.044 – 1.046)	26.51 (1.044)
Distance collar (Mainshaft)	I.D.	35.947 – 35.957 (1.4152 – 1.4156)	36.00 (1.417)
	O.D.	41.989 – 42.000 (1.6531 – 1.6535)	41.94 (1.651)
	Length 6th gear side	22.03 – 22.08 (0.867 – 0.869)	22.01 (0.867)
Countershaft	Diameter of needle bearing contact area (clutch housing side)	43.974 – 43.990 (1.7313 – 1.7319)	43.92 (1.7291)
	Diameter of needle and ball bearing contact area (transmission housing side)	33.984 – 34.000 (1.3380 – 1.3386)	33.93 (1.3358)
	Runout	0.02 (0.001) max.	0.05 (0.002)
Countershaft 1st gear	I.D.	57.010 – 57.029 (2.244 – 2.245)	57.08 (2.247)
	End play (when tightened by the specified torque)	0.04 – 0.10 (0.002 – 0.004)	Adjust with a washer.
Countershaft 2nd gear	I.D.	57.010 – 57.029 (2.244 – 2.245)	57.08 (2.247)
	End play (when tightened by the specified torque)	0.04 – 0.10 (0.002 – 0.004)	Adjust with a collar.
Countershaft reverse gear	Diameter of needle bearing contact area	51.987 – 52.000 (2.0467 – 2.0472)	51.93 (2.044)
Spacer collar (Countershaft)	I.D.	43.046 – 43.056 (1.6947 – 1.6951)	43.10 (1.697)
	O.D.	51.987 – 52.000 (2.0467 – 2.0472)	51.94 (2.045)
Reverse idler gear shaft	O.D.	19.989 – 20.000 (0.7870 – 0.7874)	19.93 (0.785)
Reverse driven gear and reverse drive gear	I.D.	25.007 – 25.020 (0.9845 – 0.9850)	25.07 (0.987)

(cont'd)

Standards and Service Limits

Manual Transmission (cont'd) — Section 13

	MEASUREMENT	STANDARD (NEW)	SERVICE LIMIT
Oil pump	Driven gear boss-to-transmission housing clearance	0.3 – 0.8 (0.012 – 0.031)	0.9 (0.035)
	Driven gear thickness	17.0 – 17.1 (0.669 – 0.673)	16.9 (0.665)
	Inner-to-outer rotor radial clearance	0.14 (0.006) max.	0.20 (0.008)
	Pump body-to-outer rotor radial clearance	0.1 – 0.2 (0.004 – 0.008)	0.22 (0.009)
	Pump body-to-outer rotor side clearance	0.03 – 0.10 (0.001 – 0.004)	0.15 (0.006)
Synchro ring	Ring-to-gear clearance (ring pushed against gear)	0.85 – 1.10 (0.033 – 0.043)	0.4 (0.016)
Dual cone synchro ring	Clearance (ring pushed against gear)		
	Outer synchro ring-to-gear	0.95 – 1.68 (0.037 – 0.066)	0.6 (0.024)
	Synchro cone-to-gear	0.5 – 1.0 (0.020 – 0.039)	0.3 (0.012)
	Outer synchro ring-to-synchro cone	0.5 – 1.0 (0.020 – 0.039)	0.3 (0.012)
Shift fork	Finger thickness 1st/2nd shift fork	8.9 – 9.0 (0.350 – 0.354)	———
	3rd/4th shift fork	7.4 – 7.5 (0.291 – 0.295)	———
	5th/6th shift fork	7.4 – 7.5 (0.291 – 0.295)	———
	Reverse shift fork	6.4 – 6.5 (0.252 – 0.256)	———
	Finger-to-synchro sleeve clearance	0.45 – 0.65 (0.018 – 0.026)	1.0 (0.039)
Reverse shift arm	Arm-to-reverse shift piece clearance	0.05 – 0.30 (0.002 – 0.012)	0.5 (0.02)
	Groove width	7.05 – 7.20 (0.278 – 0.283)	———
	Arm-to-reverse shift fork clearance	0.05 – 0.35 (0.002 – 0.014)	0.5 (0.02)
	Diameter (at the contact point with the reverse shift fork)	12.8 – 13.0 (0.504 – 0.512)	———
Shift arm	Arm-to-shift piece clearance	0.05 – 0.25 (0.002 – 0.010)	0.5 (0.02)
	Diameter (at the contact point with the shift piece)	12.9 – 13.0 (0.508 – 0.512)	———
Interlock	Interlock-to-select arm clearance	0.03 – 0.15 (0.001 – 0.006)	———
	Diameter (at the contact point with the select arm)	11.95 – 12.00 (0.470 – 0.472)	———
Shift piece	Shift piece-to-shift forks, 5th/6th shift piece and reverse shift piece clearance	0.2 – 0.5 (0.008 – 0.020)	0.6 (0.024)
	Diameter (at the contact point with the shift forks, 5th/6th shift piece and reverse shift piece)	11.9 – 12.0 (0.469 – 0.472)	———

Unit of length: mm (in)

Automatic Transmission — Section 14

	MEASUREMENT		STANDARD (NEW)	SERVICE LIMIT
Transmission fluid	Capacity ℓ (US qt, Imp qt)		7.0 (7.4, 6.2) for overhaul 2.9 (3.1, 2.6) for fluid change	
Hydraulic pressure kPa (kgf/cm², psi)	Line pressure at 2,000 rpm in D or 1 position		830 – 880 (8.5 – 9.0, 121 – 128)	785 (8.0, 114)
	1st clutch pressure at 2,000 rpm in D or 1 position			
	2nd clutch pressure at 2,000 rpm in D position		490 (5.0, 71) Fully closed throttle 880 (9.0, 128) throttle more than 3/16 opened	440 (4.5, 64) Fully closed throttle 785 (8.0, 114) throttle more than 3/16 opened
	3rd clutch pressure at 2,000 rpm in D position			
	4th clutch pressure at 2,000 rpm in D position			
	1st-hold clutch pressure at 2,000 rpm in 1 position		830 – 880 (8.5 – 9.0, 121 – 128)	785 (8.0, 114)
	2nd clutch pressure at 2,000 rpm in 2 position			
	4th clutch pressure at 2,000 rpm in R position			
	Throttle B pressure	Throttle fully closed	0 – 15 (0 – 0.15, 0 – 2)	0 – 15 (0 – 0.15, 0 – 2)
		Throttle fully opened	600 – 660 (6.1 – 6.7, 87 – 95)	600 – 660 (6.1 – 6.7, 87 – 95)
Stall speed rpm	Check with vehicle on level ground		2,100	1,950 – 2,250
Clutch	Clutch initial clearance	1st-hold	0.7 – 0.9 (0.028 – 0.035)	———
		1st	0.65 – 0.85 (0.026 – 0.033)	———
		2nd, 3rd, 4th	0.75 – 0.95 (0.030 – 0.037)	———
	Clutch return spring free length	1st	41.4 (1.630)	39.4 (1.551)
		2nd, 3rd, 4th	33.0 (1.299)	31.0 (1.220)
	Clutch disc thickness	1st-hold, 1st, 2nd, 3rd	1.88 – 2.00 (0.074 – 0.079)	Until grooves worn out
		4th	2.28 – 2.40 (0.090 – 0.094)	Until grooves worn out
	Clutch plate thickness	1st-hold, 1st	1.95 – 2.05 (0.077 – 0.081)	Discoloration
		2nd, 3rd, 4th	2.25 – 2.35 (0.089 – 0.093)	↕
	Clutch end plate thickness*	Mark 1	2.05 – 2.10 (0.081 – 0.083)	
		Mark 2	2.15 – 2.20 (0.085 – 0.087)	
		Mark 3	2.25 – 2.30 (0.089 – 0.091)	
		Mark 4	2.35 – 2.40 (0.093 – 0.094)	
		Mark 5	2.45 – 2.50 (0.096 – 0.098)	
		Mark 6	2.55 – 2.60 (0.100 – 0.102)	
		Mark 7	2.65 – 2.70 (0.104 – 0.106)	
		Mark 8	2.75 – 2.80 (0.108 – 0.110)	
		Mark 9	2.85 – 2.90 (0.112 – 0.114)	Discoloration
Valve body	Stator shaft needle bearing contact I.D. (torque converter side)		28.000 – 28.021 (1.102 – 1.103)	Wear or damage
	Stator shaft needle bearing contact I.D. (ATF pump side)		31.000 – 31.013 (1.220 – 1.221)	———
	ATF pump driven gear I.D.		14.016 – 14.034 (0.552 – 0.553)	Wear or damage
	ATF pump driven gear shaft O.D.		13.980 – 13.990 (0.550 – 0.551)	Wear or damage
	ATF pump gear side clearance		0.03 – 0.05 (0.001 – 0.002)	0.07 (0.003)
	ATF pump gear-to-body clearance	Drive	0.210 – 0.265 (0.008 – 0.010)	———
		Driven	0.070 – 0.125 (0.003 – 0.005)	———
Regulator valve body	Sealing ring contact I.D.		37.000 – 37.025 (1.457 – 1.458)	37.05 (1.459)

* Clutch end plate diameter: 1st: 116 mm (4.57 in)
1st-hold, 2nd, 3rd and 4th: 120 mm (4.72 in)

(cont'd)

Standards and Service Limits

Automatic Transmission (cont'd) — Section 14

	MEASUREMENT	STANDARD (NEW)	SERVICE LIMIT
2nd accumulator body	Searing ring contact I.D.	35.000 – 35.025 (1.378 – 1.379)	35.05 (1.380)
Shifting device and parking brake control	Reverse shift fork finger thickness	5.90 – 6.00 (0.232 – 0.236)	5.40 (0.213)
	Parking brake pawl	———	Wear or other defect
	Parking gear	———	Wear or other defect
Servo body	Shift fork shaft bore I.D.	14.000 – 14.005 (0.5512 – 0.5514)	———
		14.006 – 14.010 (0.5514 – 0.5516)	———
		14.011 – 14.015 (0.5516 – 0.5518)	———
	Shift fork shaft valve bore I.D.	37.000 – 37.039 (1.457 – 1.458)	37.045 (1.4459)
Transmission	Diameter of needle bearing contact area		
	On mainshaft and stator shaft	23.980 – 23.993 (0.944 – 0.945)	Wear or damage
	On mainshaft 4th gear collar	33.975 – 33.991 (1.3376 – 1.3382)	
	On mainshaft 1st gear collar	32.975 – 32.991 (1.298 – 1.299)	
	On countershaft (right side)	41.005 – 41.015 (1.614 – 1.615)	
	On countershaft 3rd gear collar	43.975 – 43.991 (1.731 – 1.732)	
	On countershaft 4th gear	34.975 – 34.991 (1.377 – 1.378)	
	On countershaft reverse gear collar	36.975 – 36.991 (1.4557 – 1.4563)	
	On countershaft 1st gear collar	33.975 – 33.991 (1.3376 – 1.3382)	
	On secondary shaft 2nd gear	36.975 – 36.991 (1.4557 – 1.4563)	
	On reverse idler gear shaft	13.990 – 14.000 (0.5508 – 0.5512)	Wear or damage
	Inside diameter		
	Mainshaft 1st gear	38.000 – 38.016 (1.496 – 1.497)	Wear or damage
	Mainshaft 4th gear	40.000 – 40.016 (1.5748 – 1.5754)	
	Countershaft 1st gear	40.000 – 40.016 (1.5748 – 1.5754)	
	Countershaft reverse gear	43.000 – 43.016 (1.693 – 1.694)	
	Countershaft 4th gear	41.000 – 41.016 (1.614 – 1615)	
	Countershaft 2nd gear	Involuted spline	
	Countershaft 3rd gear	52.000 – 52.019 (2.0472 – 2.0480)	
	Secondary shaft 2nd gear	43.000 – 43.016 (1.693 – 1.694)	
	Reverse idler gear	18.007 – 18.020 (0.7089 – 0.7094)	
	Reverse idler shaft holder	14.416 – 14.434 (0.5676 – 0.5683)	Wear or damage
	Mainshaft 1st gear collar length	35.00 – 35.05 (1.378 – 1.380)	———
	Mainshaft 1st gear collar flange thickness	2.95 – 3.10 (0.116 – 0.122)	Wear or damage
	Countershaft reverse gear collar length	16.00 – 16.05 (0.630 – 0.632)	———
	Countershaft reverse gear collar flange thickness	2.95 – 3.05 (0.116 – 0.120)	Wear or damage
	Diameter of countershaft one-way clutch contact area	88.869 – 88.895 (3.499 – 3.500)	Wear or damage
	Diameter of parking gear one-way clutch contact area	72.212 – 72.225 (2.8430 – 2.8435)	Wear or damage
	Mainshaft ATF feed pipe O.D.	11.47 – 11.48 (0.4516 – 0.4520)	11.45 (0.451)
	Mainshaft ATF feed pipe O.D.	5.97 – 5.98 (0.2350 – 0.2354)	5.95 (0.2343)
	Mainshaft sealing ring 37 mm thickness	1.980 – 1.995 (0.078 – 0.079)	1.80 (0.071)
	Mainshaft bushing I.D.	6.018 – 6.030 (0.2369 – 0.2374)	6.045 (0.238)
		11.500 – 11.518 (0.4528 – 0.4535)	11.35 (0.454)
	Countershaft ATF feed pipe O.D.	11.47 – 11.48 (0.4516 – 0.4520)	11.45 (0.451)
	Countershaft ATF feed pipe O.D.	7.97 – 7.98 (0.3138 – 0.3142)	7.95 (0.313)
	Countershaft bushing I.D.	8.000 – 8.015 (0.315 – 0.316)	8.03 (0.316)
		11.500 – 11.518 (0.4528 – 0.4535)	11.53 (0.454)
	Secondary shaft sealing ring 35 mm thickness	1.980 – 1.995 (0.078 – 0.079)	1.80 (0.071)
	Mainshaft sealing ring groove width	2.025 – 0.060 (0.080 – 0.081)	2.80 (0.082)
	Secondary shaft sealing ring groove width	2.025 – 0.060 (0.080 – 0.081)	2.80 (0.082)

Unit of length: mm (in)

Automatic Transmission — Section 14

	MEASUREMENT		STANDARD (NEW)	SERVICE LIMIT
Transmission (cont'd)	Selector hub O.D.		55.67 – 55.70 (2.192 – 2.193)	Wear or damage
	Thrust washer thickness			
	Mainshaft 4th gear right side		4.45 – 4.55 (0.175 – 0.179)	Wear or damage
	Mainshaft 4th gear left side		3.45 – 3.55 (0.136 – 0.140)	Wear or damage
	Mainshaft 1st gear right side		1.45 – 1.50 (0.057 – 0.059)	1.40 (0.055)
	Mainshaft 1st gear left side		2.43 – 2.50 (0.096 – 0.098)	Wear or damage
	Countershaft 3rd gear collar length	1	35.425 – 35.440 (1.3947 – 1.3953)	———
		2	35.440 – 35.455 (1.3953 – 1.3959)	———
		3	35.455 – 35.470 (1.3959 – 1.3965)	———
		4	35.470 – 35.485 (1.3965 – 1.3970)	———
		5	35.485 – 35.500 (1.3970 – 1.3976)	———
		6	35.500 – 35.515 (1.3976 – 1.3982)	———
	Countershaft 2nd gear spacer length		17.90 – 17.95 (0.705 – 0.707)	———
	Cotter thickness	1	1.975 – 2.000 (0.078 – 0.079)	———
		2	2.000 – 2.025 (0.079 – 0.080)	———
		3	2.025 – 2.050 (0.080 – 0.081)	———
		4	2.050 – 2.075 (0.081 – 0.082)	———
		5	2.075 – 2.100 (0.082 – 0.083)	———
		6	2.100 – 2.125 (0.083 – 0.084)	———
		7	2.125 – 2.150 (0.084 – 0.085)	———
		8	2.150 – 2.175 (0.085 – 0.086)	———
		9	2.175 – 2.200 (0.086 – 0.087)	———
		10	2.200 – 2.225 (0.087 – 0.088)	———
		11	2.225 – 2.250 (0.088 – 0.089)	———
		12	2.250 – 2.275 (0.089 – 0.090)	———
		13	2.275 – 2.300 (0.090 – 0.091)	———
		14	2.300 – 2.325 (0.091 – 0.092)	———
		15	2.325 – 2.350 (0.092 – 0.093)	———
		16	2.350 – 2.375 (0.093 – 0.094)	———
	Cotter retainer thickness	1	2.97 – 3.00 (0.117 – 0.118)	———
		2	3.00 – 3.03 (0.118 – 0.119)	———
		3	3.03 – 3.06 (0.119 – 0.120)	———
		4	3.06 – 3.09 (0.120 – 0.122)	———
		5	3.09 – 3.12 (0.122 – 0.123)	———
	Countershaft reverse gear thrust washer thickness		1.45 – 1.50 (0.057 – 0.059)	1.40 (0.055)
	Countershaft 1st gear collar length	1	62.50 – 62.55 (2.461 – 2.463)	———
		2	62.60 – 62.65 (2.465 – 2.467)	———
	Thrust washer thickness			
	Countershaft 1st gear left side		3.43 – 3.50 (0.135 – 0.138)	Wear or damage
	Secondary shaft 2nd gear		4.45 – 4.55 (0.175 – 0.179)	Wear or damage
	Secondary shaft spacer 31 mm length		33.00 – 33.05 (1.299 – 1.301)	———
	End play			
	Mainshaft 4th gear		0.10 – 0.22 (0.004 – 0.009)	———
	Mainshaft 1st gear		0.08 – 0.33 (0.003 – 0.013)	———
	Countershaft 3rd gear		0 – 0.03 (0 – 0.001)	Adjust with a 3rd gear collar or cotters
	Countershaft 2nd gear		0 – 0.05 (0 – 0.002)	
	Countershaft 4th gear		0.05 – 0.11 (0.002 – 0.004)	Adjust with a cotter retainer
	Countershaft reverse gear		0.10 – 0.25 (0.004 – 0.010)	———
	Countershaft 1st gear		0.20 – 0.31 (0.008 – 0.012)	Adjust with a 1st gear collar
	Secondary shaft 2nd gear		0.01 – 0.07 (0.0004 – 0.0028)	Adjust with a thrust washer
	Reverse idler gear		0.05 – 0.18 (0.002 – 0.007)	———
	Secondary shaft 2nd gear thrust washer depth "d"		0 (0)	———
			0 – 0.03 (0 – 0.001)	———
			0.03 – 0.06 (0.001 – 0.002)	———
			0.06 – 0.09 (0.002 – 0.004)	———
			0.09 – 0.12 (0.004 – 0.005)	———

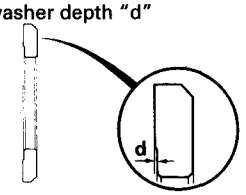

(cont'd)

Standards and Service Limits

Automatic Transmission (cont'd) — Section 14

	MEASUREMENT	STANDARD (NEW)			
		Wire Dia.	O.D.	Free Length	No. of Coils
Spring	Idle shaft spring A	0.7 (0.028)	5.7 (0.224)	14.6 (0.575)	7.0
	Servo detent spring	1.0 (0.039)	7.6 (0.299)	14.8 (0.538)	5.5
	Regulator valve spring A	1.58 x 2.0 (0.062 x 0.079)	14.7 (0.579)	88.6 (3.488)	20.9
	Regulator valve spring B	1.8 (0.071)	9.6 (0.378)	44.0 (1.732)	14.7
	Stator reaction spring	6.0 (0.236)	38.4 (1.512)	30.3 (1.193)	2.0
	Torque converter check valve spring	1.1 (0.043)	8.4 (0.331)	41.8 (1.646)	15.7
	Relief valve spring	1.1 (0.043)	8.4 (0.331)	44.4 (1.748)	19.5
	Cooler relief valve spring	1.2 (0.047)	8.4 (0.331)	35.7 (1.406)	16.5
	One-way relief valve spring	0.9 (0.035)	6.4 (0.252)	25.1 (0.988)	11.9
	LSD relief valve spring	0.8 (0.031)	8.4 (0.331)	37.3 (1.469)	12.1
	2nd orifice control valve spring	0.8 (0.031)	8.1 (0.319)	47.9 (1.886)	16.0
	3rd orifice control valve spring	0.9 (0.035)	8.6 (0.339)	48.3 (1.902)	16.6
	4th exhaust valve spring	0.6 (0.024)	7.6 (0.299)	24.4 (0.961)	7.9
	Throttle valve B spring A/B/C/D	0.9 (0.035)	7.1 (0.280)	29.0 (1.142)	12.6
	1-2 shift valve spring	0.9 (0.035)	8.6 (0.339)	40.4 (1.591)	14.5
	2-3 shift valve spring	0.8 (0.031)	7.0 (0.276)	43.7 (1.720)	21.2
	3-4 shift valve spring	0.8 (0.031)	7.0 (0.276)	43.7 (1.720)	21.2
	1st-hold accumulator spring	3.4 (0.134)	24.3 (0.957)	64.7 (2.547)	6.7
	1st accumulator spring	2.3 (0.091)	20.0 (0.787)	104.6 (4.118)	14.8
	4th accumulator spring	3.0 (0.118)	18.0 (0.709)	84.5 (3.327)	12.8
	2nd accumulator spring	3.3 (0.130)	20.2 (0.795)	78.0 (3.071)	11.8
	3rd accumulator spring	3.2 (0.126)	19.0 (0.748)	88.6 (3.488)	14.3
	Lock-up shift valve spring	1.0 (0.039)	8.6 (0.339)	51.3 (2.020)	19.8
	Lock-up timing valve B spring	0.8 (0.031)	5.6 (0.220)	27.8 (1.094)	16.4
	Lock-up control valve spring A/B/C	0.8 (0.031)	6.6 (0.260)	38.3 (1.508)	25.0
	Servo control valve spring	1.0 (0.039)	8.1 (0.319)	53.5 (2.106)	20.8
	Modulator valve spring A/B	1.4 (0.055)	9.4 (0.370)	33.0 (1.299)	10.5
	CPC valve spring A/B/C	1.0 (0.039)	6.8 (0.268)	32.1 (1.264)	15.6
	4-3 kick down valve spring	0.9 (0.035)	6.6 (0.260)	30.7 (1.209)	12.9
	3-2 kick down valve spring	1.0 (0.039)	6.1 (0.240)	27.1 (1.067)	13.4
	2nd exhaust valve spring	1.0 (0.039)	6.1 (0.240)	27.1 (1.067)	13.4

Standards and Service Limits

Differential (Manual Transmission) — Section 15

	MEASUREMENT	STANDARD (NEW)	SERVICE LIMIT
Differential carrier	Preset Torque N·m (kgf·m, lbf·ft) Assembly	60 – 140 (6 – 14, 43 – 101)	30 (3, 22)
	On-car	120 – 270 (12 – 28, 87 – 203)	60 (6, 43)
Tapered roller bearing	Preload N·m (kgf·cm, lbf·in)	2.0 – 2.9 (20 – 30, 17 – 26)	Adjust with a shim
Clutch disc	Thickness	1.68 – 1.80 (0.066 – 0.071)	0.25 (0.01)
Clutch plate	Thickness	2.55 – 2.65 (0.100 – 0.104)	———
Central gear end play		0.18 – 0.32 (0.007 – 0.013)	Adjust with a shim

Differential (Automatic Transmission) — Section 15

	MEASUREMENT	STANDARD (NEW)	SERVICE LIMIT
Differential carrier	Preset Torque N·m (kgf·m, lbf·ft)	60 – 140 (6 – 14, 43 – 101)	30 (3, 22)
Tapered roller bearing	Preload N·m (kgf·cm, lbf·in)	3.2 – 4.4 (33 – 45, 29 – 39)	Adjust with a shim
Clutch disc	Thickness	1.68 – 1.80 (0.066 – 0.071)	0.25 (0.01)
Clutch plate	Thickness	2.55 – 2.65 (0.100 – 0.104)	———
Distance between final driven gear and 112 mm thrust shim		41.7 – 41.9 (1.64 – 1.65)	Adjust with a shim

Unit of length: mm (in)

Steering — Section 17

	MEASUREMENT	STANDARD (NEW)
Steering wheel	Play	5.0 (0.2) max.
	Starting force N (kgf, lbf) With engine stopped	120 (12, 26) max. Wheels on the ground
	With engine running	41 (4.2, 9.3) max.
Gearbox	Angle of rack guide screw loosened from locked position	20° $^{+5°}_{+0}$
	Pinion starting preload N (kgf, lbf)	30 (3, 6.6)

Suspension — Section 18

	MEASUREMENT			STANDARD (NEW)	SERVICE LIMIT
Wheel alignment	Camber	Front	at inspection	−0°20′ ± 30′	———
			at adjustment	−0°20′ ± 10′	———
		Rear	at inspection	−1°30′ ± 30′	———
			at adjustment	−1°30′ ± 10′	———
	Caster	Front	at inspection	+8°00′ ± 45′	———
			at adjustment	+8°00′ ± 15′	———
	Total toe	Front		Out 3.5 ± 1.0 (0.14 ± 0.04)	———
		Rear		In 4.0 ± 1.0 (0.16 ± 0.04)	———
	Front wheel turning angle		Inward wheel	33°06′ ± 2°	———
			Outward wheel	26°34′	———
	Side slip	Front		Out 6.0 ± 2.0 (0.24 ± 0.08)	———
		Rear		In 6.0 ± 2.0 (0.24 ± 0.08)	———
Wheel	Rim runout		Axial	0 – 0.7 (0 – 0.03)	———
			Radial	0 – 0.7 (0 – 0.03)	———
Wheel bearing	End Play		Front	0	0.05 (0.002)
			Rear	0	0.05 (0.002)

Brakes — Section 19

	MEASUREMENT		STANDARD (NEW)	SERVICE LIMIT
Parking brake lever	Play in stroke 196 N (20 kgf, 44 lbf)		To be locked when pulled 10 – 14 notches	———
Foot brake pedal	Pedal height (with floor mat removed)	M/T	218 (8 9/16)	———
		A/T	218 (8 9/16)	———
Master cylinder	Piston-to-pushrod clearance		0 – 0.4 (0 – 0.02)	———
Disc brake	Disc thickness	Front	28.0 (1.10)	26.0(1.02)
		Rear	23.0 (0.91)	21.0 (0.83)
	Disc runout	Front	———	0.10 (0.004)
		Rear	———	0.10 (0.004)
	Disc parallelism	Front and rear	———	0.015 (0.0006)
	Pad thickness	Front	11.0 (0.43)	1.6 (0.06)
		Rear	9.5 (0.37)	1.6 (0.06)

M/T: Manual Transmission A/T: Automatic Transmission

Standards and Service Limits

Air Conditioning — Section 22

	MEASUREMENT	STANDARD (NEW)
Air conditioning system	Lubricant type: DENSO: ND-OIL 8 (P/N 38897 – PR7 – A01AH or 38899 – PR7 – A01) Lubricant capacity mℓ (fl oz, Imp oz) Condenser Evaporator Line or hose Reservoir	 10 (1/3, 0.4) 10 (1/3, 0.4) 20 (2/3, 0.7) 10 (1/3, 0.4)
Compressor (DENSO)	Lubricant type: ND-OIL 8 (P/N 38897 – PR7 – A01AH or 38899 – PR7 – A01) Lubricant capacity mℓ (fl oz, Imp oz) Field coil resistance at 68°F (20°C) Ω Pulley-to-pressure plate clearance	 160 (5 1/3, 5.6) 3.4 – 3.8 0.35 – 0.65 (0.014 – 0.026)
Compressor belt*1	Deflection with 98 N (10 kgf, 22 lbf) between pulleys	10 – 12 (0.39 – 0.47) with used belt 5.5 – 7.5 (0.22 – 0.30) with new belt
	Belt tension N (kgf, lbf) Measured with belt tension gauge	340 – 540 (35 – 55, 77 – 120) with used belt 690 – 880 (70 – 90, 150 – 200) with new belt

Electrical — Section 23

	MEASUREMENT	STANDARD (NEW)	SERVICE LIMIT
Ignition coil	Rated voltage V Primary winding resistance at 77°F (25°C) Ω	12 0.9 – 1.1	
Spark Plug	Type Gap	See section 23 1.1 $^{+0}_{-0.1}$ (0.043 $^{+0}_{-0.004}$)	 1.3 (0.051)*2
Ignition timing	At idling	15° ± 2° (Red) BTDC	
Firing order		1 – 4 – 2 – 5 – 3 – 6	
Alternator belt*1	Deflection with 98 N (10 kgf, 22 lbf) between pulleys	12 – 47 (0.14 – 0.55) with used belt 7 – 9 (0.28 – 0.35) with new belt	
	Belt tension N (kgf, lbf) Measured with belt tension gauge	440 – 640 (45 – 65, 99 – 143) with used belt 880 – 1,080 (90 – 110, 198 – 243) with new belt	
Alternator	Output 13.5 V at normal operating Temperature A @ 6,000 rpm Brush length	 120 10.5 (0.41)	 112 3.5 (0.14)
Starting motor	Type/Output kW Mica depth Commutator runout Commutator O.D. Brush length Brush spring tension N (kgf, lbf)	Reduction/1.4 0.5 – 0.8 (0.02 – 0.03) 0 – 0.02 (0 – 0.0008) 29.9 – 30.0 (1.177 – 1.181) 15.0 – 15.5 (0.591 – 0.610) 17.7 – 23.5 (1.80 – 2.40, 4.0 – 5.3)	——— 0.2 (0.008) 0.05 (0.002) 29.0 (1.142) 10.0 (0.394) ———

*1: When using a new belt, adjust deflection or tension to new values. Run the engine for 5 minutes then turn it off. Readjust deflection or tension to used belt values.

*2: Do not adjust the gap, replace spark plug if it is out of specification.

Design Specifications

	ITEM		METRIC	ENGLISH	NOTES
Dimensions	Overall Length		4,425 mm	174.2 in	
	Overall Width		1,810 mm	71.3 in	
	Overall Height		1,175 mm	46.3 in	
	Wheelbase		2,530 mm	99.6 in	
	Track F/R		1,510/1,530 mm	59.4/60.2 in	
	Ground Clearance		135 mm	5.3 in	
	Seating Capacity		2		
Weight (USA)	Gross Vehicle Weight Rating (GVWR)		NSX: 1,610 kg	3,550 lbs	
Weight (CANADA)	Gross Vehicle Weight Rating (GVWR)		NSX-T: M/T 1,630 kg	3,593 lbs	
			A/T 1,655 kg	3,649 lbs	
ENGINE	Type		Water cooled, 4-stroke DOHC VTEC gasoline engine		
	Cylinder Arrangement		90° V6-cylinder, transverse		
	Bore and Stroke	C32B1 engine	93.0 x 78.0 mm	3.66 x 3.07 in	
		C30A1 engine	90.0 x 78.0 mm	3.54 x 3.07 in	
	Displacement	C32B1 engine	3,179 cm^3 (cc)	194 cu in	
		C30A1 engine	2,977 cm^3 (cc)	182 cu in	
	Compression Ratio		10.2		
	Valve Train		Belt driven DOHC		
	Lubrication System		Forced and wet sump		
	Fuel Required		Premium UNLEADED grade gasoline with 91 Pump Octane Number or higher		
STARTER	Type/Make		Gear reduction/DENSO		
	Normal Output		1.6 kW		
	Nominal Voltage		12 V		
	Hour Rating		30 seconds		
	Direction of Rotation		Counterclockwise as viewed from gear end		
	Weight		4.75 kg	10.47 lbs	
CLUTCH	Clutch	M/T	Single plate dry, diaphragm spring		
		A/T	Torque converter		
	Clutch Lining Area	M/T	239 cm^2	37.0 sq in	
TRANSMISSION	Transmission	M/T	Synchronized 6 speed forward 1 reverse		
		A/T	Electronically controlled 4-speed forward automatic; 1 reverse		
	Primary Reduction		Direct 1 : 1		
	Type		Manual	Automatic	
	Gear Ratio	1st	3..066	2.611	
		2nd	1.956	1.551	
		3rd	1.428	1.025	
		4th	1.125	0.684	
		5th	0.914	—	
		6th	0.717	—	
		Reverse	3.186	1.909	
	Final Reduction	Gear type	Single helical gear		
		Gear ratio	4.062	4.428	

(cont'd)

Design Specifications

(cont'd)

	ITEM		METRIC	ENGLISH	NOTES
AIR CONDITIONING	Cooling Capacity		4,000 Kcal/h	15,872 BTU/h	
	— Conditions:				
	Compressor RPM		1,800 rpm		
	Outside Air Temperature		27°C	81°F	
	Outside Air Humidity		50%		
	Condenser Air Temperature		35°C	95°F	
	Condenser Air Velocity		4.5 m/sec	14.8 ft/sec	
	Blower Capacity		420 m³/h	15,540 cu-ft/h	at 12 V
	Compressor	Type/Make	Swash-plate type/DENSO		
		No. of Cylinders	10		
		Capacity	155.3 cc/rev	9.47 cu-in/rev	
		Max. speed	7,600 rpm		
		Lubricant Capacity	160 mℓ	5 1/3 fl oz, 5.6 Imp oz	
	Condenser	Type	Corrugated fin type		
	Evaporator	Type	Corrugated fin type		
		Air Temperature	19.5°C	67°F	
	Blower	Type	Sirocco fan		
		Motor Input	178 W/12 V		
		Speed Control	Infinity variable		
		Max. Capacity	460 m³/h	16,247 cu-ft/h	at 13.5 V
	Temp. control		Air-mix type		
	Compressor clutch	Type	Dry, single plate, poly-V-belt drive		
		Power Consumption	40 W/12 V		
	Refrigerant	Type	HFC-134a (R-134a)		
		Quantity	850 $^{+0}_{-50}$ g	30.0 $^{+0}_{-1.8}$ oz	
STEERING SYSTEM	Type		Electric, power assisted, rack and pinion		
	Overall Ratio		18.6 (Power steering)		
	Turns, Lock-to-Lock		3.24		
	Steering Wheel Dia.		368 mm	14.5 in	
SUSPENSION	Type, Front		Independent double wishbone with compliance pivot, coil spring with stabilizer		
	Type, Rear		Independent double wishbone, coil spring with stabilizer		
	Shock Absorber, Front and Rear		Telescopic, hydraulic nitrogen gas-filled		

	ITEM	METRIC	ENGLISH	NOTES
WHEEL ALIGNMENT	Camber Front	−0°20′		
	Rear	−1°30′		
	Caster	8°		
	Toe Front	Out 3.5 mm	Out 0.14 in	
	Rear	In 4.0 mm	In 0.16 in	
BRAKE SYSTEM	Type, Front and Rear	Power assisted self-adjusting ventilated disc		
	Pad and Lining Surface Area: Front/Rear	58.0/38.8 cm^2	8.99/6.01 sq in	
	Parking Brake Kind and Type	Mechanical expanding, rear two wheel brakes		
TIRE	Size	Front: 215/45 ZR Ib Rear: 245/40 ZR 17 165/80 D 16 (Folding spare tire)		
ELECTRICAL	Battery	M/T: 12 V – 52AH/5HR A/T: 12 V – 55AH/5HR		
	Starter	12 V – 1.4 kW		
	Alternator	12 V – 120 A		
	Fuses			
	In the Under-dash Fuse Box			
	In the Under-hood Fuse/Relay Box	7.5 A, 10 A, 15 A		
	In the Engine Compartment	7.5 A, 10 A, 15 A, 20 A, 30 A, 40 A, 50 A		
	Fuse/Relay Box	10 A, 20 A, 30 A, 40 A, 120 A		
	Headlights, High, Low	12 V – 65 W, 55 W		
	Front Turn Signal Lights	12 V – 45 CP		
	Front Parking Lights	12 V – 5 W		
	Rear Turn Signal Lights	12 V – 45 CP		
	Brake/Tailights	12 V – 32/2 CP		
	Tailights	12 V – 2 CP		
	Front Side Marker Lights	12 V – 3 CP		
	Rear Side Marker Lights	12 V – 3 CP		
	Back-up Lights	12 V – 32 CP		
	License Plate Lights	12 V – 8 W		
	Gauge Lights	12 V – 3.0 W, 1.4 W		
	Indicater Lights	12 V – 1.4 W, 1.96 W		
	Glove Box and Fuse Lights	12 V – 3.4 W		
	Ceiling Lights	12 V – 5 W		NSX
		12 V – 8 W		NSX-T
	Trunk Lights	12 V – 3.4 W		
	Door Courtesy Lights	12 V – 3.4 W		
	Footwell Light	12 V – 5 W		
	Illumination and Indicator Lights	12 V – 1.4 W, 0.84 W		
		12 V – 0.91 W, LED		
	Daytime Running Lights	12 V – 32 CP		Canada model only
	High Mount Brake Light	LED		

Body Specifications

Unit: mm (in)

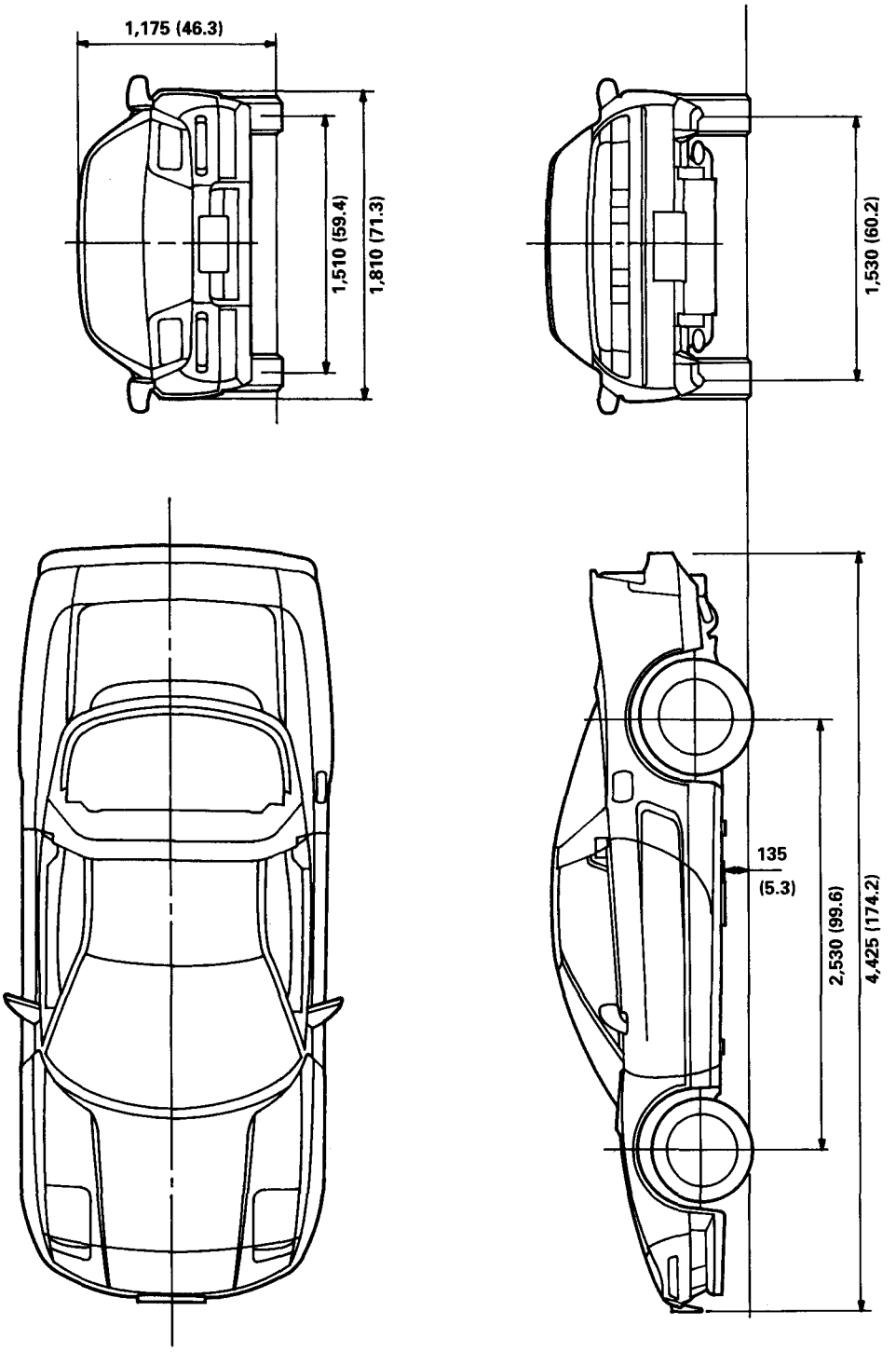

Maintenance

Lubrication points
- ’97 Model 4–2
- ’98–99 Models 4–2a
- ’00 Model 4–2c
- ’01 Model 4–2d
- ’02–03 Models 4–2e
- ’04 Model 4–2g
- ’05 Model 4–2h

Maintenance Schedule
- **Normal Conditions**
  - ’97 Model 4–4
  - ’98–99 Models 4–4a
  - ’00 Model 4–4c
  - ’01 Model 4–4d
  - ’02–03 Models 4–4e
  - ’04 Model 4–4g
  - ’05 Model 4–4h
- **Severe Conditions**
  - ’97 Model 4–6
  - ’98–99 Models 4–6a
  - ’00 Model 4–6c
  - ’01 Model 4–6d
  - ’02–03 Models 4–6e
  - ’04 Model 4–6g
  - ’05 Model 4–7h

Lubrication Points

For the details of lubrication points and types of lubricants to be applied, refer to the illustrated index and various work procedures (such as Assembly/Reassembly, Replacement, Overhaul, Installation, etc.) contained in each section.

No.	LUBRICATION POINTS		LUBRICANT
1	Engine		API Service Grade: Use SJ "Energy Conserving" or SH "Energy Conserving II" grade oil. The oil container may also display the API Certification seal shown below. Make sure it says "For Gasoline Engines." SAE Viscosity: See chart below.
2	Transmission	Manual	Genuine Honda MTF*1
		Automatic	Genuine Honda Premium Formula Automatic Transmission Fluid (ATF)*2
3	Brake Line (including anti-lock brake system)		Genuine Honda DOT3 Brake Fluid*3
4	Clutch Line		Genuine Honda DOT3 Brake Fluid*3
5	Shift lever pivots (M/T)		Grease with molybdenum disulfide
6	Release fork (M/T)		Super High Temp Urea Grease (P/N 08798 – 9002)
7	Steering gearbox		Steering grease P/N 08733 – B070E
8 9 10 11 12 13 14 15 16 17 18 19 20 21 22 23	Steering boots Steering ball joints Select lever (A/T) Pedal linkage Intermediate shaft Brake master power pushrod Door hinges upper and lower Door opening detents Fuel lid Hood hinges and lock Clutch master cylinder pushrod Tilt lever Parking brake cable end Throttle cable end Rear hatch latch Retractable headlight pin contact area		Multi-purpose grease
24 25	Shift cable end and select cable end Caliper Piston seal, Dust seal, Caliper pin, Piston		Silicone grease
26	Air conditioning compressor		Compressor oil: DENSO: ND-OIL8 (P/N 38897 – PR7 – A01AH or 38899 – PR7 – A01) (For Refrigerant: HFC-134a (R-134a))

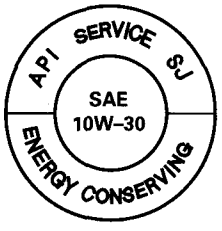

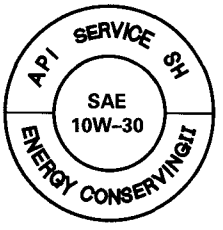

API SERVICE LABEL



API CERTIFICATION SEAL

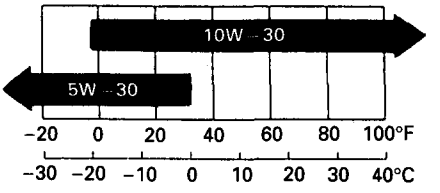

Recommended engine oil
Engine oil viscosity for ambient temperature ranges

*1: Always use Genuine Honda Manual Transmission Fluid (MTF). Using motor oil can cause stiffer shifting because it does not contain the proper additives.

*2: Always use Genuine Honda Premium Formula Automatic Transmission Fluid (ATF). Using a non-Honda ATF can affect shift quality.

*3: Always use Genuine Honda DOT3 Brake Fluid. Using a non-Honda brake fluid can cause corrosion and decrease the life of the system.

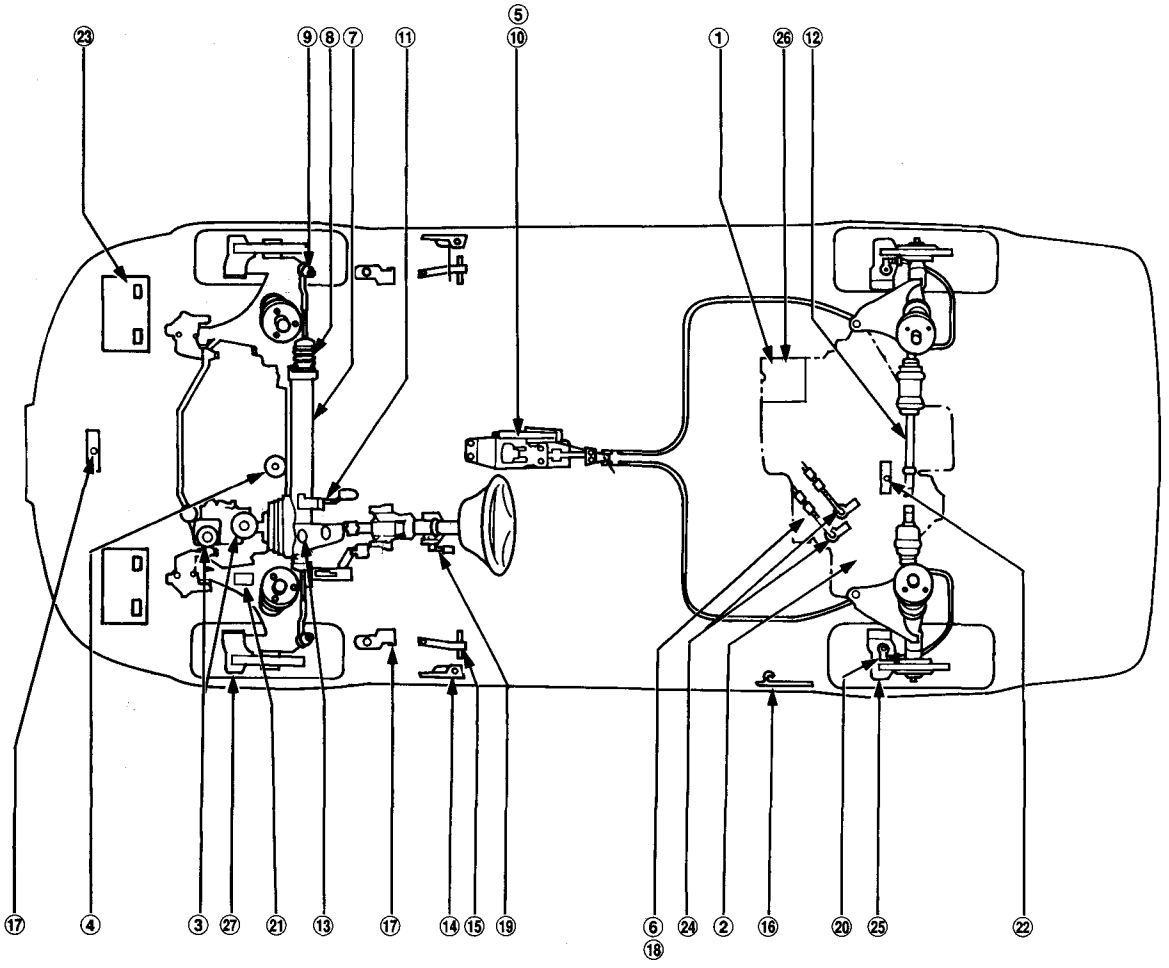
⑤
⑩
㉓
⑨
⑧
⑦
⑪
①
㉖
⑫
⑰
④
③
㉗
㉑
⑬
⑰
⑭
⑮
⑲
⑥
⑱
㉔
②
⑯
⑳
㉕
㉒

Follow the Normal Conditions Maintenance Schedule if the severe driving conditions specified in the Severe Conditions Maintenance Schedule on pages 4-6 and 4-7 do not apply.

Service at the indicated distance or time whichever comes first.										NOTE	SECTION and PAGE
	miles x 1,000	15	30	45	60	75	90	105	120		
	km x 1,000	24	48	72	96	120	144	168	192		
	months	12	24	36	48	60	72	84	96		
Replace engine oil		Replace every 7,500 miles (12,000 km) or 12 months								Capacity for change with filter: 5.0 ℓ (5.3 US qt, 4.4 Imp qt)	8-4
Replace engine oil filter		●	●	●	●	●	●	●	●		8-5
Check engine oil and coolant		Check oil and coolant at each fuel stop								Check levels and check for leaks.	8-4, 10-2
Replace air cleaner element			●		●		●		●		11-149
Inspect valve clearance			●				●			Intake: 0.15 – 0.19 mm (0.006 – 0.007 in) Exhaust: 0.17 – 0.21 mm (0.007 – 0.008 in) Measured when cold	6-10
Replace spark plugs								●		NGK: PFR6L-11 DENSO: PK20PR-L11 Gap: 1.0 – 1.1 mm (0.039 – 0.043 in)	23-96
Replace timing belt and inspect water pump								●			6-14, 10-11
Inspect and adjust drive belts			●		●		●		●	Check for cracks and damage. Check deflection and tension at center of following belts pressing with 98 N (10 kgf, 22 lbf) tension: Alternator drive belt: 11.0 – 13.5 mm (0.43 – 0.53 in) A/C compressor belt: 10 – 12 mm (0.39 – 0.47 in)	22-88 23-109
Replace fuel filter*					●				●		11-138
Inspect idle speed								●		800 ± 50 rpm (M/T: neutral) 780 ± 50 rpm (A/T: N or P position)	11-129
Replace engine coolant				●		●		●		Capacity for change: 12.0 ℓ (12.7 US qt, 10.6 Imp qt) Check specific gravity for freezing point.	10-5
Replace transmission fluid							●			Manual transmission: Genuine Honda MTF 2.65 ℓ (2.80 US qt, 2.33 Imp qt) for change Automatic transmission: 2.9 ℓ (3.1 US qt, 2.6 Imp qt) for change with Genuine Honda Premium Formula ATF	13-3 14-105
Inspect front and rear brakes		●	●	●	●	●	●	●	●	• Check the brake pad disc thickness and free movement. • Check the calipers for leakage.	19-4, 19-6, 19-7, 19-10, 19-11, 19-17, 19-18, 19-20, 19-21
Replace brake fluid (Including ABS)				●			●			Use Genuine Honda DOT3 brake fluid. Check that brake fluid level is between the upper and lower marks on the reservoir.	19-11
Check parking brake adjustment		●	●	●	●	●	●	●	●	Fully engaged 10 to 14 notches.	19-5
Rotate tires (Check tire inflation and condition at least once per month)		Rotate tires every 7,500 miles (12,000 km)								The suggested rotation method is shown in the diagram of the Owner's Manual.	———

Service at the indicated distance or time whichever comes first.										NOTE	SECTION and PAGE
	miles x 1,000	15	30	45	60	75	90	105	120		
	km x 1,000	24	48	72	96	120	144	168	192		
	months	12	24	36	48	60	72	84	96		
Visually inspect the following items:											
Tie-rod ends, steering gear box, and boots		●	●	●	●	●	●	●	●	Check steering linkage for looseness. Check condition of boots. Check for fluid leaks.	17-57
Suspension components										Check the bolts for lightness. Check the condition of ball joint boots.	———
Driveshaft boots										Check condition of boots.	16-7
Brake hoses and lines (including ABS)										Check for damage or leakage.	19-4, 19-27
All fluid levels and condition of fluid										Check levels, condition of fluids, and check for leaks. If brake fluid is low, check brake pad thickness.	10-2, 13-3, 14-105 19-84
Cooling system hoses and connections										Check all hoses for damage, leaks, and deterioration. Check for proper fan operation.	10-2
Exhaust system*										Check the catalytic converter heat shield, exhaust pipe, and muffler for damage, leaks, and lightness.	9-6, 9-7 11-159
Fuel lines and connections*										Check for leaks. Retighten loose connections and replace any damaged parts.	11-130
Inspect supplemental restraint system		10 years after production									———

According to state and federal regulations, failure to perform maintenance on the items marked with an asterisk (*) will not void customer's emission warranties. However, Honda recommends that all maintenance services be performed at the recommended time or mileage period to ensure long-term reliability.

For 1997 Canada model: Follow the Severe Conditions Maintenance Schedule for 1997 Model on page 4-6 and 4-7.

Follow the Severe Conditions Maintenance Schedule if the vehicle is driven MAINLY under one or more of the Severe Driving Conditions (page 4-7):

Service at the indicated distance or time whichever comes first.										NOTE	SECTION and PAGE
	miles x 1,000	15	30	45	60	75	90	105	120		
	km x 1,000	24	48	72	96	120	144	168	192		
	months	12	24	36	48	60	72	84	96		
Replace engine oil and oil filter		Replace every 3,750 miles (6,000 km) or 6 months								Capacity for change with filter: 5.0 ℓ (5.3 US qt, 4.4 Imp qt)	8-4
Check engine oil and coolant		Check oil and coolant at each fuel stop								Check levels and check for leaks.	8-4, 10-2
Clean (○) or replace(●) air cleaner element Use normal schedule except in dusty conditions		Clean: every 7,500 miles (12,000 km) or 6 months Replace: every 30,000 miles (48,000 km) or 24 months									11-149
Inspect valve clearance			●				●			Intake: 0.15 – 0.19 mm (0.006 – 0.007 in) Exhaust: 0.17 – 0.21 mm (0.007 – 0.008 in) Measured when cold	6-10
Replace spark plugs								●		NGK: PFR6L-11 DENSO: PK20PR-L11 Gap: 1.0 – 1.1 mm (0.039 – 0.043 in)	23-96
Replace timing belt*1 and inspect water pump								●			6-14, 10-11
Inspect and adjust drive belts			●		●		●		●	Check for cracks and damage. Check deflection and tension at center of following belts *pressing with 98 N (10 kgf, 22 lbf) tension:* Alternator drive belt: 11.0 – 13.5 mm (0.43 – 0.53 in) A/C compressor belt: 10 – 12 mm (0.39 – 0.47 in)	22-88 23-109
Replace fuel filter*					●				●		11-138
Inspect idle speed								●		800 ± 50 rpm (M/T: neutral) 780 ± 50 rpm (A/T: N or P position)	11-129
Replace engine coolant				●		●		●		Capacity for change: 12.0 ℓ (12.7 US qt, 10.6 Imp qt) Check specific gravity for freezing point.	10-5
Replace transmission fluid			●		●		●		●	Manual transmission: Genuine Honda MTF 2.65 ℓ (2.80 US qt, 2.33 Imp qt) for change Automatic transmission: 2.9 ℓ (3.1 US qt, 2.6 Imp qt) for change with Genuine Honda Premium Formula ATF	13-3 14-105
Inspect front and rear brakes		Inspect every 7,500 miles (12,000 km) or 6 months								• Check the brake pad and disc thickness and free movement. • Check the calipers for leak.	19-4, 19-6, 19-7, 19-10, 19-11, 19-17 19-18, 19-20, 19-21
Replace brake fluid (Including ABS)				●			●			Use Genuine Honda DOT3 brake fluid. Check that brake fluid level is between the upper and lower marks on the reservoir.	19-11
Check parking brake adjustment		●	●	●	●	●	●	●	●	Fully engaged 10 to 14 clicks.	19-5

*1: Replace the timing belt at 60,000 miles (U.S.) 100,000 km (Canada) if the vehicle regularly is driven in one or more of these conditions:
- In very high temperatures (over 110°F, 43°C).
- In very low temperatures (under – 20°F, – 29°C).

Service at the indicated distance or time whichever comes first.										NOTE	SECTION and PAGE
	miles x 1,000	15	30	45	60	75	90	105	120		
	km x 1,000	24	48	72	96	120	144	168	192		
	months	12	24	36	48	60	72	84	96		
Lubricate locks and hinges		●	●	●	●	●	●	●	●		4-2, 4-3
Clean antenna mast		●	●	●	●	●	●	●	●		23-244
Rotate tires (check tire inflation and condition at least once per month)		Rotate tires every 7,500 miles (12,000 km)								The suggested rotation method is shown in the diagram of the Owner's Manual.	———
Visually inspect the following items:										• Check for correct installation and position, check for cracks, deterioration, rust, and leaks. • Check tightness of screws, nuts, and joints. If necessary, retighten.	———
Tie-rod ends, steering gear box, and boots		Every 7,500 miles (12,000 km) or 6 months								Check steering linkage for looseness. Check condition of boots. Check for fluid leaks.	17-57
Suspension components										Check the bolts for tightness. Check the condition of ball joint boots.	———
Driveshaft boots										Check condition of boots.	16-7
Brake hoses and lines (including ABS)										Check for damage or leakage.	19-4, 19-27
All fluid levels and condition of fluid										Check levels, condition of fluids, and check for leaks. If brake fluid is low, check brake pad thickness.	10-2, 13-3, 14-105 19-84
Cooling system hoses and connections										Check all hoses for damage, leaks, and deterioration. Check for proper fan operation.	10-2
Exhaust system*		●	●	●	●	●	●	●	●	Check the catalytic converter heat shield, exhaust pipe, and muffler for damage, leaks, and tightness.	9-6, 9-7 11-159
Fuel lines and connections*										Check for leaks. Retighten loose connections and replace any damaged parts.	11-130
Lights and controls										Check all lighting functions.	———
Vehicle underbody										Check for damage and fluid leaks.	———
Inspect supplemental restraint system		10 years after production									———

According to state and federal regulations, failure to perform maintenance on the items marked with an asterisk (*) will not void customer's emission warranties. However, Honda recommends that all maintenance services be performed at the recommended time or mileage period to ensure long-term reliability.

Severe Driving Conditions:

- Driving less than 5 miles (8 km) per trip or, in freezing temperatures, driving less than 10 miles (16 km) per trip.
- Driving in extremely hot [over 90°F (32°C)] conditions.
- Extensive idling or long periods of stop-and-go driving.
- Trailer towing, driving with a car-top carrier, or driving in mountainous conditions.
- Driving on muddy, dusty, or de-iced roads.

NOTE: If the car is driven OCCASIONALLY under a "severe" condition, you should follow the Normal Conditions Maintenance Schedule for 1997 Model on pages 4-4 and 4-5.

Engine

Engine Removal/Installation **5–1**
Cylinder Head/Valve Train **6–1**
Engine Block **7–1**
Engine Lubrication **8–1**
Intake Manifold/Exhaust System **9–1**
Cooling **10–1**

Engine Removal/Installation

Special Tools **5–2**
Engine
- **Removal** **5–3**
- **Installation** **5–12**

Special Tools

Ref. No.	Tool Number	Description	Qty	Page Reference
①	07MAK – PR7020A	Engine Removal/Installation Fixture	1	5-9
②	07MAZ – SL0000A	NSX Fender Cover	1	5-3

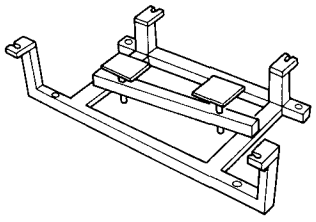

①



②

Engine Removal/Installation

Removal

⚠ WARNING

- **Make sure jacks and safety stands are placed properly and hoist brackets are attached to the correct positions on the engine (see section 1).**
- **Make sure the car will not roll off stands and fall while you are working under it.**

CAUTION:

- **Use a fender cover (special tool) to avoid damaging painted surfaces.**
- **Unspecified items are common.**
- **Unplug the wiring connectors carefully while holding the connector portion to avoid damage.**
- **Mark all wiring and hoses to avoid misconnection. Also, be sure that they do not contact other wiring or hoses or interfere with other parts.**
- **If the ground clearance needs to be increased, use a scissors jack and install rubber spacers in the coil springs (see section 1).**
- **Put rubber pads under the jacking points when using jacks or safety stands to avoid damaging the body (see section 1).**

1. Move the seat bottoms and backs as far forward as they will go.

2. Remove the rear hatch assembly and engine cover (see section 20).

3. Disconnect the battery negative terminal first, then the positive terminal.

4. Remove the strut brace (NSX-T (open top)).

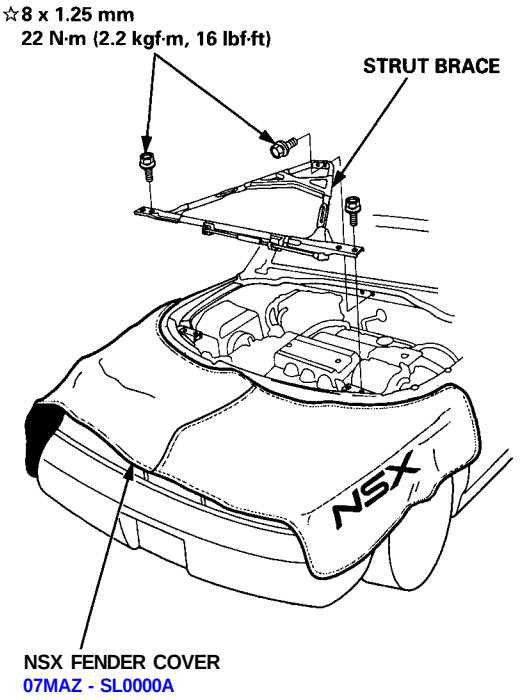

☆: CORROSION RESISTANT BOLT

(cont'd)

Engine Removal/Installation

Removal (cont'd)

5. Disconnect the fan motor connector, then remove the engine room fan assembly (A/T).

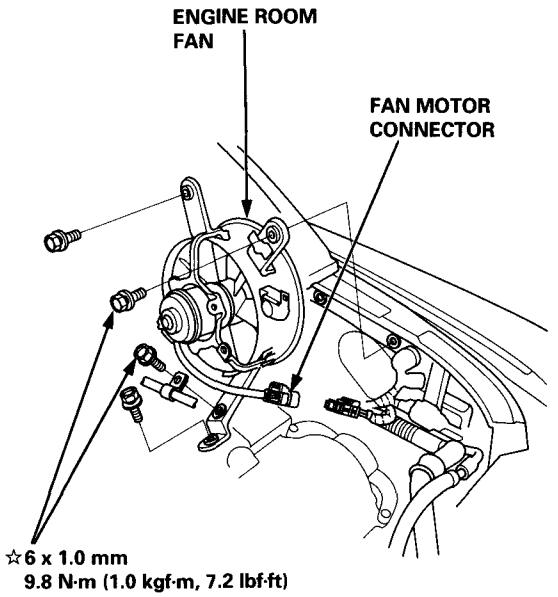

6. Remove the rear trim panels behind the passenger's seat, then disconnect four connectors from the engine control module (ECM) and three connectors from the floor wire harness.

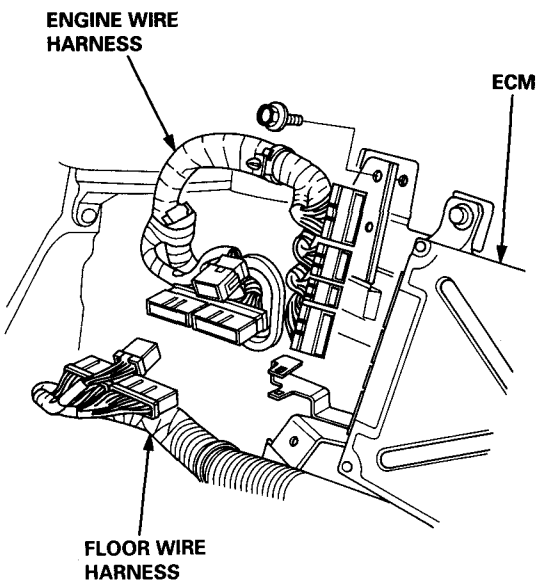

☆: CORROSION RESISTANT BOLT

7. Disconnect the spark plug voltage detection module connectors, ground cable and engine wire harness clamps.

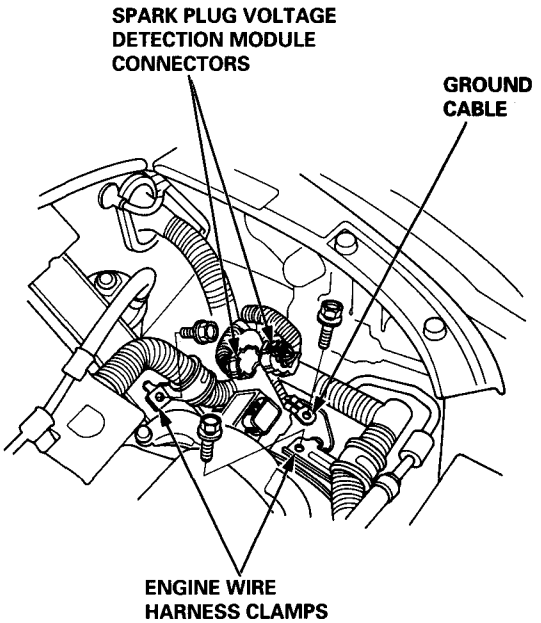

8. Disconnect the fuel pump resistor connector.

9. Disconnect the injector resistor connector and ground cable (A/T).

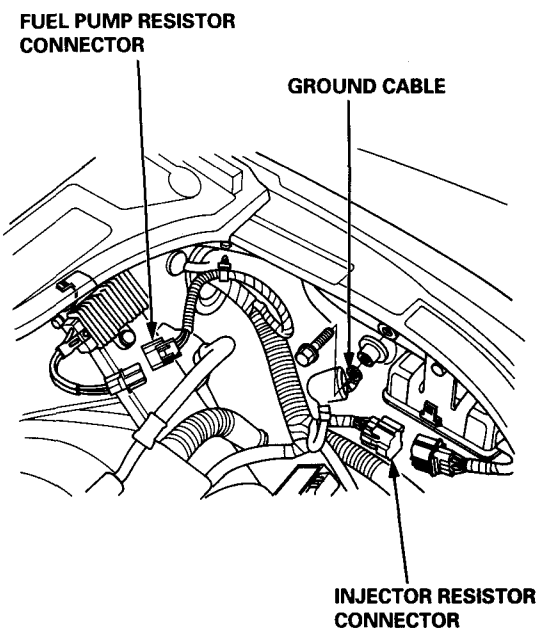

10. Relieve fuel pressure (see section 11).

⚠ WARNING Do not smoke while working on the fuel system. Keep open flame away from work area. Drain fuel only into an approved container.

11. Remove the fuel feed pipe and fuel return hose.

12. Remove the wire harness cover, then remove the fuel pipe clamp.

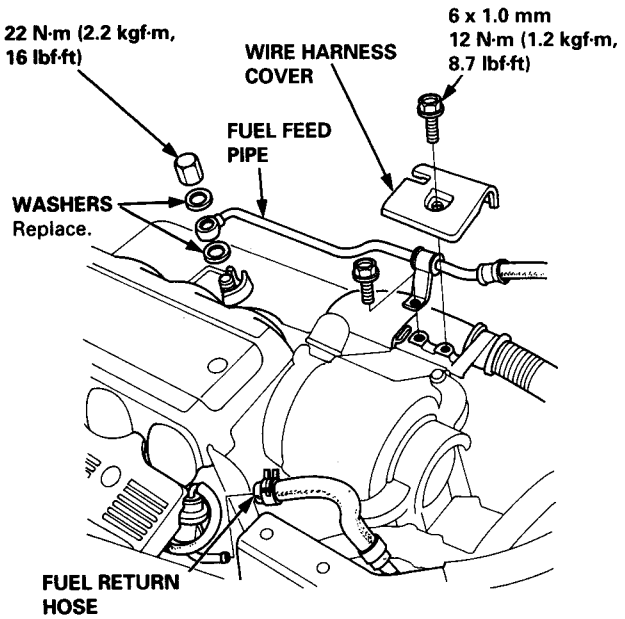

13. Remove the brake booster vacuum hose and evaporative emission (EVAP) control canister hose.

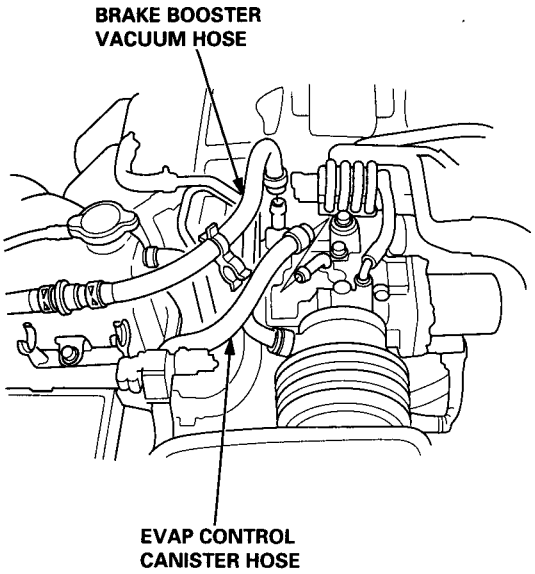

14. Remove the expansion tank cap.

15. Raise the hoist to full height.

16. Drain the engine coolant (see page 10-5).
    - Loosen the drain plug from the radiator lower tank.
    - Remove two drain bolts from the water pipes. Reinstall the drain bolts with new washers.
    - Loosen the front and rear engine drain bolts to drain engine coolant from the cylinder heads. Connect rubber hoses to the drain bolts.

17. Drain the transmission fluid. Reinstall the drain plug with a new washer.

18. Drain the engine oil. Reinstall the drain plug with a new washer.

19. Lower the hoist, then remove the air cleaner housing (see page 6-26).

20. Disconnect two hoses, then remove the expansion tank.

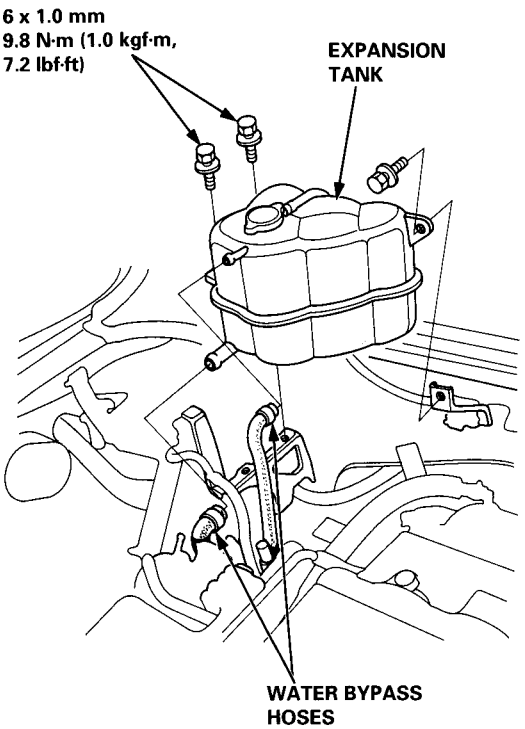

(cont'd)

Removal (cont'd)

21. Disconnect the engine wire harness connectors.

22. Remove the battery cable from the main fuse box.

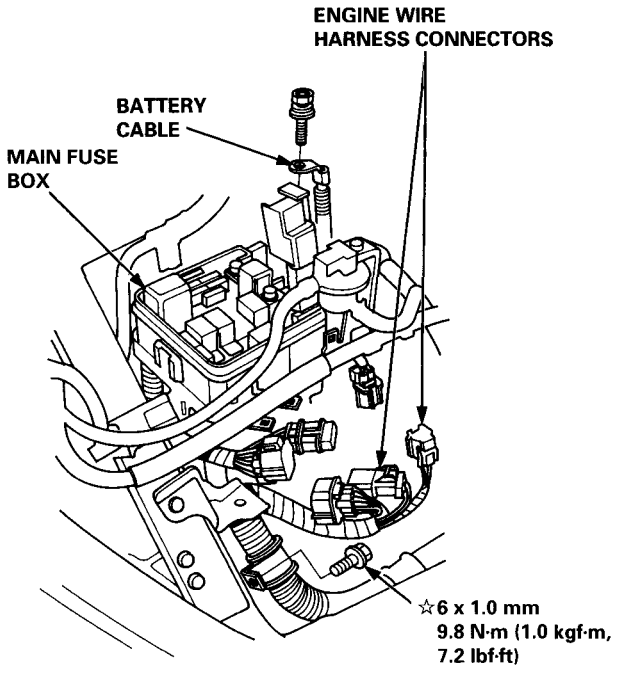

23. Disconnect the throttle body 6P connector, and remove the ground cable and starter cable.

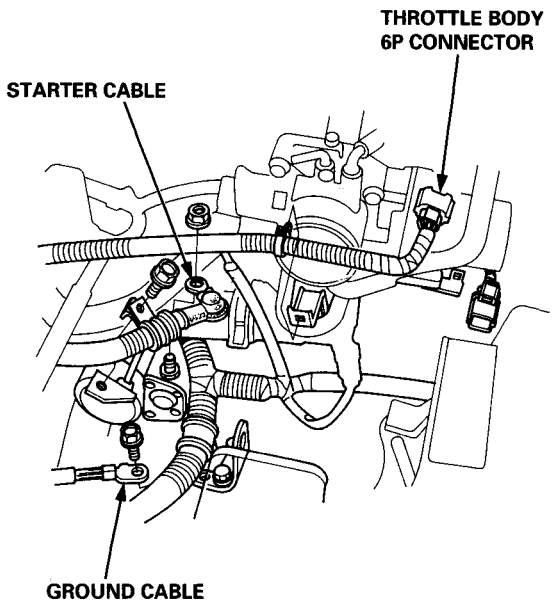

☆: CORROSION RESISTANT BOLT

24. Disconnect the two connectors from the emission control box, then remove the control box.
    - Do not disconnect the vacuum hoses.

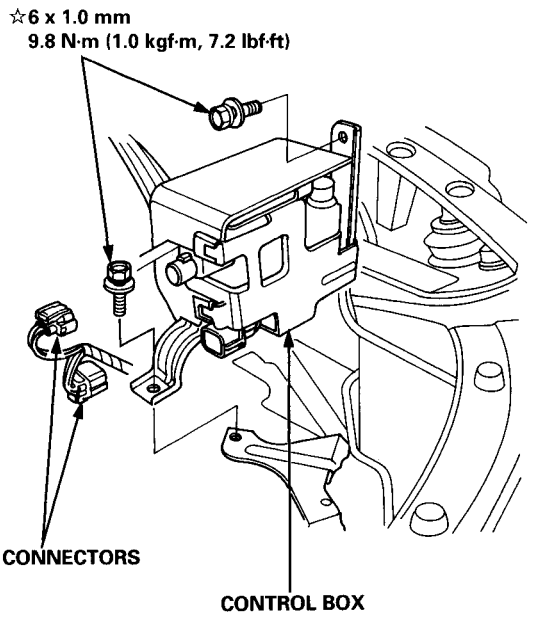

25. Remove the radiator hoses and heater hose.

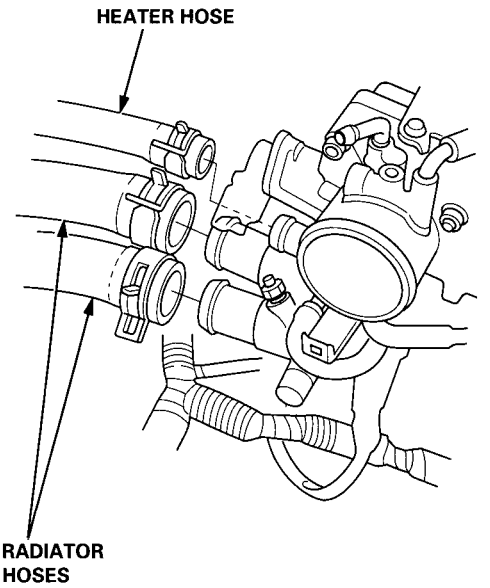

26. Loosen the idler pulley center nut and adjusting nut, then remove the air conditioning (A/C) compressor belt.

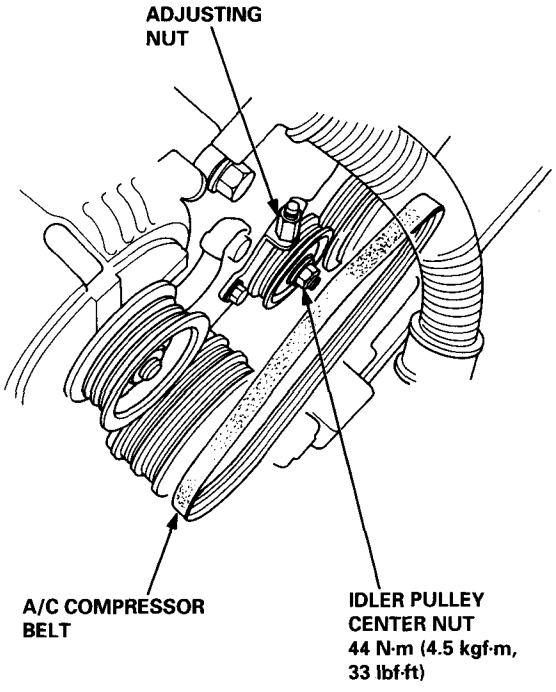

27. Move the trunk carpet, and disconnect the right rear wheel sensor connector. Push the wire and connector through the body hole into the engine compartment.

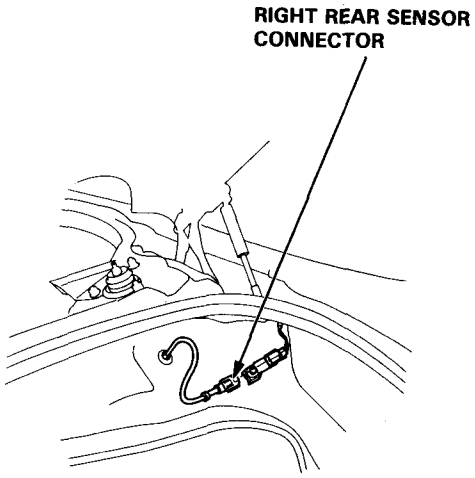

28. Raise the hoist to full height.

29. Remove the slave cylinder (M/T see section 12).
    - Do not disconnect the clutch hose.

30. Remove the lower cover, then remove the shift cable and select cable (M/T see section 13).

31. Remove the cable cover, then remove the shift cable (A/T).

    NOTE:
    - Take care not to bend the cable when removing it. Always replace a kinked cable with a new one.
    - Adjust the cable when installing.

32. Remove the engine under guard and the center rod assembly.

A/T:

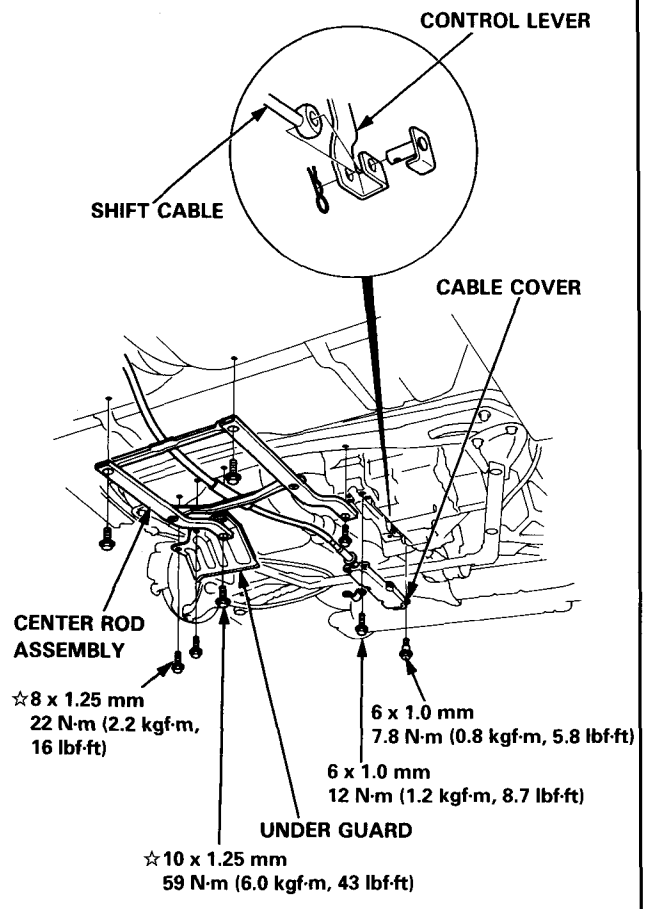

(cont'd)

Removal (cont'd)

33. Remove the left and right parking brake cables (see section 19).

34. Remove the rear beam rod assembly and parking brake cable clamps.

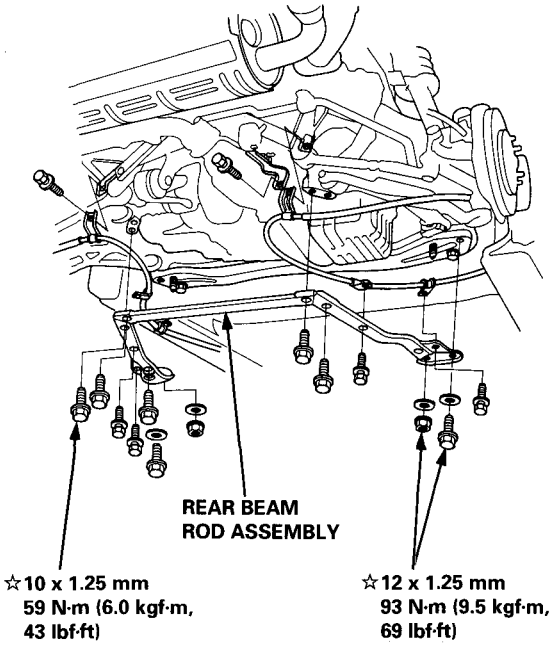

35. Remove the front engine mount, then remove the front beam.

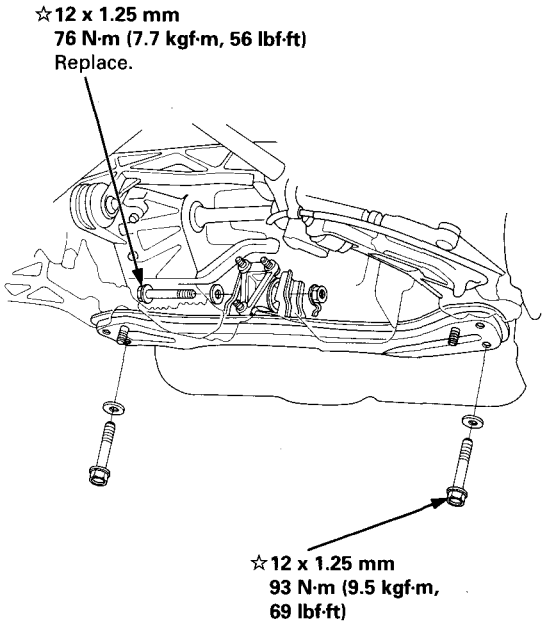

☆: CORROSION RESISTANT BOLT/NUT

36. Remove the A/C compressor (see section 22), then suspend it from the body.

NOTE:
- Do not remove the compressor hoses.
- Do not let the compressor hang by its hoses.

37. Reinstall the front beam and front engine mount.

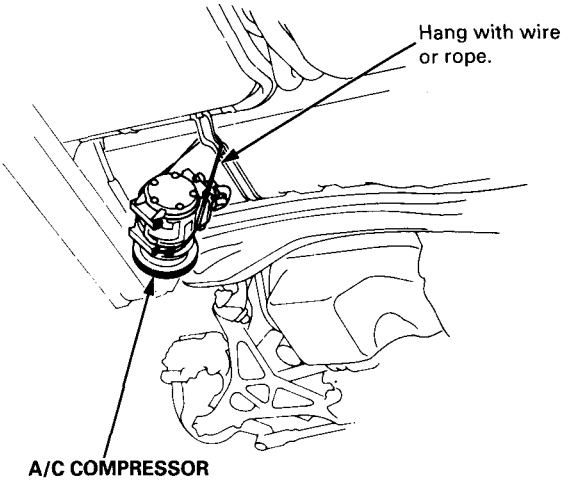

38. Remove the rear brake hoses, then plug the brake pipes with rubber caps (see section 19).

39. Disconnect the left rear wheel sensor connector, then remove the wheel sensor wire clamps and stabilizer link.

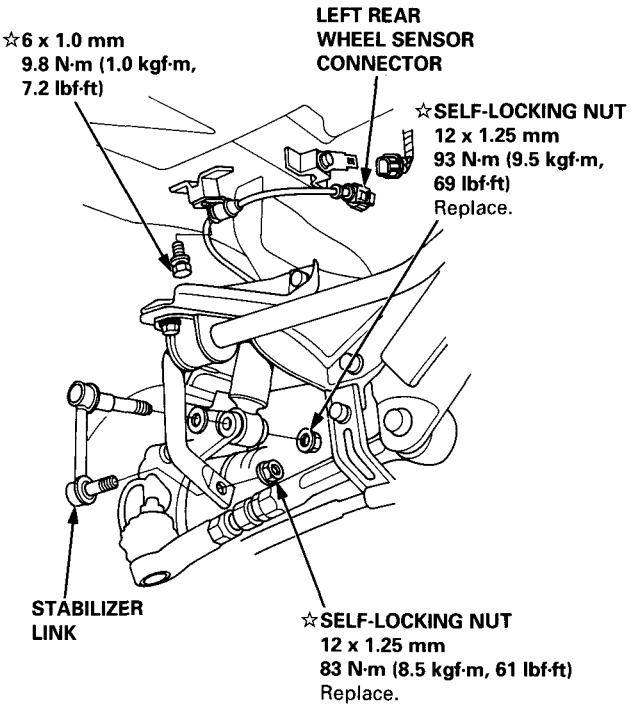

40. Remove the right wheel sensor wire clamps and stabilizer link.

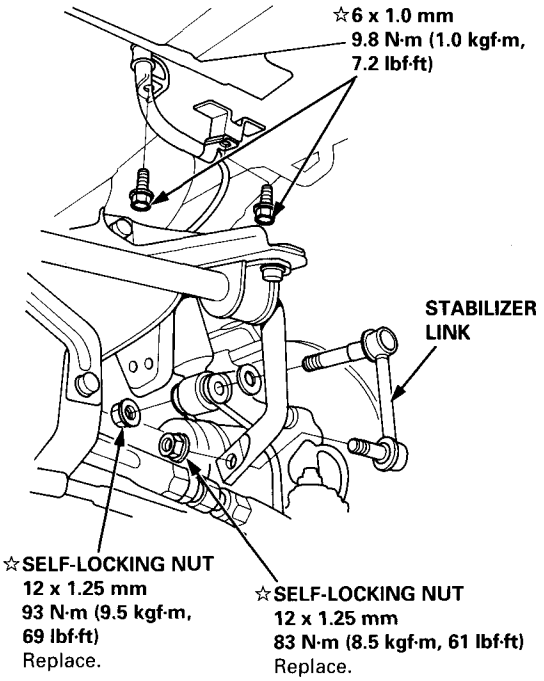

41. Disconnect the front secondary heated oxygen sensor connector, then remove the front exhaust pipe A, front three way catalytic converter (TWC) and front joint pipe assembly (A/T).

42. Separate the rear joint pipe from the muffler (A/T).

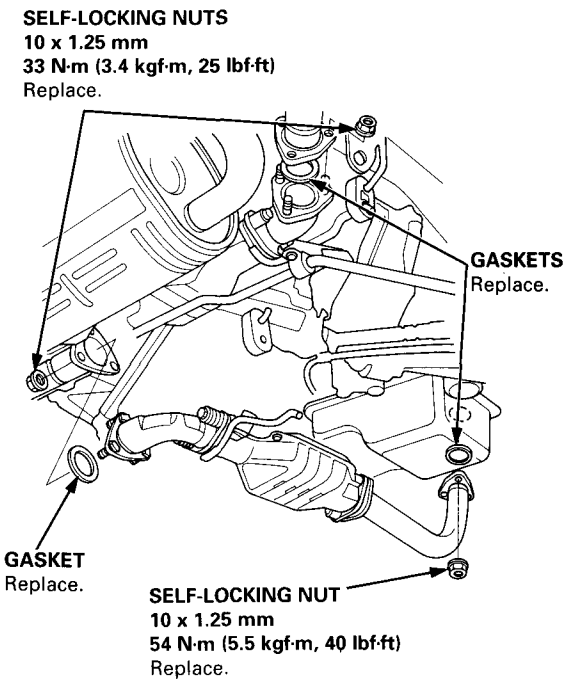

43. Remove the muffler (M/T).

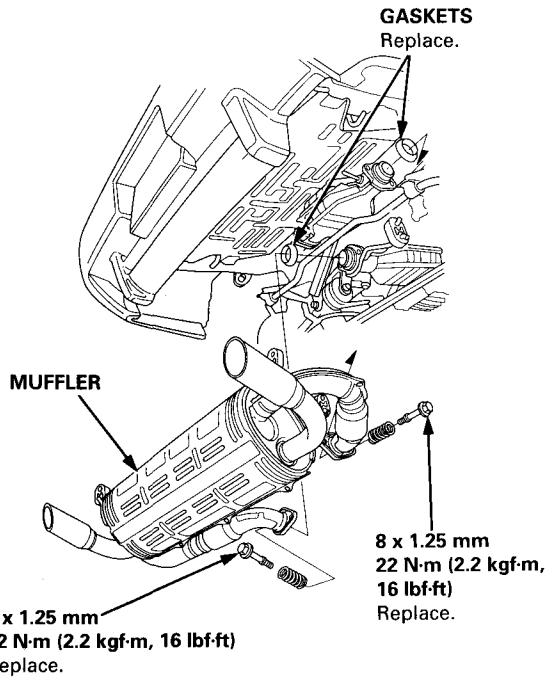

44. Position the special tool under the car. Lower the car just above the fixture. With the help of an assistant, attach the fixture to the subframe with two 12 mm nuts and two 10 mm bolts.

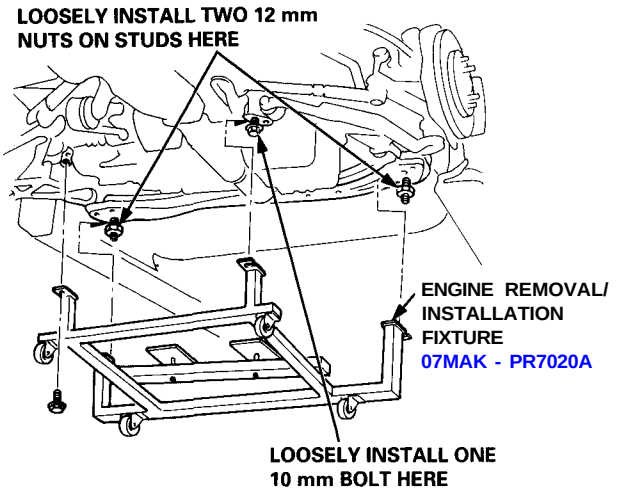

45. Adjust the pads on the fixture to support the oil pan and transmission housing.

46. Lower the car so the fixture is resting on its casters (or appropriate platform).

(cont'd)

Engine Removal/Installation

Removal (cont'd)

47. Remove the two bolts from the side engine mount near the alternator. Pivot the mounting bracket into the housing of the body.

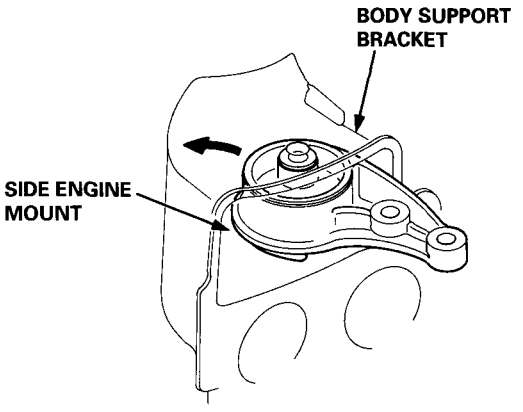

48. Remove the transmission mounting bolt.

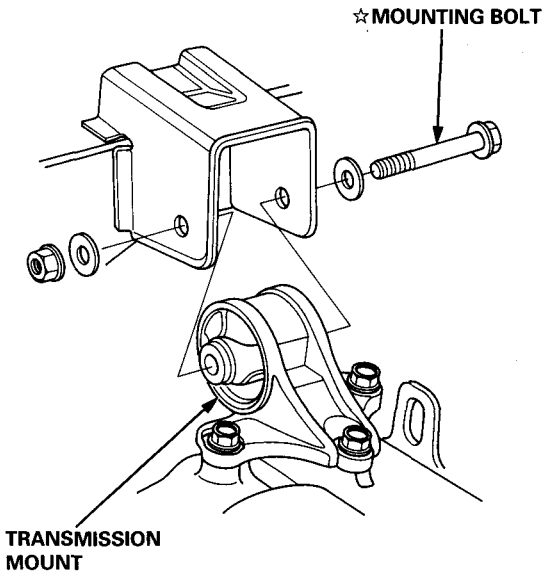

☆: CORROSION RESISTANT BOLT

49. Remove the twelve subframe-to-body mounting bolts.

50. Raise the car a few inches.

51. Check that all wires and hoses are disconnected from the engine assembly.

52. Raise the car completely off the engine/suspension assembly. Roll the assembly from under the car.

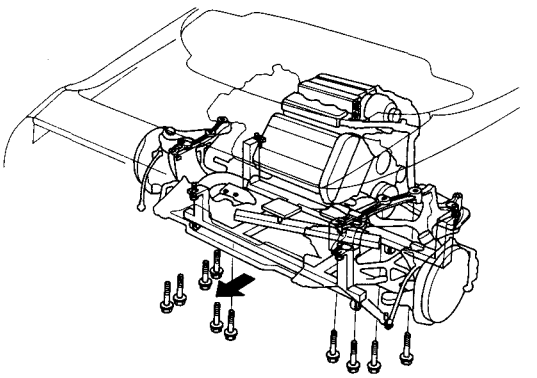

NOTE: Perform steps 53 thru 56 only if the engine assembly is to be removed from the subframe.

53. Remove the adjusting bolt and flange bolt, then separate the lower control arm from the subframe (see section 18).

54. Remove the flange bolt, then separate the toe control arm from the subframe (see section 18).

CAUTION: Make sure that the reference marks on the control arm are aligned.

55. Remove the heat shield form the intermediate shaft bearing support, then remove the driveshafts (see section 16).

NOTE:
- Coat all precision finished surfaces with clean engine oil.
- Tie plastic bags over the driveshaft ends.

56. Attach a chain hoist to the engine.
Remove the front and rear mount mounting bolts, then separate the engine from the suspension and the beam assembly.

CAUTION: Do not hit the engine oil cooler on the rear right beam bracket.

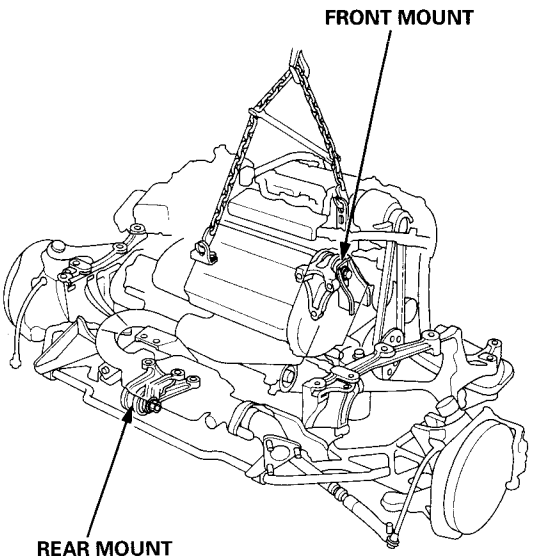

Engine Removal/Installation

Installation

Additional Torque Value Specifications:

NOTE: For manifold replacement, refer to section 9.

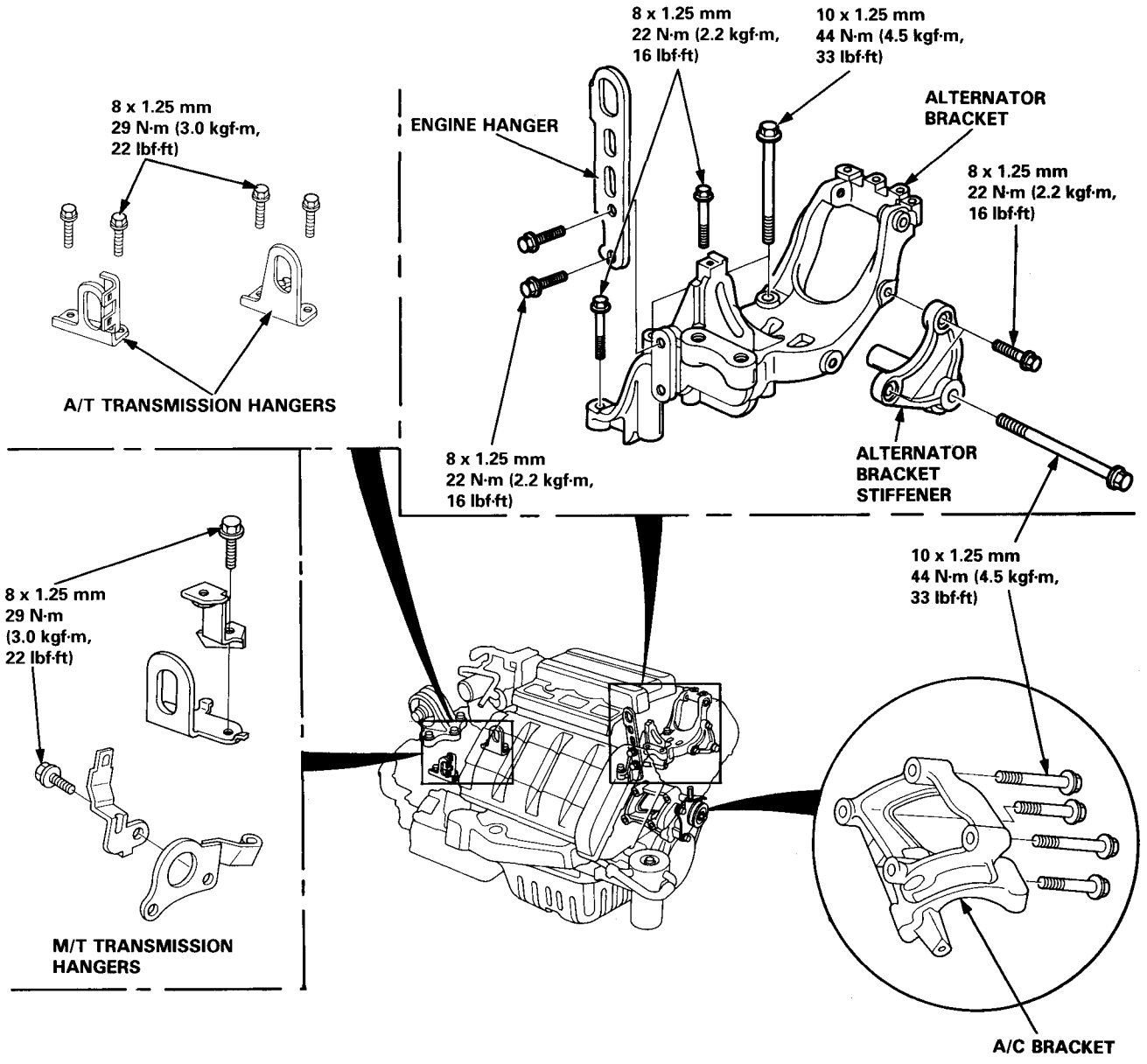

Engine Installation:
Install the engine in the reverse order of removal. Reinstall the mount bolts/nuts in the following sequence. Failure to follow these procedures may cause excessive noise and vibration, and reduce bushing life.

1. Install the rear mount, then tighten the bolts on the transmission side.

   NOTE: Do not tighten the mounting bolt.

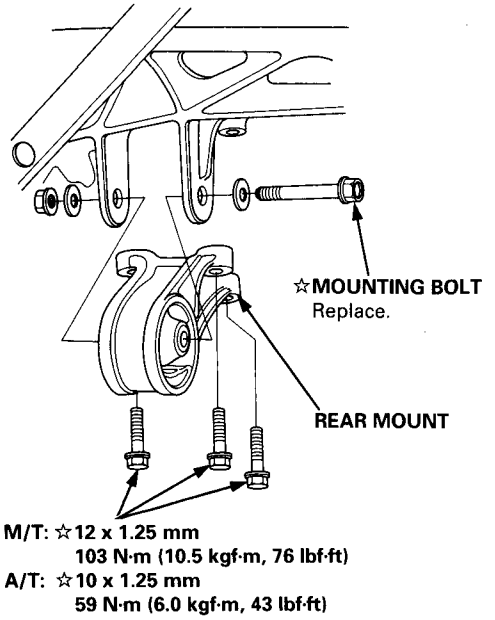

2. Install the front mount, then tighten the bolts in the numbered sequence as shown (① – ②).

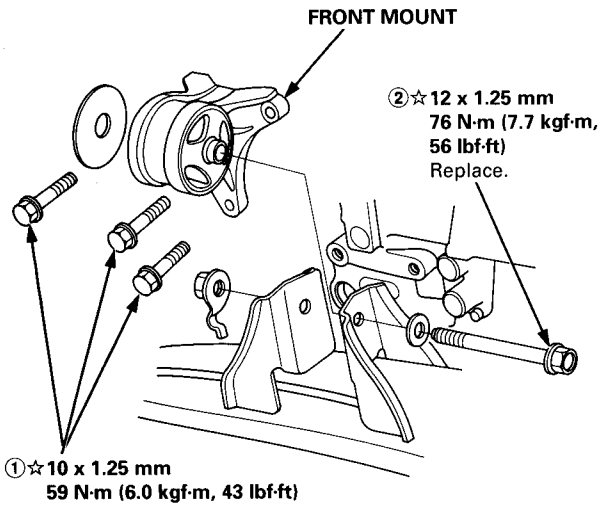

☆: CORROSION RESISTANT BOLT

3. Install the subframe, then tighten the subframe-to-body mounting bolts (see section 20).

   NOTE: Align the bolt holes of the beam brackets and body with a tapered punch.

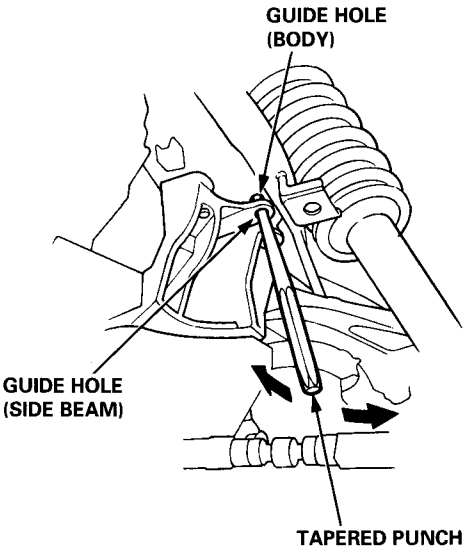

4. Install the transmission mount, then tighten the bolts on the transmission side.

   NOTE: Do not tighten the mounting bolt.

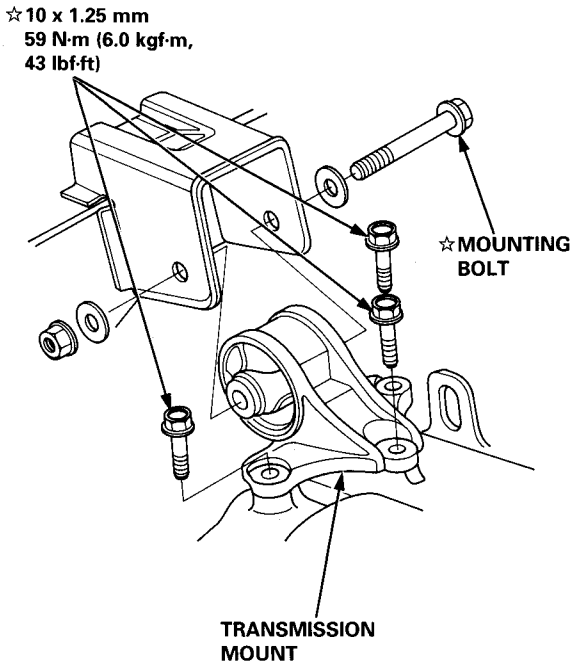

(cont'd)

Installation (cont'd)

5. Install the side engine mount, then tighten the bolts in the numbered sequence as shown (① – ②).

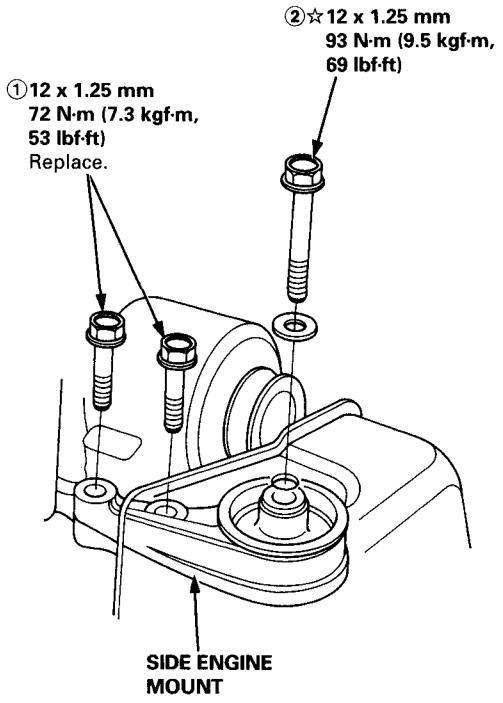

6. Tighten the transmission mount mounting bolt.

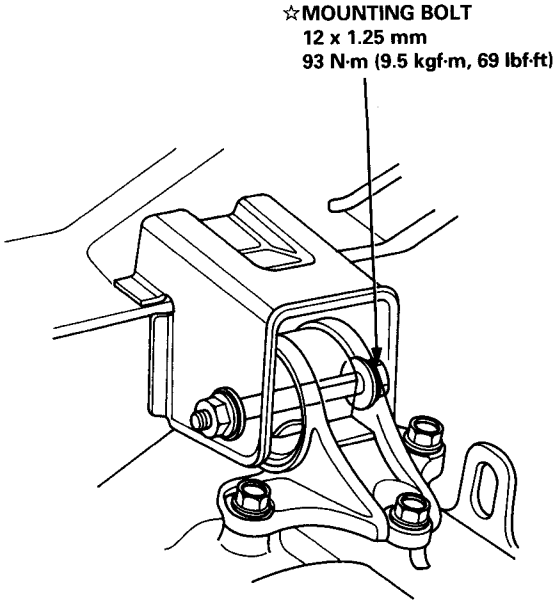

☆: CORROSION RESISTANT BOLT

7. Tighten the rear mount mounting bolt.

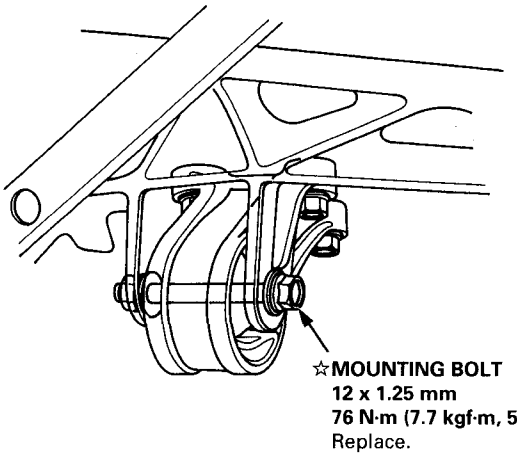

- Check that the spring clip on the end of each driveshaft clicks into place.

CAUTION: Use new spring clips.

- Bleed air from the cooling system (see page 10-5).
- Bleed air from the brake lines (see section 19).
- Check the clutch pedal free play (see section 12).
- Adjust the clutch guide assemblies when disassembling clutch (see section 12).
- Check that the transmission shifts into gear smoothly.
- Adjust the alternator belt (see section 23).
- Adjust the A/C compressor belt (see section 22).
- Clean battery posts and cable terminals with sandpaper, assemble, then apply grease to prevent corrosion.
- Inspect for fuel leakage (see section 11).
  - After assembling the fuel line parts, turn on the ignition switch (do not operate the starter) so that the fuel pump operates for approximately two seconds and the fuel line pressurizes. Repeat this operation two or three times and check for fuel leakage at any point in the fuel line.
- Check and adjust wheel alignment (see section 18).
- Refill the engine with engine oil (see page 8-4).
- Refill the transmission with oil/fluid (see section 13 or section 14).

Cylinder Head/Valve Train

Special Tools 6–2
PCV Collar
Replacement (’04-05 Models) . . . 6–2
VTEC Solenoid Valve
Inspection 6–6
VTEC Rocker Arms
Manual Inspection 6–7
Inspection Using
Special Tools 6–7
Valve Clearance
Adjustment 6–9
Crankshaft Pulley and Pulley Bolt
Replacement 6–12
Timing Belt
Component Location
Index 6–13
Inspection 6–14
Tension Adjustment 6–14
Removal 6–15
Installation 6–18
CKP/CYP Sensor
Replacement 6–20
Cylinder Head
Component Location
Index 6–21
Removal 6–24
Warpage 6–39
Installation 6–45
Rocker Arms and Shafts
Removal 6–31
Disassembly/
Reassembly 6–32
Clearance Inspection 6–34
Rocker Arms and Lost Motion
Assemblies
Inspection 6–33
Rocker Arms
Installation 6–47
Camshafts
Inspection 6–35
Installation 6–47
Valves, Valve Springs and
Valve Seals
Replacement 6–37
Installation Sequence 6–44
Installation 6–45
Valve Seats
Reconditioning 6–40
Valve Guides
Valve Movement 6–41
Replacement 6–42
Reaming 6–43

Special Tools

Ref. No.	Tool Number	Description	Qty	Page Reference
①	07HAH - PJ7010B	Valve Guide Reamer, 5.5 mm	1	6-43
②	07JAA - 001020A	Socket, 19 mm	1	6-12
③	07JAB - 001020A	Holder Handle	1	6-12
④	07MAA - PR70110	Tappet Adjuster	1	6-10
⑤	07MAA - PR70120	Tappet Locknut Wrench	1	6-10
⑥	07MAF - PR9010A	Valve Spring Compressor Attachment Extension	1	6-37
⑦	07MAJ - PR7020A	VTEC Plug	1	6-7, 6-8
⑧	07NAB - 001030A	Holder Attachment, 45 mm	1	6-12
⑨	07NAB - 001040A	Holder Attachment, 50 mm	1	6-12
⑩	07742 - 0010100	Valve Guide Driver, 5.5 mm	1	6-42, 6-43
⑪	07757 - PJ1010A	Valve Spring Compressor Attachment	1	6-37



①



②

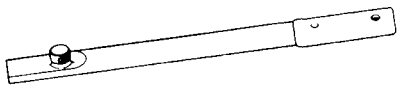

③



④

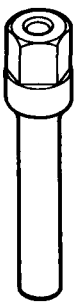

⑤

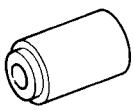

⑥

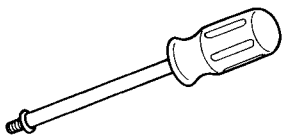

⑦

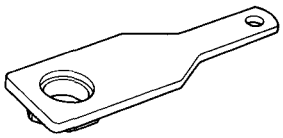

⑧ ⑨

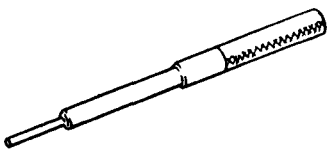

⑩

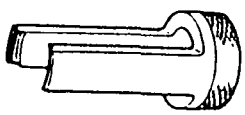

⑪

VTEC Solenoid Valve Inspection

1. Disconnect the 2P connector from the VTEC solenoid valve.

2. Measure resistance between the BLU/YEL (front/rear) terminals and body ground.

   Resistance: approx 14 – 30 Ω

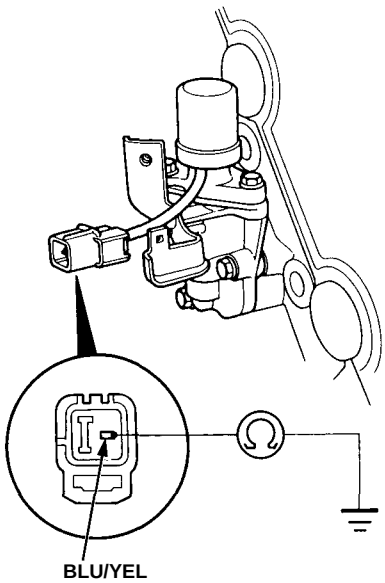

3. If the resistance is within specifications, remove the VTEC solenoid valve from the cylinder head, and check the VTEC solenoid valve filter for clogging.
   - If there is clogging, replace the engine oil filter and engine oil.

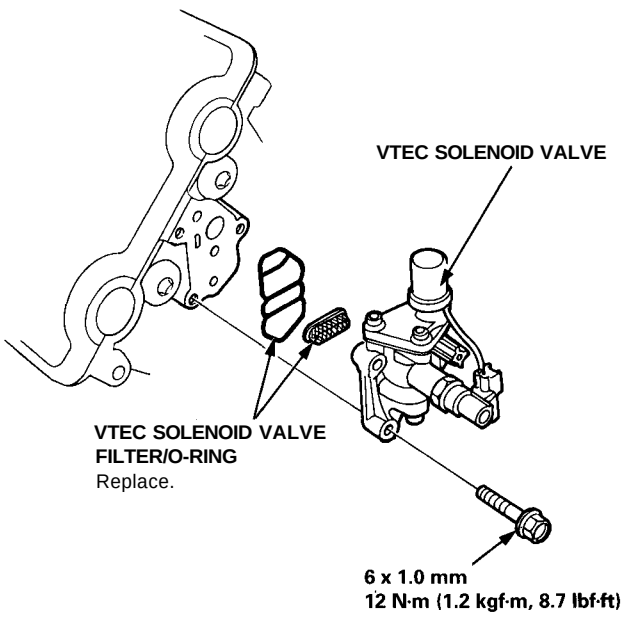

4. If the filter is not clogged, push the VTEC solenoid valve with your finger and check its movement.
   - If VTEC solenoid valve is normal, check the engine oil pressure.

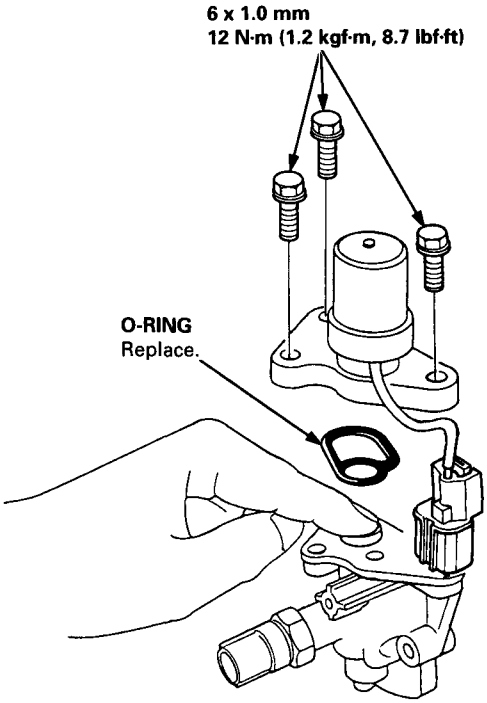

Rocker Arms — Manual Inspection

1. Remove the ignition coil covers (see page 6-15).
2. Remove the ignition coils (see page 6-15).
3. Remove the cylinder head covers.

   NOTE: Refer to pages 6-49, 6-50 when installing the cylinder head cover.

4. Set the No. 1 piston at top dead center (TDC) (see page 6-19).
5. Push the mid rocker arms on the No. 1 cylinder manually.
6. Check that the mid rocker arms move independently of the primary and secondary rocker arms.

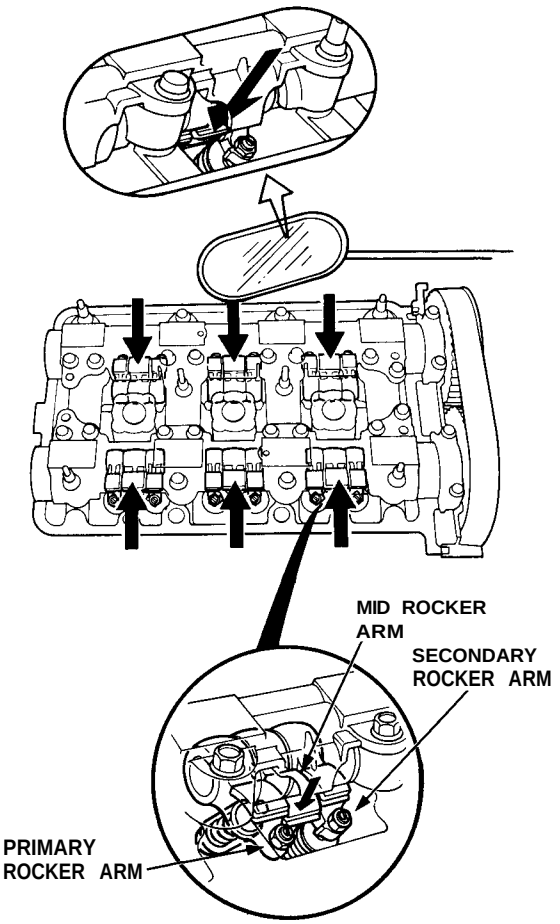

7. Check the mid rocker arms of each cylinder at TDC.
   - If a mid rocker arm does not move, remove the mid, primary and secondary rocker arms as an assembly and check that the pistons in the mid and primary rocker arms move smoothly.
   - Replace the rocker arms as an assembly if there is any abnormality.

Rocker Arms — Inspection Using Special Tools

CAUTION:

- **Before using the special tool, make sure that the air pressure gauge on the air compressor indicates over 250 kPa (2.5 kgf/cm^2, 36 psi).**
- **Inspect the valve clearance before rocker arm inspection.**
- **Cover the timing belt with a shop towel to prevent getting oil on the belt.**
- **Check the mid rocker arms of each cylinder at TDC.**

1. Plug the relief hole with the special tool as shown.

Front cylinder head:

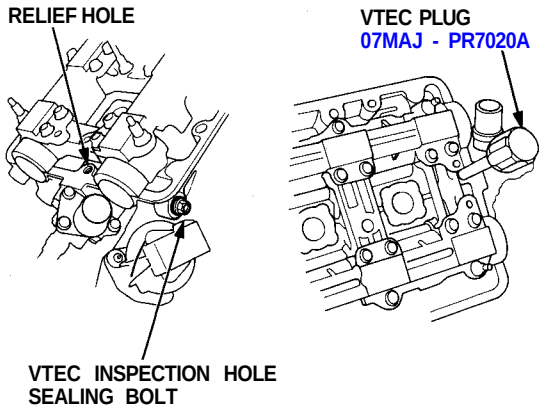

Rear cylinder head:

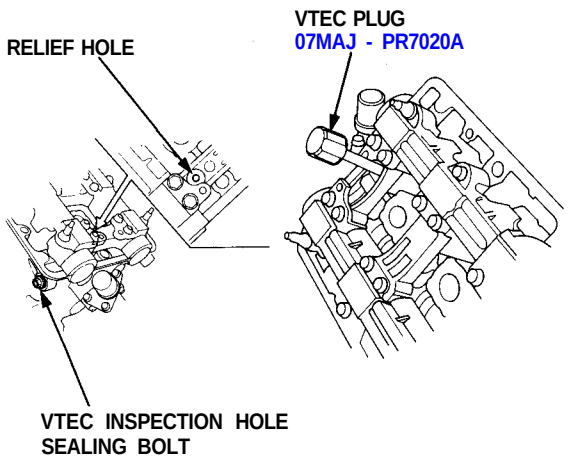

(cont'd)

Rocker Arms — Inspection Using Special Tools (cont'd)

2. Remove the 10 mm sealing bolt and washer from the inspection hole and connect the tools.

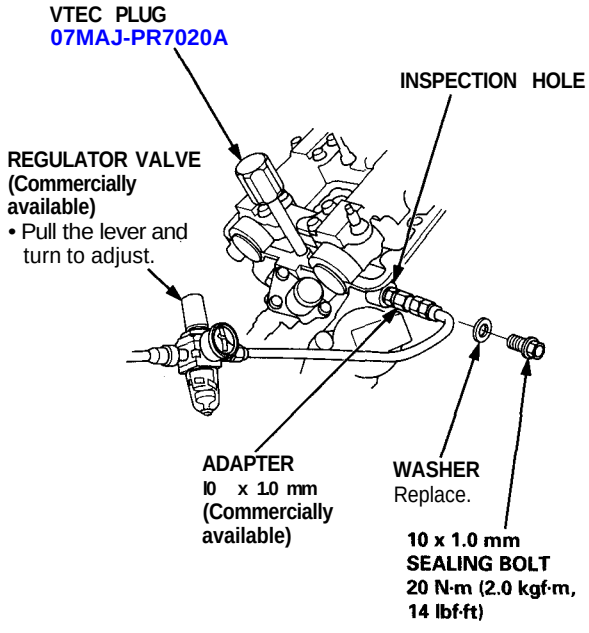

3. Apply the specified air pressure to the rocker arm pistons after loosening the regulator valve on the VTEC inspection attachment.

Specified Air Pressure:
250 kPa (2.5 kgf/cm², 36 psi)
–490 kPa (5.0 kgf/cm², 71 psi)

4. Make sure that the primary and secondary rocker arms are mechanically connected by pistons and that the mid rocker arms do not move when pushed manually.

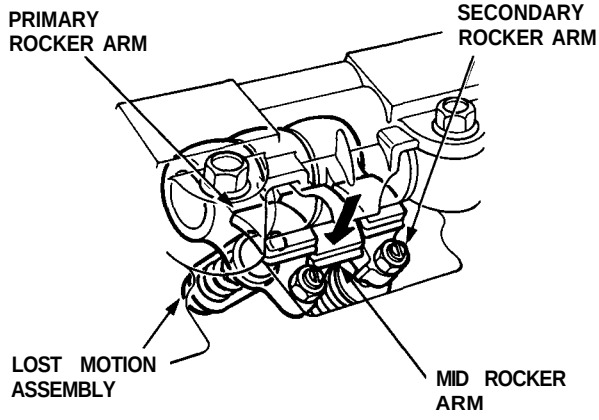

- If a mid rocker arm moves independently of the primary and secondary rocker arms, replace the rocker arms as a set.

5. Remove the tools.

6. Check the operation of the lost motion assembly by pushing on the mid rocker arm. The lost motion assembly should compress fully and operate smoothly through its full stroke. Replace the assembly if it does not work smoothly.

After inspection, check that the Malfunction Indicator Lamp does not show an error code.

Valve Clearance

Adjustment

NOTE:
- Valves should be adjusted cold, when the cylinder head temperature is less than 100°F (38°C).
- Adjustment is the same for both intake and exhaust valves.
- Adjust valve clearance at TDC of each cylinder.
- Do not rotate the engine counterclockwise. The timing belt could jump a tooth on the camshaft pulleys.

1. Remove the cylinder head covers.

   NOTE: Refer to pages 6-49, 6-50 when installing the cylinder head cover.

FRONT:

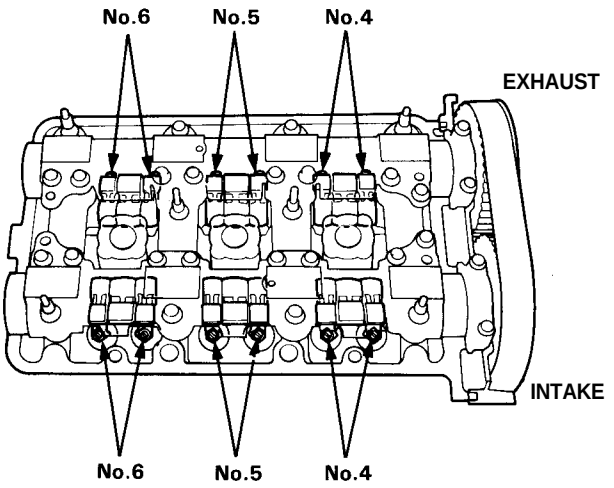

REAR:

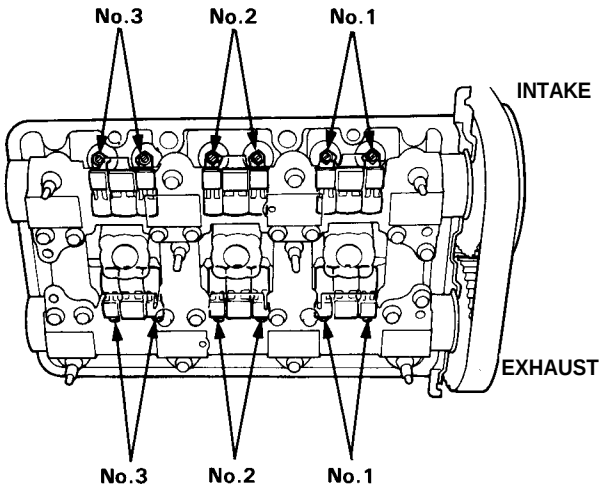

2. Rotate the crankshaft to set No. 1 piston at TDC.
   - TDC mark (white paint) on the crankshaft pulley should align with pointer on the timing lower cover, and TDC grooves on the camshaft pulleys should align with timing belt cover plates.

FRONT:

Number 1 PISTON at TDC

REAR:

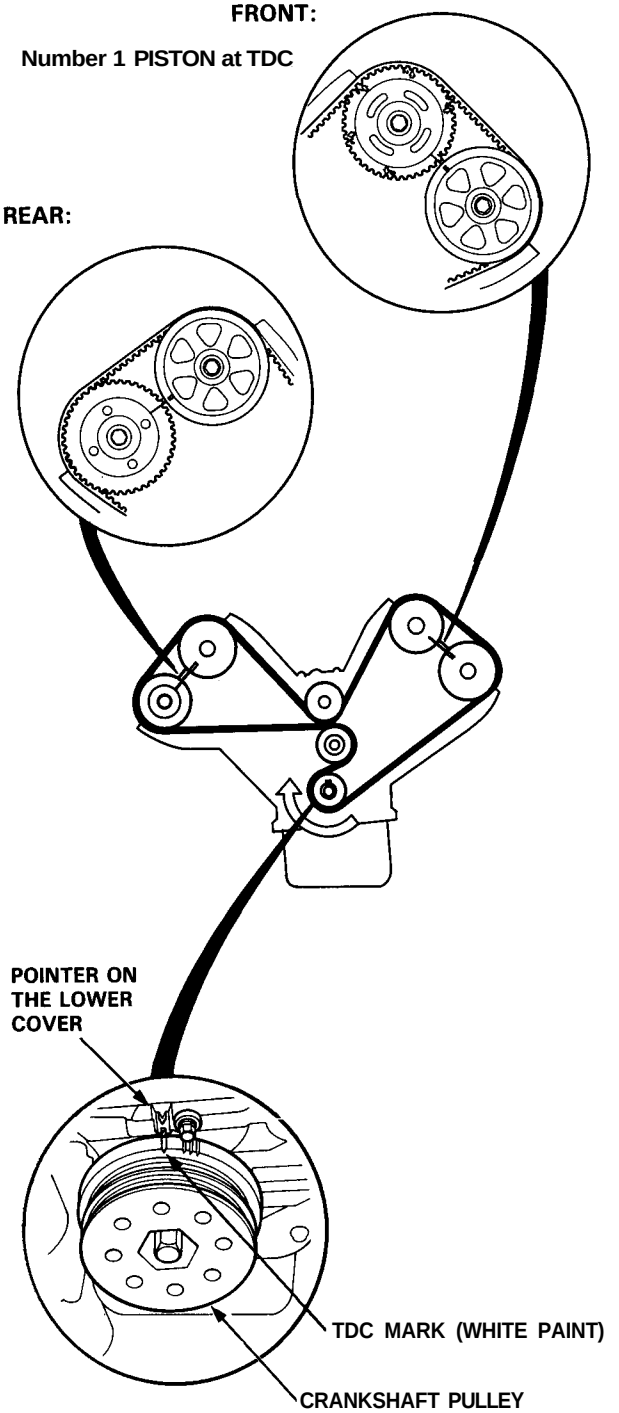

(cont'd)

Valve Clearance

Adjustment (cont'd)

3. Manually inspect the rocker arms for independent operation (see pages 6-7, 6-8).

4. Adjust valves on No. 1 cylinder.
   - Adjusting screws are on primary and secondary rocker arms.

   Intake: 0.15-0.19 mm (0.006-0.007 in)
   Exhaust: 0.17-0.21 mm (0.007-0.008 in)

5. Loosen the locknut, and turn the adjustment screw until the feeler gauge slides back and forth with a slight amount of drag.

INTAKE:

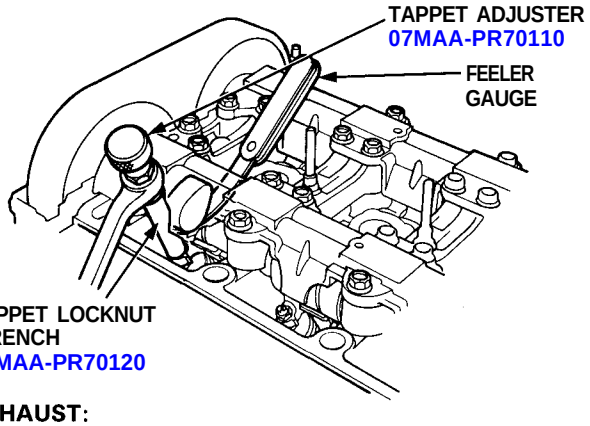

EXHAUST:

NOTE: Use a mirror to check if the special tool is positioned on the locknut correctly.

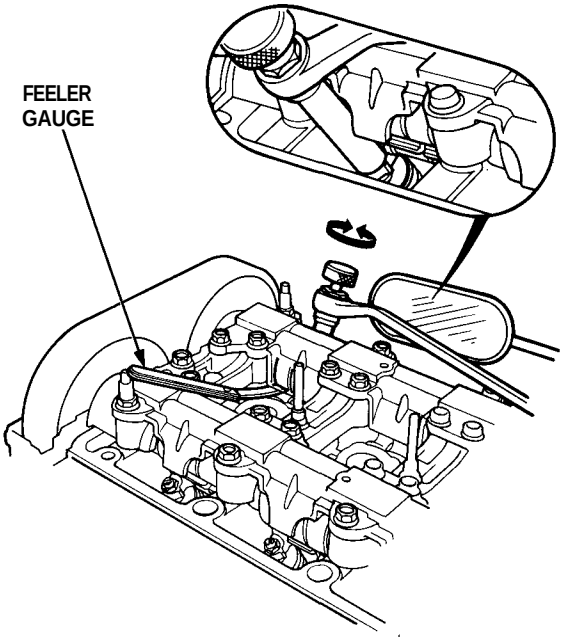

6. Tighten the locknut and check the clearance again. Repeat adjustment if necessary.

INTAKE:

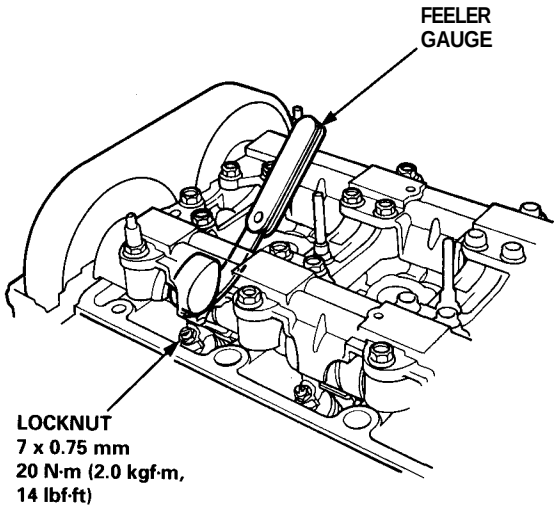

EXHAUST:

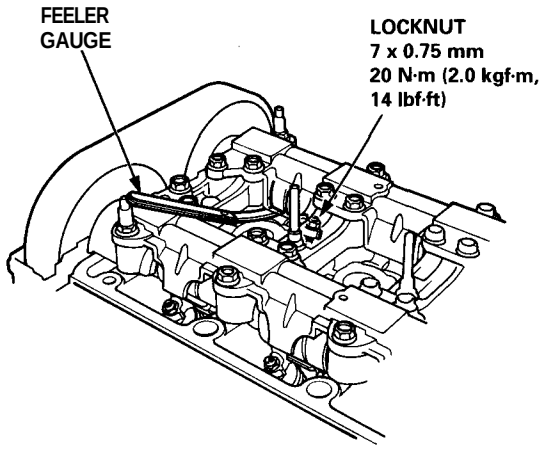

7. Rotate the crankshaft 120° clockwise (camshaft pulley turns 60°). Check that the front intake camshaft pulley is positioned as shown.
Repeat step 3 to step 6.
Number 4 piston at TDC:

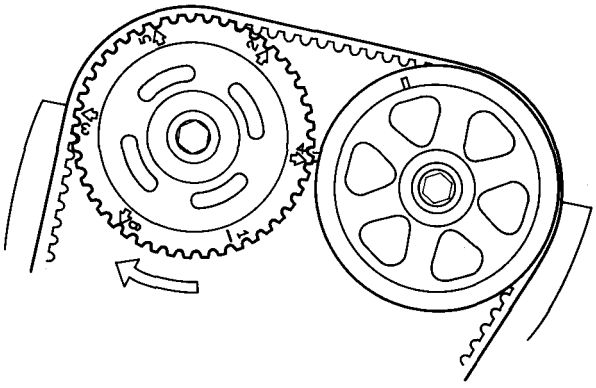

8. Rotate the crankshaft 120° clockwise (camshaft pulley turns 60°). Check that the front intake camshaft pulley is positioned as shown.
Repeat step 3 to step 6.
Number 2 piston at TDC:

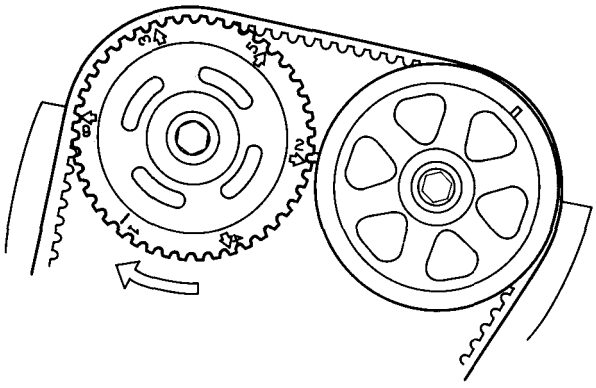

9. Rotate the crankshaft 120° clockwise (camshaft pulley turns 60°). Check that the front intake camshaft pulley is positioned as shown.
Repeat step 3 to step 6.
Number 5 piston at TDC:

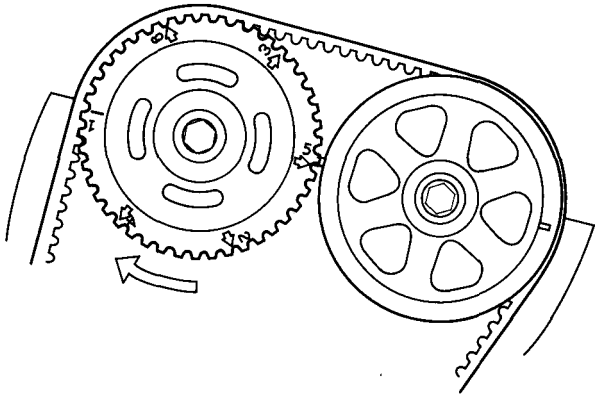

10. Rotate the crankshaft 120° clockwise (camshaft pulley turns 60°). Check that the front intake camshaft pulley is positioned as shown.
Repeat step 3 to step 6.
Number 3 piston at TDC:

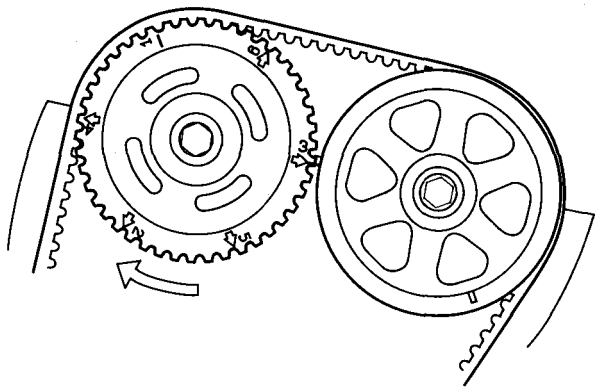

11. Rotate the crankshaft 120° clockwise (camshaft pulley turns 60°). Check that the front intake camshaft pulley is positioned as shown.
Repeat step 3 to step 6.
Number 6 piston at TDC:

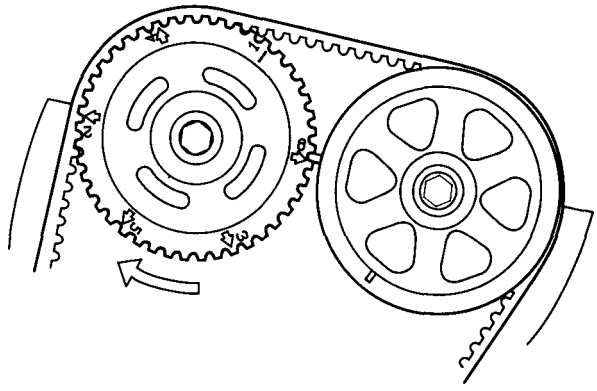

Crankshaft Pulley and Pulley Bolt

Replacement

When installing and tightening the pulley, follow the procedure below.

Clean, remove any oil and lubricate points shown below.
○ : Clean
× : Remove any oil
● : Lubricate

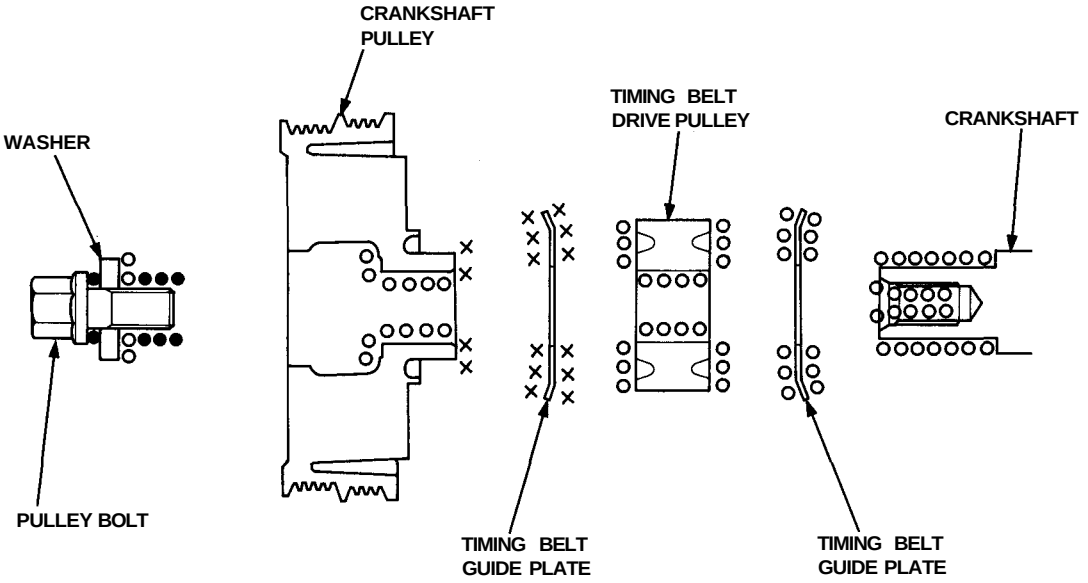

Crankshaft pulley bolt size and torque value:
16 x 1.5 mm
245 N-m (25.0 kgf-m, 181 lbf-ft)

NOTE:
- Do not use an impact wrench when installing.
- Make sure the handle thumb screw aligns with the hole in the attachment.

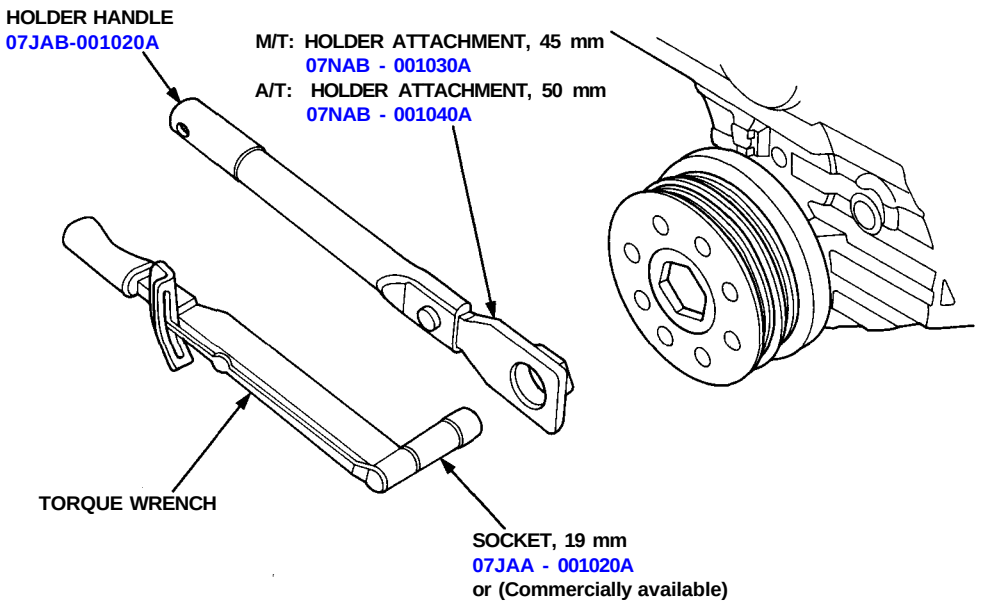

Timing Belt

Illustrated Index

NOTE:

- Refer to page 6-18 for positioning crankshaft and pulley before installing the belt.
- If it is to be reused, mark the direction of rotation on the belt before removing it.
- Do not use the middle cover and lower cover to store removed items.
- Clean the middle cover and lower cover before installing them.
- Replace the camshaft seals and crankshaft seals if there is oil leakage.
- Refer to page 6-12 before installing timing belt.

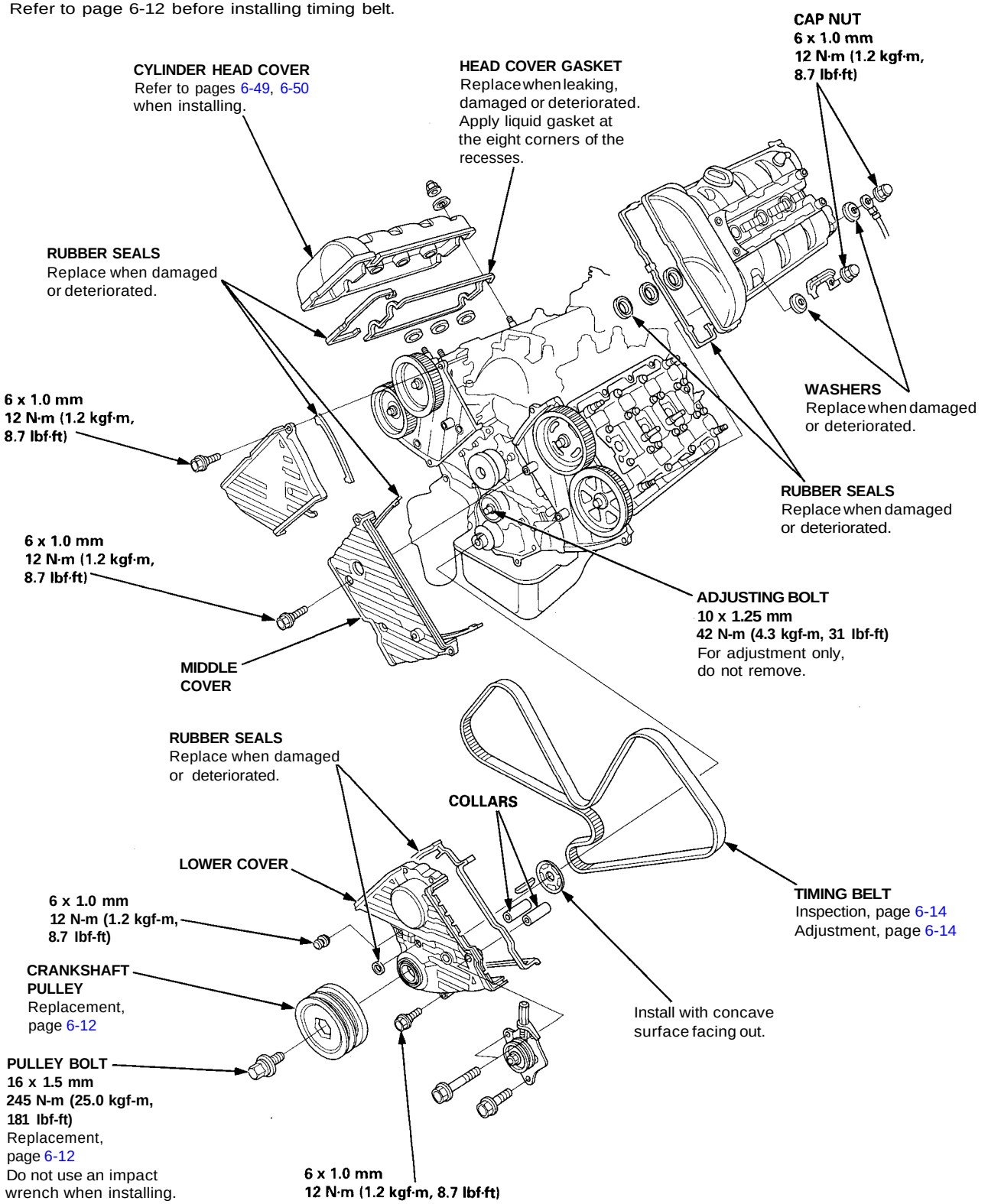

Timing Belt

Inspection

1. Remove the ignition coil covers and harness clamps.
2. Disconnect the connectors, then remove the ignition coils.
3. Remove the cylinder head covers.
4. Inspect the timing belt for cracks and coolant or oil soaking.

NOTE:
- Replace the belt if coolant or oil soaked.
- Remove any oil or solvent that gets on the belt.

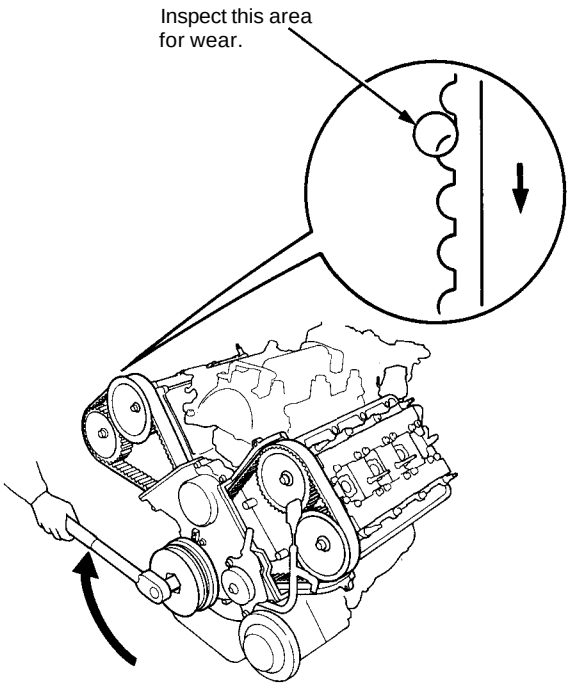

Tension Adjustment

CAUTION:
- **Always adjust timing belt tension with the engine cold.**
- **Do not rotate the crankshaft when the adjusting bolt is loose (the timing belt will skid over the teeth of the rear intake camshaft pulley).**
- **Adjust the belt tension only when the belt has been removed and reinstalled or replaced.**

NOTE:
- Tensioner is spring-loaded to apply proper tension to the belt automatically after making the following adjustment.
- Inspect the timing belt before adjusting the belt tension.
- Always rotate the crankshaft clockwise. Rotating it counterclockwise may result in improper adjustment of the belt tension or cause the belt to jump a tooth on the camshaft pulleys.

1. Install the timing belt with the No. 1 piston at TDC (see pages 6-18, 6-19).
2. Remove the slack in the sequence of ⓐ ⓑ ⓒ and ⓓ by turning each camshaft pulley slightly.
3. Loosen the timing belt adjusting bolt 180° (the slack at ⓔ should be eliminated).
   Then, tighten the timing belt adjusting bolt.
4. Verify that No. 1 piston is at TDC (see page 6-19).
5. Rotate the crankshaft clockwise nine teeth on the camshaft pulley (The blue mark on the crankshaft pulley should line up with the pointer on lower cover.)
6. Loosen the timing belt adjusting bolt.
7. Retighten the adjusting bolt, torque to 4.2 N-m (4.3 kgf-m, 31 lbf-ft).

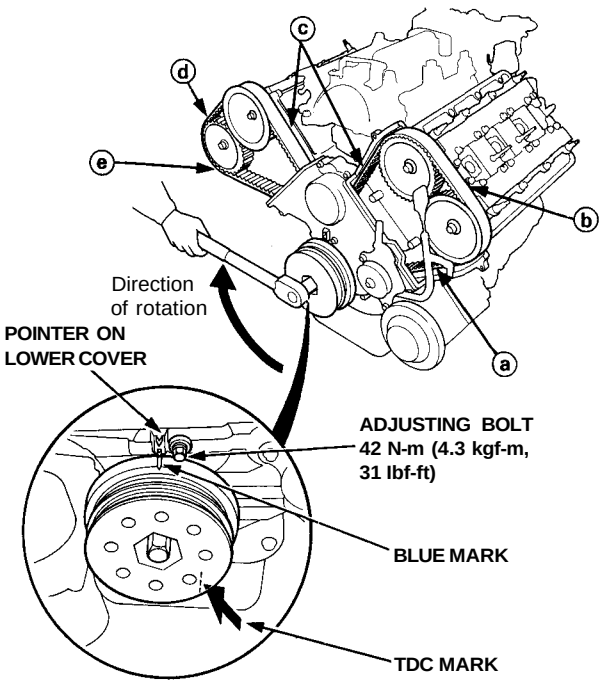

Removal

NOTE:
- Before removing the belt, turn the crankshaft pulley so the No. 1 piston is at top dead center (TDC) (see page 6-19).
- Inspect the water pump after removing the timing belt (see page 10-11).
- If it is to be reused, mark the direction of rotation on the belt.
- Replace the timing belt at 105,000 miles (168,000 km) according to the maintenance schedule (normal conditions/severe conditions). If the vehicle is regularly driven in one or more of the following conditions, replace the timing belt at 60,000 miles (U.S.A.) 100,000 km (Canada).
  — In very high temperatures (over 110°F, 43°C).
  — In very low temperatures (under -20°F, -29°C).

1. Disconnect the battery negative terminal first, then the positive terminal.

2. Remove the right rear wheel/tire.

3. Remove the engine oil cooler base assembly.

   NOTE: Do not disconnect the hoses.

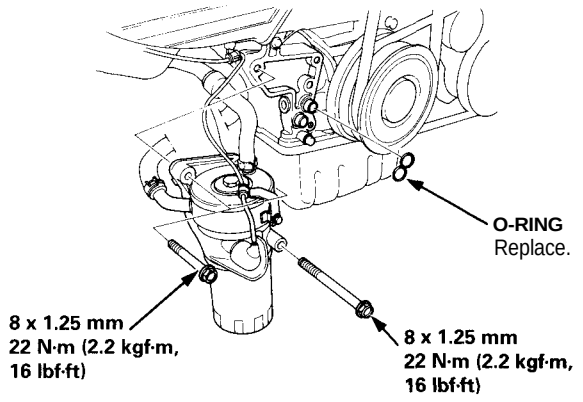

4. Remove the strut brace (see page 5-3).

5. Remove the intake manifold plate and top cover (see page 6-26).

4. Remove the ignition coil covers, the injector cover and the wire harness covers.

5. Remove the ignition coils and the connectors.

   NOTE:
   - There are front and rear ignition coils and covers. They can be identified by the mark FF (front) or RR (rear) printed on them.
   - When installing front and rear ignition coil covers, attach a rubber seal to the intake side.

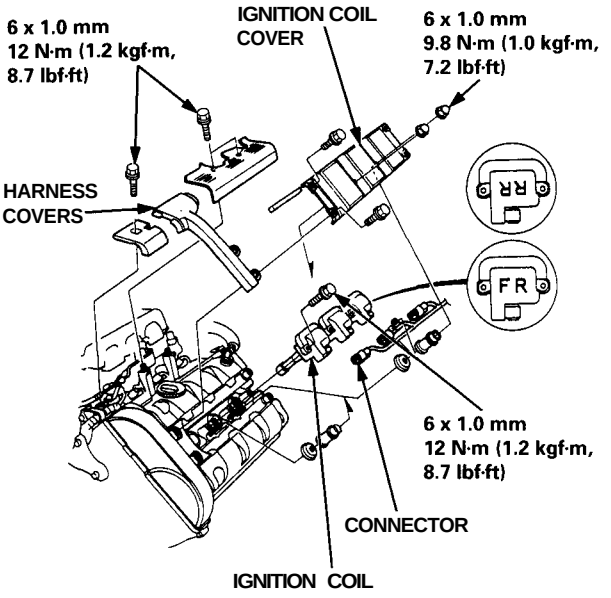

6. Remove the expansion tank.

   NOTE: Do not disconnect water hoses.

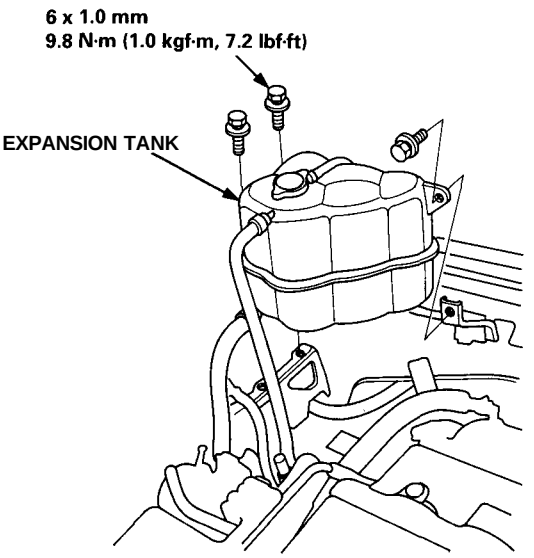

(cont'd)

Timing Belt

Removal (cont'd)

7. Remove the breather hose and the air cleaner housing (see page 6-26).

8. Disconnect the alternator connector and the terminal.

9. Remove the cover, adjusting bolt, the mounting bolt and mounting nut, then remove the alternator belt and the alternator.

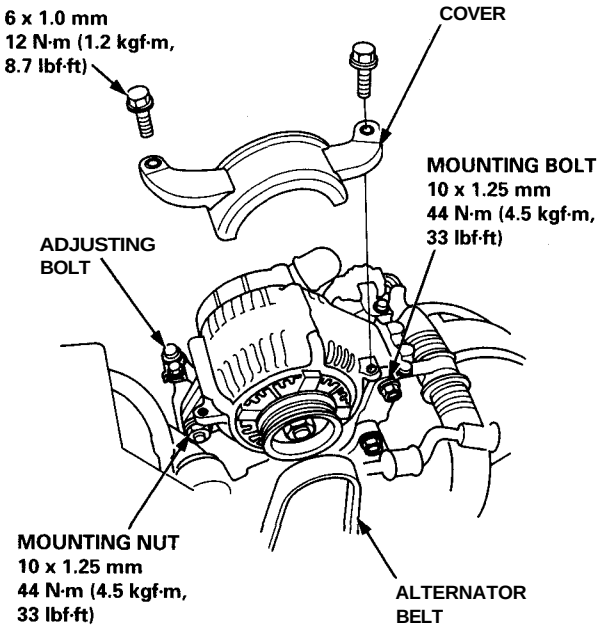

10. Remove the cylinder head covers.
    - Refer to pages 6-49, 6-50 when installing.

11. Remove the two bolts from the side engine mount near the alternator bracket. Pivot the mounting bracket into the housing of the body.

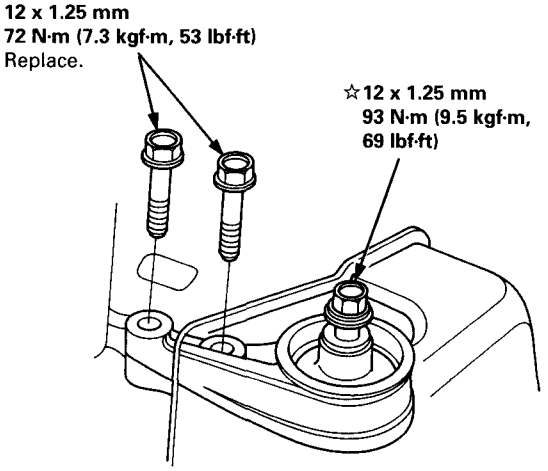

☆: CORROSION RESISTANT BOLT

12. Remove the transmission mount (see page 5-10).

13. Install a brace under the engine, then tilt the engine approximately 5° using a jack.

    NOTE: Make sure to place a cushion between the oil pan and the jack.

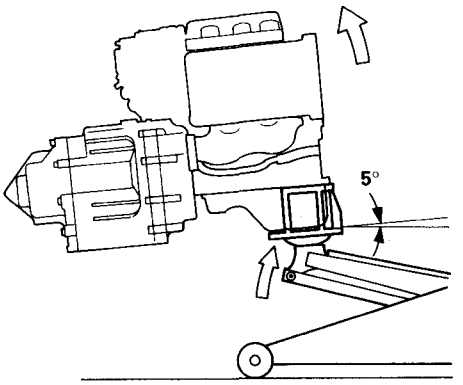

14. Remove the alternator bracket stiffener and dipstick/pipe.

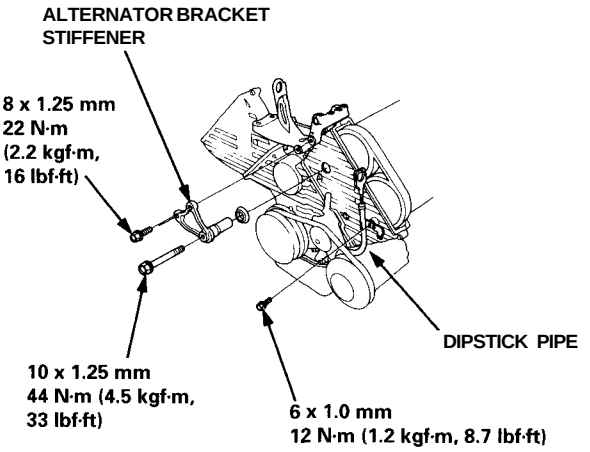

15. Loosen the idler pulley center nut and adjusting nut, then remove the air conditioning (A/C) compressor belt.

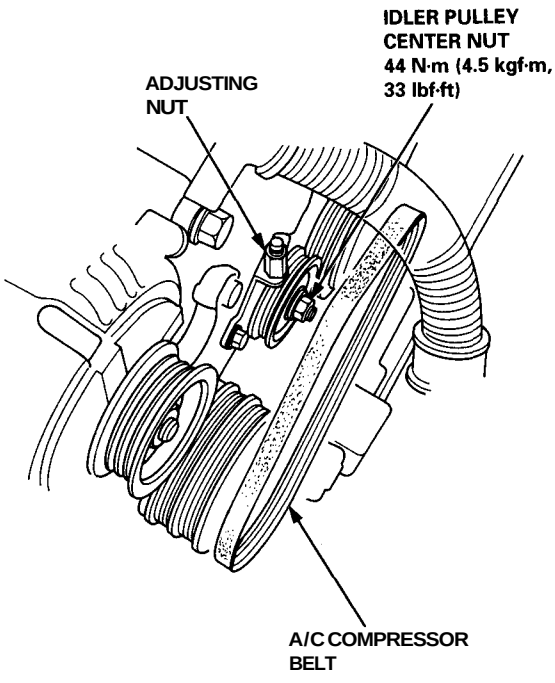

16. Remove the crankshaft pulley (see page 6-12).

17. Remove the rubber seal from the adjusting bolt, then remove the middle covers and lower cover.

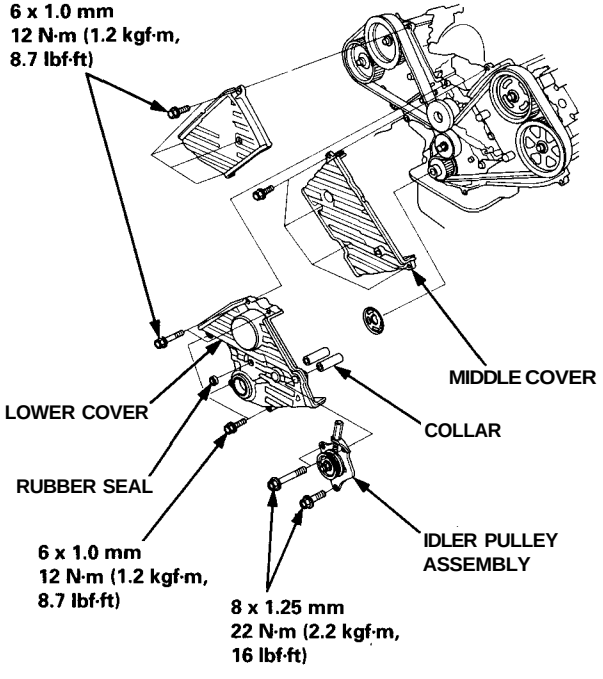

18. Loosen the adjusting bolt 180° turn. Push the tensioner to remove tension from the timing belt, then retighten the adjusting bolt.

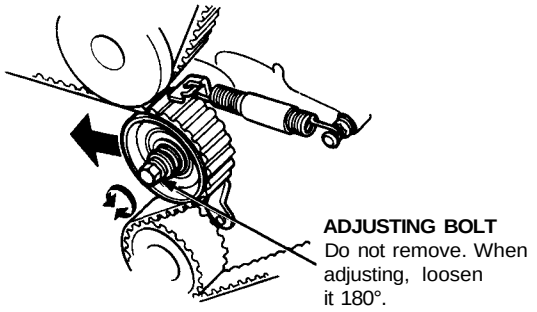

19. Remove the timing belt from the pulleys.

Timing Belt

Installation

Install the timing belt in the reverse order of removal; Only key points are described here.

NOTE: Clean the middle and lower covers before installation.

1. Set the timing belt drive pulley so that the No. 1 piston is at top dead center (TDC). Align the A mark on the teeth side of the timing belt drive pulley to the pointer on the oil pump.

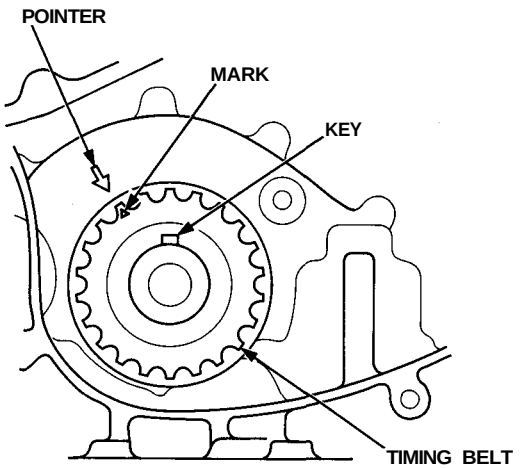

2. Set the front camshaft pulleys so that the No. 1 piston is at TDC. Align the TDC marks on the front exhaust camshaft pulley and front intake camshaft pulley to the pointer on the back cover.

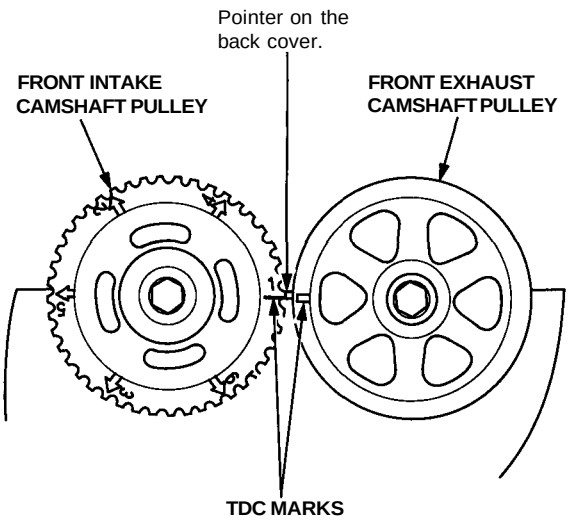

3. Set the rear camshaft pulleys so that the No. 1 piston is at TDC. Align the TDC mark on the rear intake camshaft pulley to the pointer on the back cover. Align the rear exhaust camshaft pulley one half tooth clockwise past TDC.

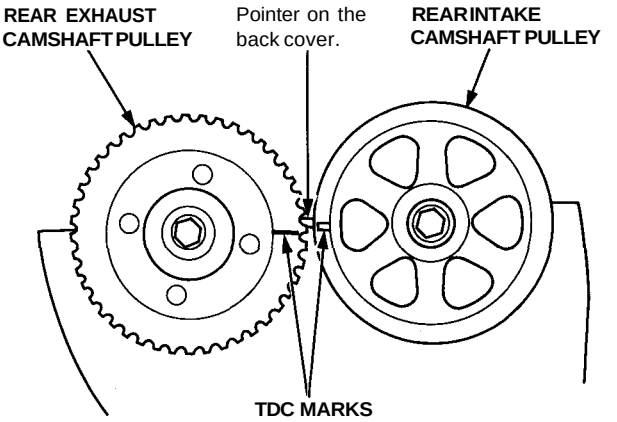

4. Install the timing belt tightly in the sequence shown.

① Timing belt drive pulley (crankshaft) → ② Adjusting pulley → ③ Front exhaust camshaft pulley → ④ Front intake camshaft pulley → ⑤ Water pump pulley → ⑥ Rear intake camshaft pulley → ⑦ Rear exhaust camshaft pulley.

NOTE: Make sure the timing belt drive pulley and camshaft pulleys are at TDC.

5. Tension the timing belt between the pulleys in the sequence A to E as shown below.

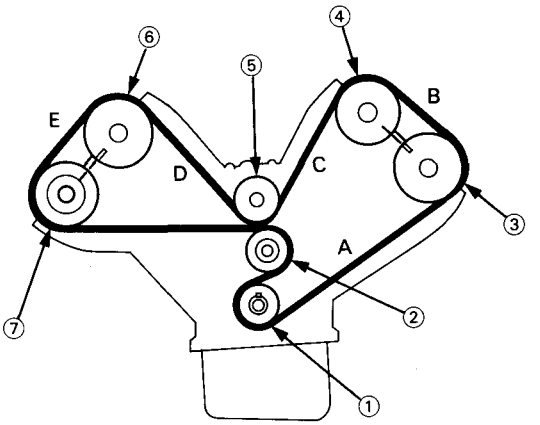

6. Adjust the timing belt (see page 6-14).

7. Install the lower cover and middle covers.

8. Install the crankshaft pulley, then tighten the pulley bolt (see page 6-12).

9. Check the crankshaft pulley and the camshaft pulleys at TDC.

   NOTE: To check the camshaft, try to insert 5.0 mm pin punches as shown when the camshaft is at TDC.

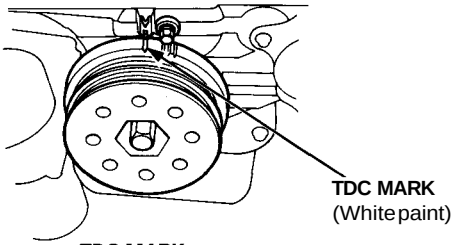

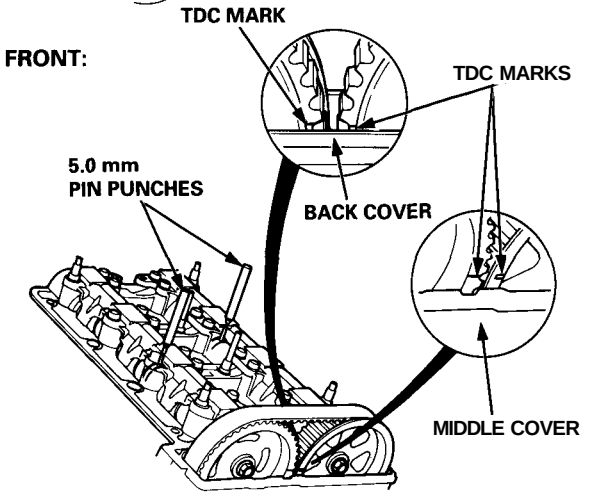

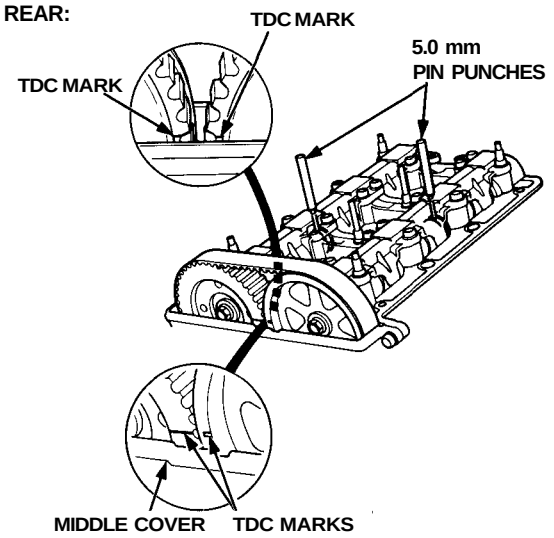

10. If a camshaft is not positioned at TDC, remove the timing belt and adjust the positioning following the procedure on page 6-18, then reinstall the timing belt.

11. After installation, adjust the tension of each belt.

    - See section 23 for alternator belt tension adjustment.
    - See section 22 for A/C compressor belt tension adjustment.

CKP/CYP Sensor

Replacement

NOTE: Turn the crankshaft so that the No. 1 piston is at top dead center (see page 6-19).

1. Remove the timing belt (see page 6-15).
2. Remove the front intake and exhaust camshaft pulleys.
3. Remove the back cover.
4. Remove the CKP/CYP sensor from the front cylinder head.
5. Install the CKP/CYP sensor in the reverse order of removal.
   - Refer to page 6-18 and 6-19, when installing the timing belt.

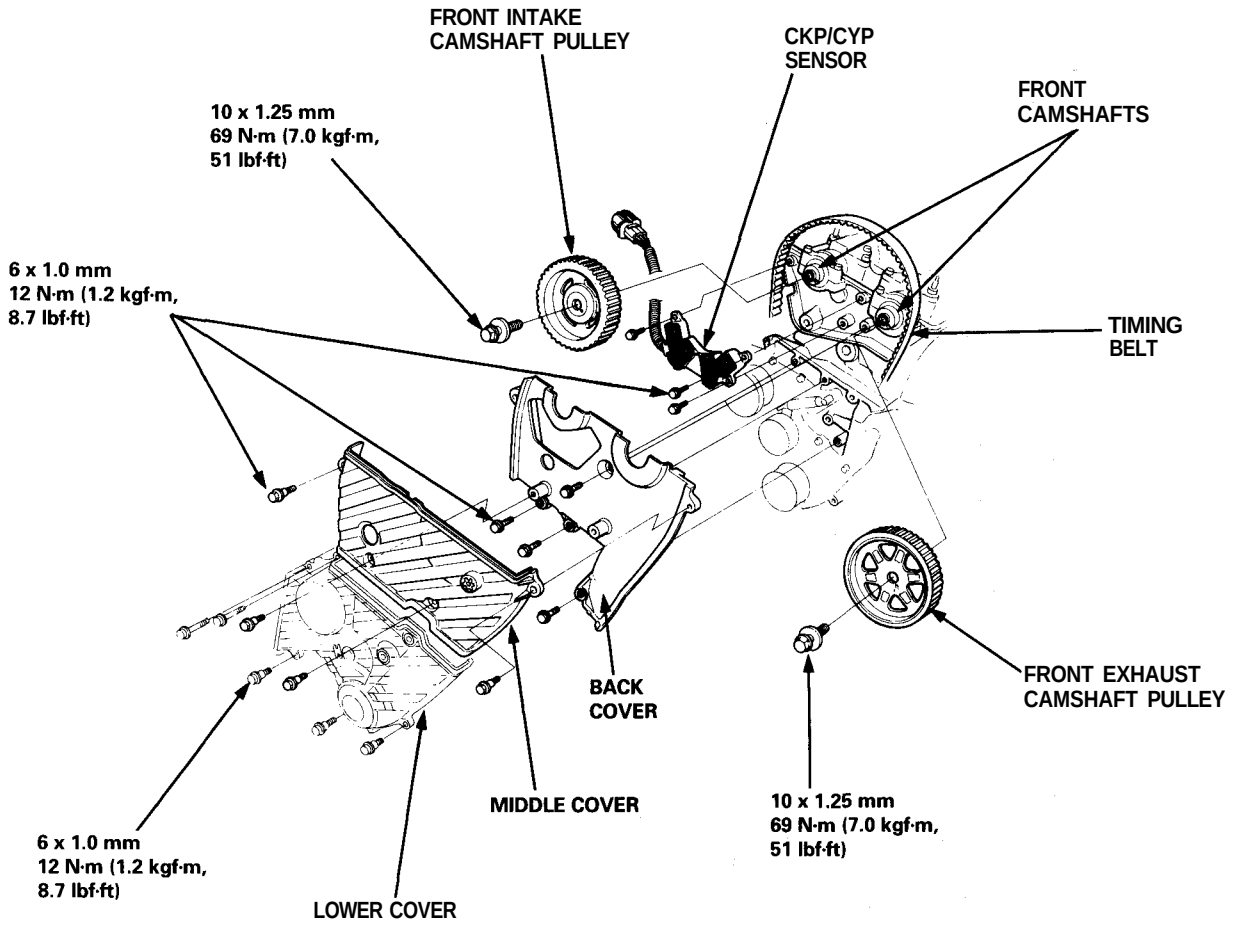

Cylinder Heads

Illustrated Index

CAUTION: To avoid damage, wait until the engine coolant temperature drops below 100°F (38°C) before removing the cylinder head.

NOTE: Use new O-rings and gaskets when reassembling.

OIL Prior to reassembling, clean all the parts in solvent, dry them, and apply lubricant to any contact parts.

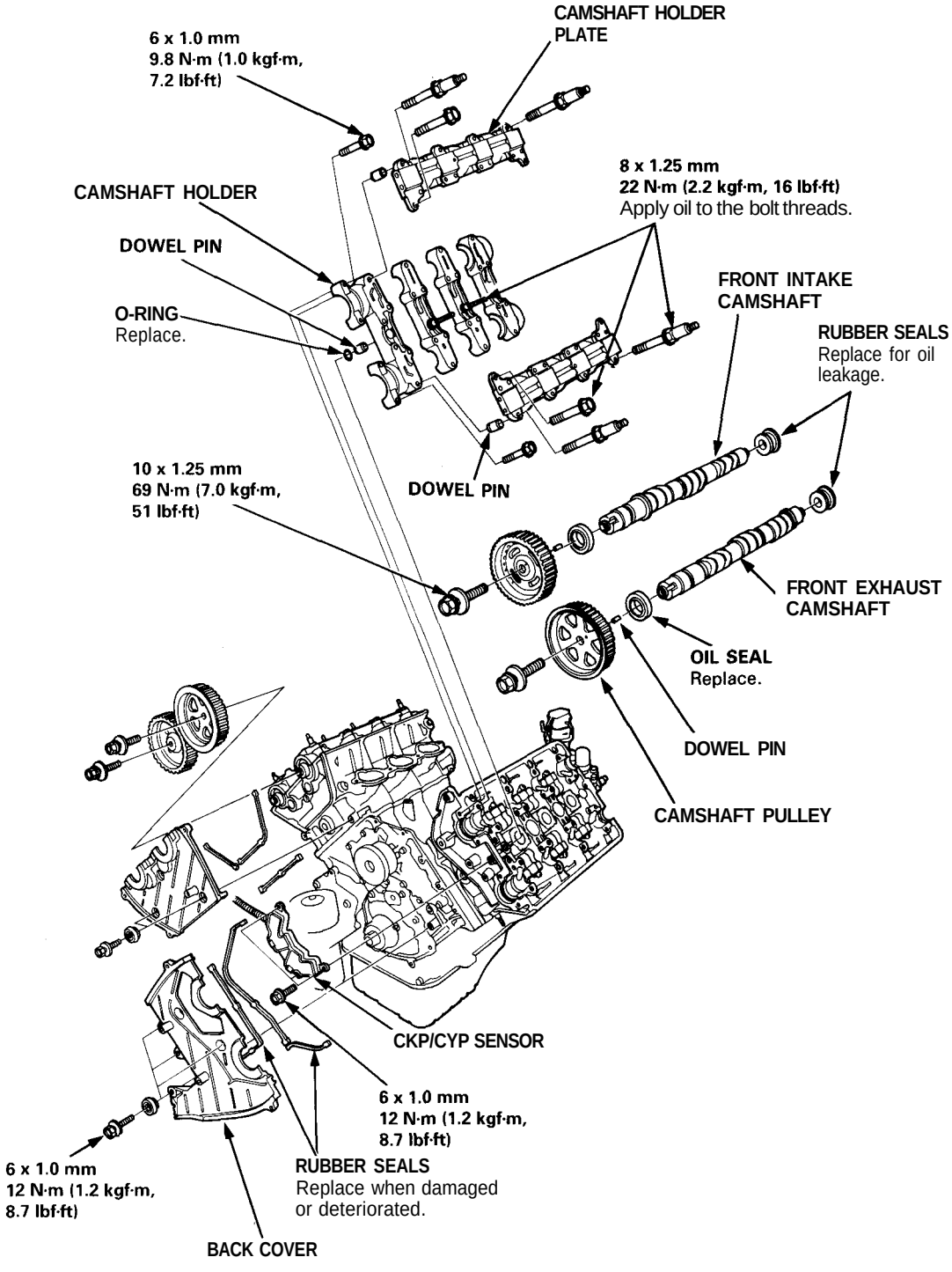

(cont'd)

Cylinder Heads

Illustrated Index (cont'd)

CAUTION: To avoid damage, wait until the engine coolant temperature drops below 100°F (38°C) before removing the cylinder head.

NOTE: Use new O-rings and gaskets when reassembling.

OIL Prior to reassembling, clean all the parts in solvent, dry them, and apply lubricant to any contact parts.

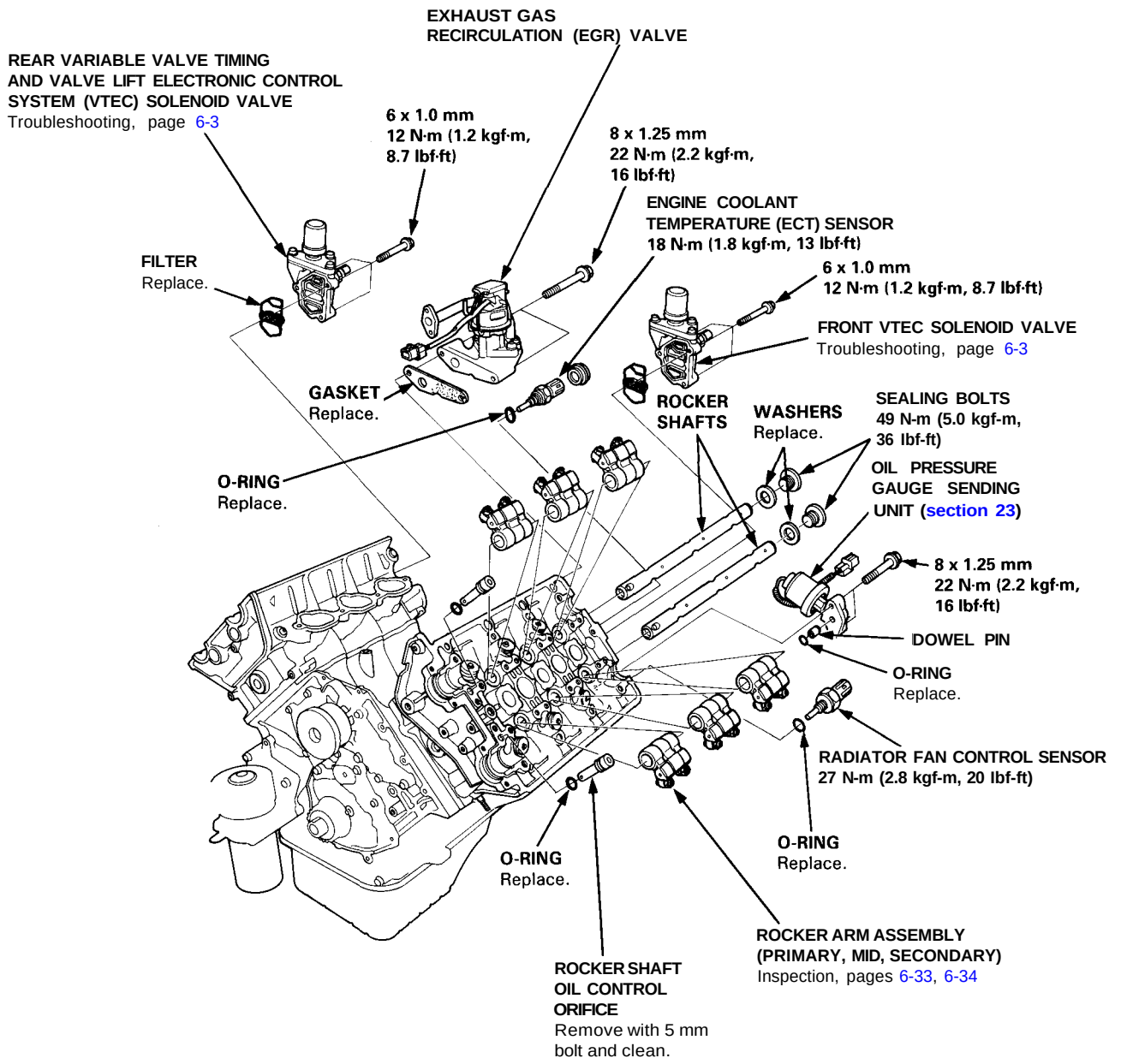

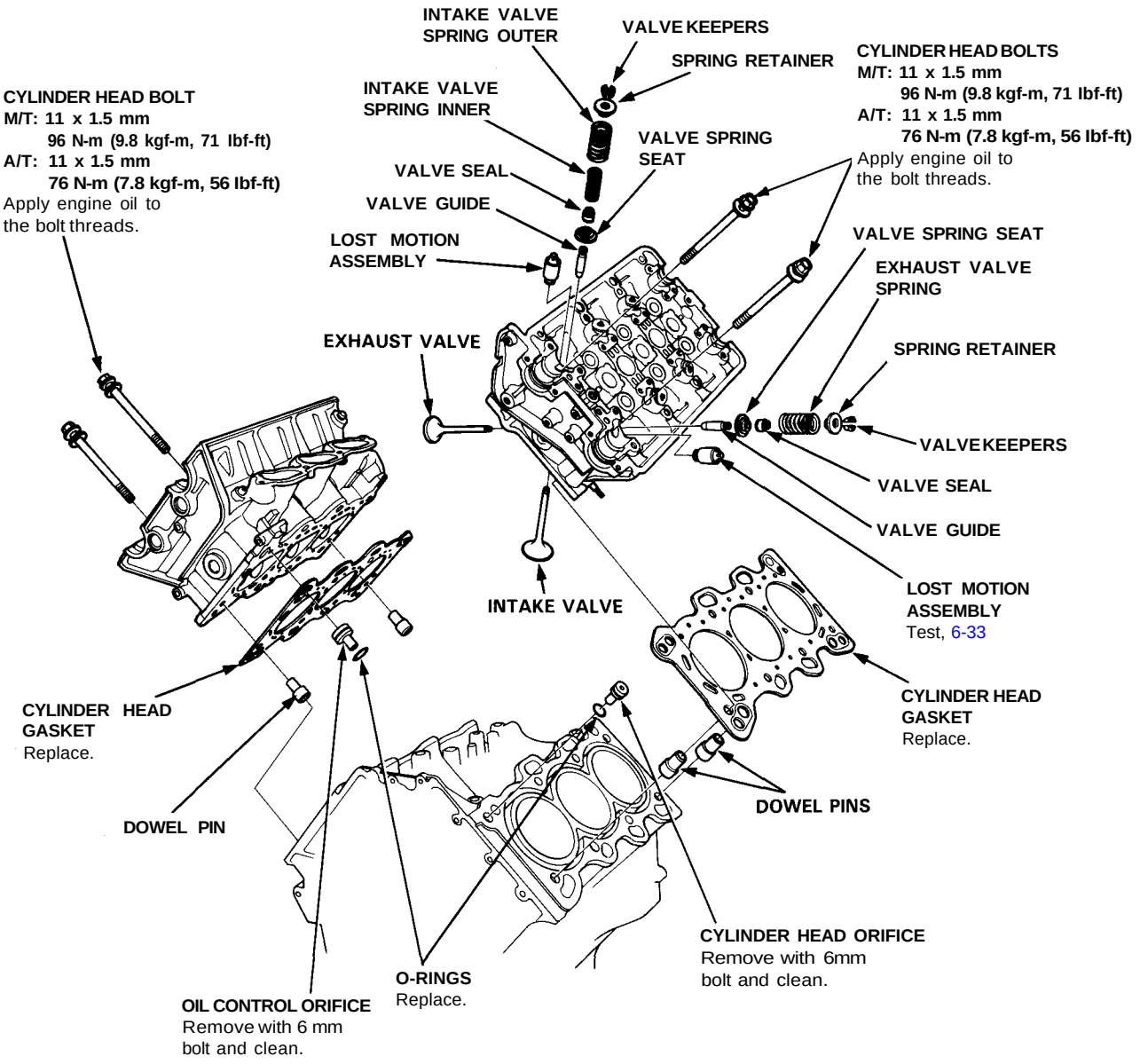
INTAKE VALVE SPRING OUTER
VALVE KEEPERS
SPRING RETAINER
CYLINDER HEAD BOLTS
M/T: 11 x 1.5 mm
96 N-m (9.8 kgf-m, 71 lbf-ft)
A/T: 11 x 1.5 mm
76 N-m (7.8 kgf-m, 56 lbf-ft)
Apply engine oil to the bolt threads.
CYLINDER HEAD BOLT
M/T: 11 x 1.5 mm
96 N-m (9.8 kgf-m, 71 lbf-ft)
A/T: 11 x 1.5 mm
76 N-m (7.8 kgf-m, 56 lbf-ft)
Apply engine oil to the bolt threads.
INTAKE VALVE SPRING INNER
VALVE SPRING SEAT
VALVE SEAL
VALVE GUIDE
LOST MOTION ASSEMBLY
VALVE SPRING SEAT
EXHAUST VALVE SPRING
EXHAUST VALVE
SPRING RETAINER
VALVE KEEPERS
VALVE SEAL
VALVE GUIDE
LOST MOTION ASSEMBLY
Test, 6-33
INTAKE VALVE
CYLINDER HEAD GASKET
Replace.
CYLINDER HEAD GASKET
Replace.
DOWEL PIN
DOWEL PINS
CYLINDER HEAD ORIFICE
Remove with 6mm bolt and clean.
O-RINGS
Replace.
OIL CONTROL ORIFICE
Remove with 6 mm bolt and clean.

Removal

Engine removal is not required for this procedure.

⚠ WARNING Make sure jacks and safety stands are placed properly and hoist brackets are attached to correct positions on the engine.

CAUTION:
- **Use a fender cover (special tool) to avoid damaging painted surfaces.**
- **Unplug the wiring connectors carefully while holding the connector portion to avoid damage.**
- **To avoid damaging the cylinder heads, wait until the engine coolant temperature drops below 100°F (38°C) before loosening the retaining bolts.**
- **Do not open the engine cover when the roof panel is stored (NSX-T open top).**

NOTE:
- Unspecified items are common.
- Mark all wiring and hoses to avoid misconnection. Also, be sure that they do not contact other wiring or hoses or interfere with other parts.
- Inspect the timing belt before removing the cylinder head.
- Turn the crankshaft pulley so that the No. 1 piston is at top dead center (see page 6-19).

1. Disconnect the negative terminal from the battery.
2. Remove the expansion tank cap.

   ⚠ WARNING Use care when removing the expansion tank cap to avoid scalding by engine coolant or steam.

3. Raise the car, then remove the right rear wheel/tire.
4. Drain the engine coolant (see page 10-5).
5. Remove the front exhaust manifold (M/T).

   -1. Remove the center rod assembly and under guard (see page 5-7).
   -2. Remove the rear beam rod assembly (see page 5-8).
   -3. Remove the front engine mount, then remove the front beam (see page 5-8).
   -4. Remove the front mount.

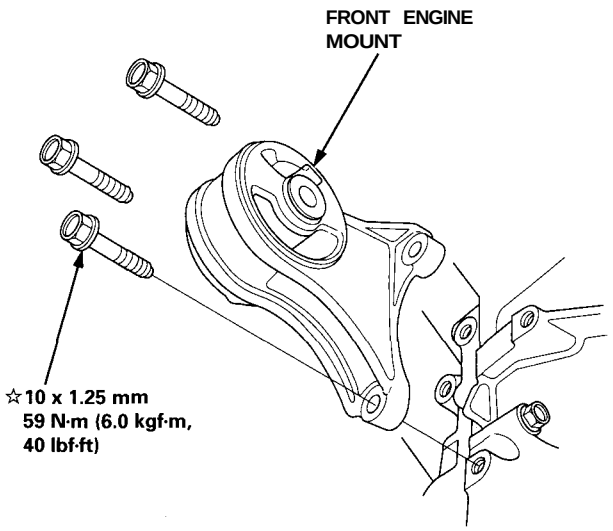

   -5. Disconnect the front primary heated oxygen sensor (front primary HO2S) connector and front secondary heated oxygen sensor (front secondary HO2S) connector, then remove the front exhaust manifold and front three way catalytic converter (TWC) assembly.

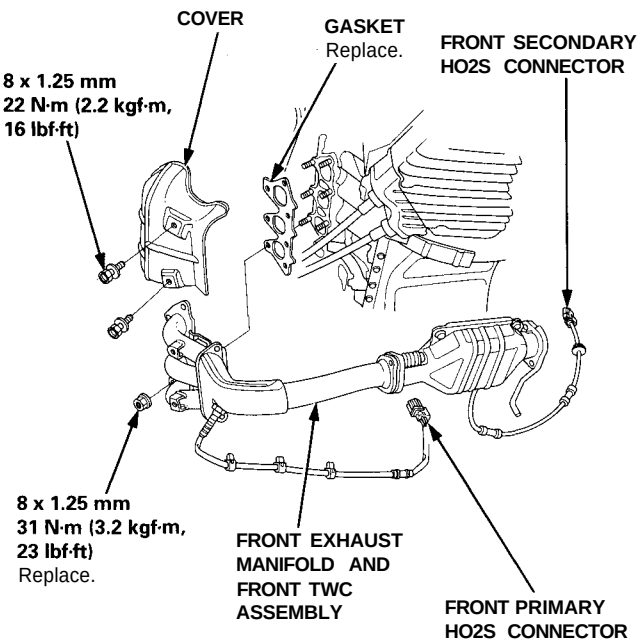

☆: CORROSION RESISTANT BOLT

6. Remove the rear exhaust manifold (M/T).

-1. Remove the muffler (see page 5-9).
-2. Remove the rear beam rod B.

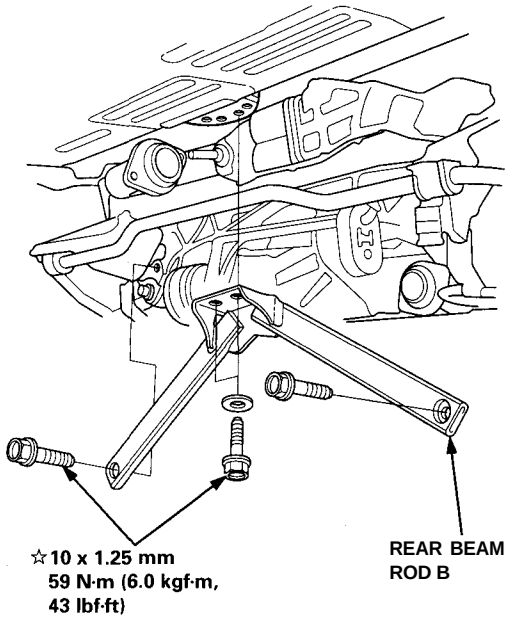

-3. Disconnect the rear secondary heated oxygen sensor (rear secondary HO2S) connector, then remove the rear TWC.
-4. Remove the rear exhaust manifold covers.
-5. Disconnect the rear primary heated oxygen sensor (rear primary HO2S) connector, then remove the rear exhaust manifold.

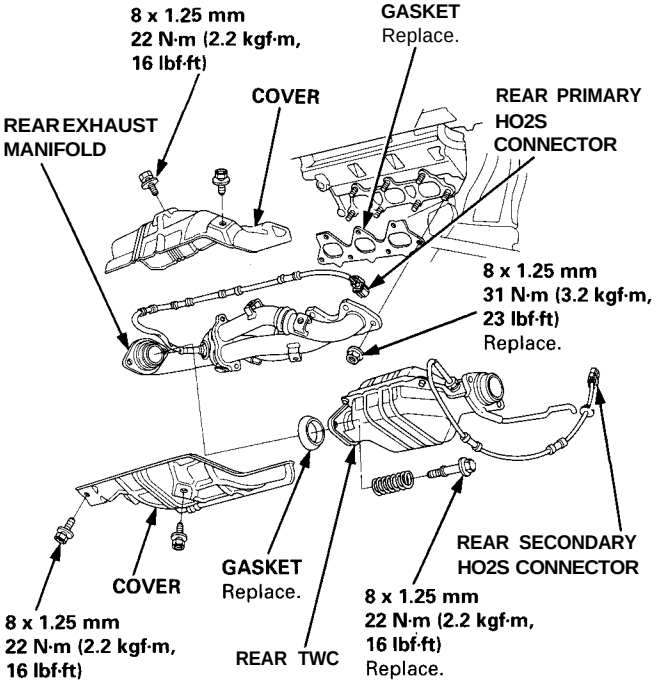

7. Remove the engine under guard, then remove the front exhaust pipe A (A/T).

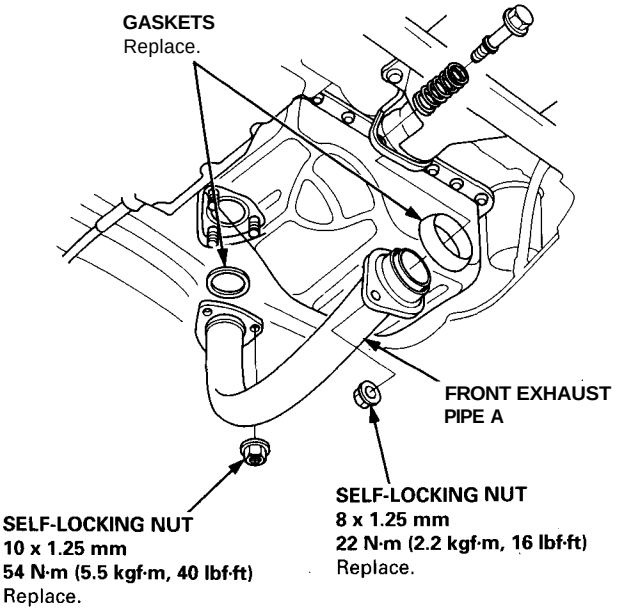

8. Remove the rear exhaust pipe A (A/T).

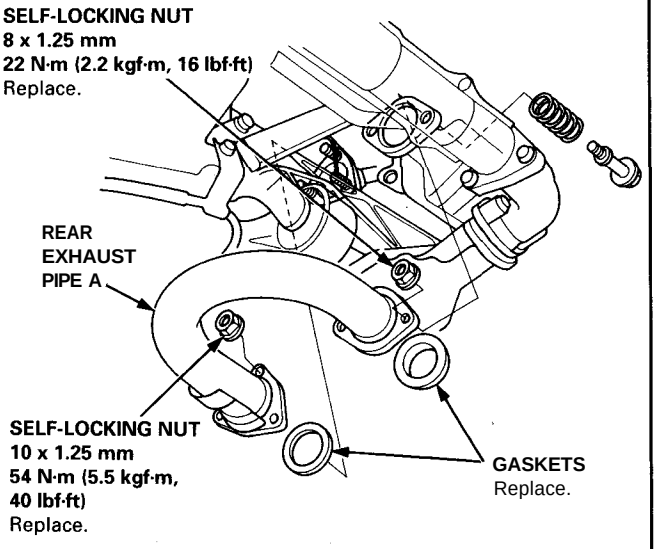

9. Remove the engine oil cooler base assembly (see page 6-15).

10. Lower the car.

11. Remove the strut brace (see page 5-3).

(cont'd)

Removal (cont'd)

12. Remove the engine cover stay from the strut brace, then set the engine cover stay between the engine cover and rear hatch latch (NSX-T open top).

CAUTION: Use a shop towel to avoid damaging painted surfaces.

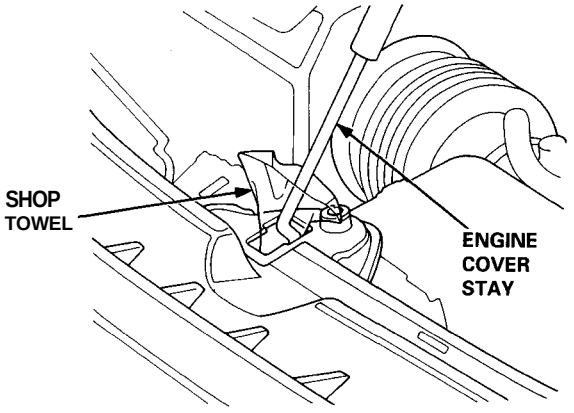

13. Relieve fuel pressure (see section 11).

⚠ WARNING Do not smoke while working on fuel system; keep open flame or spark away from work area. Drain fuel only into an approved container.

14. Remove the fuel feed pipe and fuel return hose (see page 5-5).

15. Remove the evaporative emission (EVAP) control canister hose and brake booster vacuum hose (see page 5-5).

16. Disconnect the breather pipe and vacuum hose, then remove the air cleaner housing.

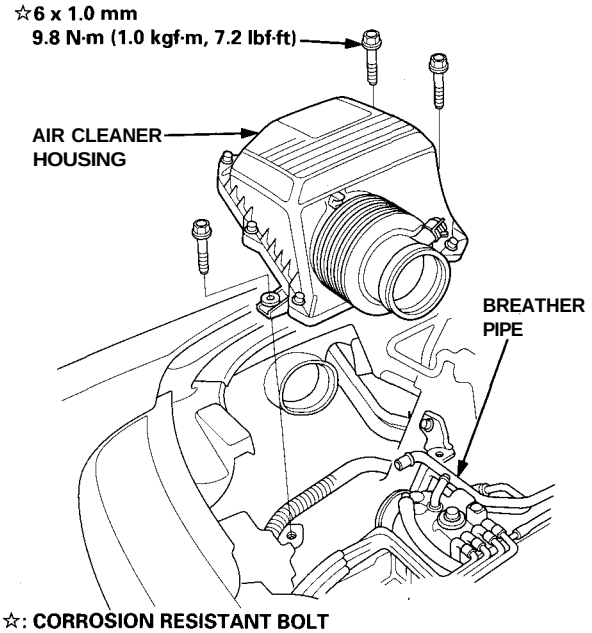

17. Remove the hoses, then remove the expansion tank (see page 5-5).

18. Remove the radiator hoses and heater hose (see page 5-6).

19. Disconnect the two connectors, then remove the control box (see page 5-6).

20. Remove the intake manifold plate and top cover.

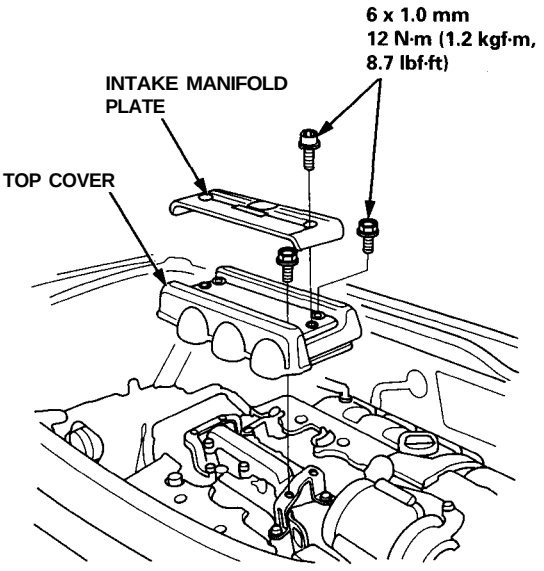

21. Remove the fuel injector covers.

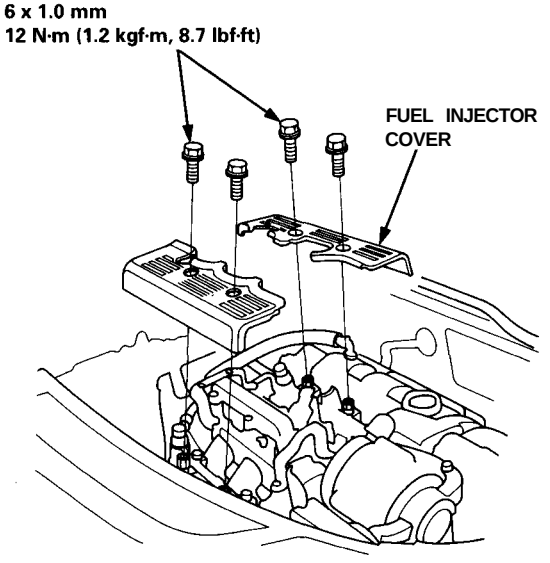

22. Remove the breather hose, positive Crankcase ventilation (PCV) hose and vacuum hose.

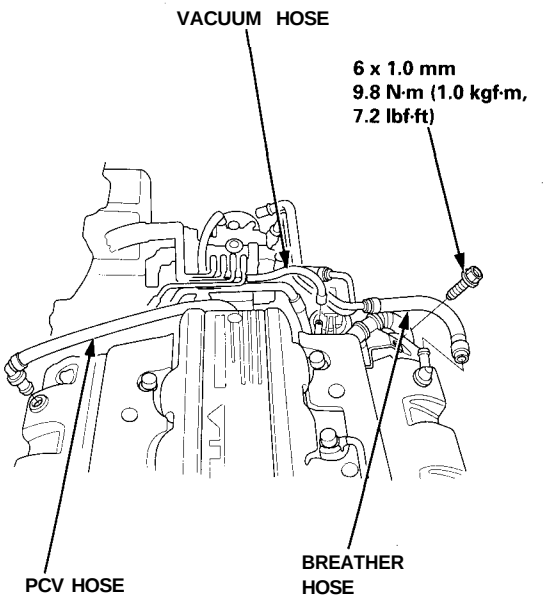

23. Remove the ignition coil cover and harness cover.

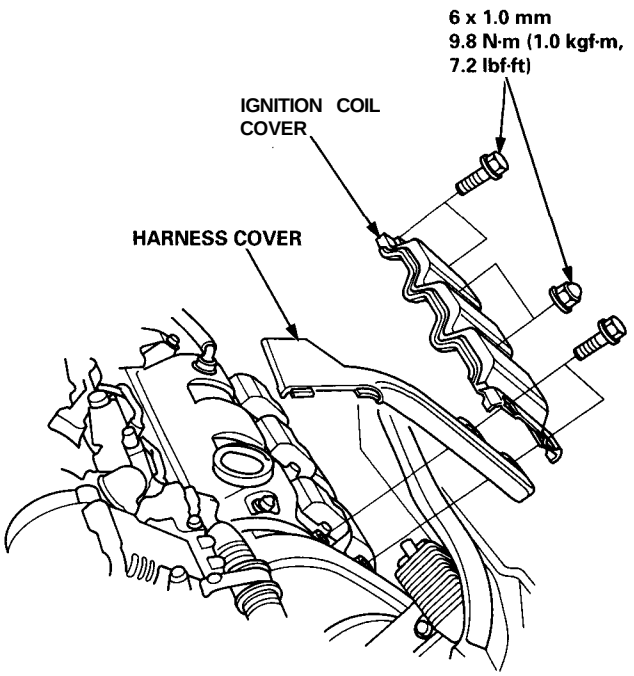

24. Remove the water bypass hoses.

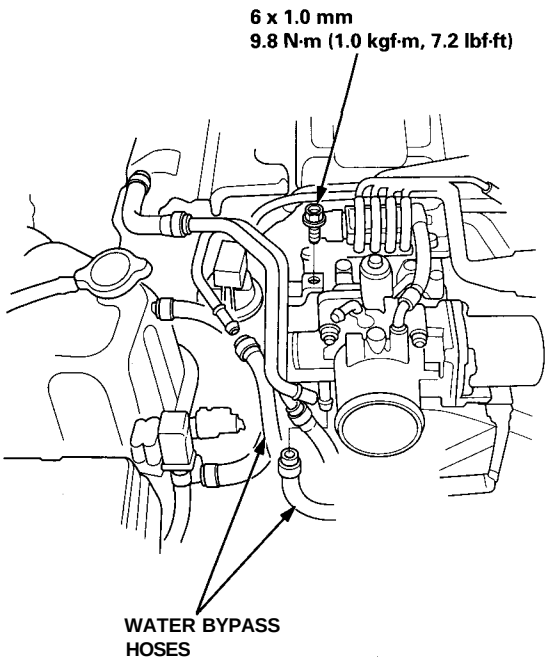

25. Remove the harness covers and ground cables from the intake manifold.

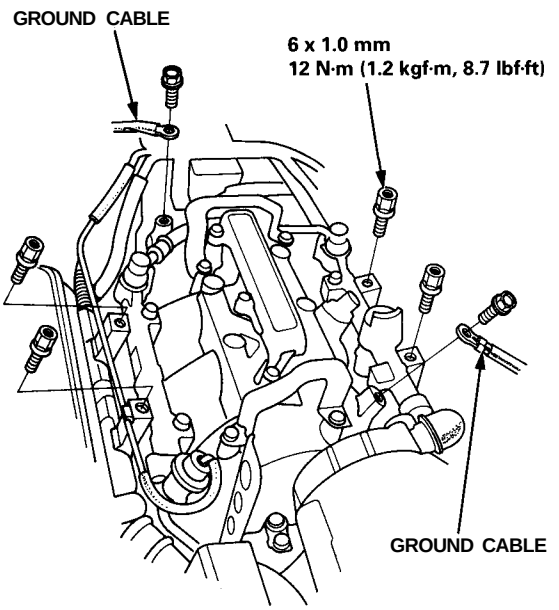

(cont'd)

Removal (cont'd)

26. Remove the engine wire harness connectors and wire harness clamps from the cylinder head and intake manifold.
    - Six injector connectors
    - Intake air temperature (IAT) sensor connector
    - CKP/CYP sensor connector
    - Heated oxygen sensor (HO2S) connectors
    - Ignition control module (ICM) connectors
    - Engine coolant temperature (ECT) sensor connector
    - Coolant temperature gauge sending unit connector
    - Radiator fan control sensor connector
    - Exhaust gas recirculation (EGR) valve lift sensor connector
    - Throttle position sensor connector
    - Engine oil pressure gauge sending unit connector
    - Knock sensor connector
    - VTEC solenoid valve connectors
    - VTEC pressure switch connectors
    - Engine oil pressure switch connector
    - Alternator connector
    - Alternator terminal
    - Throttle body 6P connector

27. Remove the ignition coils and connector.

28. Remove the EGR pipe and intake manifold assembly.

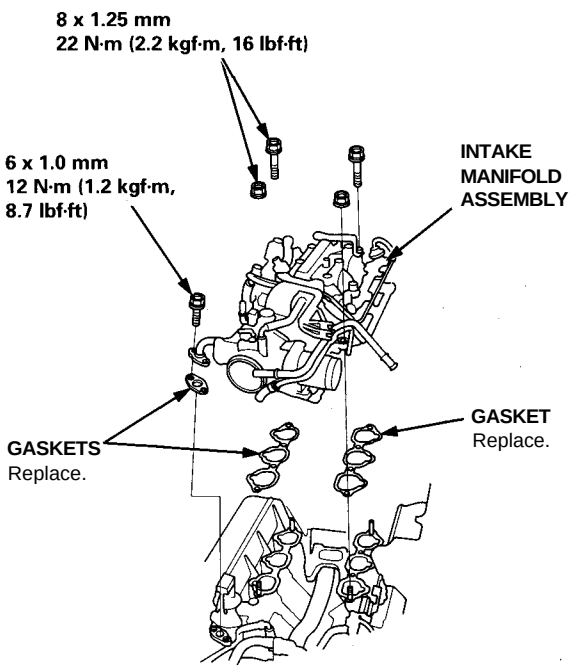

29. Loosen the adjusting nut and idler pulley center nut, then remove the air conditioning compressor belt (see page 6-17).

30. Remove the cover, adjusting bolt, mounting bolt and mounting nut, then remove the alternator belt and alternator.

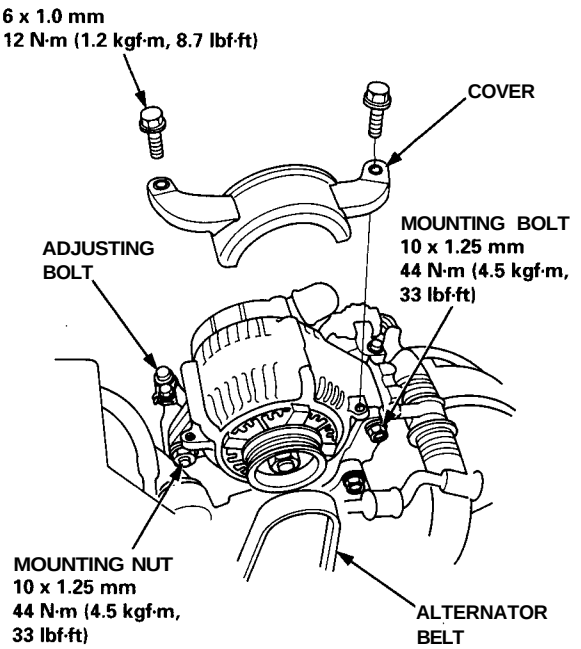

31. Disconnect the knock sensor connector, then remove the wire holder.

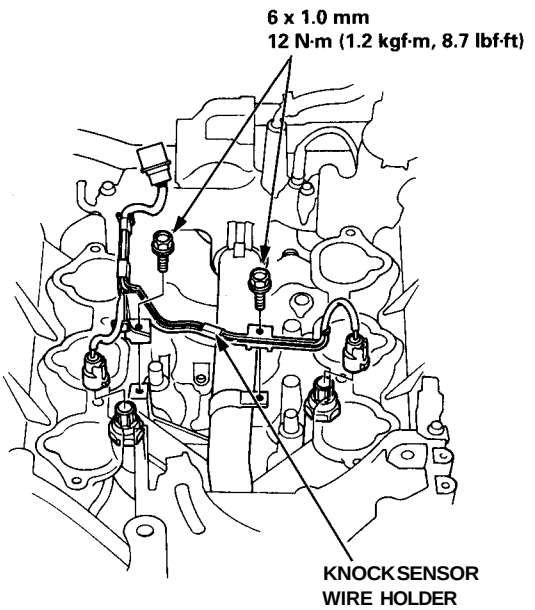

32. Remove the water passage.

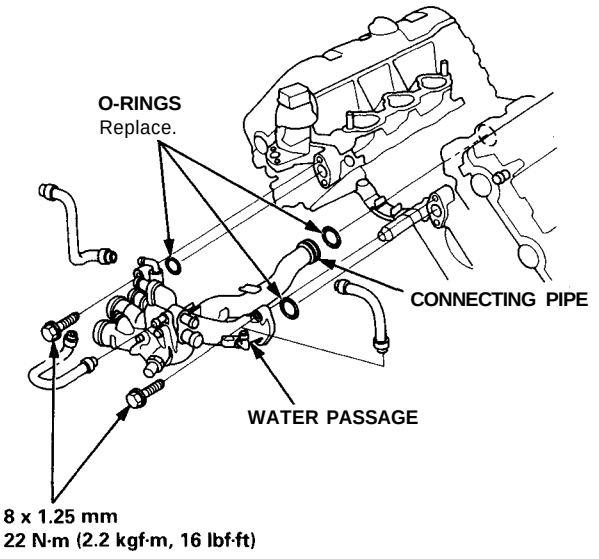

33. Remove the cylinder head covers.

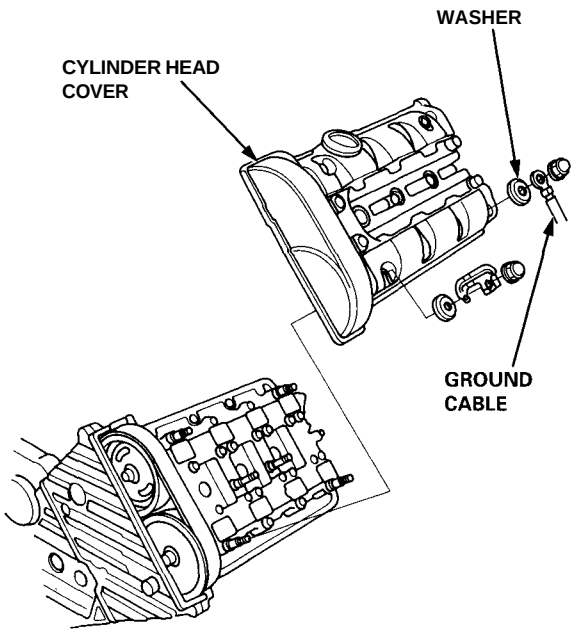

34. Remove the alternator bracket stiffener (see page 6-16).

35. Remove the alternator bracket.

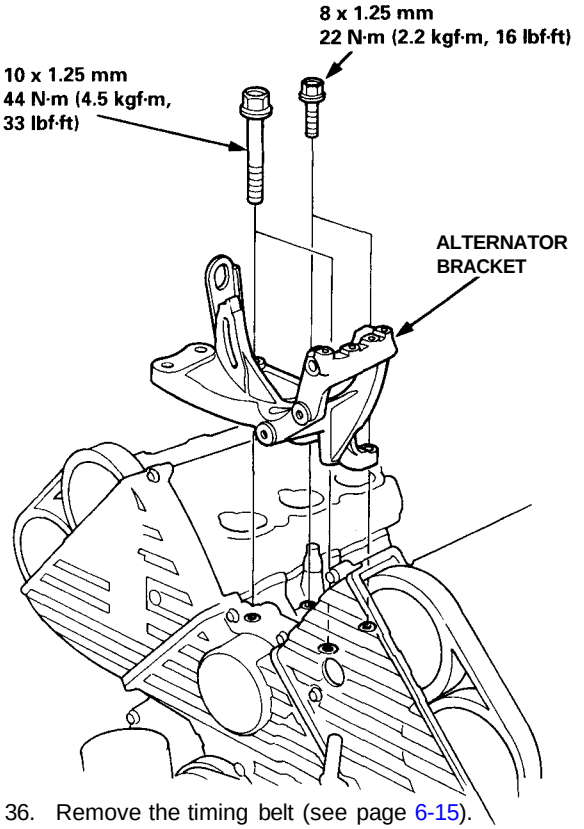

36. Remove the timing belt (see page 6-15).

37. Remove the camshaft pulleys.

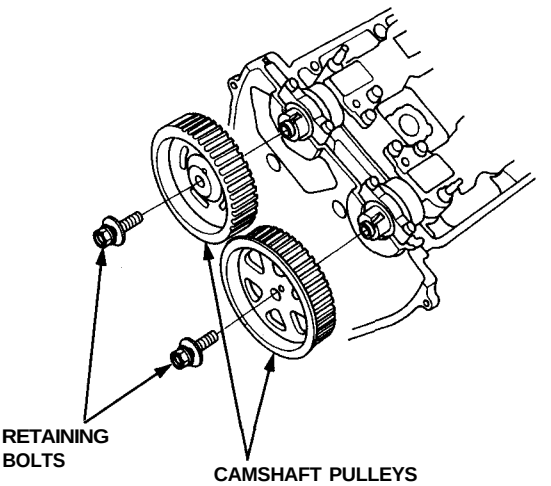

(cont'd)

Removal (cont'd)

38. Remove the front and rear back covers.

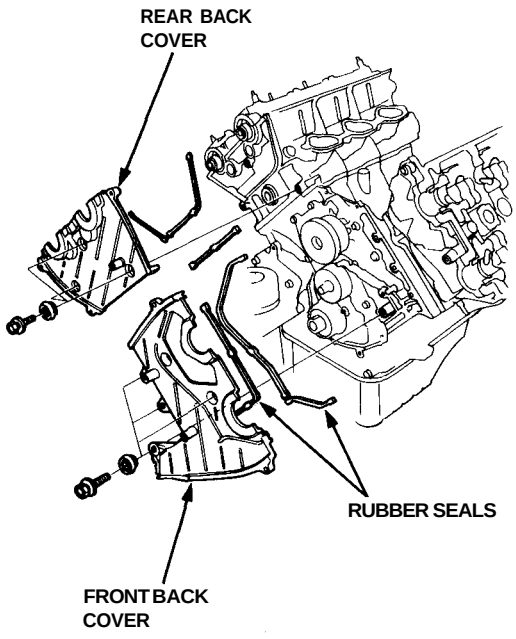

39. Loosen the rocker arm locknuts and the adjusting screws.

40. Remove the camshaft holder plates, camshaft holders and camshafts.

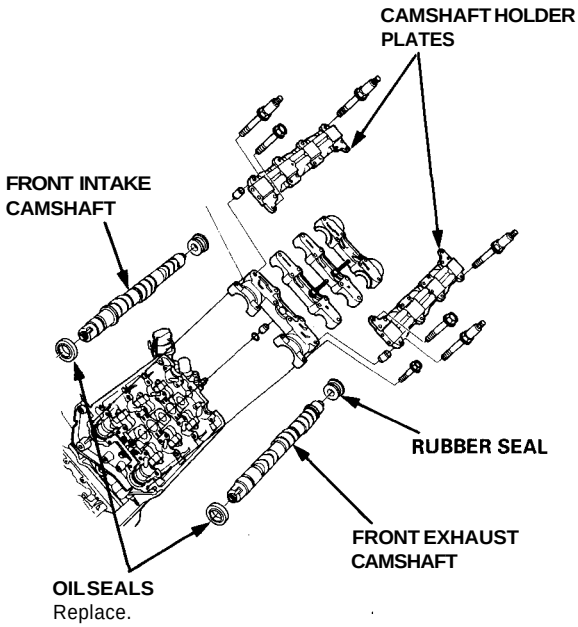

41. Remove the cylinder head bolts, then remove the cylinder head.

CAUTION: To prevent warpage, unscrew the bolts in sequence 1/3 turn at a time; repeat the sequence until all bolts are loosened.

CYLINDER HEAD BOLTS LOOSENING SEQUENCE

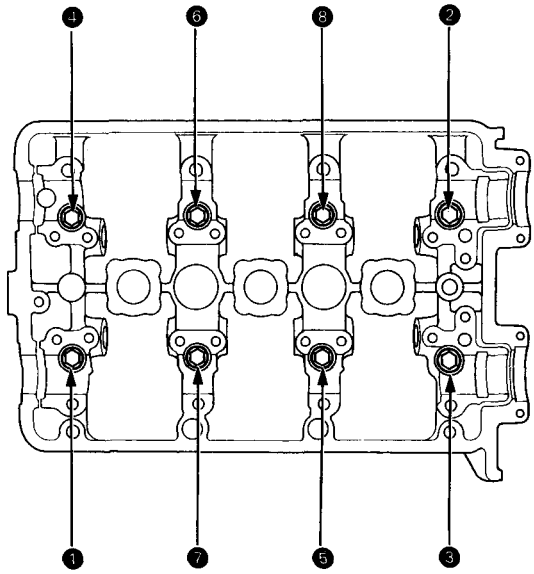

NOTE: Separate the cylinder head from the block with a flat blade screwdriver as shown.

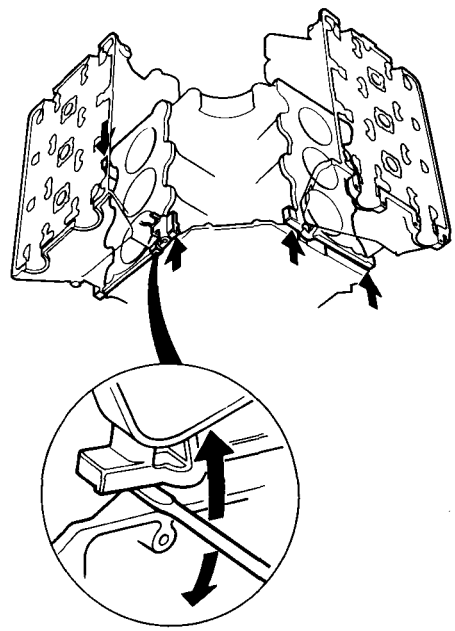

42. Remove the front and rear exhaust manifolds (A/T see page 9-5).

Rocker Arms and Shafts

Removal

1. Screw a 5 mm bolt into each rocker shaft oil control orifice, then pull out the rocker shaft oil control orifices.

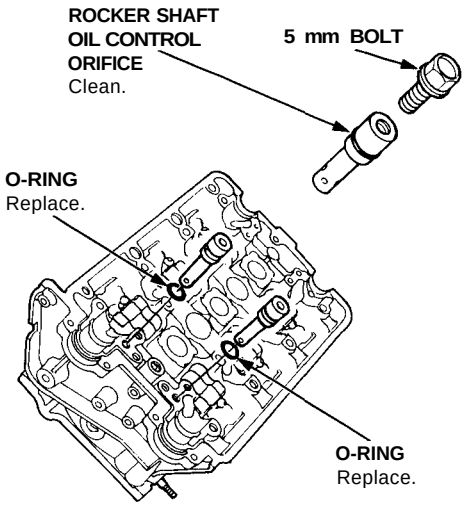

2. Remove the VTEC solenoid valve, then remove the sealing bolts.

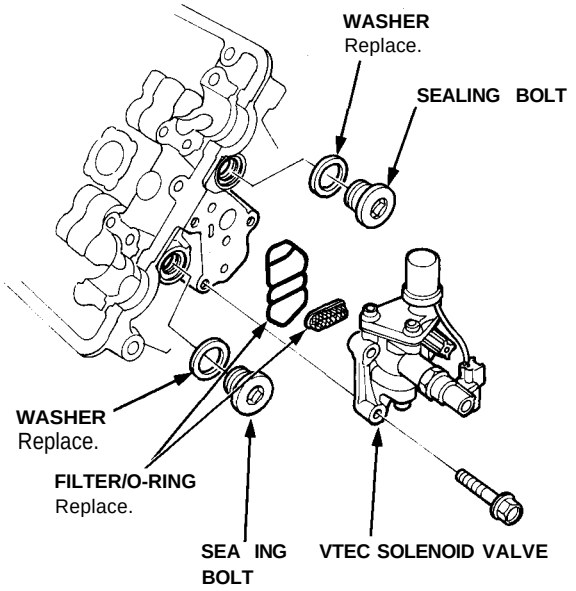

3. Bundle the rocker arms with rubber bands to keep them together as sets.

4. Screw a 12 x 1.25 mm bolt into each rocker shaft. Remove the rocker arms while slowly pulling the rocker shafts out of the cylinder heads toward the transmission end.

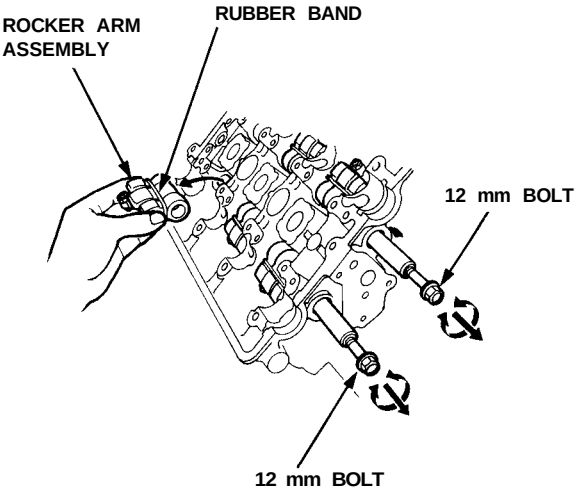

Rocker Arms and Shafts

Disassembly/Reassembly

CAUTION: After installing the rocker shaft orifice, try to turn the rocker shaft to make sure that the orifice has been inserted in the hole of the rocker shaft correctly. If the orifice is in place, it should not turn.

NOTE:

- Identify parts as they are removed to ensure reinstallation in original locations.
- Inspect rocker shafts and rocker arms (see pages 6-33 and 6-34).
- Rocker arms must be installed in the same position if reused.
- Adjust the rocker arms after torquing the cylinder head bolts.

OIL Prior to reinstalling, clean all the parts in solvent, dry them, and apply lubricant to any contact surfaces.

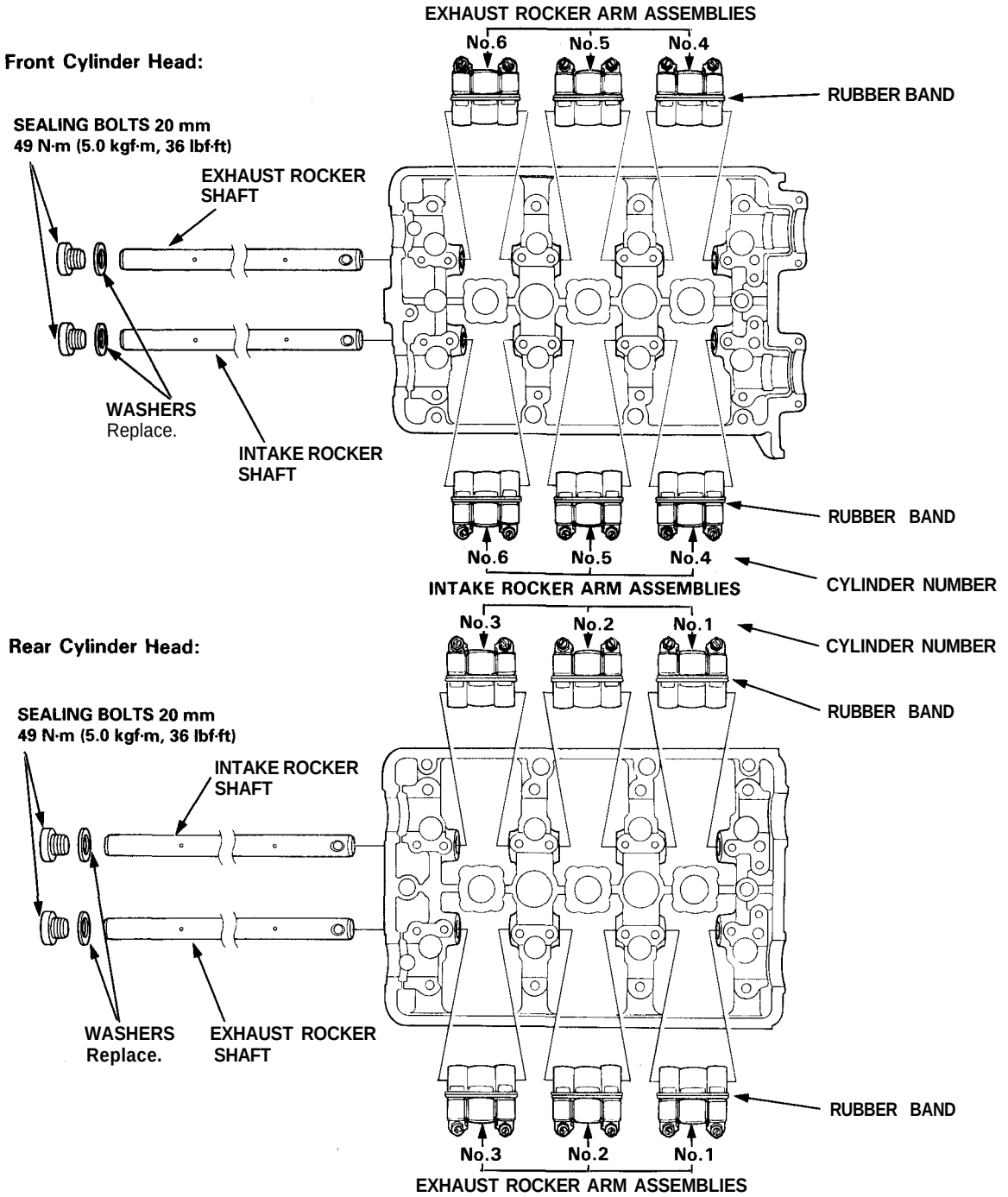

Inspection

NOTE: When reassembling the primary rocker arm, carefully apply air pressure to the oil passage of the rocker arm.

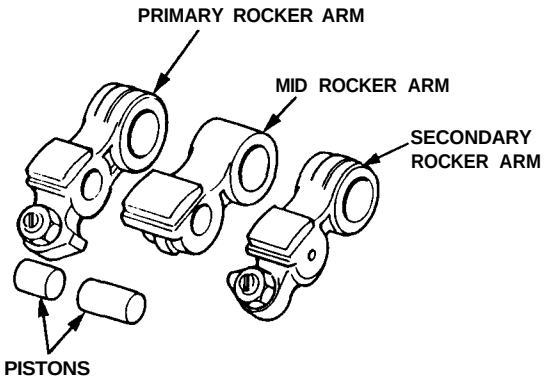

1. Inspect the rocker arm pistons. Push them manually.
   — If they do not move smoothly, replace the rocker arm assembly.

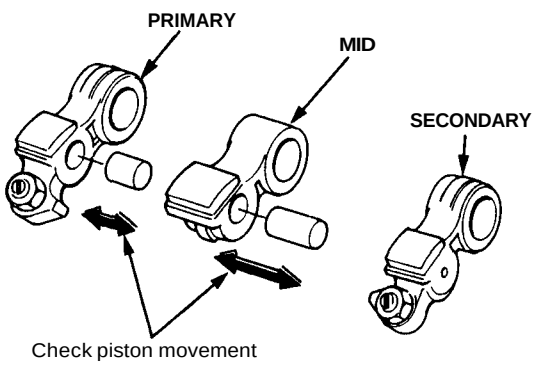

NOTE:
- Apply oil to the pistons when reassembling.
- Bundle the rocker arms with rubber bands to keep them together as sets.

2. Remove the lost motion assembly from the cylinder head and inspect it. Pushing it gently with the finger will cause it to sink slightly. Increasing the force on it will cause it to sink deeper.
   — If the lost motion assembly does not move smoothly, replace it.

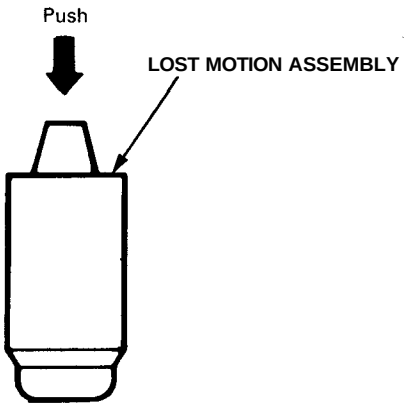

Rocker Arms and Shafts

Clearance

Measure both the intake rocker shafts and exhaust rocker shafts.

1. Measure diameter of shaft at first rocker location.

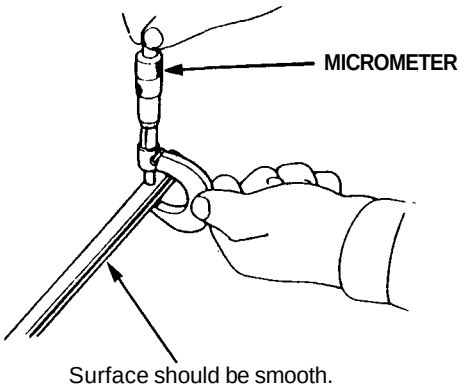

2. Zero gauge to shaft diameter.

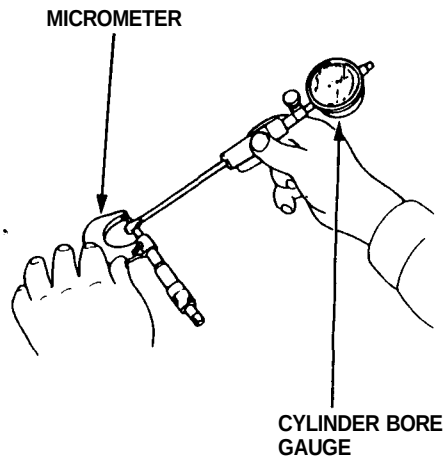

3. Measure inside diameter of rocker arm, and check for out-of-round condition.

Rocker Arm-to-Shaft Clearance (Intake and Exhaust):
Standard (New):
Primary and Secondary:
0.025-0.052 mm (0.0010-0.0020 in)
Mid:
0.024-0.053 mm (0.0009-0.0021 in)
Service Limit: 0.08 mm (0.003 in)

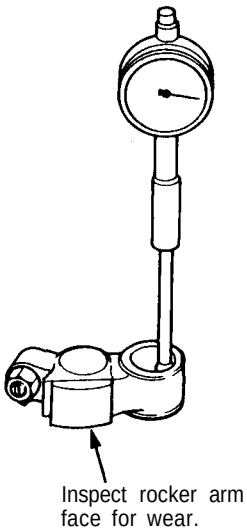

Repeat for all rockers.
— If over limit, replace rocker shaft and all over-tolerance rocker arms.

NOTE: If any rocker arm needs replacement, replace all three rocker arms in that set (primary, mid, and secondary).

Inspection

NOTE:
- Do not rotate the camshaft during inspection.
- Remove the rocker arms and rocker shafts.

1. Put the camshafts, the camshaft holders and holder plates on the cylinder head, and then tighten the bolts to the specified torque.
   NOTE: Apply clean engine oil to 8 mm bolt threads.
   Specified torque:
   ① – ㉔ 8 mm x 1.25 mm bolts:
   22 N-m (2.2 kgf-m, 16 lbf-ft)
   ㉕ – ㉘ 6 mm x 1.0 mm bolts:
   9.8 N-m (1.0 kgf-m, 7.2 lbf-ft)

   CAMSHAFT HOLDER BOLTS TORQUE SEQUENCE

FRONT:

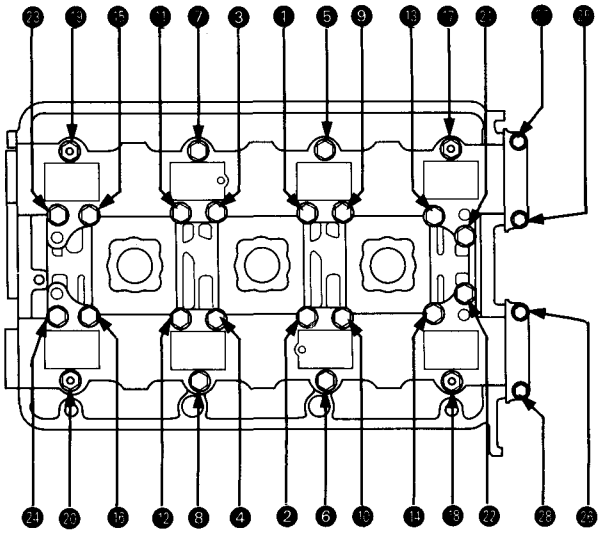

REAR:

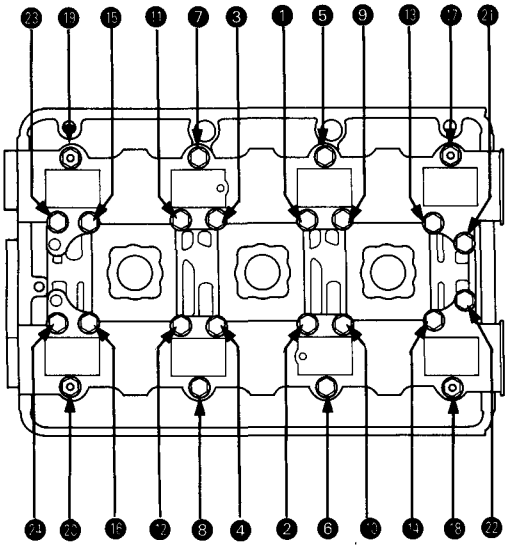

2. Seat the camshaft by pushing it toward the left end of cylinder head.

3. Zero the dial indicator against the left end, then push the camshaft back and forth, and read the end play.

   Camshaft End Play:
   Standard (New): 0.05 - 0.15 mm (0.002 - 0.006 in)
   Service Limit: 0.5 mm (0.02 in)

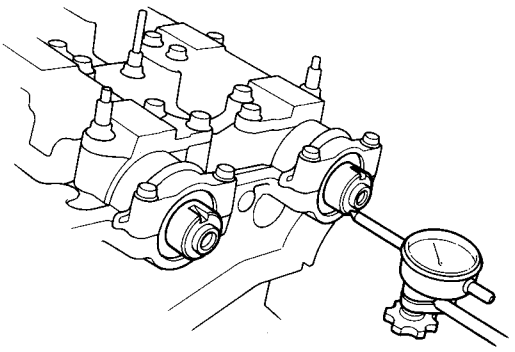

4. Remove the bolts, then remove the camshaft holders from the cylinder head.

5. Lift the camshaft out of the cylinder head, wipe it clean, then inspect the lift ramps. Replace the camshaft if lobes are pitted, scored, or excessively worn.

6. Clean the camshaft bearing surfaces in the cylinder head, then set the camshaft back in place.

7. Insert a plastigage strip across each journal.

8. Install the camshaft holders, and then tighten the bolts to the specified torque as shown in the left column on this page.

(cont'd)

Inspection (cont'd)

9. Remove the camshaft holders and measure widest portion of plastigage on each journal.

Camshaft-to-Holder Oil Clearance:
Standard (New): 0.050 - 0.089 mm (0.002 - 0.004 in)
Service Limit: 0.15 mm (0.006 in)

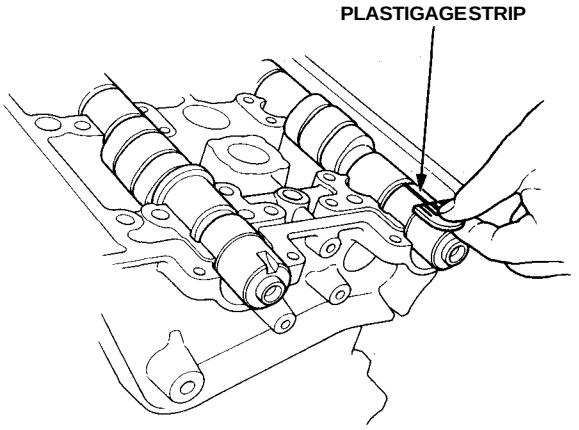

10. If camshaft-to-holder oil clearance is out of tolerance:
— And camshaft has already been replaced, you must replace the cylinder head.
— If camshaft has not been replaced, first check total runout with the camshaft supported on V-blocks.

Camshaft Total Runout:
Standard (New): 0.03 mm (0.0012 in) max.
Service Limit: 0.04 mm (0.0016 in)

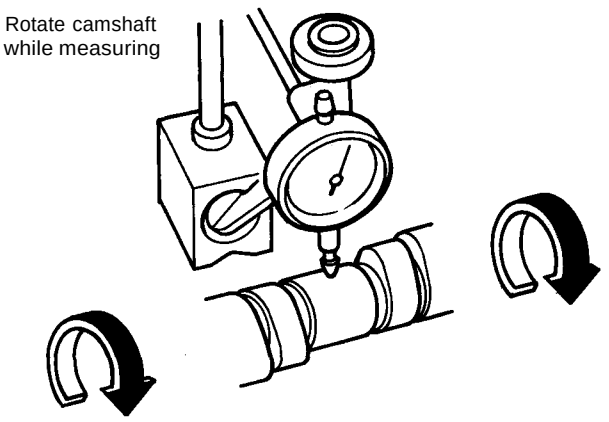

— If the total runout of the camshaft is within tolerance, replace the cylinder head.
— If the total runout is out of tolerance, replace the camshaft and recheck. If the oil clearance is still out of tolerance, replace the cylinder head.

11. Check cam lobe height wear.

Cam Lobe Height Standard (New):
M/T

	INTAKE	EXHAUST
PRIMARY	37.086 mm (1.4601 in)	36.559 mm (1.4393 in)
MID	38.037 mm (1.4975 in)	37.398 mm (1.4724 in)
SECONDARY	37.326 mm (1.4695 in)	36.741 mm (1.4465 in)

A/T

	INTAKE	EXHAUST
PRIMARY	37.266 mm (1.4672 in)	36.559 mm (1.4393 in)
MID	37.655 mm (1.4825 in)	37.398 mm (1.4724 in)
SECONDARY	37.504 mm (1.4765 in)	36.741 mm (1.4465 in)

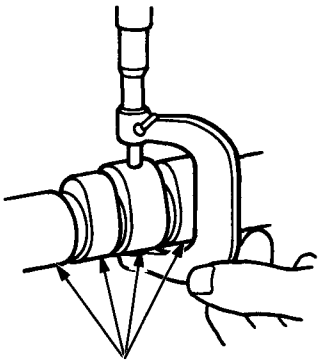

Check this area for wear.

Cam position
P: Primary M: Mid S: Secondary

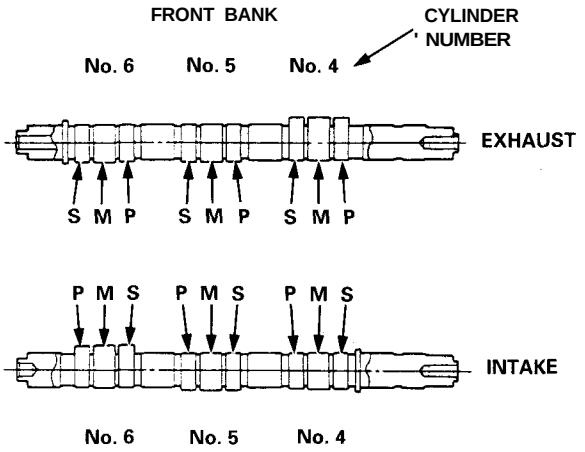

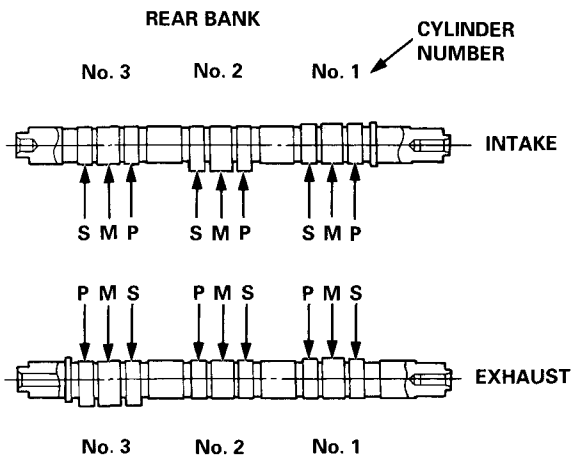

Replacement

NOTE: Identify valves and valve springs as they are removed so that each item can be reinstalled in its original position.

1. Using an appropriate-sized socket and plastic mallet, lightly tap the valve retainer to loosen the valve keepers before installing the valve spring compressor.

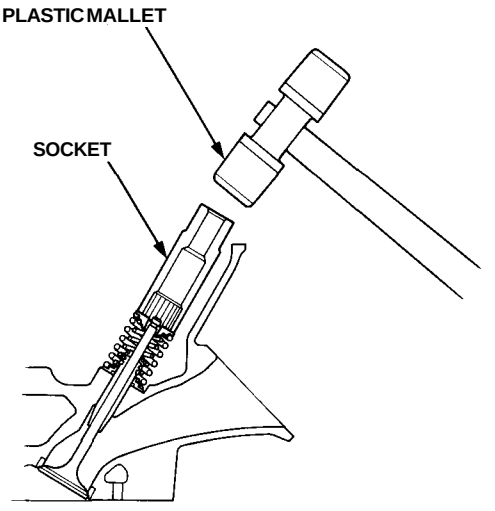

2. Install the spring compressor. Compress the spring and remove valve keeper.

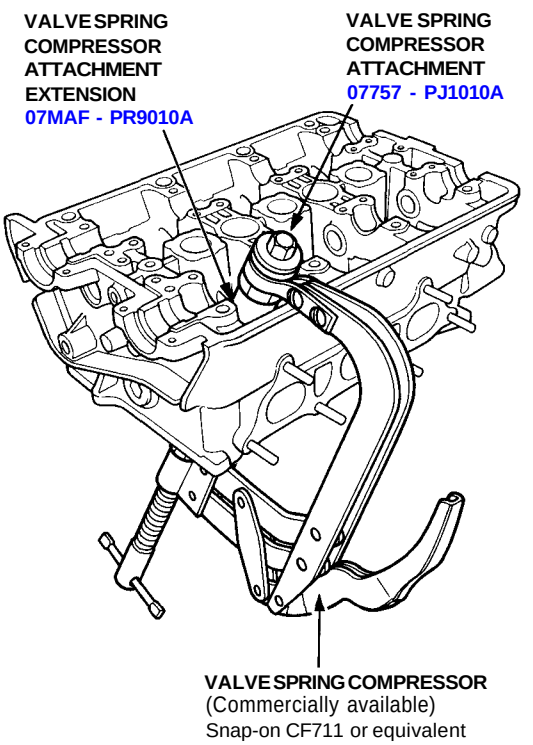

(cont'd)

Replacement (cont'd)

3. Install the valve guide seal remover as shown.

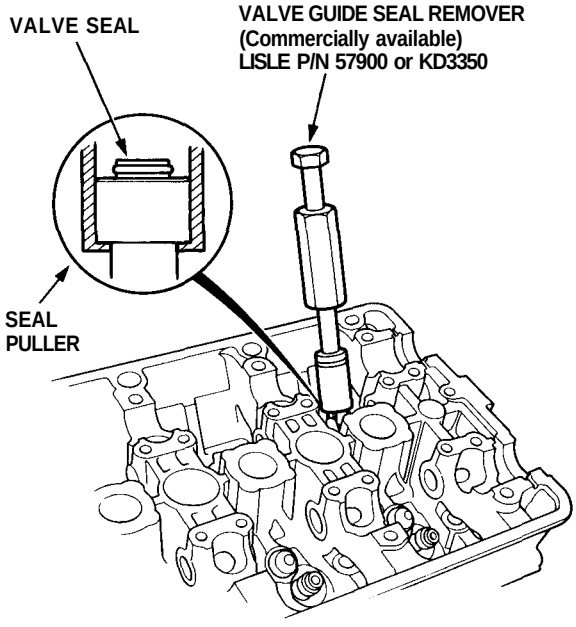

4. Remove the valve guide seal.

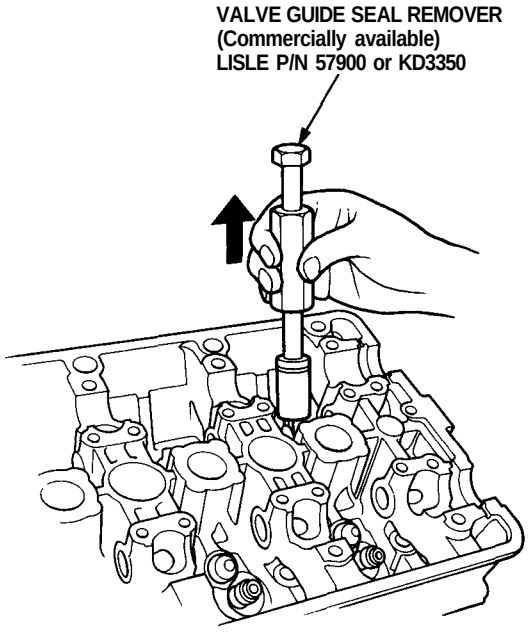

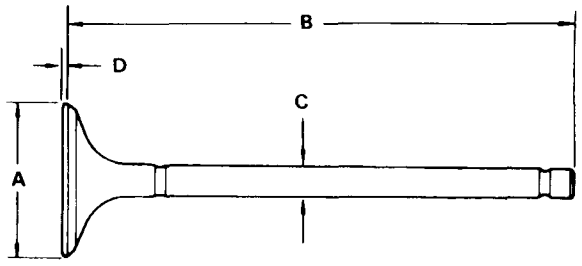

M/T:

Intake Valve Dimensions

A Standard (New): 35.9 - 36.1 mm (1.413 - 1.421 in)
B Standard (New): 111.10 - 111.40 mm (4.374 - 4.386 in)
C Standard (New): 5.475 - 5.485 mm (0.2156 - 0.2159 in)
C Service Limit: 5.445 mm (0.2144 in)
D Standard (New): 1.05 - 1.35 mm (0.041 - 0.053 in)
D Service Limit: 0.85 mm (0.033 in)

Exhaust Valve Dimensions

A Standard (New): 29.9 - 30.1 mm (1.177 - 1.185 in)
B Standard (New): 109.60 - 109.90 mm (4.315 - 4.327 in)
C Standard (New): 5.45 - 5.46 mm (0.2146 - 0.2150 in)
C Service Limit: 5.42 mm (0.2134 in)
D Standard (New): 1.65 - 1.95 mm (0.065 - 0.077 in)
D Service Limit: 1.45 mm (0.057 in)

A/T:

Intake Valve Dimensions

A Standard (New): 34.9 - 35.1 mm
(1.374 - 1.382 in)

B Standard (New): 111.10-111.40 mm
(4.374 - 4.386 in)

C Standard (New): 5.475-5.485 mm
(0.2156-0.2159 in)

C Service Limit: 5.445 mm (0.2144 in)

D Standard (New): 1.05—1.35 mm
(0.041-0.053 in)

D Service Limit: 0.85 mm (0.033 in)

Exhaust Valve Dimensions

A Standard (New): 29.9-30.1 mm
(1.177-1.185 in)

B Standard (New): **109.60-109.90 mm**
(4.315-4.327 in)

C Standard (New): **5.45-5.46 mm**
(0.2146-0.2150 in)

C Service Limit: 5.42 mm (0.2134 in)

D Standard (New): 1.65-1.95 mm
(0.065-0.077 in)

D Service Limit: 1.45 mm (0.057 in)

Warpage

NOTE: If camshaft-to-holder oil clearances (see pages 6-35, 6-36) are not within specification, the cylinder head cannot be resurfaced.

If camshaft-to-holder oil clearances are within specifications, check the cylinder head for warpage.

- If warpage is less than 0.05 mm (0.002 in) cylinder head resurfacing is not required.
- If warpage is between 0.05 mm (0.002 in) and 0.2 mm (0.008 in), resurface cylinder head.
- Maximum resurface limit is 0.2 mm (0.008 in) based on a height of 1 51 mm (5.945 in).

PRECISION STRAIGHT EDGE

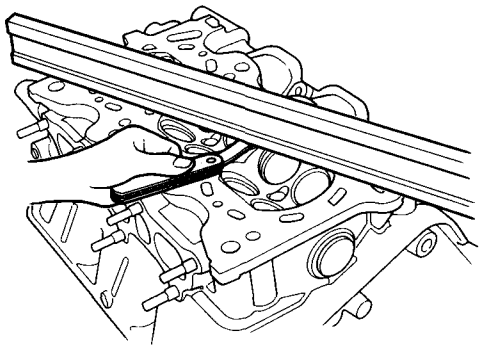

Measure along edges, and three ways across center.

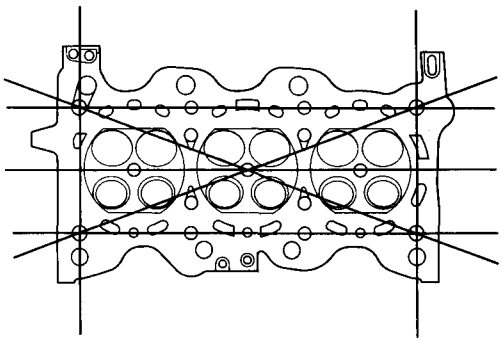

Cylinder Head Height:
Standard (New): 150.95 - 151.05 mm
(5.943 - 5.947 in)

Valve Seats

Reconditioning

1. Renew the valve seats in the cylinder head using a valve seat grinder.

   NOTE: If guides are worn (see page 6-41), replace them (see page 6-42) before grinding the valve seats.



2. Carefully grind a 45° seat, removing only enough material to ensure a smooth and concentric seat.

3. Bevel the upper edge of the seat with the 30° stone. Bevel the lower edge it two angles.
   First grind the edge with the 60° stone, then grind the bottom edge with the 67.5° stone.
   Check width of seat and adjust accordingly.

4. Make one more very light pass with the 45° stone to remove any possible burrs caused by the other stones.

   Valve Seat Width:
   Standard (New):
   Intake 0.80 - 1.00 mm (0.031 - 0.039 in)
   Exhaust 1.25 - 1.55 mm (0.049 - 0.061 in)
   Service Limit:
   Intake 1.5 mm (0.059 in)
   Exhaust 2.0 mm (0.079 in)

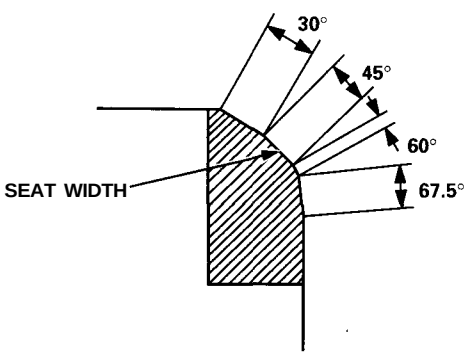

5. After resurfacing the seat, inspect for even valve seating: Apply Prussian Blue compound to the valve face, and insert valve in original location in the head, then lift it and snap it closed against the seat several times.

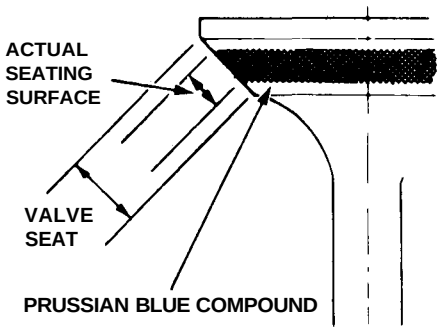

6. The actual valve seating surface, as shown by the blue compound, should be centered on the seat.
   - If it is too high (closer to the valve stem), you must make a second cut with the 60° stone to move it down, then one more cut with the 45° stone to restore seat width.
   - If it is too low (closer to the valve edge), you must make a second cut with the 30° stone to move it up, then one more cut with the 45° stone to restore seat width.
     NOTE: The final cut should always be made with the 45° stone.

7. Insert intake and exhaust valves in the head and measure valve stem installed height.
   Valve Stem Installed Height (Intake and Exhaust):
   Standard (New): 41.55-42.35 mm (1.6358-1.6673 in)
   Service Limit: 42.435 mm (1.6707 in)

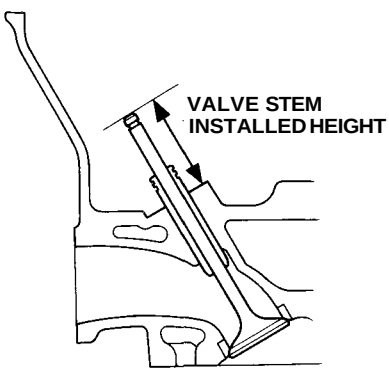

8. If valve stem installed height is over the service limit, replace the valve and recheck. If still over the service limit, replace the cylinder head; the valve seat in the head is too deep.

Valve Guides

Valve Movement

Measure the guide-to-stem clearance with a dial indicator while rocking the stem in the direction of normal thrust (wobble method).

Intake Valve Stem-to-Guide Clearance:
Standard (New): 0.05 — 0.11 mm
(0.002 — 0.004 in)
Service Limit: 0.16 mm (0.006 in)

Exhaust Valve Stem-to-Guide Clearance:
Standard (New): 0.10 — 0.16 mm
(0.004 — 0.006 in)
Service Limit: 0.22 mm (0.009 in)

Valve extended 10 mm out from seat.

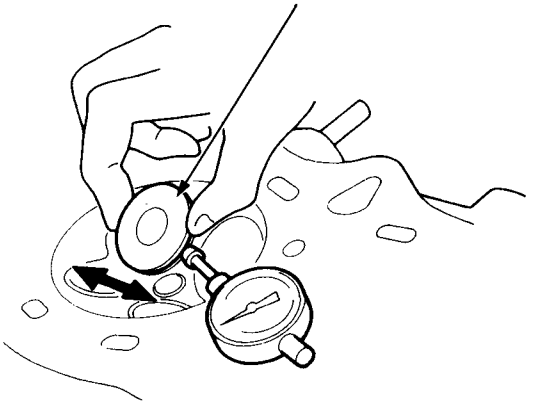

- If measurement exceeds the service limit, recheck using a new valve.
- If measurement is now within the service limit, reassemble using a new valve.
- If measurement still exceeds limit, recheck using alternate method below, then replace valve and guide, if necessary.

NOTE: An alternate method of checking guide to stem clearance is to subtract the O.D. of the valve stem, measured with a micrometer, from the I.D. of the valve guide, measured with an inside micrometer or ball gauge.
Take the measurements in three places along the valve stem and three places inside the valve guide. The difference between the largest guide measurement and the smallest stem measurement should not exceed the service limit.

Intake Valve Stem-to-Guide Clearance:
Standard (New): 0.025 — 0.055 mm
(0.001 — 0.002 in)
Service Limit: 0.08 mm (0.003 in)

Exhaust Valve Stem-to-Guide Clearance:
Standard (New): 0.05 — 0.08 mm
(0.002 — 0.003 in)
Service Limit: 0.11 mm (0.004 in)

Valve Guides

Replacement

1. As illustrated below, use a commercially available air-impact valve guide driver attachment modified to fit the diameter of the valve guides. In most cases, the same procedure can be done using the special tool and a conventional hammer.

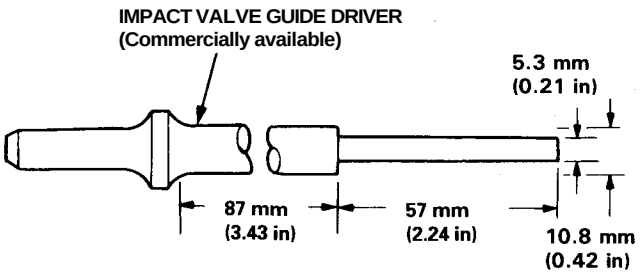

or
VALVE GUIDE DRIVER, 5.5 mm
07742-0010100

2. Select the proper replacement guides, and chill them in the freezer section of a refrigerator for about an hour.

3. Use a hot plate or oven to evenly heat the cylinder head to 300°F (150°C). Monitor the temperature with a cooking thermometer.

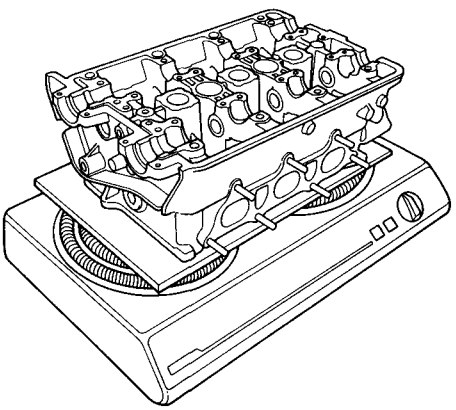

CAUTION:
- **Do not use a torch; it may warp the head.**
- **Do not get the head hotter than 300°F (150°C); excessive heat may loosen the valve seats.**
- **To avoid burns, use heavy gloves when handling the heated cylinder head.**

4. Working from the camshaft side, use the driver and an air hammer to drive the guide about 2 mm (0.1 in) towards the combustion chamber. This will knock off some of the carbon and make removal easier.

CAUTION:
- **Always wear safety goggles or a face shield when driving valve guides.**
- **Hold the air hammer directly in line with the valve guide to prevent damaging the driver.**

5. Turn the head over, and drive the guide out toward the camshaft side of head.



VALVE GUIDE DRIVER, 5.5 mm
07742-0010100

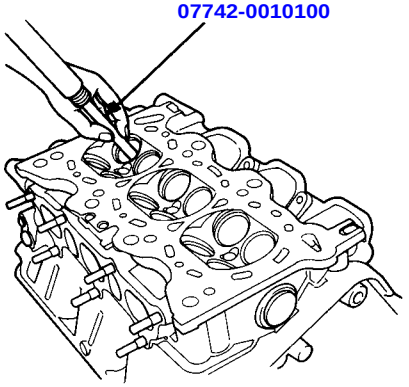

If a valve guide still won't move, drill it out with a 8 mm (5/16 inch) bit, then try again.

CAUTION: Drill guides only in extreme cases; you could damage the cylinder head if the guide breaks.

6. Remove the new guides from the freezer, one at a time, as you need them.

7. Apply a thin coat of clean engine oil to the outside of the new valve guide. Install the guide from the camshaft side of the head; use the special tool to drive the guide in to the specified installed height. If you have all 12 guides to do, you may have to reheat the head.

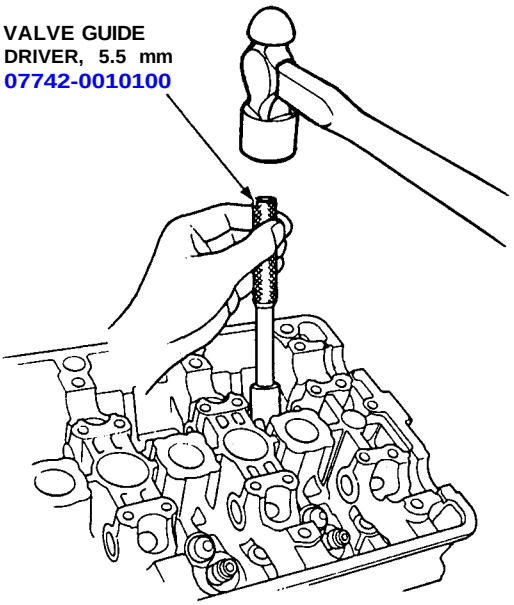

Valve Guide Installed Height:
Intake: 13.75-14.25 mm (0.541-0.561 in)
Exhaust: 13.75-14.25 mm (0.541-0.561 in)

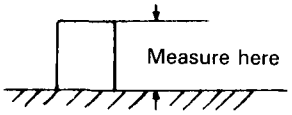

Reaming

NOTE: For new valve guides only.

1. Coat both reamer and valve guide with cutting oil.
2. Rotate the reamer clockwise the full length of the valve guide bore.
3. Continue to rotate the reamer clockwise while removing it from the bore.
4. Thoroughly wash the guide in detergent and water to remove any cutting residue.
5. Check clearance with a valve (see page 6-41).
   — Verify that the valve slides in the intake and exhaust valve guides without exerting pressure.

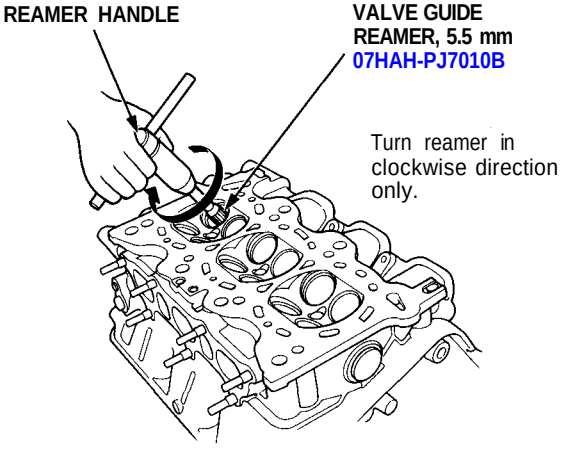

Valves, Valve Springs and Valve Seals

Installation Sequence

NOTE: Exhaust and intake valve seals are NOT interchangeable.

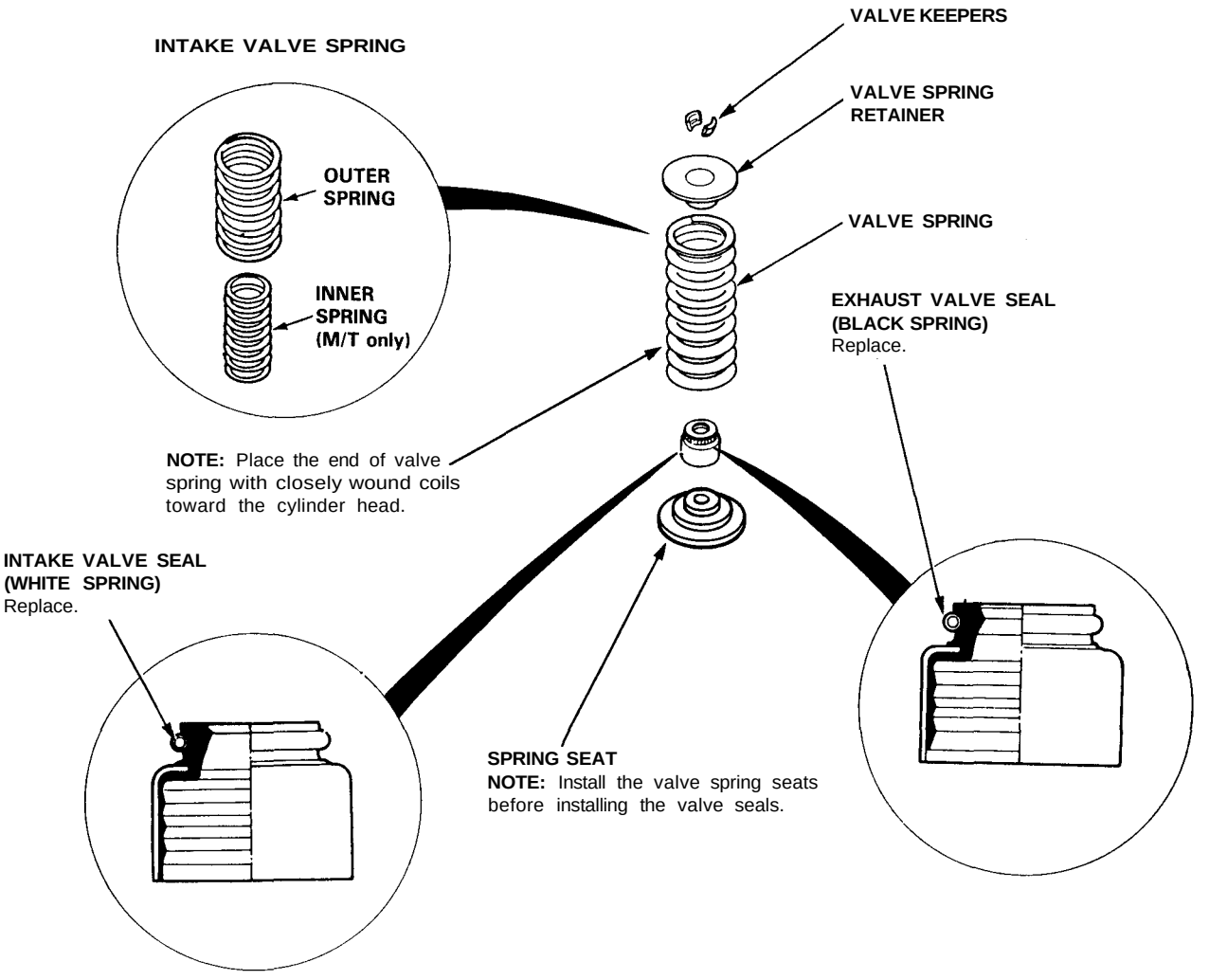

VALVE SEAL INSTALLER
(Commercially available)
KD-2899
NOTE: Use small ID end of tool.

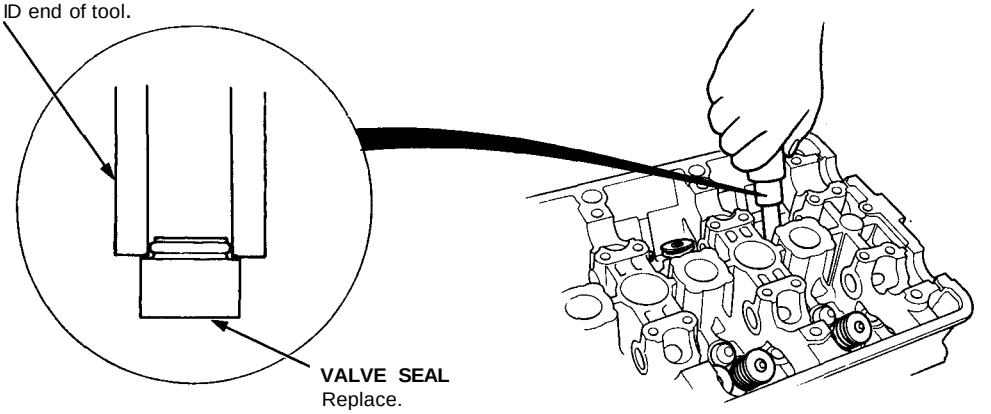

Valve Installation

NOTE: Tap the valve stem only along its axis so you do not bend the stem.

- When installing valves in the cylinder head, coat valve stems with oil before inserting into valve guides, and make sure all valves move up and down smoothly.
- When valves and springs are in place, lightly tap the end of each valve stem two or three times to ensure proper seating of valve and valve keepers (use hammer handle bottom).

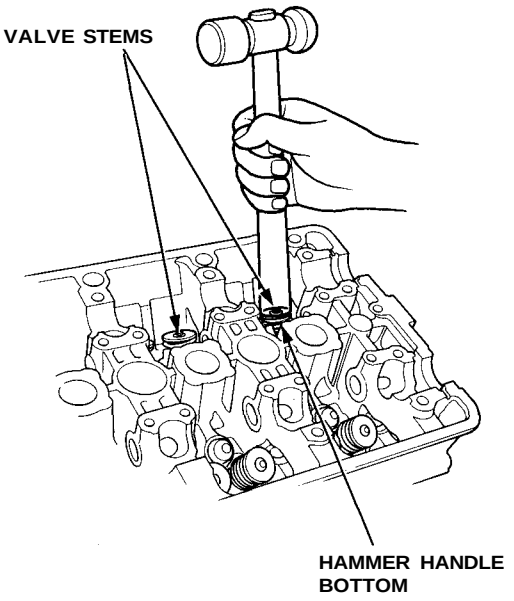

Installation

Install the cylinder heads in the reverse order of removal:

- Always use new head gaskets.
- Cylinder heads and engine block surface must be clean.
- Turn the crankshaft so that No. 1 piston is at TDC (see page 6-19).
- Do not use the middle cover and lower cover to store removed items.
- Clean the middle cover and lower cover before installation.

1. Install the front and rear exhaust manifolds to each cylinder head, then tighten the self-locking nuts in a crisscross pattern in two or three steps, beginning with the inner nut (A/T).
   - Apply oil to the self-locking nut threads.
   - Always use new exhaust manifold gaskets.

2. Install the exhaust manifold covers (A/T).

Front:

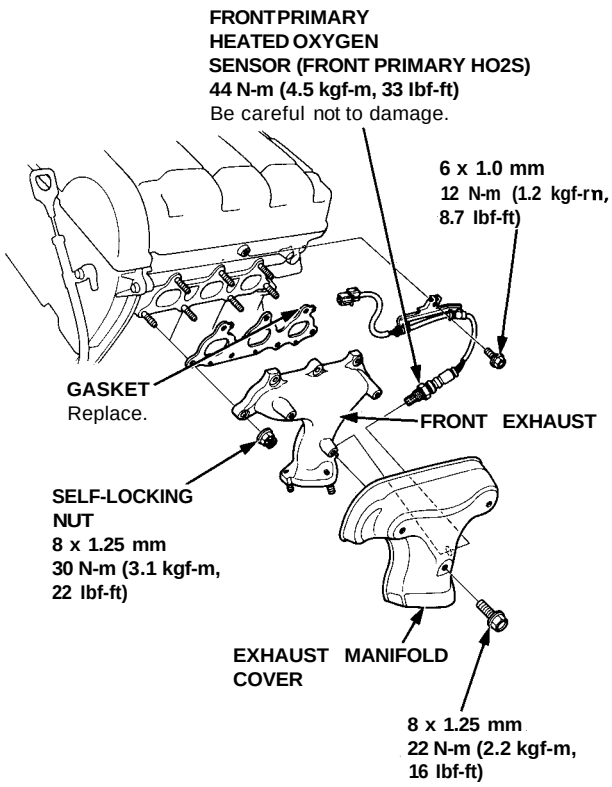

(cont'd)

Installation (cont'd)

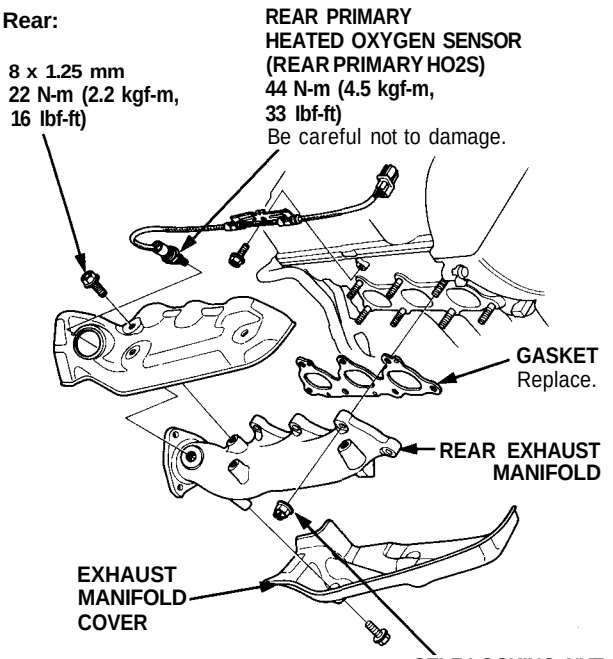

3. Install the cylinder heads on the engine block. The cylinder head dowel pins and the head oil control orifice must be aligned.
   - Always use a new cylinder head gasket.
   - Clean the oil control orifice before installing.

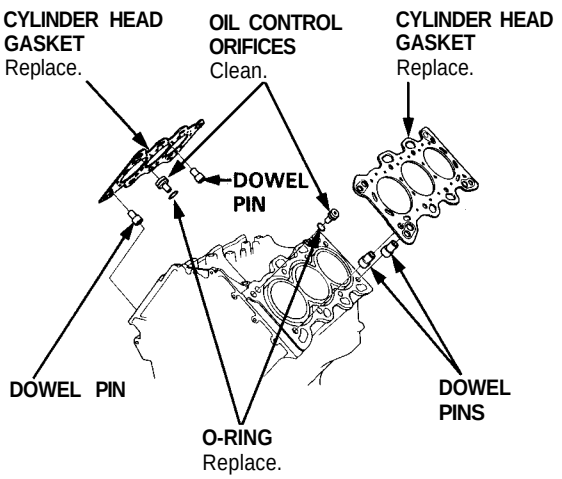

4. Tighten the cylinder head bolts sequentially in two or three steps.
   - Apply clean engine oil to the bolt threads and washer contact surfaces.

Specified Torque
M/T: 11 x 1.5 mm
96 N-m (9.8 kgf-m, 71 lbf ft)
A/T: 11 x 1.5 mm
76 N-m (7.8 kgf-m, 56 lbf ft)

NOTE: We recommend using a beam-type torque wrench. When using a preset-type torque wrench, be sure to tighten slowly and not to over-tighten.

CYLINDER HEAD BOLTS TORQUE SEQUENCE

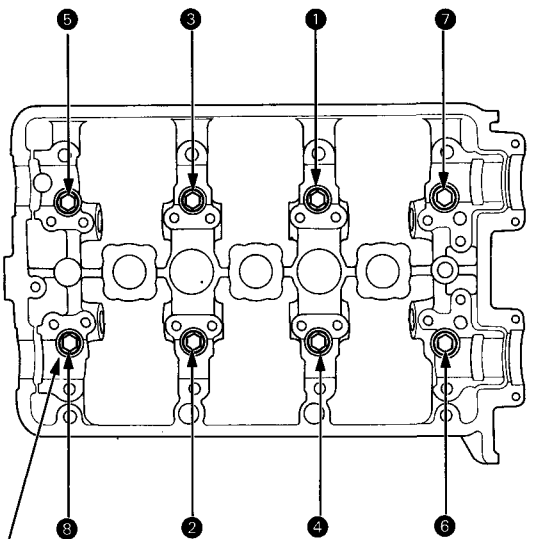

CYLINDER HEAD BOLT
M/T: 11 x 1.5 mm
96 N-m (9.8 kgf-m, 71 lbf-ft)
A/T: 11 x 1.5 mm
76 N-m (7.8 kgf-m, 56 lbf-ft)
Apply clean engine oil to the bolt threads and washer contact surfaces.

Rocker Arms

Installation

Install the rocker arms in the reverse order of removal:

- Valve adjusting locknuts should be loosened and adjusting screws backed off before installation.
- The component parts must be installed in the original locations.

1. Install the lost motion assemblies.

2. Install the rocker arms while passing the rocker arm shaft through the cylinder head.

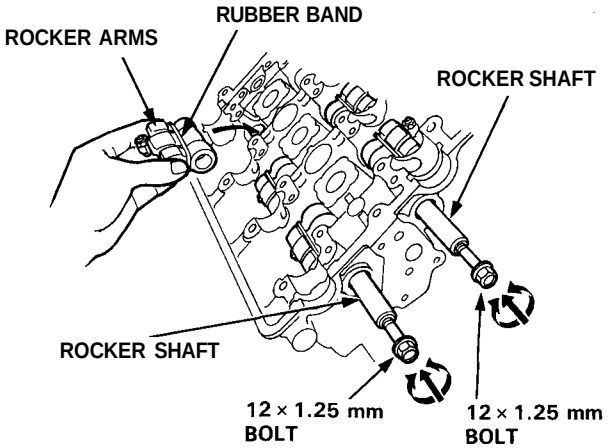

3. Install the orifices. If the holes in the rocker arm shafts and the cylinder head are not in line with each other, use a 12 x 1.25 mm bolt in the rocker arm shaft to rotate the shaft.

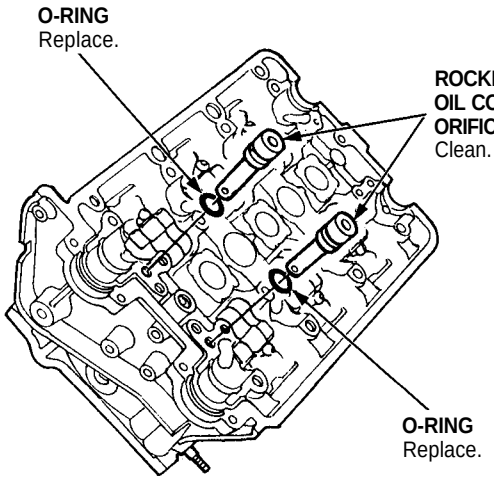

CAUTION:

- **After installing the rocker shaft orifice, try to turn the rocker shaft to make sure that the orifice has been inserted in the hole of the rocker shaft correctly. If the orifice is in place, it should not turn.**
- **Remove the rubber bands after installing the rocker arms.**

Camshafts

Installation

CAUTION: Valve locknuts should be loosened and adjusting screws backed off before installation.

1. After wiping down the camshaft and journals in the cylinder head, lubricate both surfaces and install the camshafts and rubber caps.

   NOTE: Apply liquid gasket around the rubber cap.

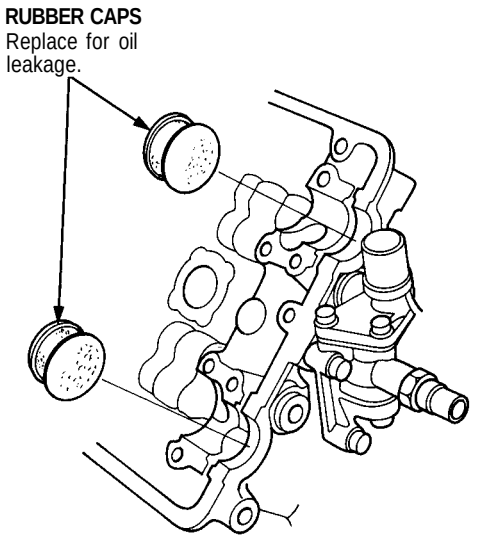

2. Turn the camshaft until its keyway is facing up. (No. 1 cylinder TDC).

3. Set a new O-ring and a dowel pin in the oil passage of the No. 1 camshaft holder.

4. Install the camshaft seals with the open side (spring) facing in.

OIL Lubricate cam lobes after reassembly.

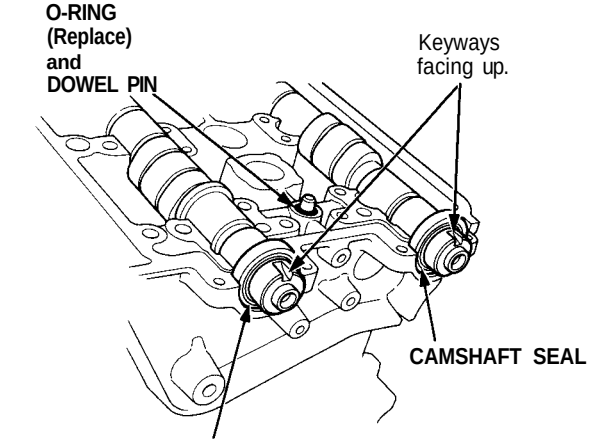

Seal housing surface should be dry. Apply a light coat of oil to camshaft and inner lip of seal.

(cont'd)

Camshafts

Installation (cont'd)

5. Apply liquid gasket to the head mating surfaces of the No. 1 and the No. 4 camshaft holders.
   5. Apply liquid gasket to the shaded areas.

6. Install the camshaft holders.

   NOTE:
   - "F" or "R" marks are stamped on the camshaft holders.
   - The arrows must be pointing to the timing belt side.
   - Set two dowel pins in each camshaft holder.

FRONT:

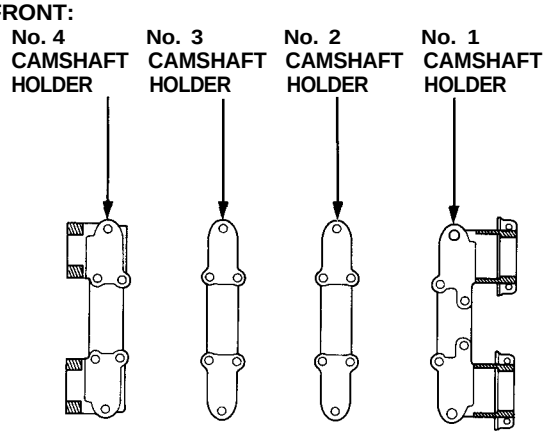

REAR:

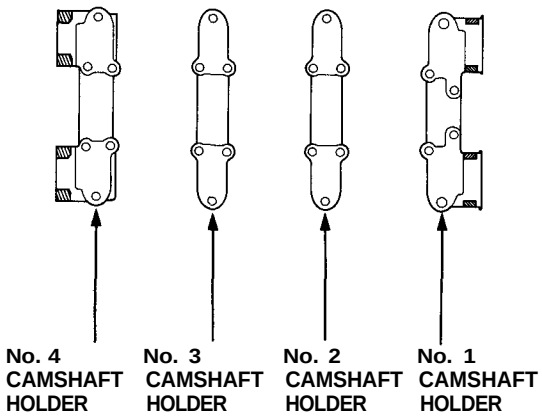

7. Install the camshaft holder plates.

8. Tighten each bolt two turns at a time in the sequence shown below to insure that the rockers do not bind on the valves.

   NOTE: Apply clean engine oil to 8 mm bolt threads.

   Specified torque:
   ① – ㉔ 8 mm x 1.25 mm bolts:
   22 N-m (2.2 kgf-m, 16 lbf-ft)
   ㉕ – ㉘ 6 mm x 1.0 mm bolts:
   9.8 N-m (1.0 kgf-m, 7.2 lbf-ft)

CAMSHAFT HOLDER BOLT TORQUE SEQUENCE

FRONT:

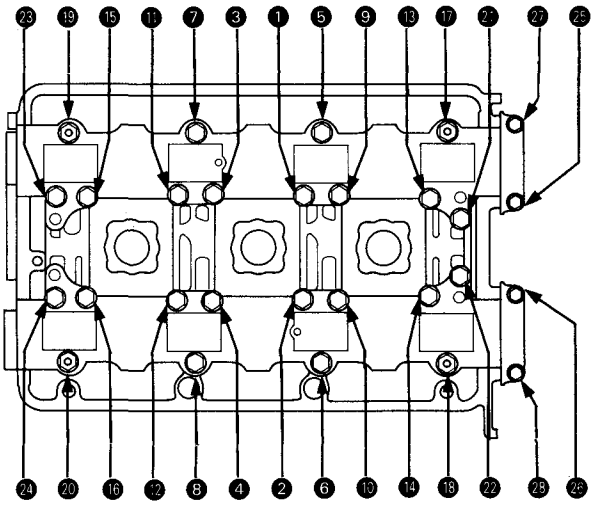

REAR:

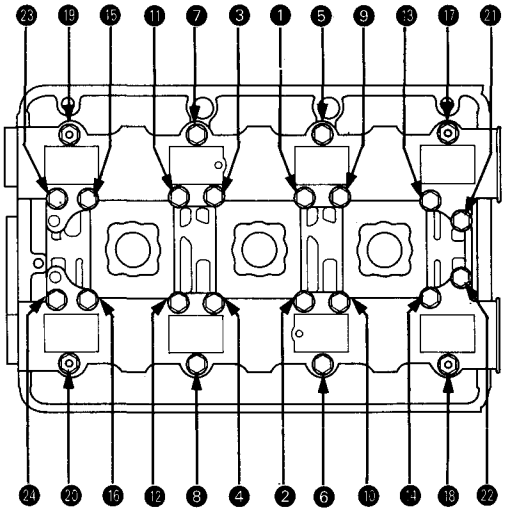

9. Install the CKP/CYP sensor on the front cylinder head.

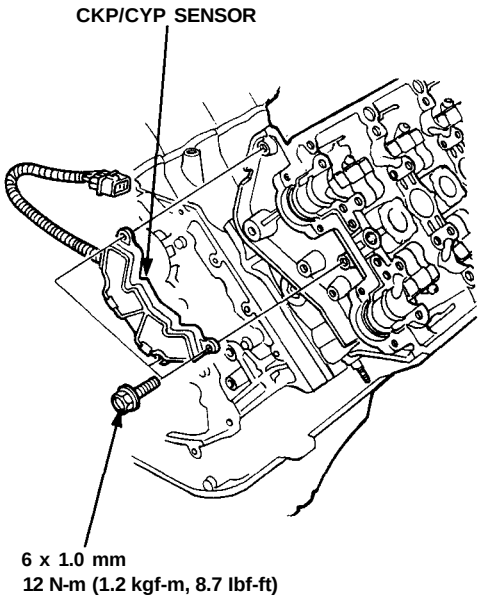

10. Install the front and rear back covers.

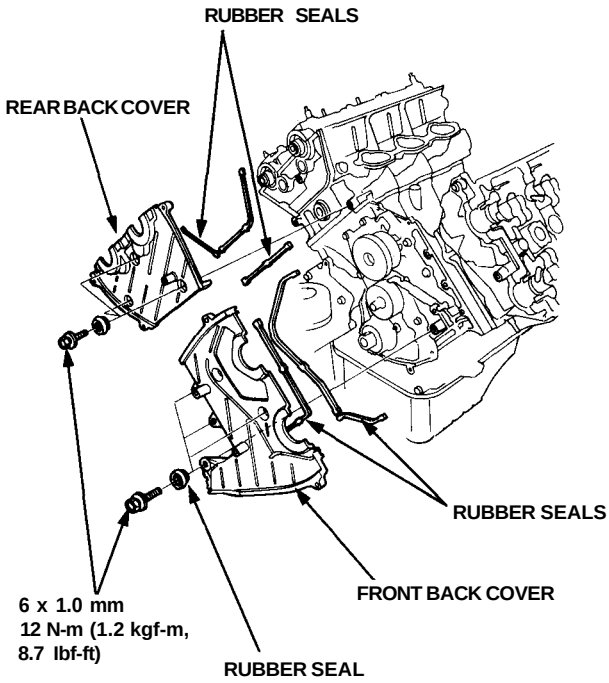

11. Insert the dowel pins in the camshaft pulley.

12. Install the camshaft pulleys, then tighten the retaining bolts to the torque specified.

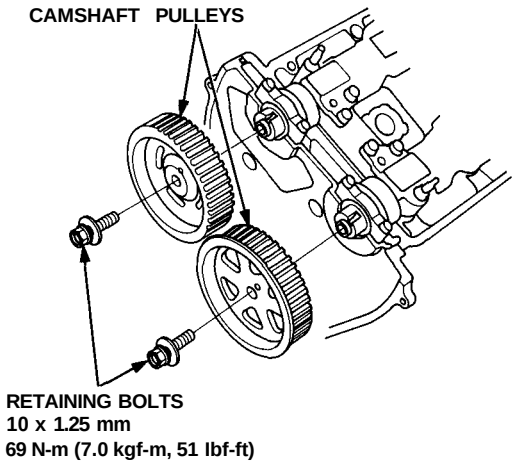

13. Install the timing belt (see page 6-18).

14. Adjust the valve clearance (see page 6-9).

15. Inspect the rocker arms (see pages 6-7, 6-8).

16. Install the head cover gasket in the groove of the cylinder head cover. Seat the recesses for the camshaft first, then work it into the groove around the outside edges.

NOTE:
- Before installing the head cover gasket, thoroughly clean the seal and the groove.
- When installing, make sure the head cover gasket is seated securely in the corners of the recesses with no gap.

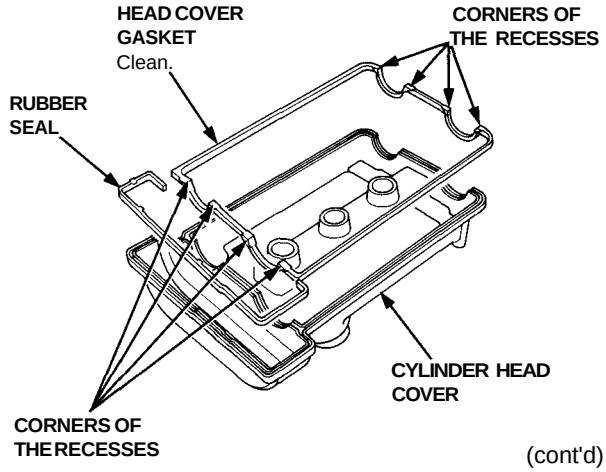

(cont'd)

Installation (cont'd)

17. Apply liquid gasket to the head cover gasket at the eight corners of the recesses.

    NOTE:
    - Use liquid gasket, Part No. 08718 - 0001 or 08718 - 0003.
    - Check that the mating surfaces are clean and dry before applying liquid gasket.
    - Do not install the parts if five minutes or more have elapsed since applying liquid gasket. Instead, reapply liquid gasket after removing old residue.
    - After assembly, wait at least 20 minutes before filling the engine with oil.

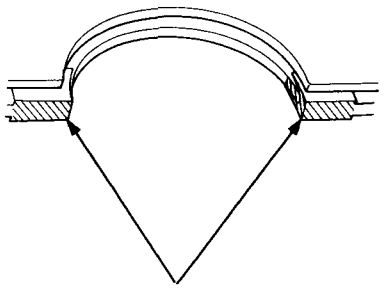

Apply liquid gasket to the shaded areas.

18. When installing the cylinder head cover, hold the head cover gasket in the groove by placing your fingers on the camshaft contacting surfaces (top of the semicircles).
    Once the cylinder head cover is on the camshaft holder, slide the cover slightly back and forth to seat the head cover gasket.

    NOTE:
    - Before installing the cylinder head cover, clean the cylinder head contacting surfaces with a shop towel.
    - Do not touch the parts where liquid gasket was applied.
    - Replace the washer when damaged or deteriorated.

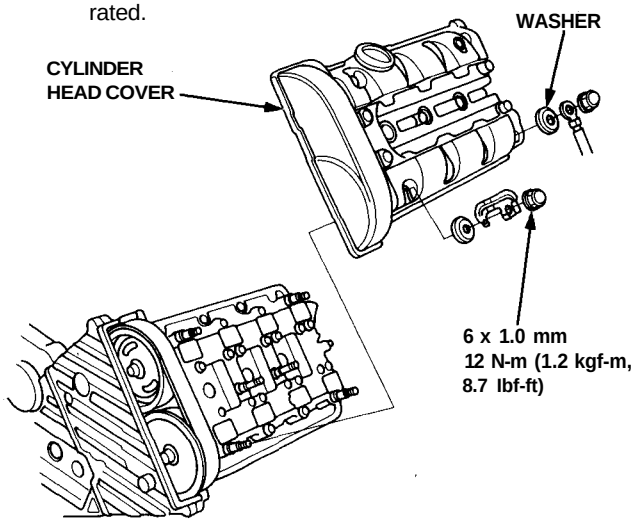

19. Tighten the nuts in two or three steps. In the final step, tighten all nuts, in sequence, to 12 N-m (1.2 kgf-m, 8.7 lbf-ft).

    NOTE: After assembly, wait at least 20 minutes before filling the engine with oil.

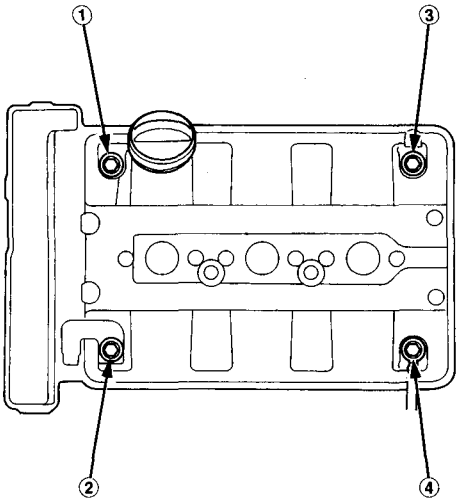

20. After installation, check that all tubes, hoses and connectors are installed correctly.

    NOTE: After installation, fill the engine with oil up to the specified level, run the engine for more than three minutes, then check for oil leakage.

Engine Block

Special Tools 7–2
Component Location Index 7–3
Flywheel and Drive Plate
  Replacement 7–6
Connecting Rods and Crankshaft
  End Play 7–6
Main Bearings
  Clearance 7–7
  Selection 7–8
Connecting Rod Bearings
  Clearance 7–7
  Selection 7–8
Piston/Connecting Rod Assemblies and Crankshaft
  Removal 7–9
Crankshaft
  Inspection 7–11
  Installation 7–19
Cylinder Block
  Inspection 7–12
  Bore Honing (A/T) 7–13
Piston/Connecting Rod Assemblies
  Inspection 7–13
  Installation 7–17
Connecting Rods
  Selection 7–14
Piston Rings
  End Gap 7–15
  Replacement 7–15
  Ring–to–Groove Clearance 7–16
  Alignment 7–16
Oil Seal
  Installation 7–18

Special Tools

Ref. No.	Tool Number	Description	Qty	Page Reference
①	07LAB – PV00100 or 07924 – PD20003	Ring Gear Holder	1	7-6
②	07749 – 0010000	Driver	1	7-18
③	07948 – SB00101	Driver Attachment	1	7-18

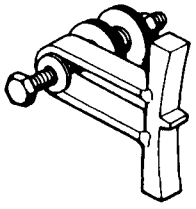

①

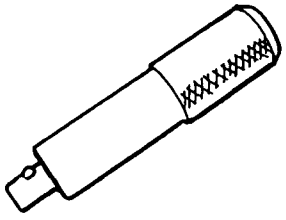

②

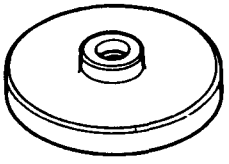

③

Engine Block

Illustrated Index

Lubricate all internal parts with engine oil during reassembly.

NOTE:

- Apply liquid gasket to the mating surfaces of the left side cover and oil pump case before installing them.
- Use liquid gasket, part No. 08718-0001 or 08718-0003.
- If the bottom of the oil pan is deformed, it should be repaired or the oil pan should be replaced retain proper clearance between the screen and the bottom.

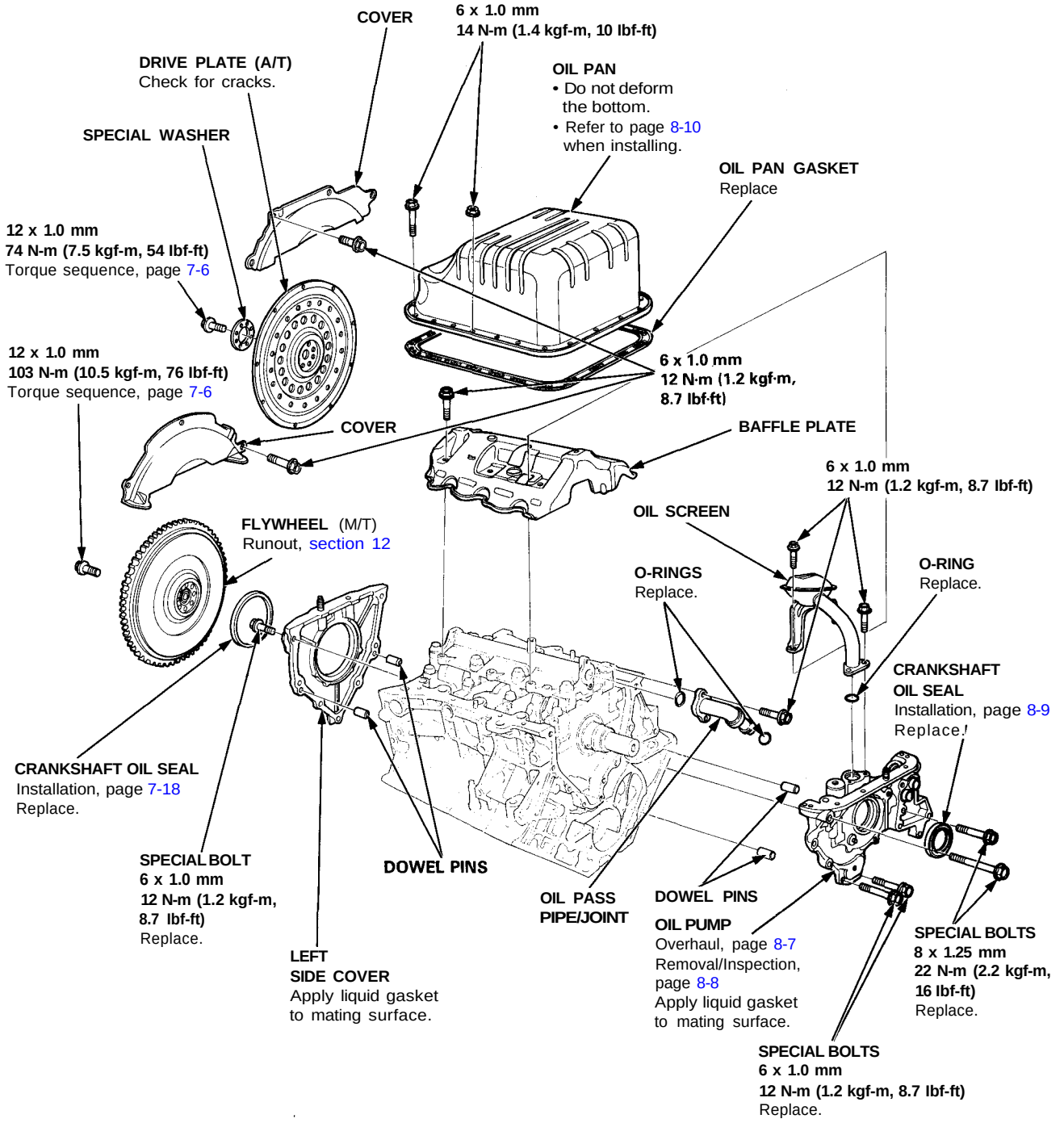

(cont'd)

Engine Block

Illustrated Index (cont'd)

Lubricate all internal parts with engine oil during reassembly.

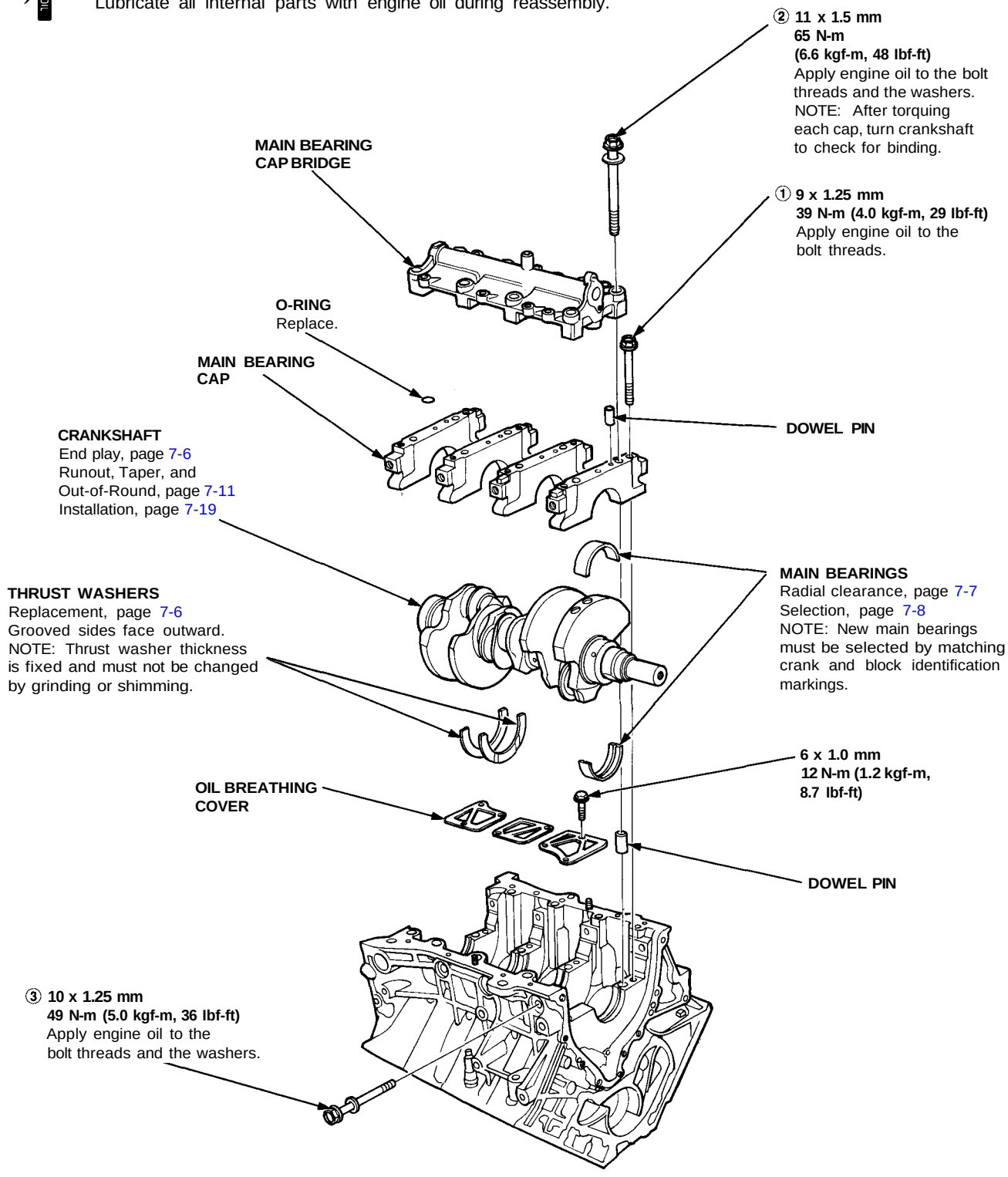

NOTE: New rod bearings must be selected by matching connecting rod assembly and crankshaft identification markings (see page 7-8).

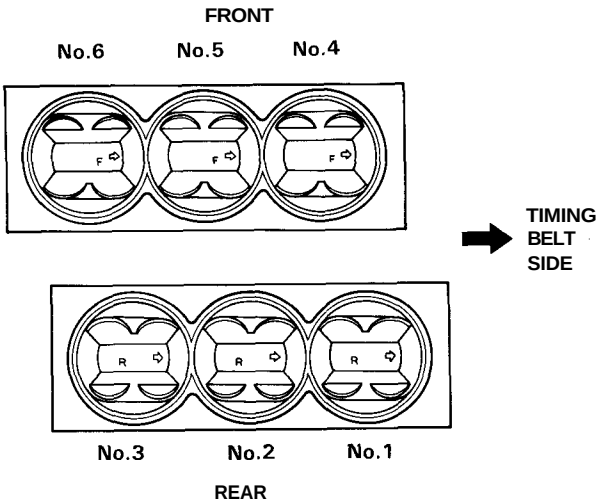

CAUTION:

- **The piston skirt is coated with molybdenum; handle the piston carefully to prevent any damage.**
- **The connecting rods are made of titanium. Attempting to remove the piston pin with conventional shop equipment will damage the connecting rod.**
- **If the piston, connecting rod, or piston pin require replacement, all three must be replaced as an assembly.**

PISTON
Inspection, page 7-12
NOTE:
- Before removing piston, inspect the top of the cylinder bore for carbon build-up or ridge. Remove ridge if necessary, page 7-9.
- To maintain proper piston clearance, match the letter on the piston top (No letter denotes A.) with the letter for each cylinder stamped on the block.

CONNECTING ROD ASSEMBLY
End play, page 7-6
Selection, page 7-14

CONNECTING ROD BEARINGS
Clearance, page 7-7
Selection, page 7-8

PISTON RINGS
Replacement, page 7-15
Measurement, pages 7-15 and 7-16
Alignment, page 7-16

CONNECTING ROD BOLT

CONNECTING ROD WASHER

Inspect top of each cylinder bore for carbon build-up or ridge before removing piston. Remove ridge if necessary, page 7-9

ENGINE BLOCK
Cylinder bore inspection, page 7-12
Warpage inspection, page 7-12
Cylinder bore honing, page 7-13

CYLINDER BORE SIZES
NOTE: To maintain proper piston clearance, match these letters with the letters on the pistons. The letters on the block read from left to right, No. 1 through No. 3. cylinders on the first line and No. 4 through No. 6 cylinders on the second line.

CONNECTING ROD CAP NUT
8 x 0.75 mm
20 N-m (2.0 kgf-m, 14 lbf-ft)
then turn 116°
Apply engine oil to the nut threads.
After torquing each bearing cap, rotate crankshaft to check for binding.

CONNECTING ROD BEARING CAP
Installation, page 7-19
NOTE: Install caps so the bearing recess is on the same side as the recess in the rod.

Flywheel and Drive Plate

Replacement

Manual Transmission:
Remove the eight flywheel bolts, then separate the flywheel from the crankshaft flange. After installation, tighten the bolts in the sequence shown.

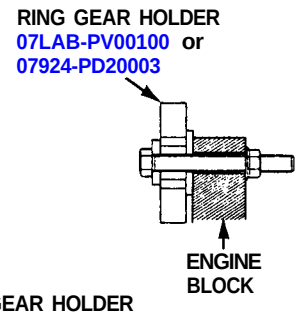

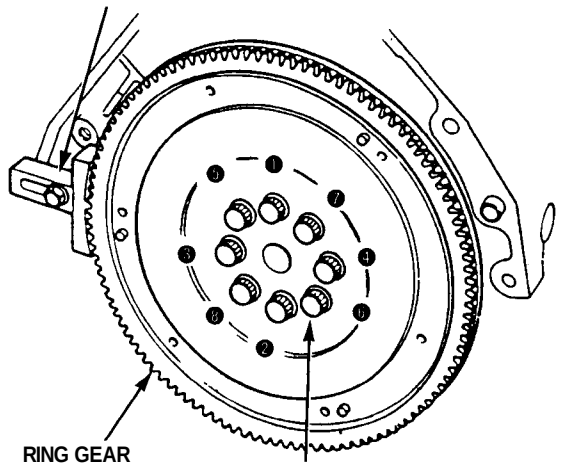

Automatic Transmission:
Remove the eight drive plate bolts, then separate the drive plate from the crankshaft flange. After installation, tighten the bolts in the sequence shown.

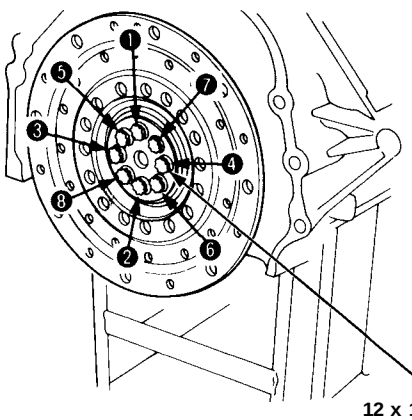

Connecting Rods and Crankshaft

End Play

Connecting Rod End Play:
Standard (New): 0.15-0.30 mm (0.006-0.012 in)
Service Limit: 0.40 mm (0.016 in)

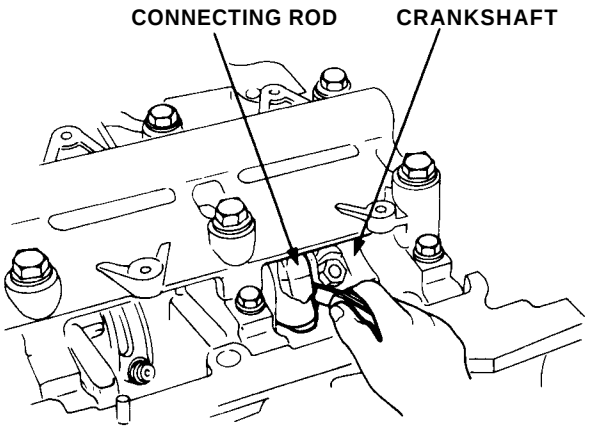

- If out-of-tolerance, install a new connecting rod.
- If still out-of-tolerance, replace the crankshaft (see pages 7-9, 7-10 and 7-19 to 7-22).

Push the crankshaft firmly away from the dial indicator, and zero the dial against the end of the crankshaft. Then pull the crankshaft firmly back toward the indicator; dial reading should not exceed service limit.

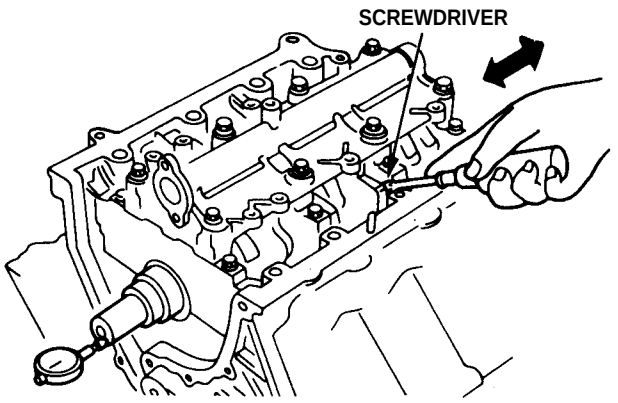

Crankshaft End Play:
Standard (New): 0.10—0.35 mm (0.004-0.014 in)
Service Limit: 0.45 mm (0.018 in)

- If end play is excessive, inspect the thrust washers and thrust surface on the crankshaft. Replace parts as necessary.

NOTE: Thrust washer thickness is fixed and must not be changed either by grinding or shimming. Thrust washers are installed with grooved side facing outward.

Main Bearings

Clearance

1. To check main bearing-to-journal oil clearance, remove the main caps and bearing halves.
2. Clean each main journal and bearing half with a clean shop towel.
3. Place one strip of plastigage across each main journal.
   NOTE: If the engine is still in the car when you bolt the main cap down to check clearance, the weight of the crankshaft and flywheel will flatten the plastigage further than just the torque on the cap bolts, and give you an incorrect reading. For an accurate reading, support the crank with a jack under the counterweights, and check only one bearing at a time.
4. Reinstall the bearings, caps and cap bridge, then torque the 9 mm bridge bolts to 39 N-m (4.0 kgf-m, 29 lbf-ft). Torque the 11 mm cap bolts to 65 N-m (6.6 kgf-m, 48 lbf-ft).
5. Torque the side bolts to 49 N-m (5.0 kgf-m, 36 lbf-ft).
6. Remove the bridge, caps and bearings, and measure the widest part of the plastigage.

Main Bearing-to-journal Oil Clearance:
Standard (New): 0.024—0.048 mm (0.0009-0.0019 in)
Service Limit: 0.050 mm (0.0020 in)

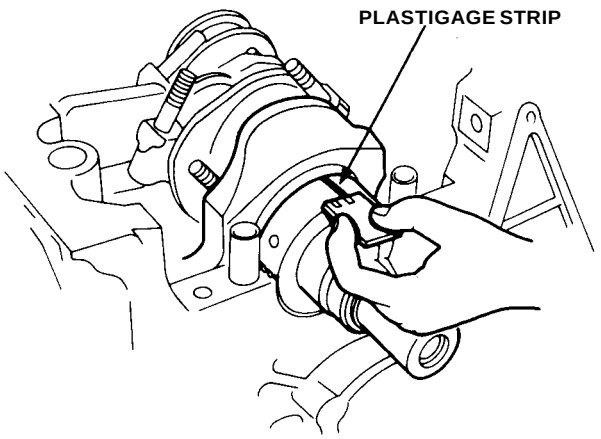

7. If the plastigage measures too wide or too narrow, (remove the engine if it's still in the car), remove the crankshaft, and remove the upper half of the bearing. Install a new, complete bearing with the same color code (select the color as shown on next page), and recheck the clearance.
   CAUTION: Do not file, shim, or scrape the bearings or the caps to adjust clearance.
8. If the plastigage shows the clearance is still incorrect, try the next larger or smaller bearing (the color listed above or below that one), and check again.
   NOTE: If the proper clearance cannot be obtained by using the appropriate larger or smaller bearings, replace the crankshaft and start over.

Connecting Rod Bearings

Clearance

1. Remove the connecting rod cap and bearing half.
2. Clean the crankshaft rod journal and bearing half with a clean shop towel.
3. Place plastigage across the rod journal.
4. Reinstall the bearing half and cap, and torque the nuts as shown on page 7-20.

   NOTE: Do not rotate the crankshaft during inspection.
5. Remove the rod cap and bearing half and measure the widest part of the plastigage. Make sure the clearance between the connecting rod and the bearing is within the standard shown below.

Connecting Rod Bearing-to-Journal Oil Clearance:
Standard (New): 0.040 - 0.064 mm (0.0016-0.0025 in)
Service Limit: 0.064 mm (0.0025 in)

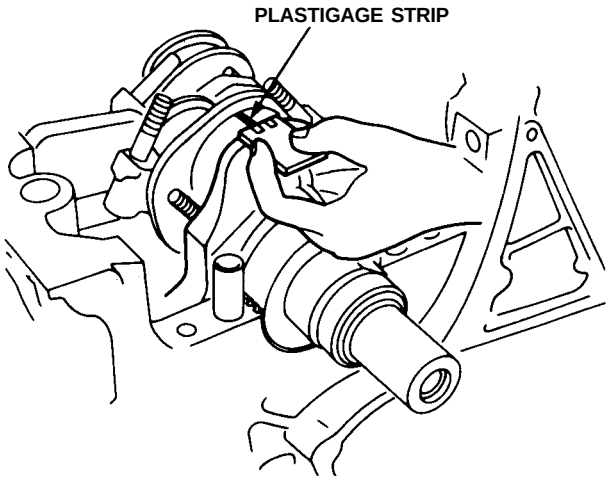

6. If the plastigage measures too wide or too narrow, remove the upper half of the bearing, install a new, complete bearing with the same color code (select color as shown on next page), and recheck the clearance.

   CAUTION: Do not file, shim, or scrape the bearing or the caps to adjust clearance.
7. If the plastigage shows the clearance is still incorrect, try the next larger or smaller bearing (the color listed above or below that one), and check clearance again.

   NOTE: If the proper clearance cannot be obtained by using the appropriate larger or smaller bearings, replace the crankshaft and start over.

Main Bearings

Selection

CAUTION: If the codes are indecipherable because of an accumulation of dirt and dust, do not scrub them with a wire brush or scraper. Clean them only with solvent or detergent.

Crankshaft Bore Code Locations

Letters or bars have been stamped on the end of the block as a code for the size of each of the four main journal bores. Use them, and the numbers stamped on the crankshaft (codes for main journal size), to choose the correct bearings.

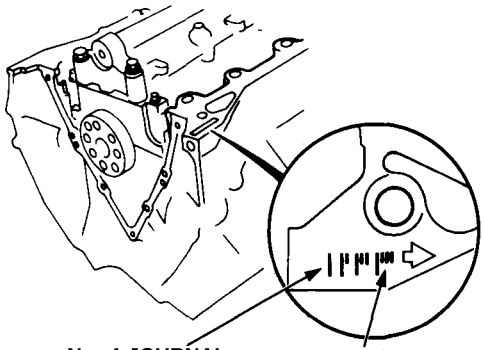

Main Journal Code Locations (numbers or bars)

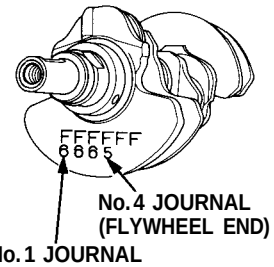

Bearing Design

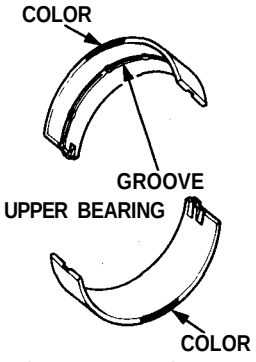

Bearing Identification

Color code is on the edge of the bearing

Larger crank bore →

A or I	B or II	C or III	D or IIII

→ Small bearing (thicker)

Smaller main journal	Smaller bearing (thicker)			
1 or I	Pink Pink	Pink Yellow	Yellow Yellow	Yellow Green
2 or II	Pink Yellow	Yellow Yellow	Yellow Green	Green Green
3 or III	Yellow Yellow	Yellow Green	Green Green	Green Brown
4 or IIII	Yellow Green	Green Green	Green Brown	Brown Brown
5 or IIII	Green Green	Green Brown	Brown Brown	Brown Black
6 or IIIII	Green Brown	Brown Brown	Brown Black	Black Black

NOTE: When using bearing halves of different colors, it does not matter which color is used in the top or bottom.

Connecting Rod Bearings

Selection

CAUTION: If the codes are indecipherable because of an accumulation of dirt and dust, do not scrub them with a wire brush or scraper. Clean them only with solvent or detergent.

Connecting Rod Journal Code Location

Numbers have been stamped on the side of each connecting rod as a code for the size of the big end. Use them, and the letters stamped on the crankshaft (codes for rod journal size), to choose the correct bearings.

Half of number is stamped on bearing cap and the other half is stamped on rod.

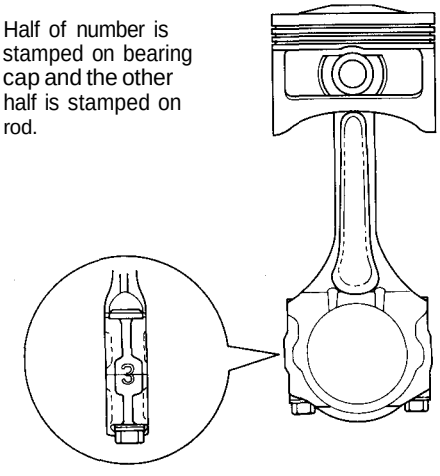

Rod Journal Code Locations (letters or bars)

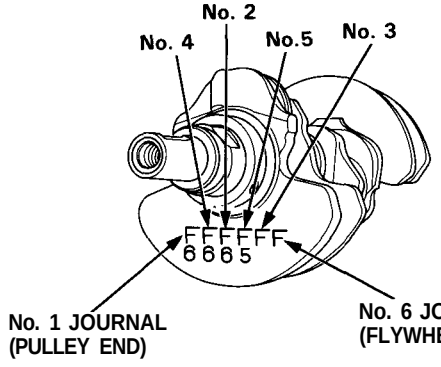

Bearing Identification

Color code is on the edge of the bearing

Larger big end bore →

1	2	3	4

→ Small bearing (thicker)

Smaller rod journal	Smaller bearing (thicker)			
A or I	Pink Pink	Pink Yellow	Yellow Yellow	Yellow Green
B or II	Pink Yellow	Yellow Yellow	Yellow Green	Green Green
C or III	Yellow Yellow	Yellow Green	Green Green	Green Brown
D or IIII	Yellow Green	Green Green	Green Brown	Brown Brown
E or IIIII	Green Green	Green Brown	Brown Brown	Brown Black
F or IIIIII	Green Brown	Brown Brown	Brown Black	Black Black

NOTE: When using bearing halves of different colors, it does not matter which color is used in the top or bottom.

Piston/Connecting Rod Assemblies and Crankshaft

Removal

1. Remove the left side cover.

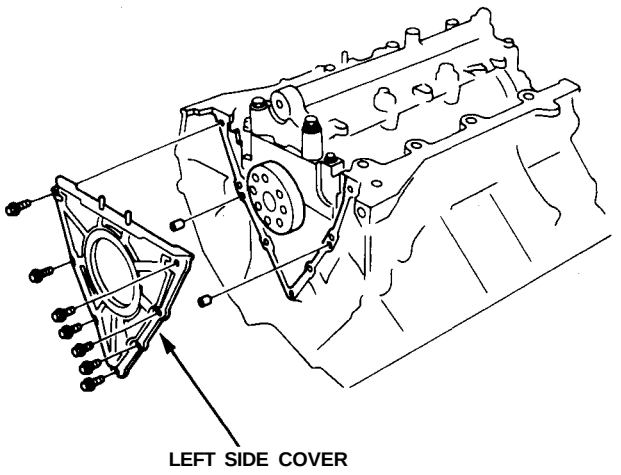

2. Remove the oil screen.

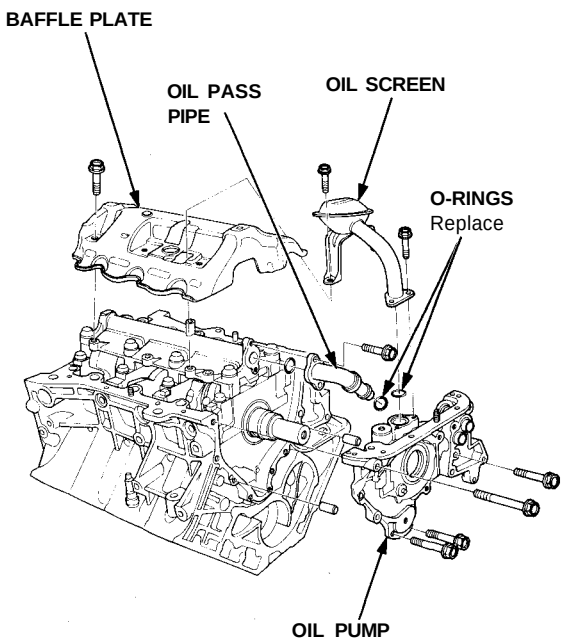

3. Remove the baffle plate.
4. Remove the oil pass pipe and joint.
5. Remove the oil pump.
6. If you can feel a ridge of metal or hard carbon around the top of any cylinder, remove it with a ridge reamer. Follow reamer manufacturer's instructions.

CAUTION: If the ridge is not removed, it may damage the pistons as they are pushed out.

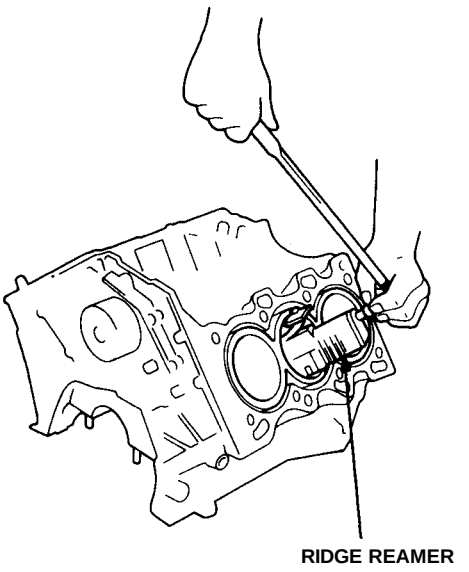

7. Remove the bearing cap bridge.

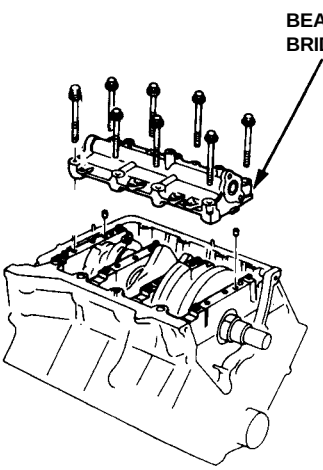

(cont'd)

Piston/Connecting Rod Assemblies and Crankshaft

Removal (cont'd)

- Remove the connecting rod caps after setting the crank pin at BDC for each cylinder. Remove the piston assembly by pushing on the connecting rod.

CAUTION: Take care not to damage the crank pin or cylinder with the connecting rod.

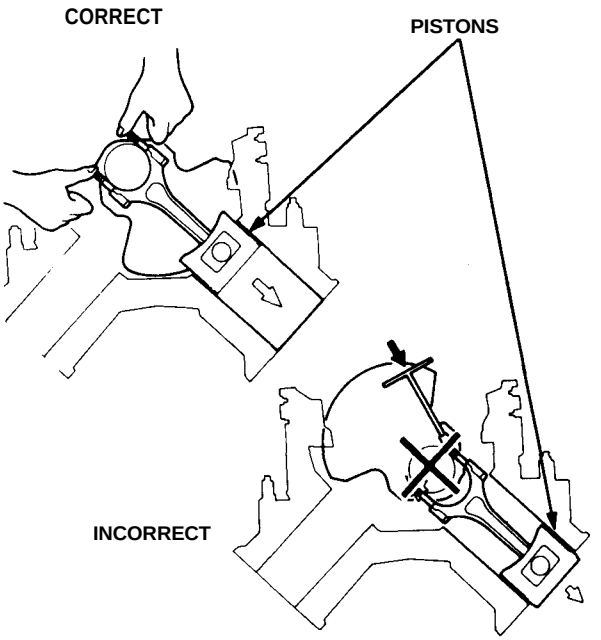

8. Remove the bearing from the cap. Keep all caps/bearings in order.

9. Remove the upper bearing halves from the connecting rods. Set them aside with their respective caps.

10. Reinstall the cap on the rod after removing each piston/connecting rod assembly.

11. Mark the piston/connecting rod assemblies with their cylinder numbers to avoid mixup on reassembly.

NOTE: The existing number on the connecting rod does not indicate its position in the engine, it indicates the rod bore size.

12. Remove the bearing cap bolts and bearing cap side bolts, then remove the bearing caps.

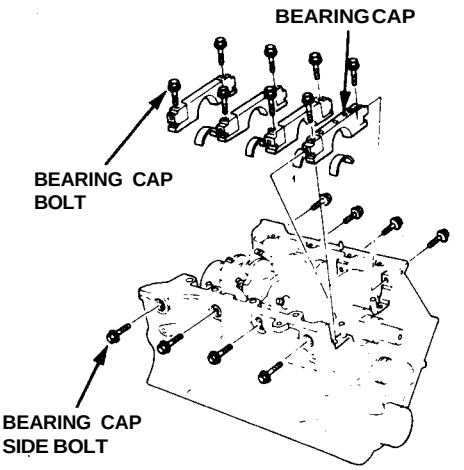

- To help with removal of the caps, install the bearing cap bridge bolts in the bearing cap bolt holes.

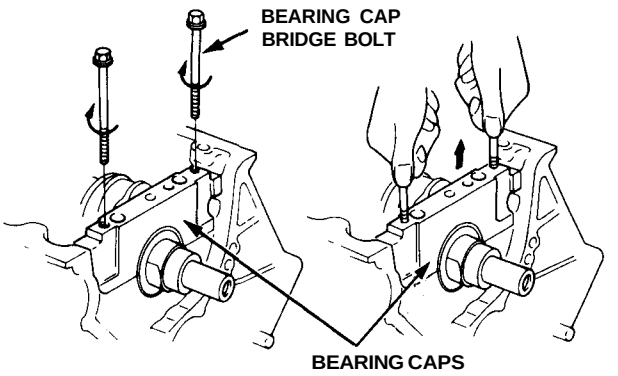

13. Lift the crankshaft out of engine, being careful not to damage the journals.

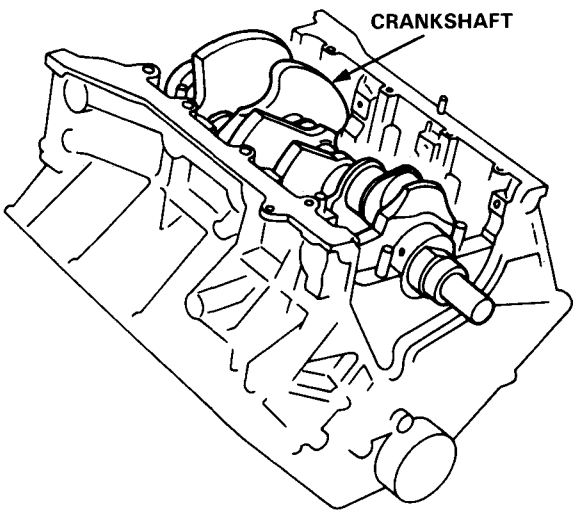

14. Reinstall the main caps and bearings on the block in proper order.

Crankshaft

Inspection

- Clean the crankshaft oil passages with pipe cleaners or a suitable brush.
- Check the keyway and threads.

Alignment

- Measure runout on all main journals to make sure the crank is not bent.
- The difference between measurements on each journal must not be more than the service limit.

Crankshaft Total Indicated Runout:
Standard (New): 0.015 mm (0.0006 in) max.
Service Limit: 0.03 mm (0.0012 in)

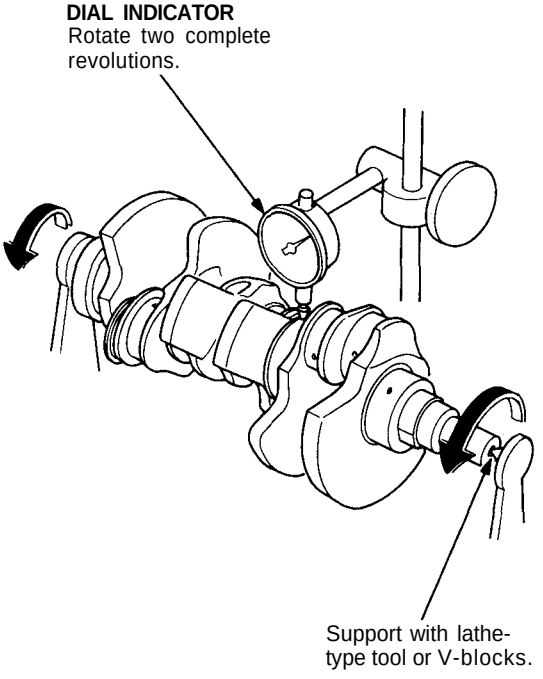

Out-of-Round and Taper

- Measure out-of-round at the middle of each rod and main journal in two places.
- The difference between measurements on each journal must not be more than the service limit.

Journal Out-of-Round:
Standard (New): 0.004 mm (0.0002 in) max.
Service Limit: 0.006 mm (0.0002 in)

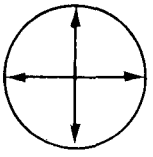

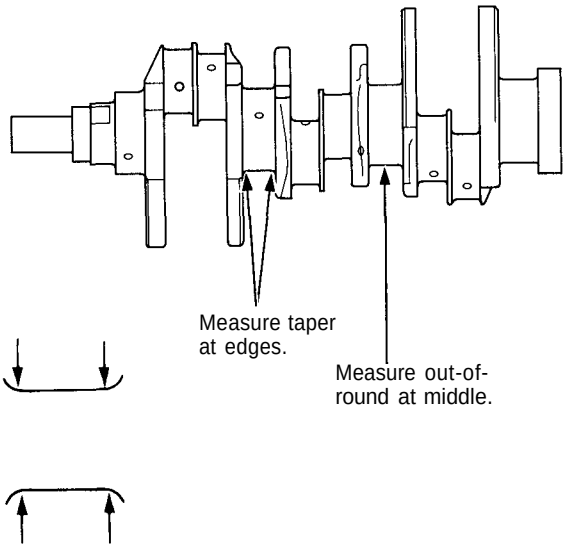

- Measure taper at edges of each rod and main journal.
- The difference between measurements on each journal must not be more than the service limit.

Journal Taper:
Standard (New): 0.005 mm (0.0002 in) max.
Service Limit: 0.010 mm (0.0004 in)

Cylinder Block

Inspection

1. Measure wear and taper in directions X and Y at three levels in each cylinder as shown.

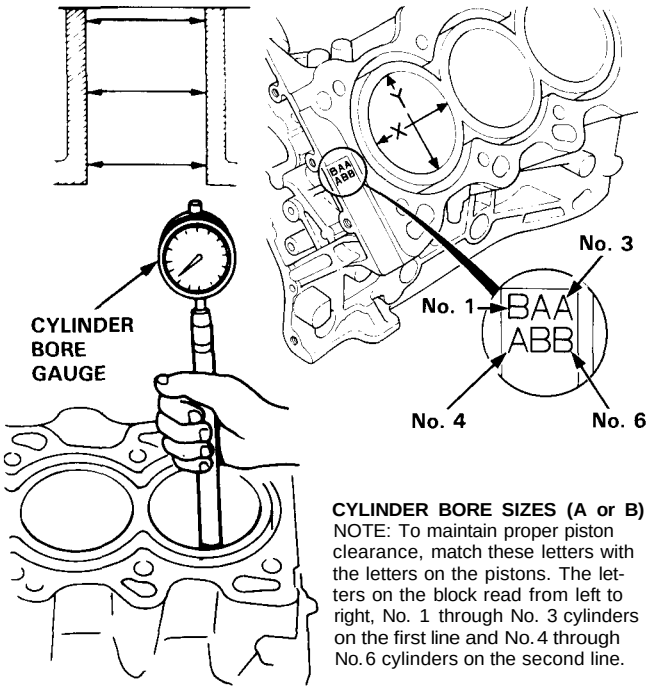

CYLINDER BORE SIZES (A or B)
NOTE: To maintain proper piston clearance, match these letters with the letters on the pistons. The letters on the block read from left to right, No. 1 through No. 3 cylinders on the first line and No. 4 through No. 6 cylinders on the second line.

Cylinder Bore Size
M/T:
Standard (New):
A or I 93.010 - 93.020 mm (3.6618 -3.6622 in)
B or il 93.000 - 93.010 mm (3.6614-3.6618 in)
Service Limit: 93.07 mm (3.664 in)
A/T:
Standard (New):
A or I 90.010 - 90.020 mm (3.5437 -3.5441 in)
B or il 90.000 - 90.010 mm (3.5433 -3.5437 in)
Service Limit: 90.07 mm (3.546 in)

Oversize (A/T):
0.25: 90.25 - 90.26 mm (3.553 - 3.554 in)
0.50: 90.50 - 90.51 mm (3.563 - 3.563 in)

Bore Taper
Limit: (Difference between first and third measurement) 0.05 mm (0.002 in)

- If measurements in any cylinder are beyond Oversize Bore Service Limit, replace the block.
- If block is to be rebored, refer to Piston Clearance Inspection (see page 7-13) after reboring.

NOTE: Scored or scratched cylinder bores must be honed.

Reboring Limit (A/T): 0.50 mm (0.020 in)

2. Check the top of the block for warpage.
Measure along the edges and across the center as shown.

SURFACES TO BE MEASURED

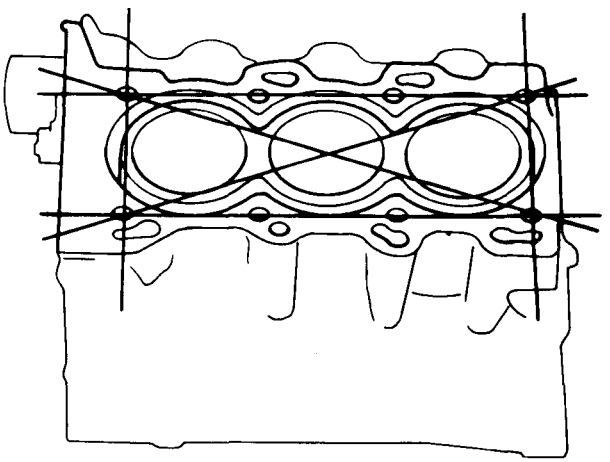

Engine Block Warpage:
Standard (New): 0.07 mm (0.003 in) max.
Service Limit: 0.10 mm (0.004 in)

PRECISION STRAIGHT EDGE

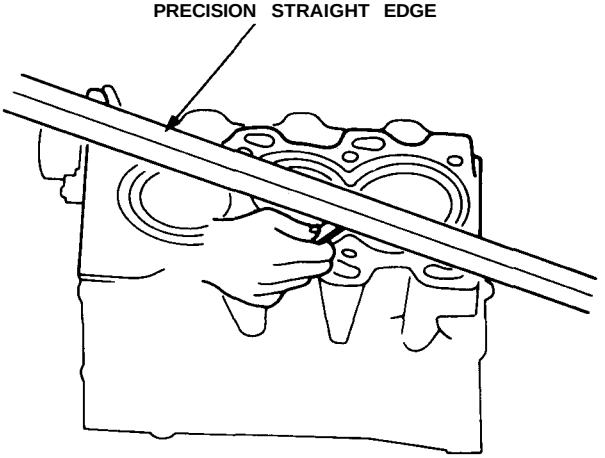

Bore Honing (A/T)

NOTE: Only scored or scratched cylinder bores must be honed.

1. Measure cylinder bores as shown on page 7-12. If the block is to be reused, hone the cylinders and remeasure the bores.
2. Hone cylinder bores with honing oil and a fine (400 grit) stone in a 60 degree cross-hatch pattern.

   NOTE:
   - Use only a rigid hone with 400 grit or finer stone such as Sunnen, Ammco, or equivalent.
   - Do not use stones that are worn or broken.

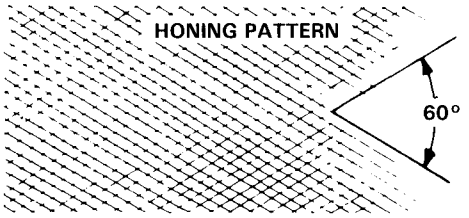

3. When honing is complete, thoroughly clean the cylinder block of all metal particles. Wash the cylinder bores with hot soapy water, then dry and oil them immediately to prevent rusting.

   NOTE: Never use solvent, it will only redistribute the grit on the cylinder walls.

4. If scoring or scratches are still present in cylinder bores after honing to service limit, rebore the cylinder block.

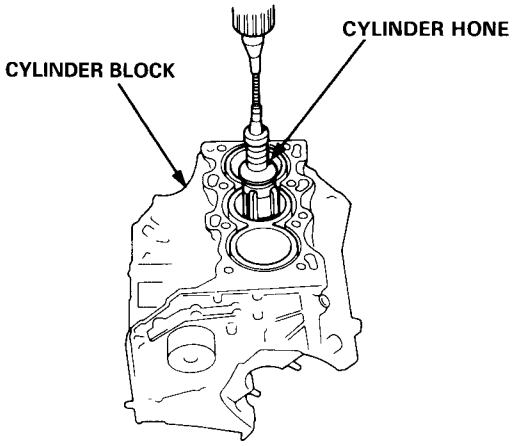

Inspection

1. Check the piston for distortion or cracks.

   NOTE: If cylinder is bored, an oversized piston must be used.

2. Measure piston diameter at a point 17 mm (0.67 in) from the bottom of the skirt.

   NOTE: There are two standard-size pistons (A = no letter and B). The letter is stamped on the top of the piston. These letters are also stamped on the block as cylinder bore sizes.

M/T:
Piston A (no letter) Diameter
Standard (New): 92.990 - 93.003 mm (3.6610-3.6615 in)
Service Limit: 92.97 mm (3.6602 in)
Piston B Diameter
Standard (New): 92.980 - 92.993 mm (3.6606-3.6611 in)
Service Limit: 92.96 mm (3.6598 in)
A/T:
Piston A (no letter) Diameter
Standard (New): 89.986 - 90.004 mm (3.5427 - 3.5435 in)
Service Limit: 89.97 mm (3.5421 in)
Piston B Diameter
Standard (New): 89.976 - 89.994 mm (3.5424 - 3.5431 in)
Service Limit: 89.96 mm (3.5417 in)

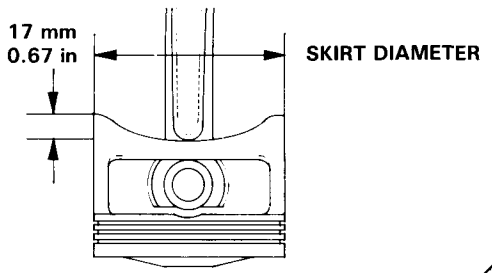

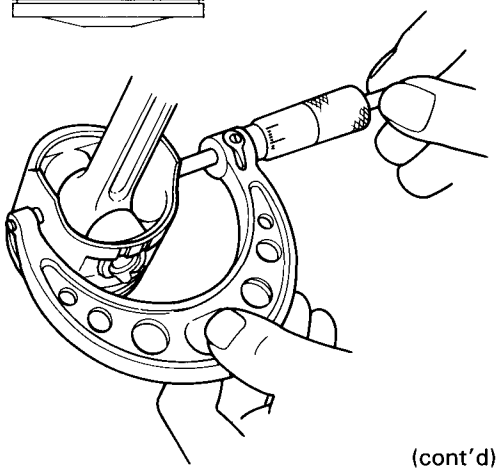

(cont'd)

Piston/Connecting Rod Assemblies

Inspection (cont'd)

3. Calculate the difference between cylinder bore diameter on page 7-12 and piston diameter.

Piston-to-Block Clearance
M/T:
Standard (New): 0.007 – 0.030 mm (0.0002 – 0.0012 in)
Service Limit: 0.0785 mm (0.0031 in)
A/T:
Standard (New): 0.006 – 0.034 mm (0.0002 – 0.0014 in)
Service Limit: 0.0825 mm (0.0032 in)

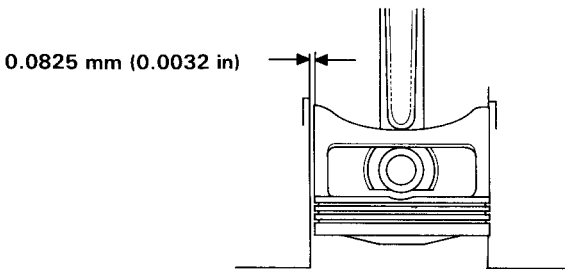

Oversize Piston Diameter (A/T)
0.25: 90.226 – 90.244 mm (3.5522 – 3.5529 in)
0.50: 90.476 – 90.494 mm (3.5620 – 3.5627 in)

Connecting Rods

Selection

Each rod is sorted into one of four tolerance ranges (from O to 0.024 mm, in 0.006 mm increments) depending on the size of its big end bore. It's then stamped with a number (1, 2, 3 or 4) indicating that tolerance. You may find any combination of 1, 2, 3 or 4 in any engine.

Normal Bore Size: 55 mm (2.17 in)

NOTE:

- Reference numbers are for big end bore size and do NOT indicate the position of the rod in the engine.
- Inspect each connecting rod for cracks and heat damage.

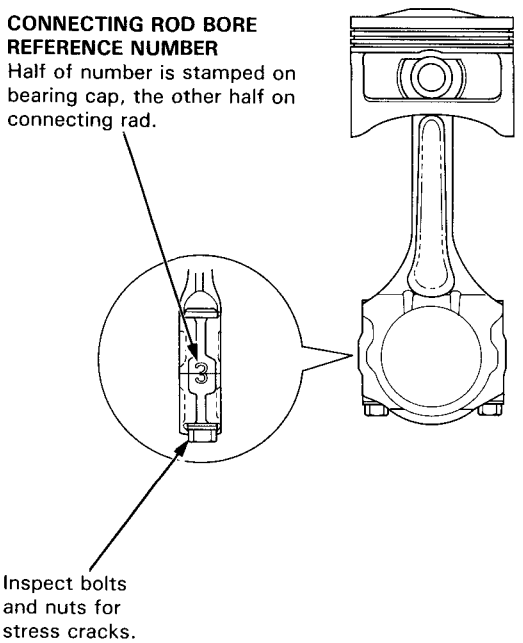

Piston Rings

End Gap

1. Using a piston, push a new ring into the cylinder bore 15-20 mm (0.6 - 0.8 in) from the bottom.

2. Measure the piston ring end-gap with a feeler gauge:

   - If the gap is too small, check to see if you have the proper rings for your engine.

   - If the gap is too large, recheck the cylinder bore diameter against the wear limits on page 7-12. If the bore is over limit, the cylinder block must be rebored.

Piston Ring End-Gap:

Top Ring
M/T:
Standard (New): 0.20 - 0.30 mm (0.008-0.012 in)
Service Limit: 0.50 mm (0.020 in)
A/T:
Standard (New): 0.25 - 0.40 mm (0.010-0.016 in)
Service Limit: 0.60 mm (0.024 in)

Second Ring
Standard (New): 0.35 - 0.50 mm (0.014-0.020 in)
Service Limit: 0.75 mm (0.03 in)

Oil Ring
Standard (New): 0.20 - 0.70 mm (0.008 - 0.028 in)
Service Limit: 0.80 mm (0.031 in)

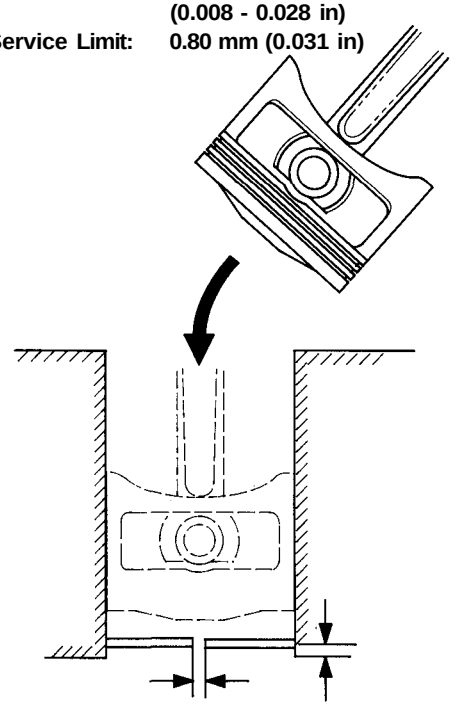

Replacement

1. Using a ring expander, remove the old piston rings.

2. Clean all ring grooves thoroughly.

   NOTE:
   - Use a squared-off broken ring or ring groove cleaner with blade to fit piston grooves.
   - Top and 2nd ring grooves are 1.2 mm (0.05 in) wide and the oil ring groove is M/T: 2.5 mm (0.10 in), A/T: 2.8 mm (0.11 in) wide.
   - File down the blade if necessary.

   CAUTION: Do not use a wire brush to clean the ring grooves, or cut ring grooves deeper with a cleaning tool.

3. Install new rings in the proper sequence and position (see page 7-16).

   NOTE: Do not reuse old piston rings.

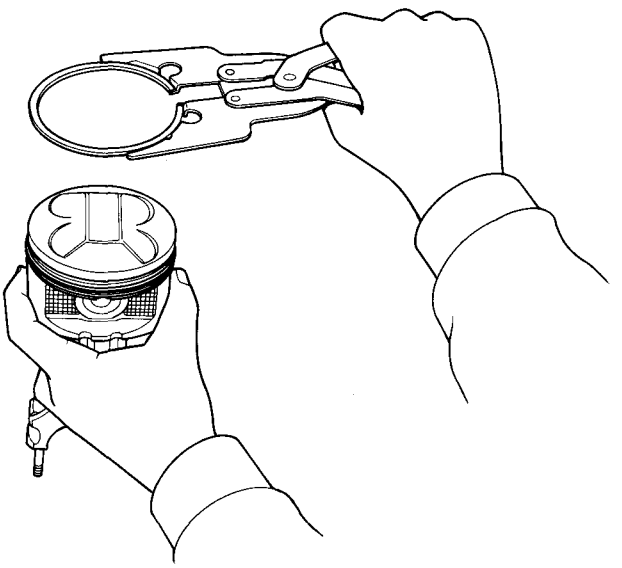

Piston Rings

Ring-to-Groove Clearances

After installing a new set of rings, measure ring-to-groove clearances:

Top Ring Clearance
M/T:
Standard (New): 0.035 - 0.065 mm (0.0014-0.0026 in)
Service Limit: 0.13 mm (0.005 in)
A/T:
Standard (New): 0.030 - 0.055 mm (0.0012 - 0.0022 in)
Service Limit: 0.13 mm (0.005 in)

Second Ring Clearance
M/T:
Standard (New): 0.030 - 0.060 mm (0.0012-0.0024 in)
Service Limit: 0.13 mm (0.005 in)
A/T:
Standard (New): 0.030 - 0.055 mm (0.0012-0.0022 in)
Service Limit: 0.13 mm (0.005 in)

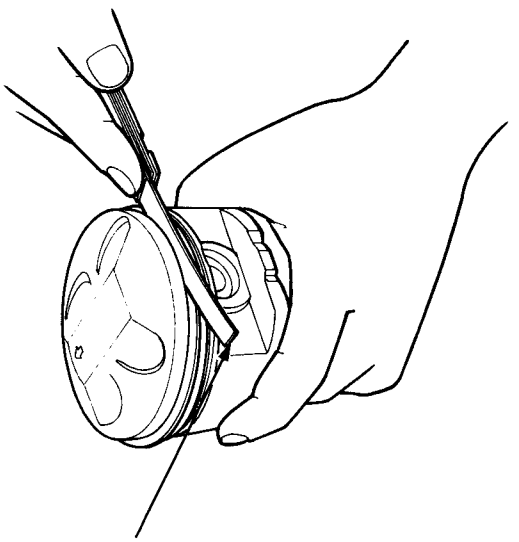

FEELER GAUGE

Piston Rings

Alignment

1. Install the rings as shown.

NOTE:
- The top ring has an R1 or R mark.
- The second ring has an R2 or RN mark.

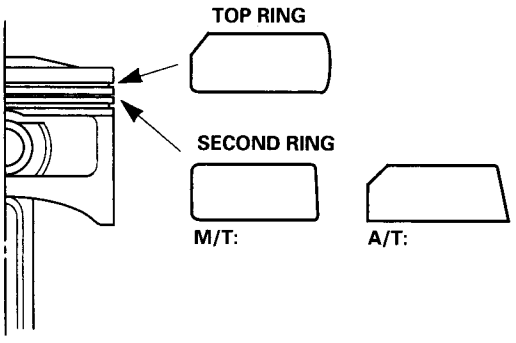

Piston Ring Dimensions:

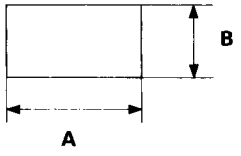

Top Ring (Standard):
A: 3.6 mm (0.14 in)*1
3.3 mm (0.13 in)*2
B: 1.2 mm (0.05 in)

Second Ring (Standard):
A: 3.75 mm (0.148 in)*1
3.8 mm (0.15 in)*2
B: 1.2 mm (0.05 in)

NOTE: The manufacturing marks must be facing upward.

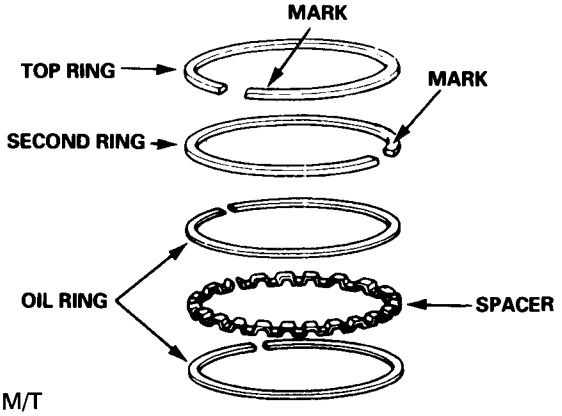

*1: M/T
*2: A/T

2. Rotate the rings in their grooves to make sure they do not bind.

3. Position the ring end gaps as shown:

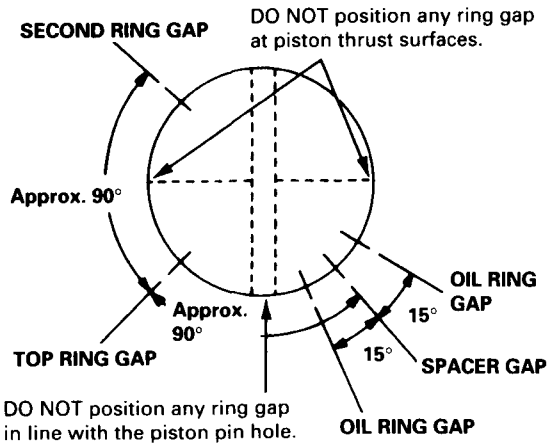

Piston/Connecting Rod Assemblies

Installation

OIL

Before installing the piston, apply a coat of engine oil to the ring grooves and cylinder bores.

1. If the crankshaft is already installed:
   - Guide the piston carefully to prevent damage.
   - Fit long rubber hoses (about 30 cm (12 in) long) to the connecting rod bolts to protect the crankshaft.
   - Install the pistons after setting the crankshaft to BDC for each cylinder.

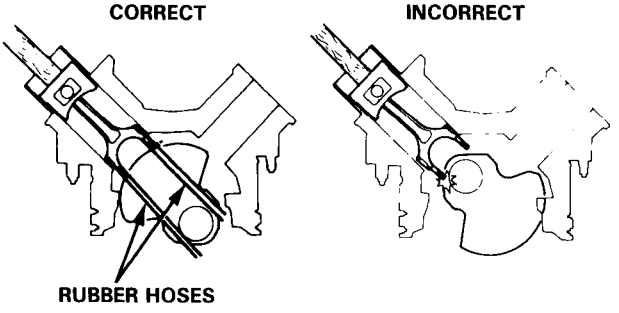

- Install the piston assemblies in No. 1 and No. 4 cylinders. No. 2 and No. 5 cylinders, and No. 3 and No. 6 cylinders.
- Install the ring compressor, check that the bearing is securely in place; then position the piston in the cylinder and tap it in using the wooden handle of a hammer.
- Stop after the ring compressor pops free and check the connecting rod-to-crank journal alignment before putting rod into place.
- Install the rod caps with bearings, and torque the nuts to 20 N-m (2.0 kgf-m, 14 lbf-ft), then turn the nut 116 degrees (see page 7-20).

(cont'd)

Piston/Connecting Rod Assemblies

Installation (cont'd)

2. If the crankshaft is not installed:
   - Remove the rod caps and bearings, install the ring compressor, then position the piston in the cylinder and tap it in using the wooden handle of a hammer.

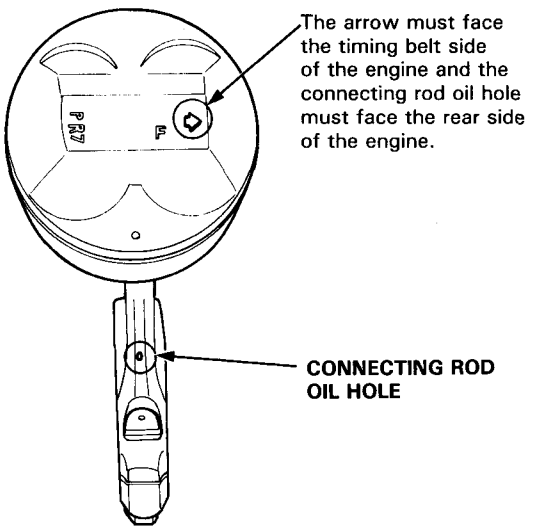

NOTE: Maintain downward force on the ring compressor to prevent rings from expanding before entering the cylinder bore.

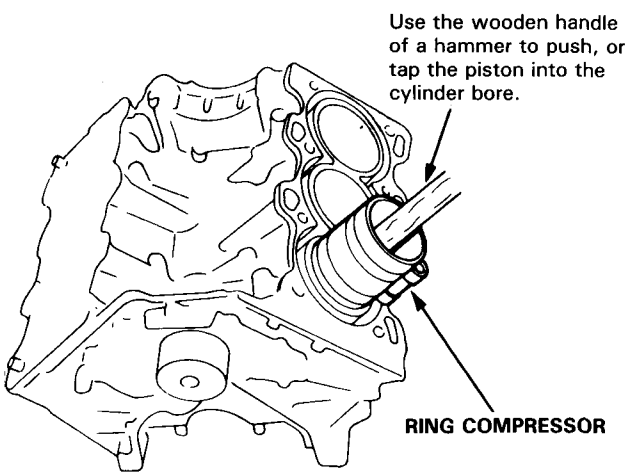

Oil Seal

Installation

OIL The seal surface on the block should be dry. Apply a light coat of oil to the crankshaft and to the lip of the seal.

1. Using the special tools, drive in the flywheel-end seal until the driver bottoms against left side cover.

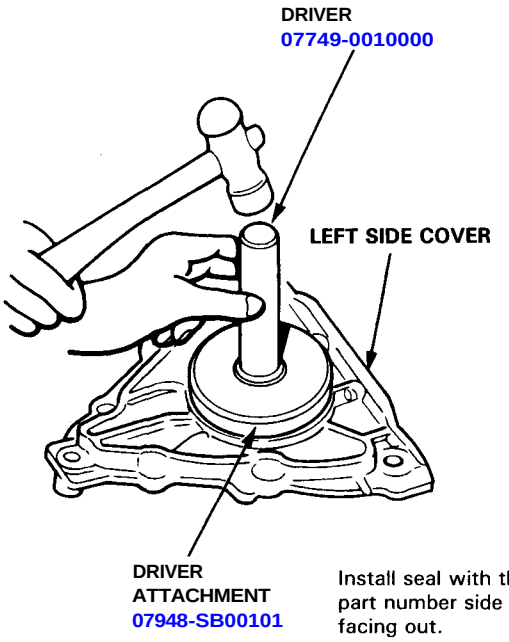

2. Confirm clearance is equal all the way around with a feeler gauge.

Clearance: 0.2 – 0.5 mm (0.008 – 0.020 in)

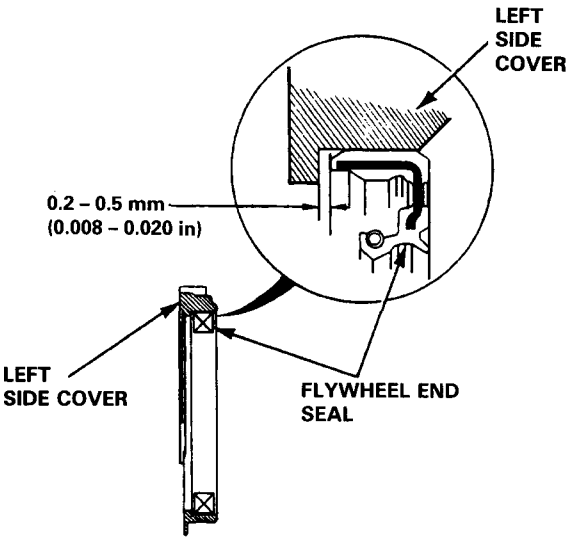

NOTE: Refer to page 8-9 for installation of the oil pump side oil seal.

Crankshaft

Installation

Before installing the crankshaft, apply a coat of engine oil to the main bearings and rod bearings.

1. Insert bearing halves in the engine block and connecting rods.

2. Lower the crankshaft into the block.

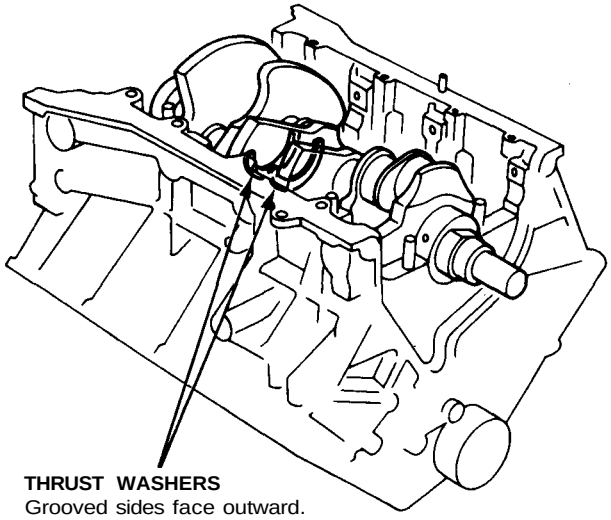

THRUST WASHERS
Grooved sides face outward.

3. Install the thrust washers on the No. 3 journal. Oil thrust washer surfaces.

4. Install the bearings and caps. Tighten 9 x 1.25 mm cap bolts to the specified torque.

Torque: 39 N-m (4.0 kgf-m, 29 lbf-ft)

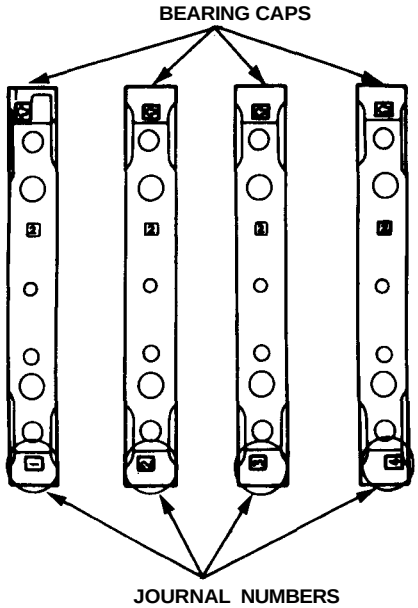

NOTE:
- Guide the piston carefully to prevent damage.
- Fit long rubber hoses (about 30 cm long) to connecting rod bolts to protect the crankshaft.
- Install the pistons after setting the crankshaft to BDC for each cylinder.

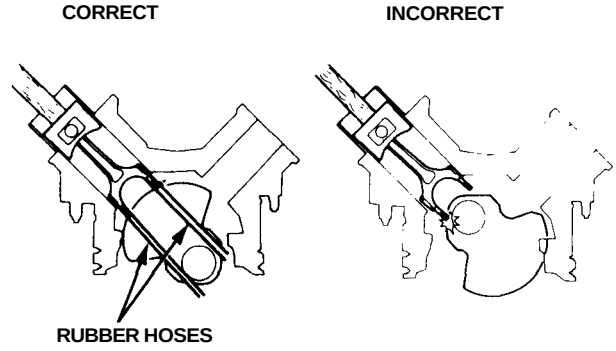

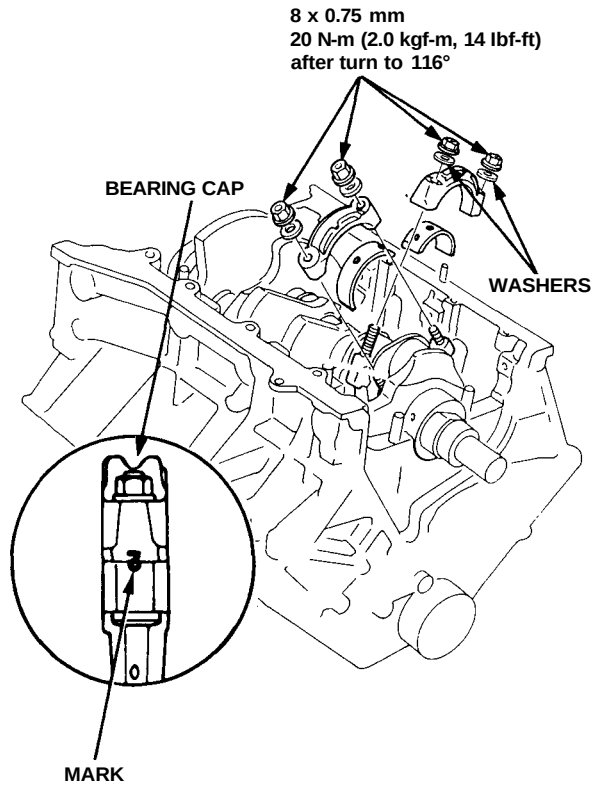

- Line up the marks when installing connecting rod cap.

(cont'd)

Installation (cont'd)

5. Check the rod bearing clearance with plastigage (see page 7-7), then torque the connecting rod cap nuts.

NOTE: Reference numbers on connecting rods are for big-end bore tolerance and do NOT indicate the position of piston in engine.

CONNECTING ROD CAP NUT TORQUING METHOD

1) Torque the connecting rod cap nut to 20 N-m (2.0 kgf-m, 14 lbf-ft) with a beam-type torque wrench.
2) Install a torque angle gauge to the cap nut, then turn the cap nut 116 degrees.

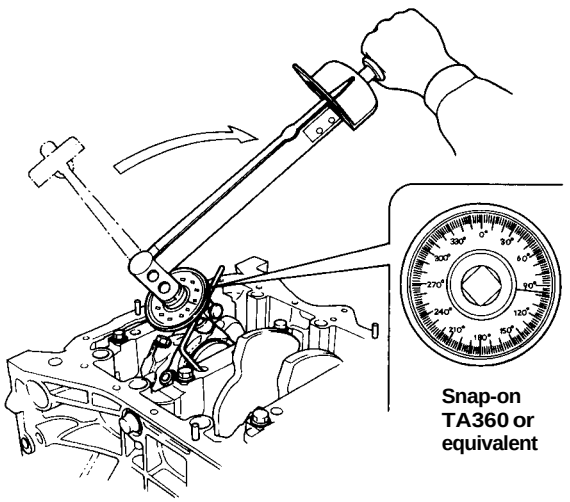

Snap-on TA360 or equivalent

BEARING CAP BOLTS TORQUE SEQUENCE

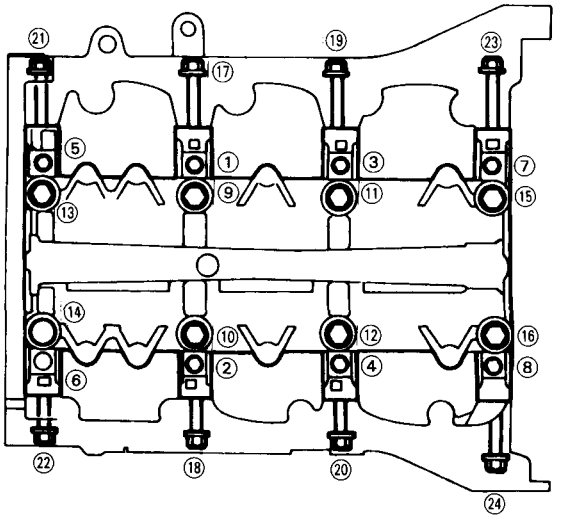

6. Install the bearing cap bridge, and tighten 11 x 1.5 mm bolts to the specified torque diagonally outward from the center.

Torque: 65 N-m (6.6 kgf-m, 48 lbf-ft)

7. Tighten cap side bolts (10 x 1.25 mm) to the specified torque.

Torque: 49 N-m (5.0 kgf-m, 36 lbf-ft)

- Coat the bolt thread and seat surface with engine oil.

NOTE: The shorter side bolts are for the front side.

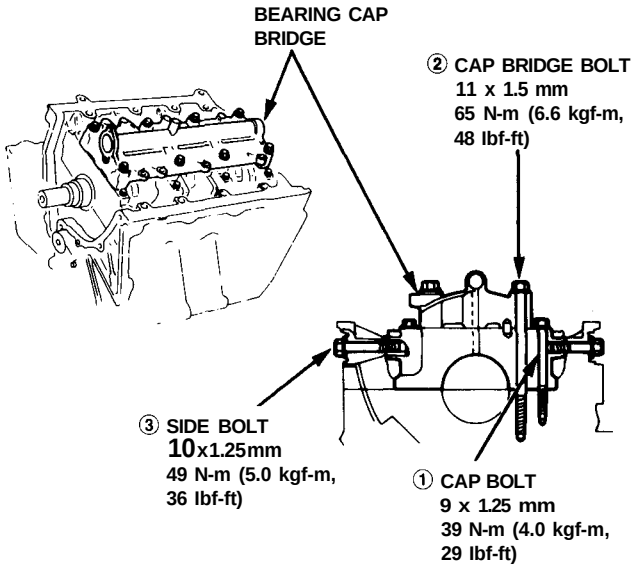

8. Apply liquid gasket to the block mating surface of the left side cover and oil pump case, and install them on the engine block.

NOTE: The seal surface on the block should be dry. Apply a light coat of oil to the crankshaft and to the lip of seal.

LEFT SIDE:

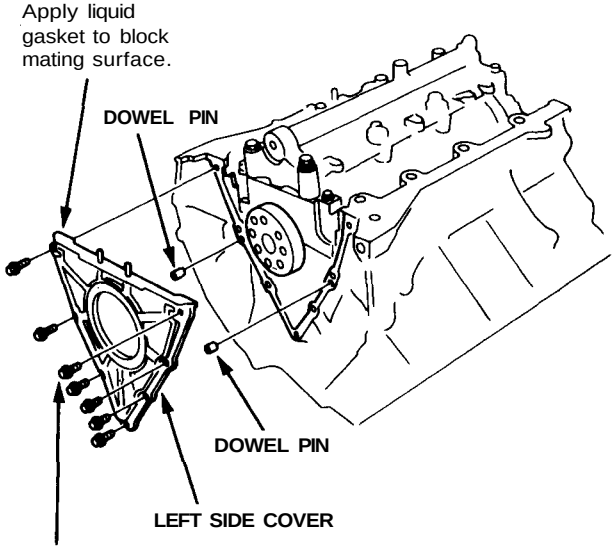

OIL PUMP SIDE:

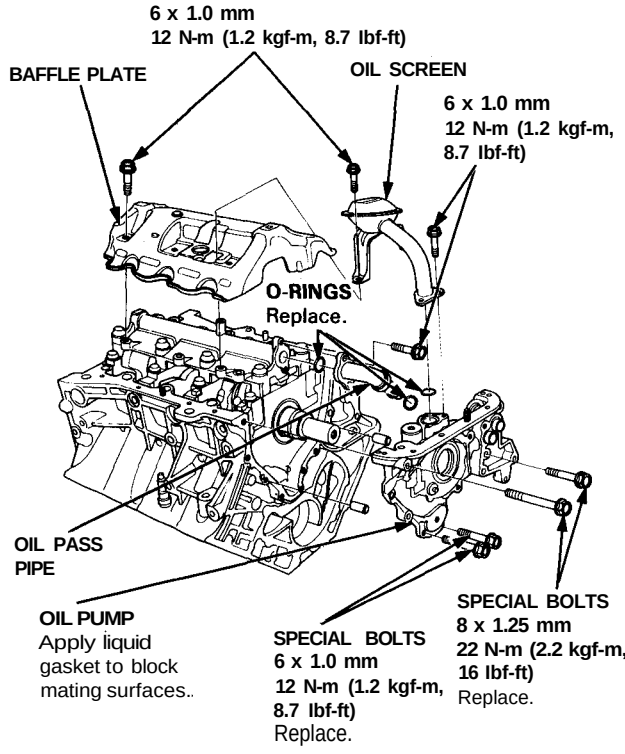

NOTE:

- Use liquid gasket. Part No. 08718-0001 or 08718 - 0003.
- Check that the mating surfaces are clean and dry before applying liquid gasket.
- Apply liquid gasket evenly, being careful to cover all of the mating surface.
- To prevent leakage of oil, apply liquid gasket to the inner threads of the bolt holes.

(cont'd)

Installation (cont'd)

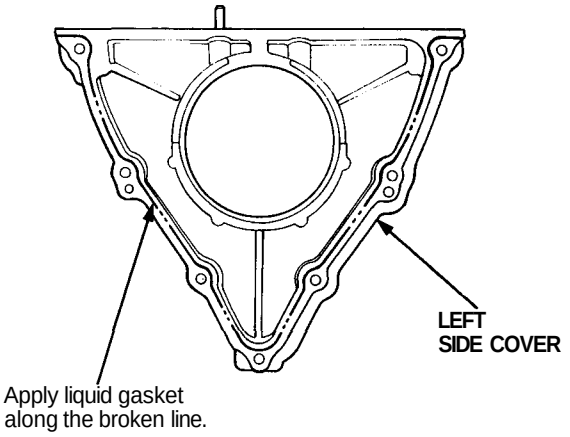

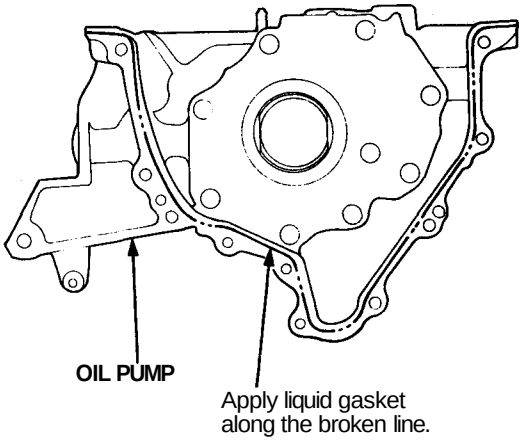

- Do not install the parts if five minutes or more have elapsed since applying liquid gasket. Instead reapply liquid gasket after removing old residue.
- After assembly, wait at least 20 minutes before filling the engine with oil.

9. Install the oil pass pipe and joint.
10. Install the baffle plate.
11. Install the oil screen.
12. Install the oil pan (see page 8-10).

CAUTION: Whenever any crankshaft or connecting rod bearing is replaced, after reassembly, run the engine at idling speed until it reaches normal operating temperature, then continue to run for approximately 15 minutes.

Engine Lubrication

Special Tools 8–2
Component Location Index 8–3
Engine Oil
- ’97 Model
  - Inspection 8–4
  - Replacement 8–4
- ’98–’05 Models
  - Inspection 8–2a
  - Replacement 8–2a

Oil Filter
- Replacement 8–5

Oil Pressure
- Testing 8–6

Oil Pump
- Overhaul 8–7
- Removal/Inspection/Installation 8–8

Oil Cooler, Oil Filter Base
- Component Location Index 8–12

Special Tools

Ref. No.	Tool Number	Description	Qty	Page Reference
①	07GAD–PH70201	Oil Seal Driver	1	8-9
②	07912–6110001	Oil Filter Wrench	1	8-5

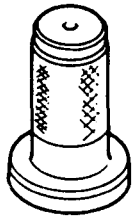

①

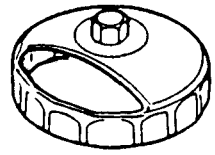

②

Engine Lubrication

Illustrated Index

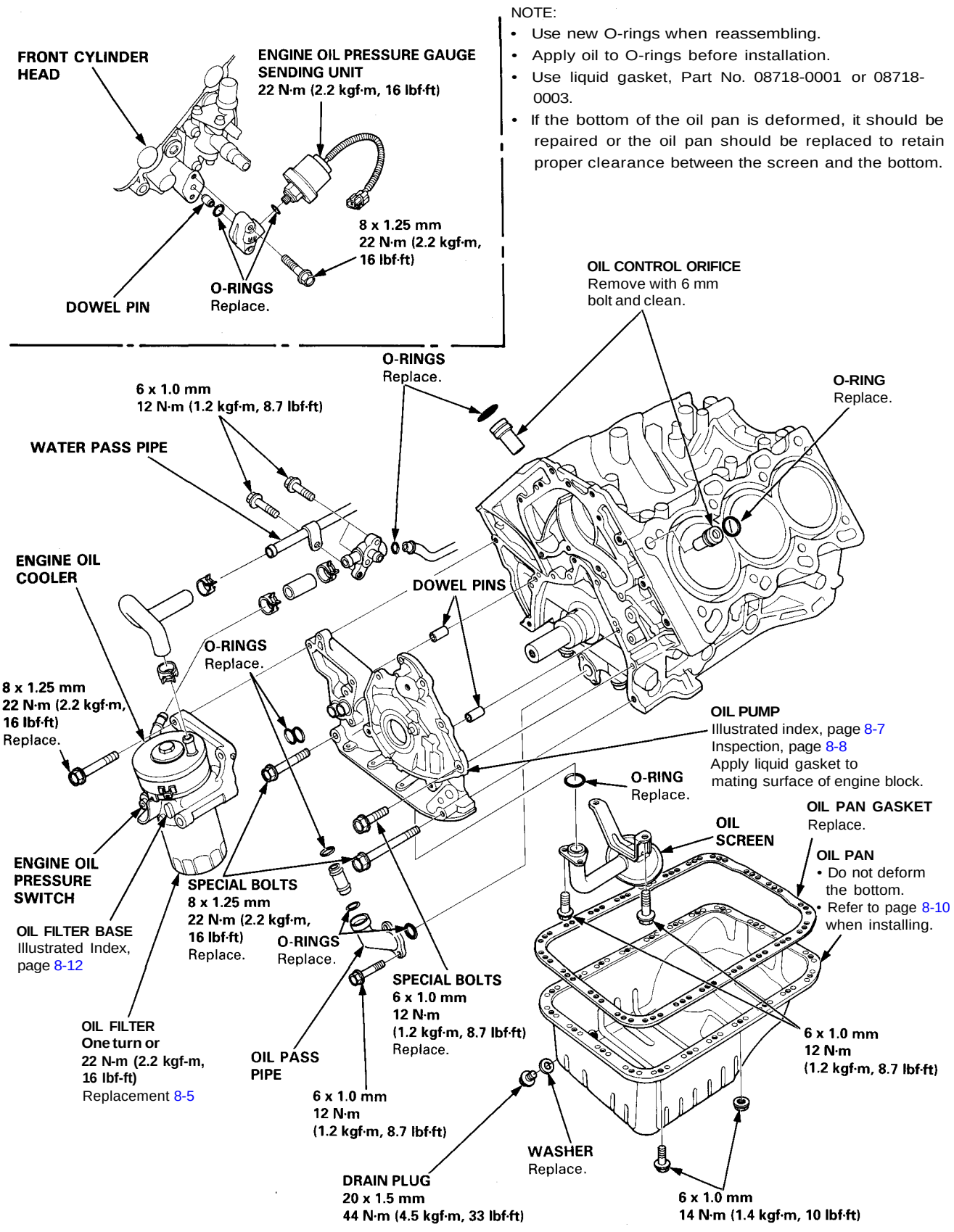

Engine Oil

Inspection

1. Check engine oil with the engine off and the car parked on level ground.

2. Make certain that the oil level indicated on the dipstick is between the upper and lower marks.

3. If the level has dropped close to the lower mark, add oil until it reaches the upper mark.

   CAUTION: Insert the dipstick carefully to avoid bending it.

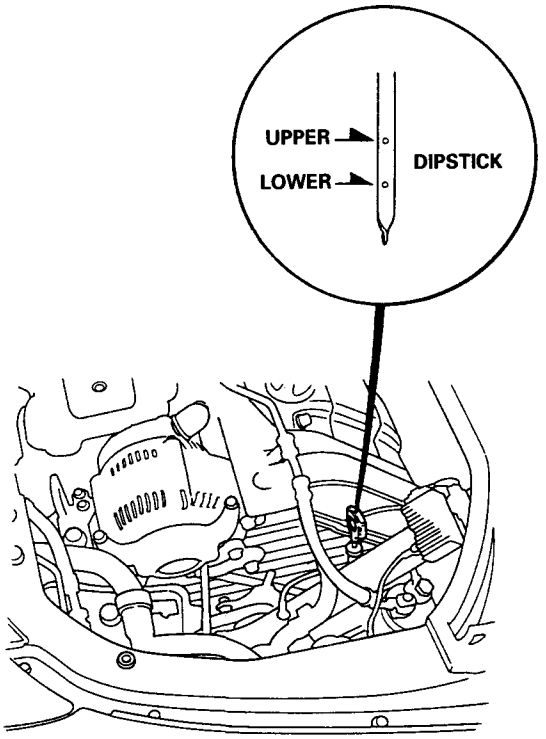

Replacement

CAUTION: Remove the drain plug carefully while the engine is hot, the hot oil may cause scalding.

1. Warm up the engine.
2. Drain the engine oil.

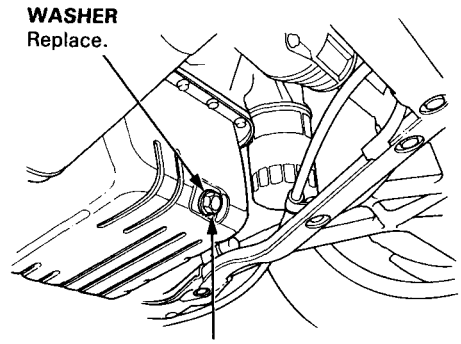

3. Reinstall the drain plug with a new washer, and refill with the recommended oil.

Requirement	API Service Grade: Use "Energy Conserving" SJ or "Energy Conserving II" SH grade oil. SAE 10W – 30 preferred. You can also use oil from a container that bears the API CERTIFICATION seal.
Capacity	5.0 ℓ (5.3 US qt, 4.4 Imp qt) at change, including filter. 6.3 ℓ (6.7 US qt, 5.5 Imp qt) after engine overhaul.
Change	Every 7,500 miles (12,000 km) or 6 months whichever comes first (Normal conditions). Every 3,750 miles (6,000 km) or 3 months whichever comes first (Severe conditions).

NOTE: Under normal conditions, the oil filter should be replaced at every other oil change. Under severe conditions, the oil filter should be replaced at each oil change.



API CERTIFICATION SEAL

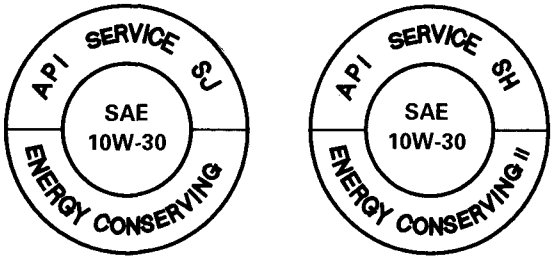

API SERVICE LABEL

The numbers in the middle of the API Service label tell you the oil's SAE viscosity or weight. Select the oil for your vehicle according to this chart:

Ambient Temperature

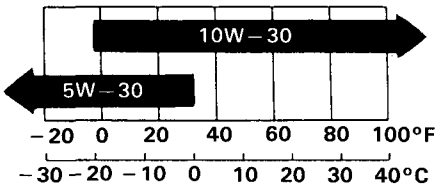

An oil with a viscosity of 10W-30 is preferred for improved fuel economy and year-round protection in the vehicle.
You may use a 5W-30 oil if the climate in your area is limited to the temperature range shown on the chart.

4. Fill the engine with oil up to the specified level, run the engine for more than three minutes, then check for oil leakage and oil level.

Oil Filter

Replacement

CAUTION: Loosen the oil filter carefully while the engine is hot, the hot oil may cause scalding.

1. Remove the oil filter with the special tool as shown.

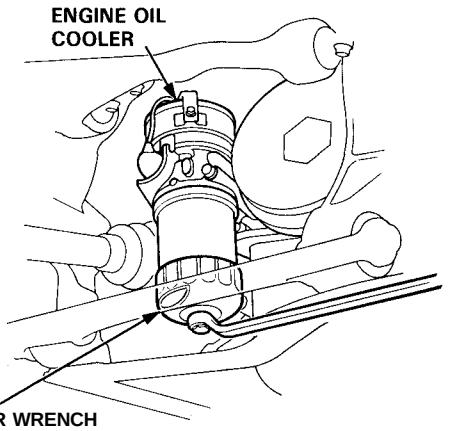

OIL FILTER WRENCH
07912-6110001
Torque: One turn
(22 N-m (2.2 kgf-m, 16 lbf-ft))

2. Inspect the threads and rubber seal on the new filter. Wipe off the seat on oil filter base, then apply a light coat of oil to the rubber seal and install the filter.

3. After the rubber seal is seated against the base, tighten the oil filter by turning it approximately one turn.

Torque: One turn (22 N-m (2.2 kgf-m, 16 lbf-ft))

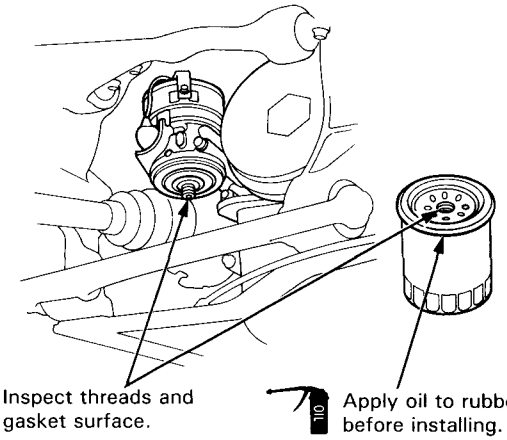

4. Start the engine, and check the filter for oil leakage.

Oil Pressure

Testing

If the oil pressure warning light stays on with the engine running, check the engine oil level. If the oil level is correct:

1. Remove the engine oil pressure switch, and install an oil pressure gauge.

2. Start the engine. Shut it off immediately if the gauge registers no oil pressure. Repair the problem before continuing.

3. Allow the engine to reach operating temperature (fan comes on at least twice). The pressure should be:

Engine Oil Pressure:
At Idle: 70 kPa (0.7 kgf/cm^2,10 psi) minimum
At 3,000 rpm: 340 kPa (3.5 kgf/cm^2, 50 psi) minimum

- If oil pressure is within specifications, replace the oil pressure sender and recheck.

- If oil pressure is NOT within specifications, inspect the oil pump (see page 8-8).

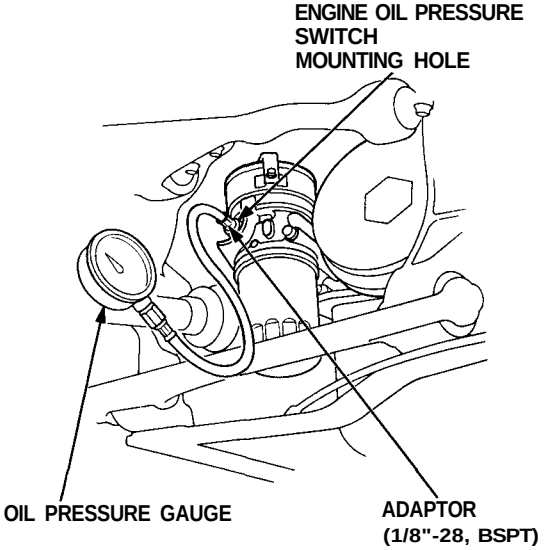

Oil Pump

Overhaul

NOTE:
- Use new O-rings when reassembling.
- Apply oil to O-rings before installation.

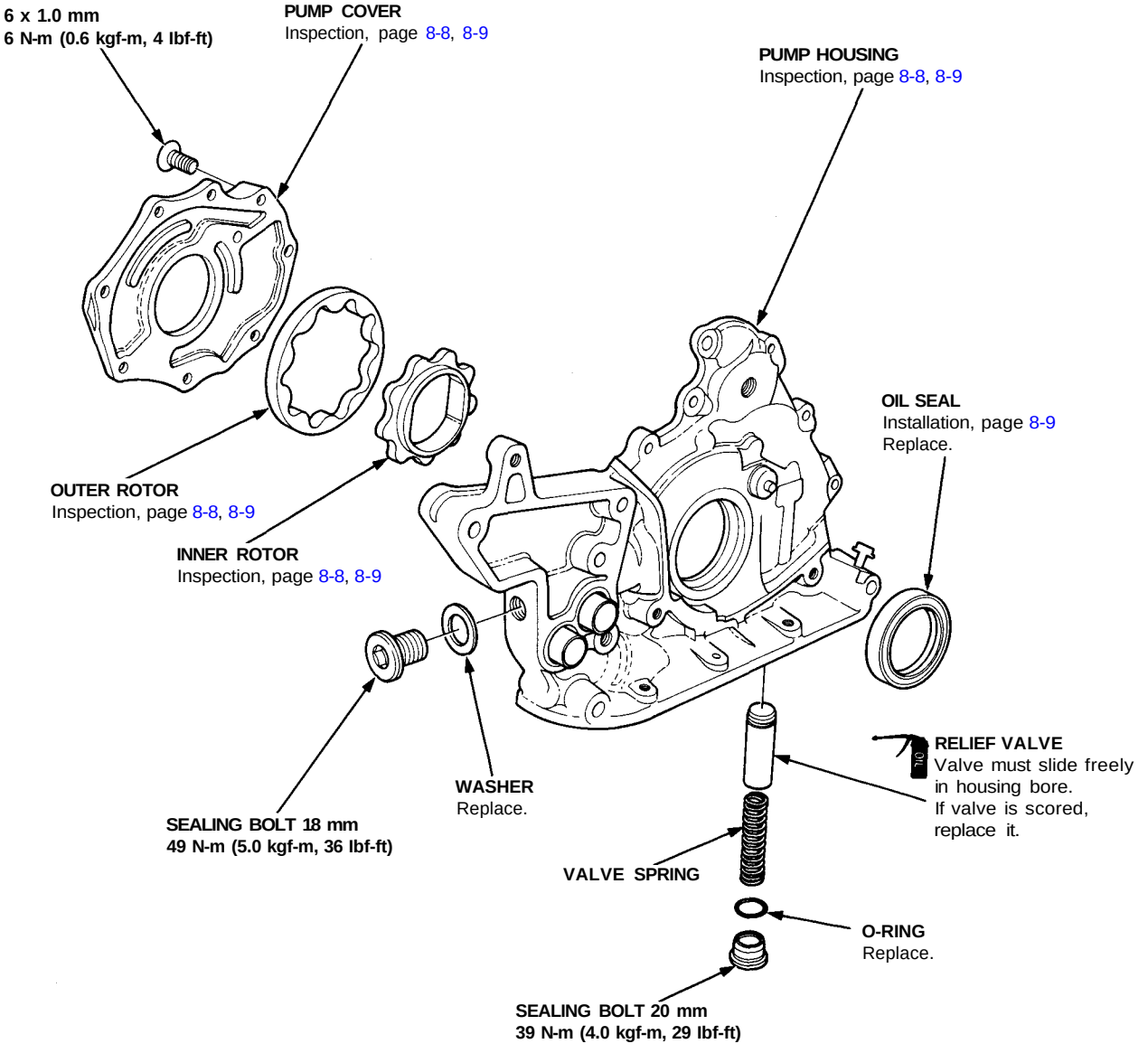

Oil Pump

Removal/Inspection/Installation

1. Drain the engine oil.
2. Remove the timing belt (see page 6-15).
3. Remove the dipstick and the pipe.
4. Remove the oil filter assembly.
5. Remove the front exhaust manifold (M/T see page 6-24).
6. Remove the oil pan.
7. Remove the oil screen.
8. Remove the baffle plate.
9. Remove the oil pass pipe and the joint.
10. Remove the mounting bolts and the oil pump assembly.

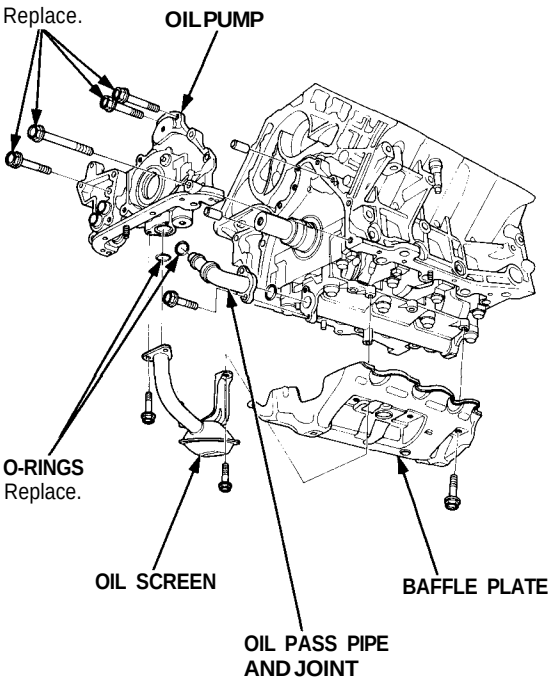

11. Remove the nine screws from the pump housing, then separate the housing and cover.
12. Check the inner-to-outer rotor radial clearance.

Inner-to-Outer Rotor Radial Clearance
Standard (New): 0.05-0.21 mm (0.002-0.008 in)
Service Limit: 0.23 mm (0.009 in)

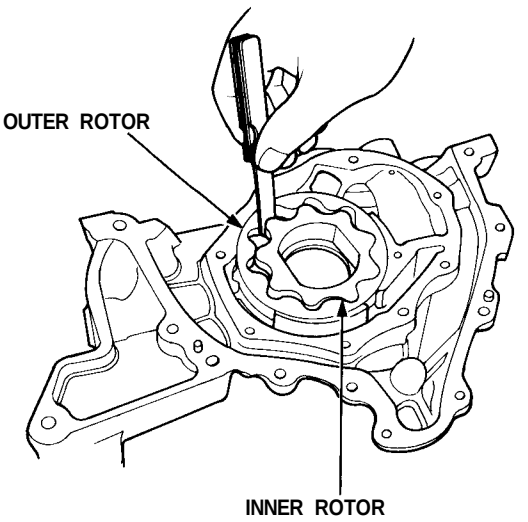

13. Check the housing-to-rotor axial clearance.

Housing-to-Rotor Axial Clearance
Standard (New): 0.02-0.07 mm (0.001-0.003 in)
Service Limit: 0.12 mm (0.005 in)

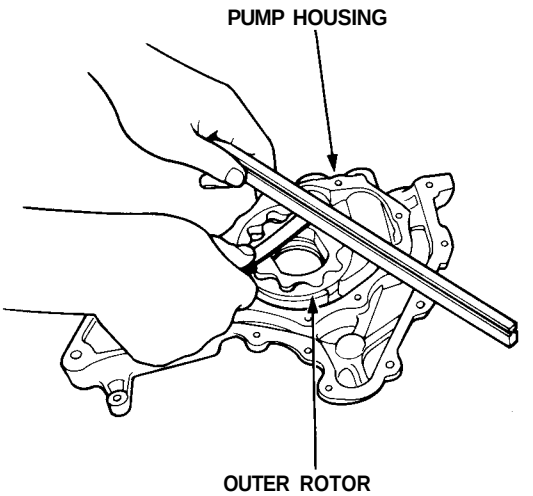

14. Check the housing-to-outer rotor radial clearance.

Housing-to-Rotor Radial Clearance
Standard (New): 0.11 - 0.20 mm (0.004 - 0.008 in)
Service Limit: 0.21 mm (0.008 in)

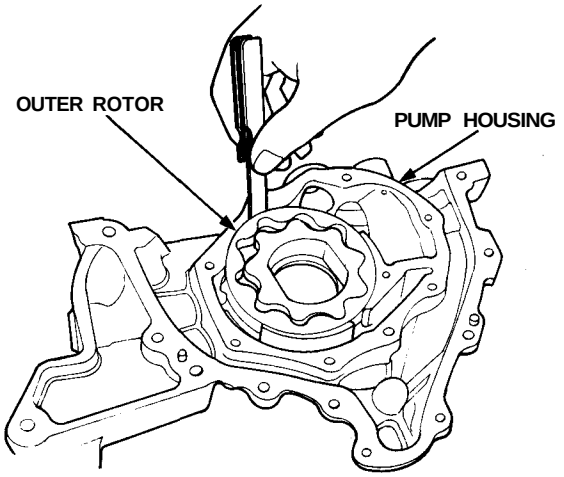

15. Inspect both rotors and the pump housing for scoring or other damage. Replace the oil pump assembly if necessary.

16. Remove the old oil seal from the oil pump.

17. Gently tap in the new oil seal until the special tool bottoms on the pump.

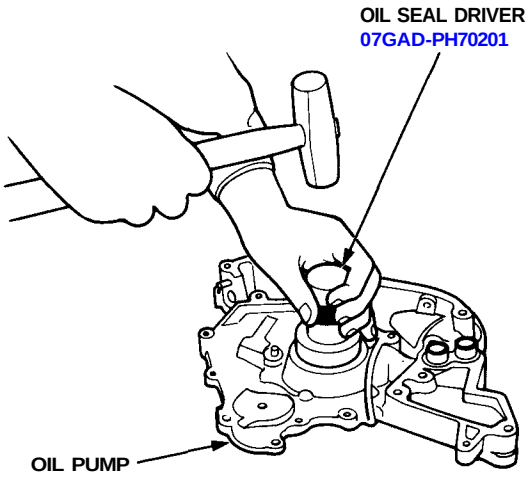

18. Reassemble the oil pump. Apply liquid thread-lock to the pump housing screws.

19. Check that the oil pump turns freely.

20. Apply a light coat of oil to the seal lip.

21. Install the two dowel pins and new O-ring on the cylinder block.

22. Apply liquid gasket to the cylinder block mating surface of the oil pump.

NOTE:
- Use liquid gasket, Part No. 08718-0001 or 08718 -0003.
- Check that the mating surfaces are clean and dry before applying liquid gasket.
- Apply liquid gasket evenly, in a narrow bead centered on the mating surface.
- To prevent leakage of oil, apply liquid gasket to the inner threads of the bolt holes.

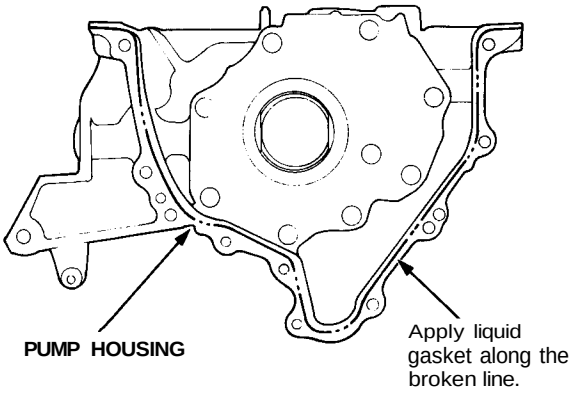

- Do not install the parts if five minutes or more have elapsed since applying liquid gasket. Instead reapply liquid gasket after removing old residue.
- After assembly, wait at least 20 minutes before filling the engine with oil.

(cont'd)

Oil Pump

Removal/Inspection/Installation (cont'd)

23. Install the oil pump on the cylinder block.

24. Install the oil pass pipe and joint.

25. Install the baffle plate.

26. Install the oil screen.

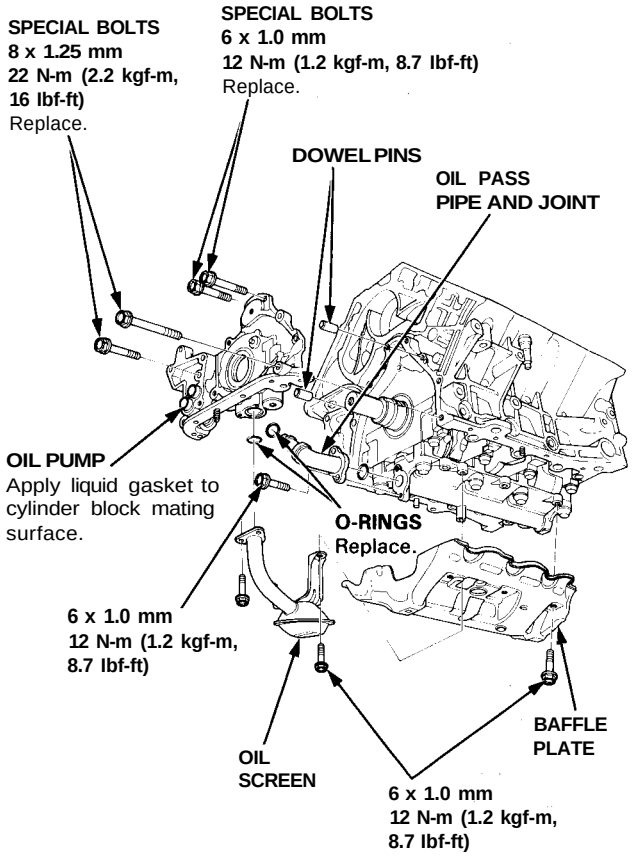

27. Apply liquid gasket to the oil pump and left side cover mating areas as shown below.

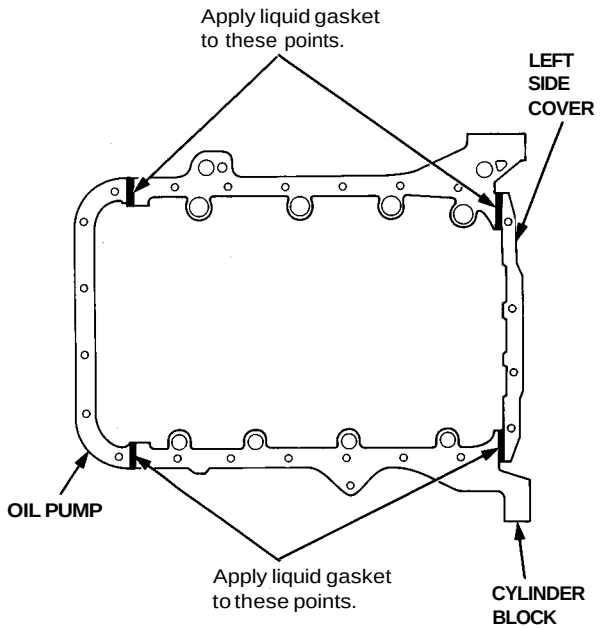

28. Install the oil pan gasket and oil pan.

NOTE: Use a new oil pan gasket.

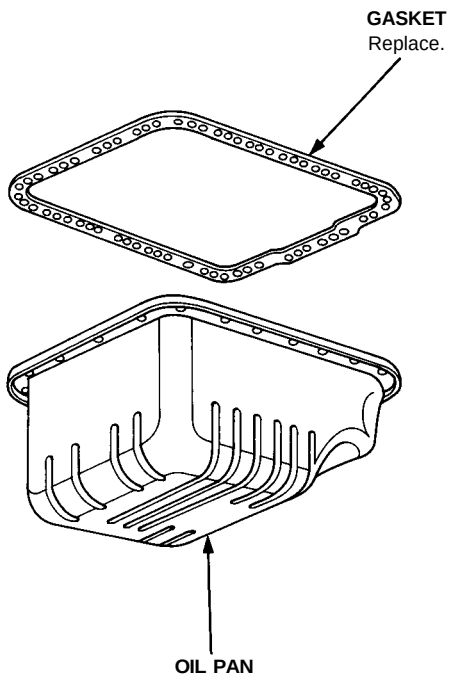

29. Tighten bolts and nuts finger tight at six points as shown below.

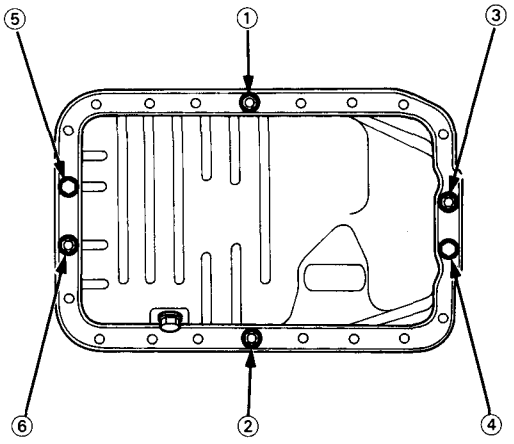

30. Starting with nut ① torque all bolts and nuts, in a clockwise pattern in three steps.

NOTE: Excessive tightening can cause distortion of oil pan gasket and oil leakage.

Torque: 14 N-m (1.4 kgf-m, 10 lbf-ft)

Oil Cooler, Oil Filter Base

Illustrated Index

NOTE:
- Use new O-rings when reassembling.
- Apply oil to O-rings before installation.
- Use liquid gasket, Part No. 08718-0001 or 08718-0003.

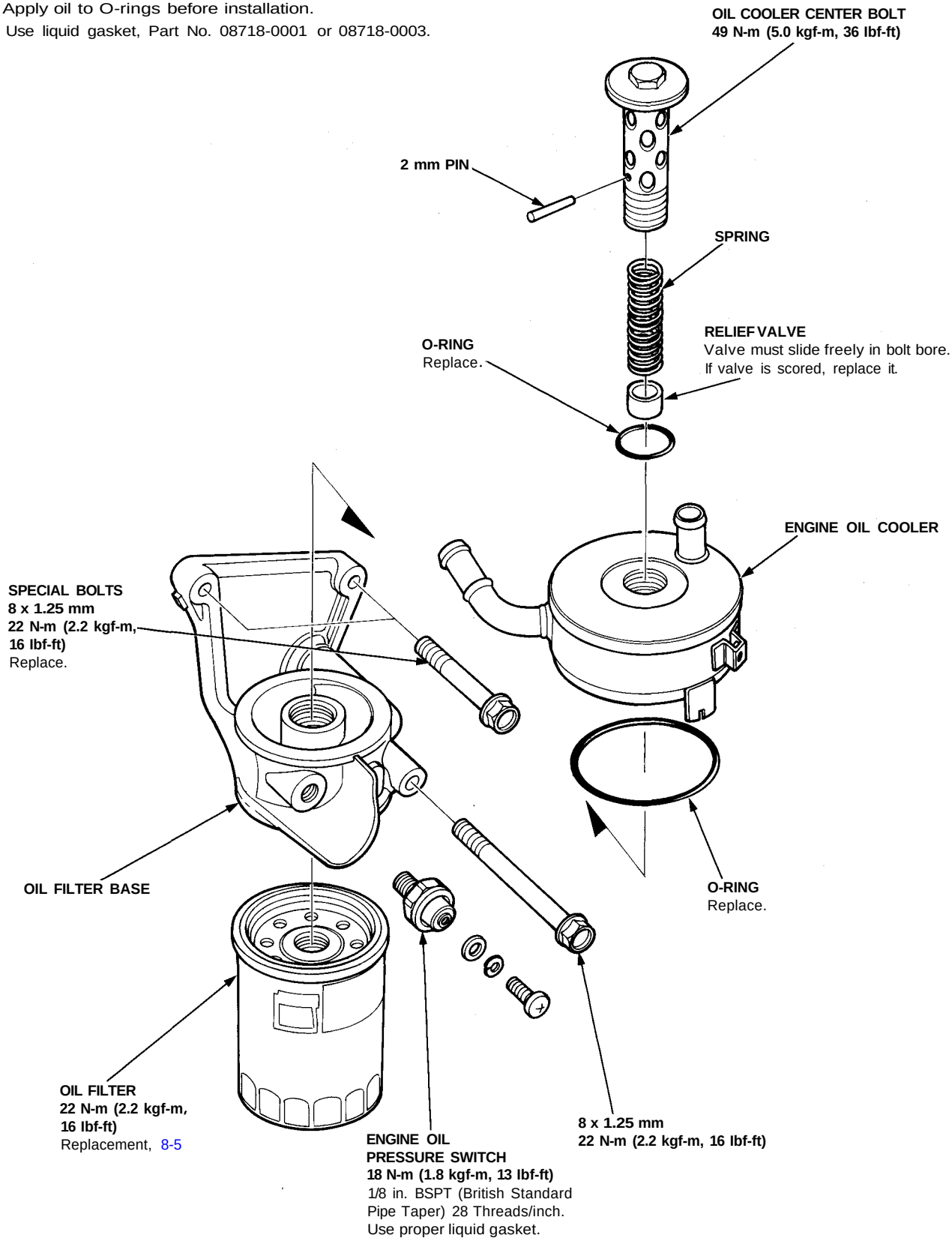

Intake Manifold/Exhaust System

Special Tools **9–2**
Intake Manifold
Replacement **9–3**
Exhaust Manifold
Replacement **9–4**
Exhaust Pipe and Muffler
Replacement **9–6**

Special Tools

Ref. No.	Tool Number	Description	Qty	Page Reference
①	07LAA – PT50101	O_2 Sensor Socket Wrench	1	9-4, 9-5, 9-6, 9-7

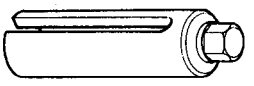

①

Intake Manifold

Replacement

NOTE: Use new O-rings and gaskets when reassembling.

CAUTION:

- **Check for folds or scratches on the surface of the gasket.**
- **Replace with a new gasket if damaged.**

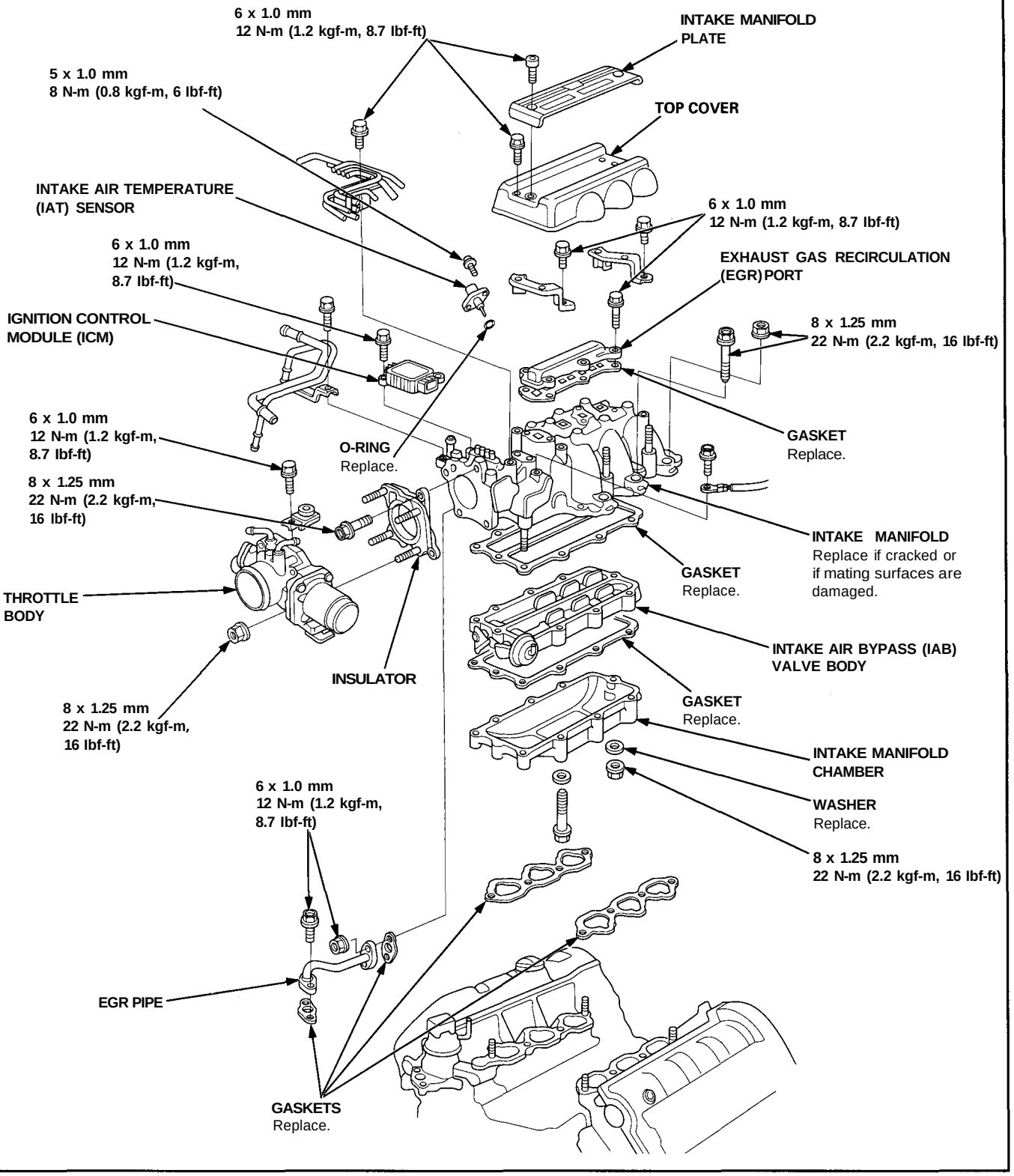

Exhaust Manifold

Replacement

NOTE: Use new gaskets and self-locking nuts.

M/T:

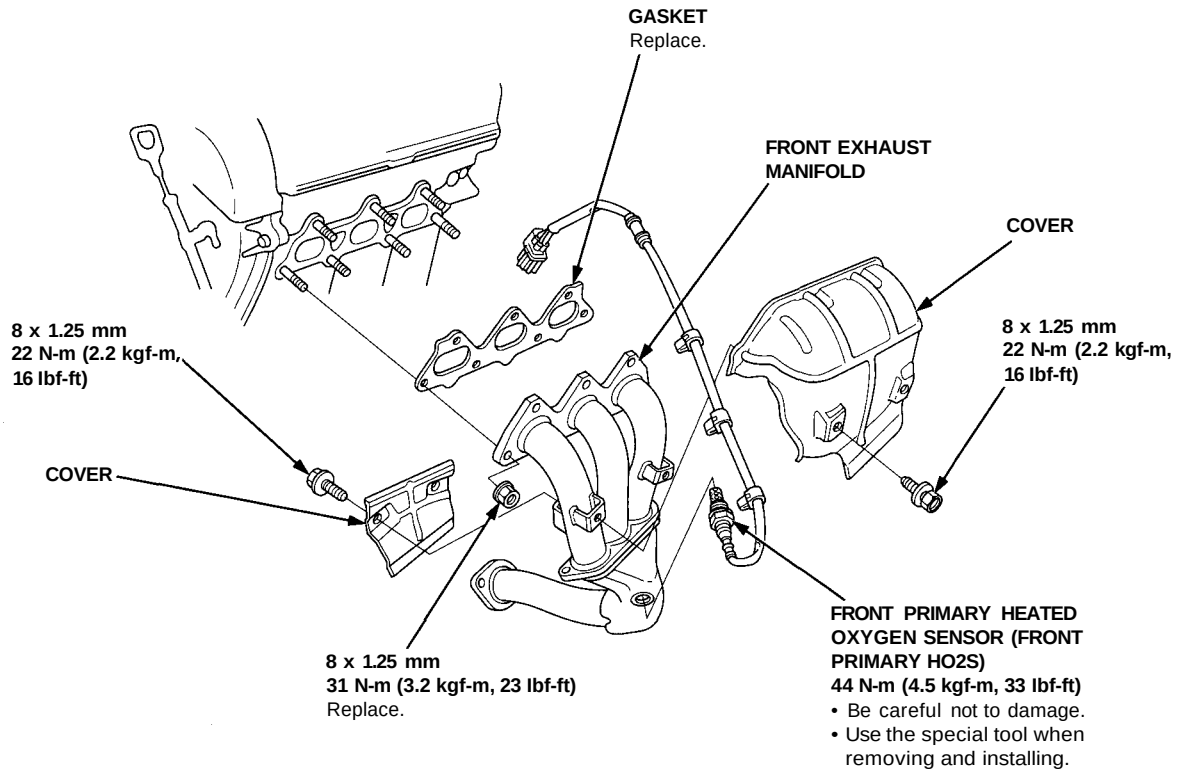

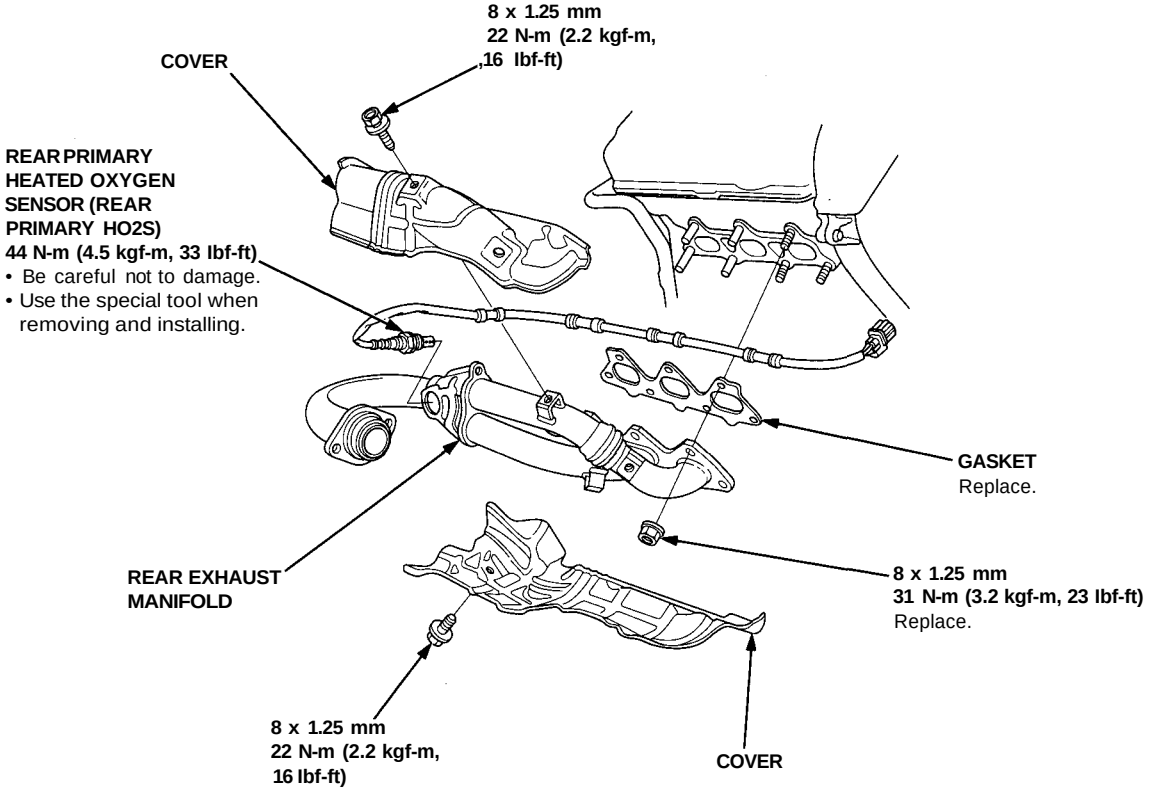

A/T:

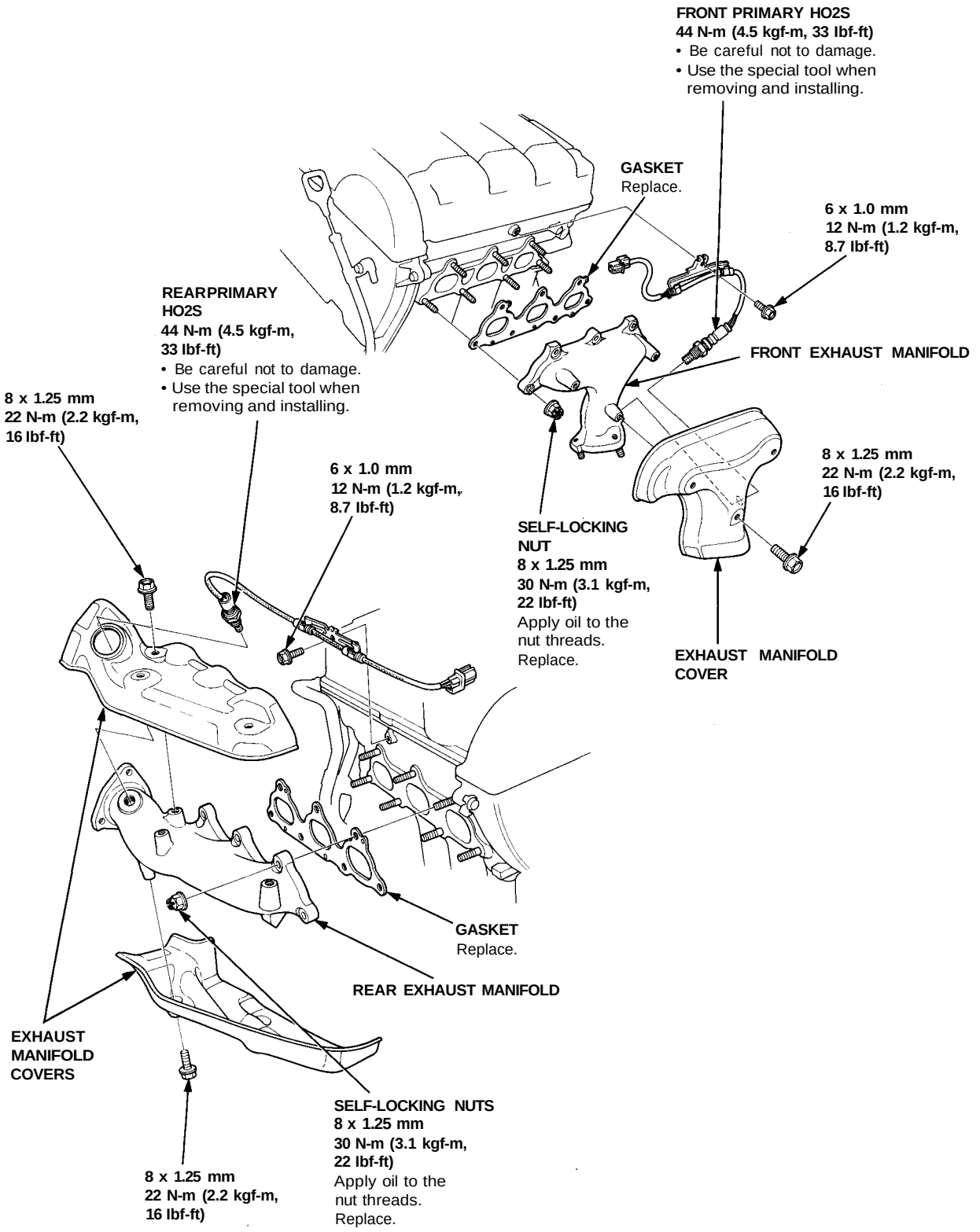
FRONT PRIMARY HO2S
44 N-m (4.5 kgf-m, 33 lbf-ft)
• Be careful not to damage.
• Use the special tool when removing and installing.
GASKET
Replace.
6 x 1.0 mm
12 N-m (1.2 kgf-m, 8.7 lbf-ft)
REAR PRIMARY HO2S
44 N-m (4.5 kgf-m, 33 lbf-ft)
• Be careful not to damage.
• Use the special tool when removing and installing.
FRONT EXHAUST MANIFOLD
8 x 1.25 mm
22 N-m (2.2 kgf-m, 16 lbf-ft)
6 x 1.0 mm
12 N-m (1.2 kgf-m, 8.7 lbf-ft)
SELF-LOCKING NUT
8 x 1.25 mm
30 N-m (3.1 kgf-m, 22 lbf-ft)
Apply oil to the nut threads.
Replace.
8 x 1.25 mm
22 N-m (2.2 kgf-m, 16 lbf-ft)
EXHAUST MANIFOLD COVER
GASKET
Replace.
REAR EXHAUST MANIFOLD
EXHAUST MANIFOLD COVERS
SELF-LOCKING NUTS
8 x 1.25 mm
30 N-m (3.1 kgf-m, 22 lbf-ft)
Apply oil to the nut threads.
Replace.
8 x 1.25 mm
22 N-m (2.2 kgf-m, 16 lbf-ft)

Exhaust Pipe and Muffler

Replacement

NOTE: Use new gaskets and self-locking nuts when reassembling.

M/T:

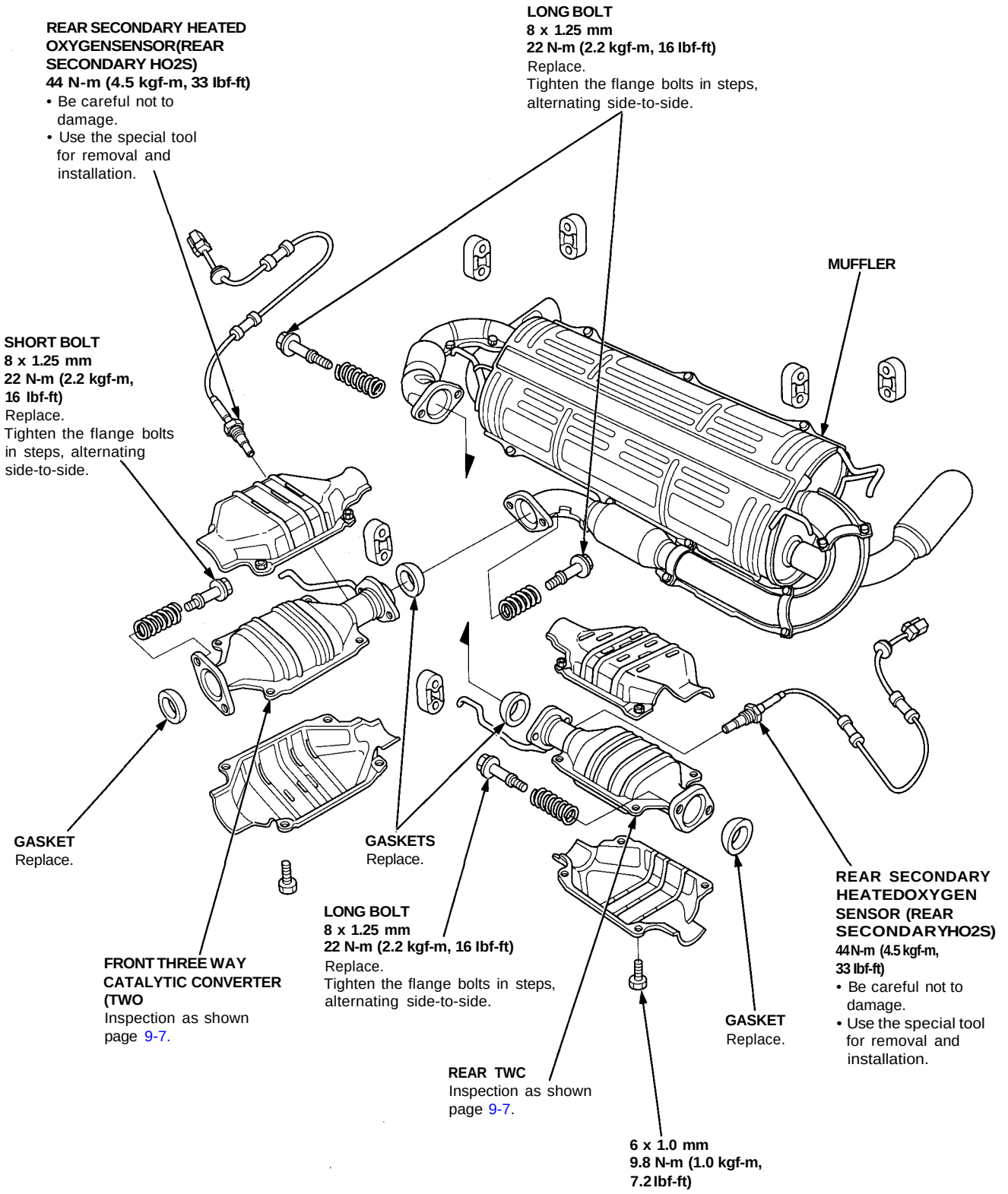

A/T:

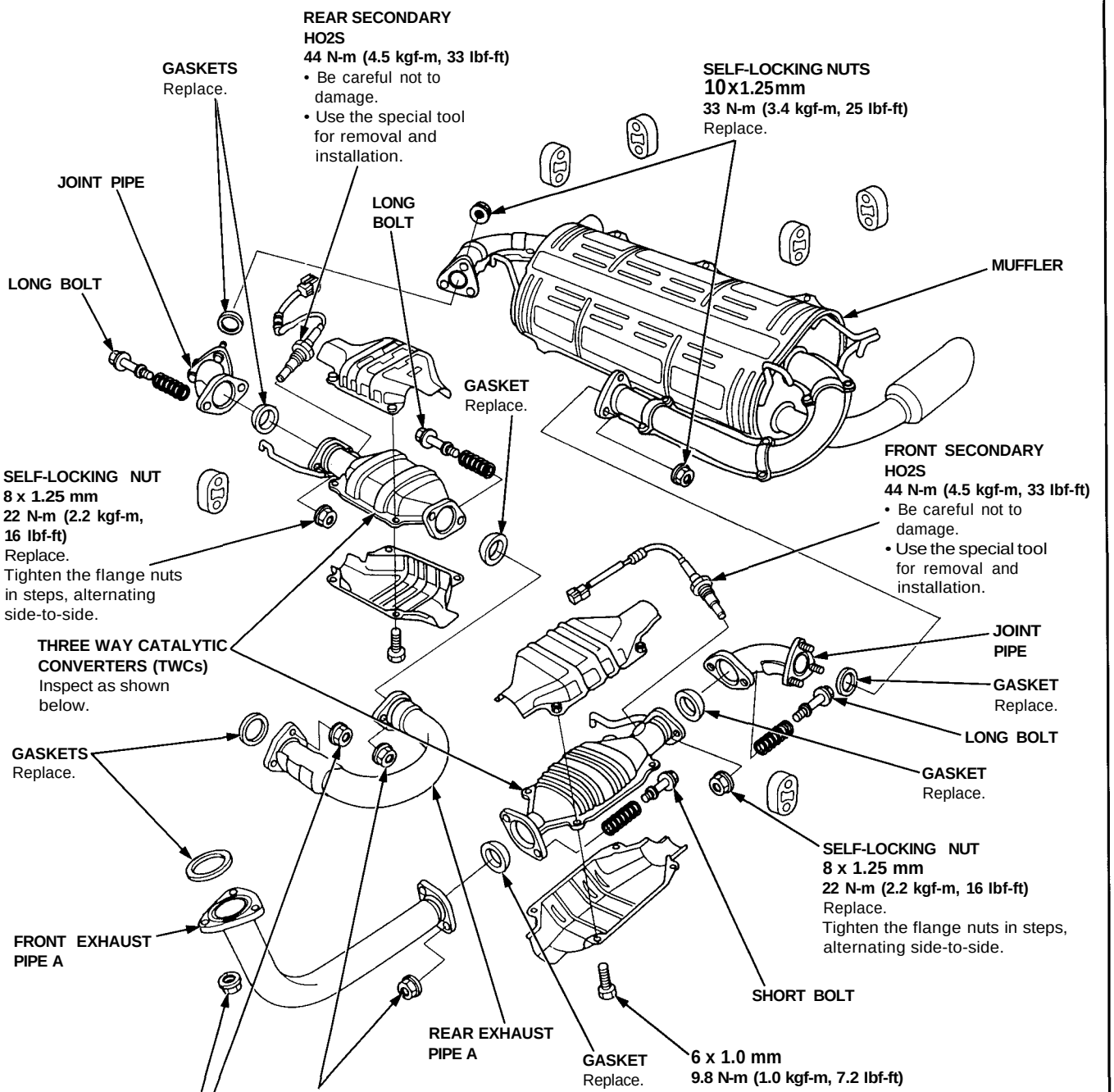

TWC Inspection:

Using a flashlight, make a visual check for plugging, melting or cracking of the catalyst.

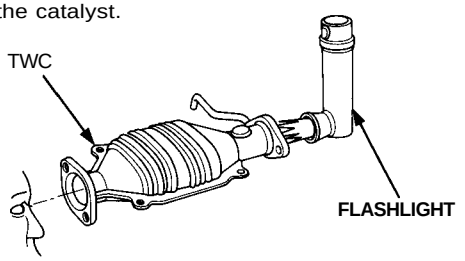

Cooling

Component Location Index 10–2
Radiator
  Replacement 10–4
  Coolant Refilling and Bleeding
    ’97–00 Models 10–5
    ’01–05 Models 10–2
Expansion Tank
  Cap Testing 10–8
  Pressure Testing 10–8
Thermostat
  Replacement 10–9
  Testing 10–9
Water Pump
  Component Location Index 10–10
  Inspection 10–11
  Replacement 10–11

Cooling

Illustrated Index

⚠ WARNING System is under high pressure when the engine is hot. To avoid danger of releasing scalding engine coolant, remove the cap only when the engine is cool.

Total Cooling System Capacity: Including expansion tank 2.1 ℓ (2.2 US qt, 1.8 Imp qt)
M/T: 16.0 ℓ (17.0 US qt, 14.1 Imp qt)
A/T: 16.5 ℓ (17.4 US qt, 14.5 Imp qt)

NOTE:
- Check all cooling system hoses for damage, leaks or deterioration and replace if necessary.
- Check all hose clamps and retighten if necessary.
- Use new O-rings when reassembling.

Radiator, Water Pipes and Hoses:

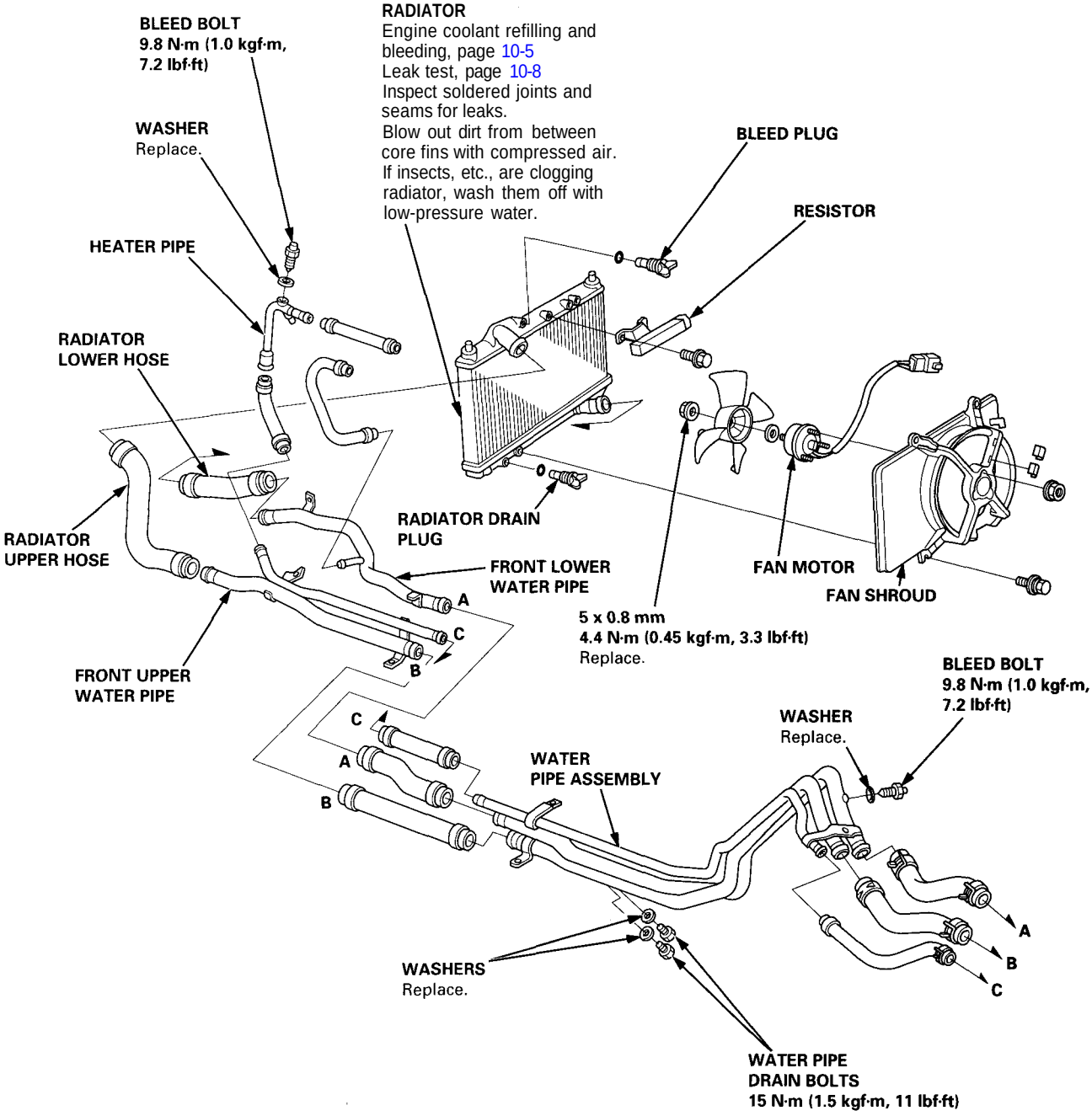

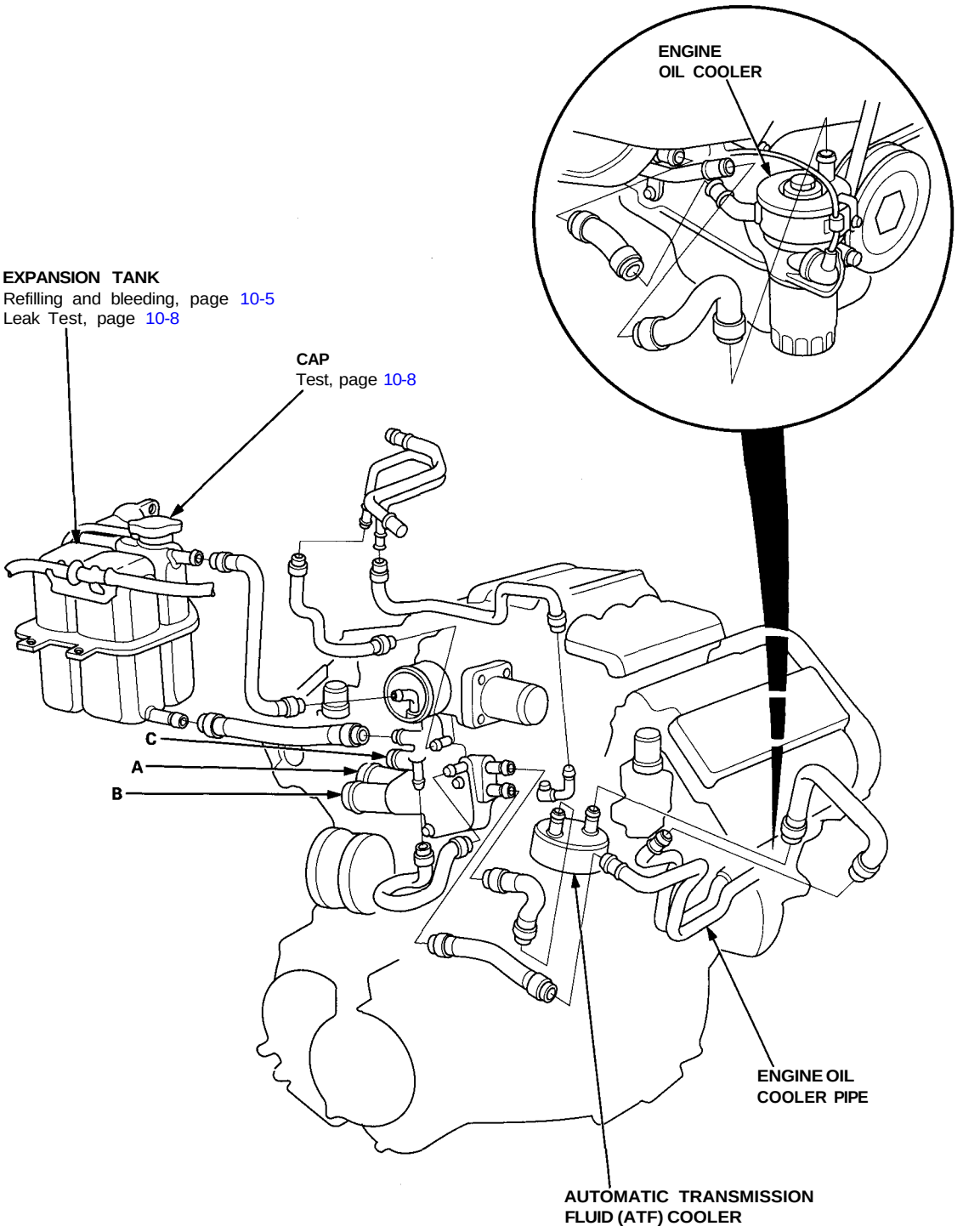
ENGINE
OIL COOLER
EXPANSION TANK
Refilling and bleeding, page 10-5
Leak Test, page 10-8
CAP
Test, page 10-8
C
A
B
ENGINE OIL
COOLER PIPE
AUTOMATIC TRANSMISSION
FLUID (ATF) COOLER

Radiator

Replacement

1. Remove the spare tire.
2. Drain the radiator (see page 10-5 thru 10-7).
3. Disconnect the fan motor connector and the resistor connector.
4. Remove the upper and lower hoses from the radiator.
5. Remove the bracket and the radiator.

Install the radiator in the reverse order of removal:

NOTE:
- Set the upper and lower cushions securely.
- Fill the radiator and bleed the air (see page 10-5 thru 10-7).

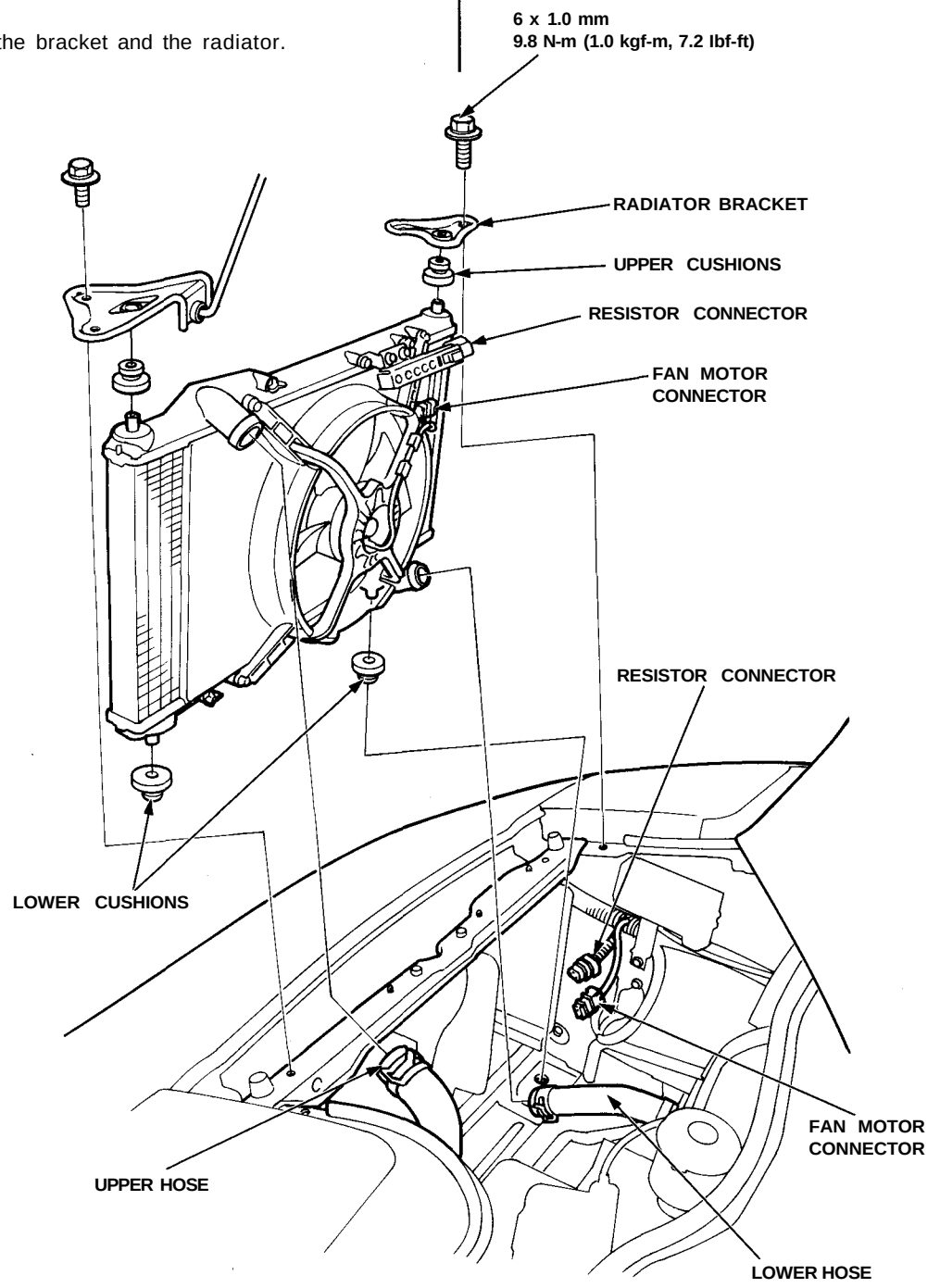

Engine Coolant Refilling and Bleeding

CAUTION: When pouring engine coolant, be sure to shut the relay box lid and not let coolant spill on the electrical parts or the paint. If any coolant spills, rinse it off immediately.

NOTE:
- Perform this maintenance when the engine is cool.
- Before replacing the coolant, turn the ignition ON, slowly turn the climate control temperature knob to 90° and turn off the ignition. This will allow the coolant in the heater to drain out with the rest of the system.

1. Open the hood, the rear window and the engine cover.
2. Remove the cover protecting the water pipes and shift cables on the underside of the car.
3. Before removing the expansion tank cap, first loosen the cap to lower pressure.

   CAUTION: Do not remove the expansion tank cap when engine is hot. The coolant is under pressure and may blow out and scald you. Open the cap slowly when the engine is cool.
4. Loosen the drain plug in the bottom of the radiator, and drain the coolant.
5. Remove the two drain bolts from the water pipes, and drain the coolant.

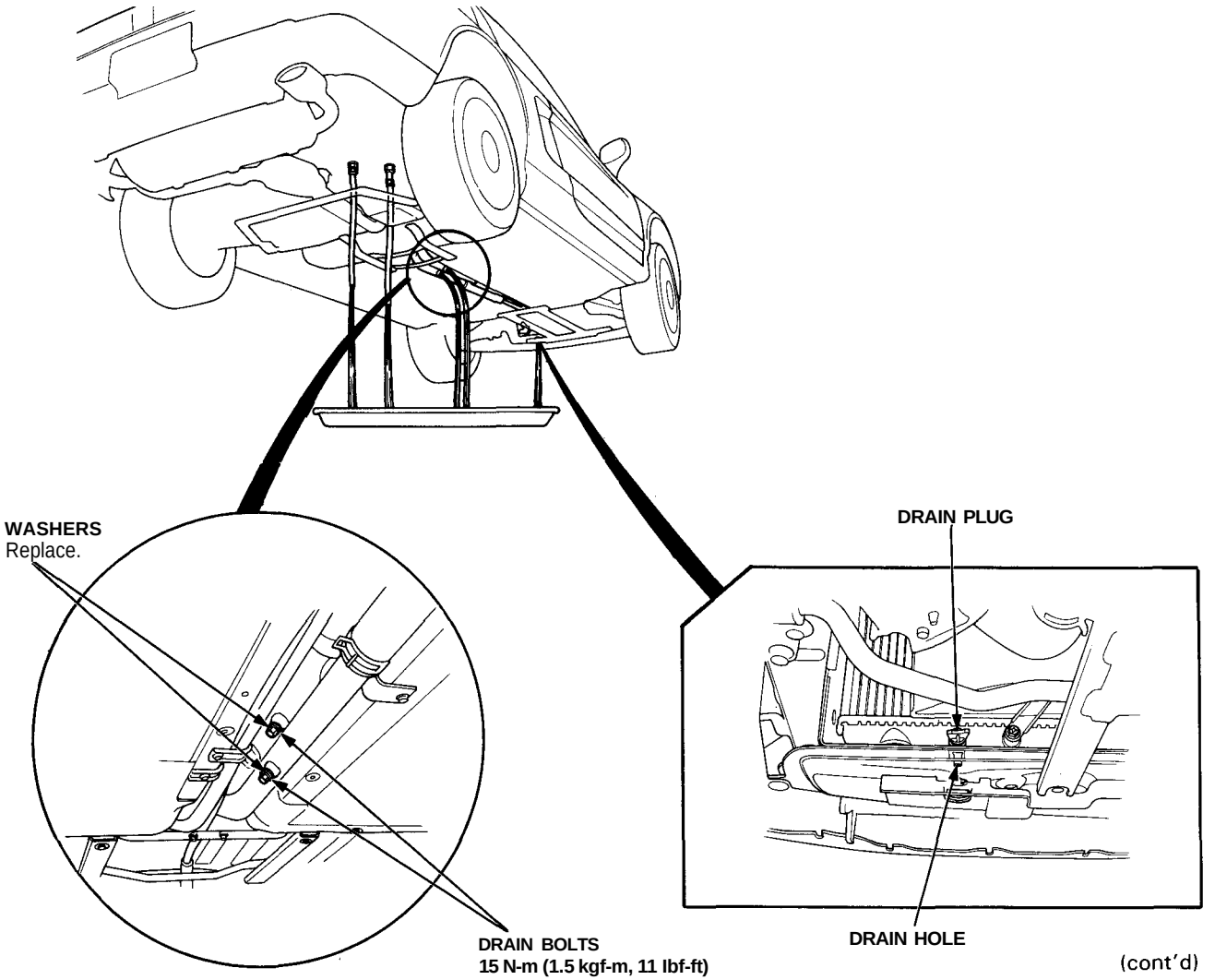

(cont'd)

Engine Coolant Refilling and Bleeding (cont'd)

6. Install rubber hoses on the drain bolts at the front and rear of the engine under the cylinder banks. Loosen the drain bolts to drain the coolant.
   - Draining can be done more quickly if all the bleed bolts and plug are also opened. Before opening them, make sure the coolant level in the expansion tank has come down completely so that the coolant will not pour out of the bleed bolts and plug.

7. When the coolant stops draining, tighten the radiator drain plug, water pipe drain bolts and engine drain bolts.
   - Be sure to replace the water pipe drain bolt washers with new ones.

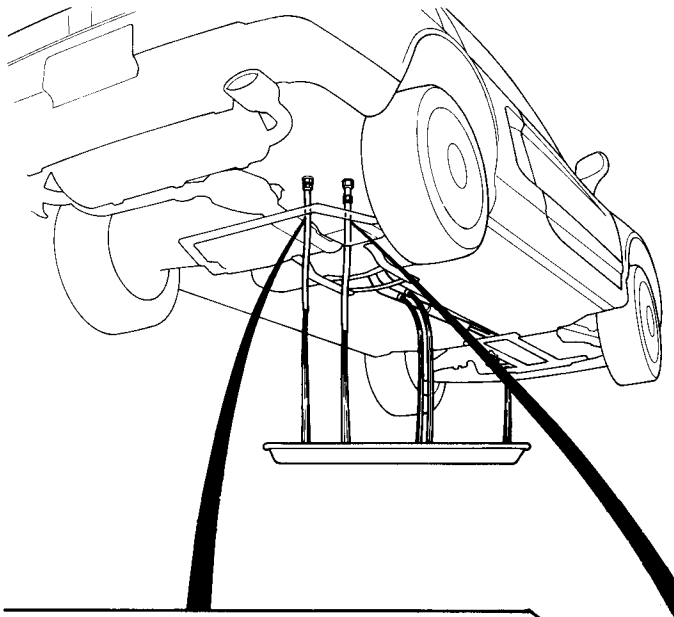

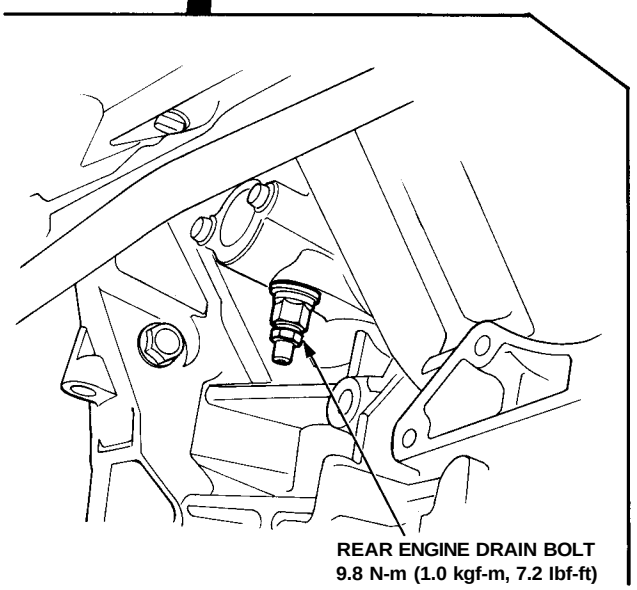

REAR ENGINE DRAIN BOLT
9.8 N-m (1.0 kgf-m, 7.2 lbf-ft)

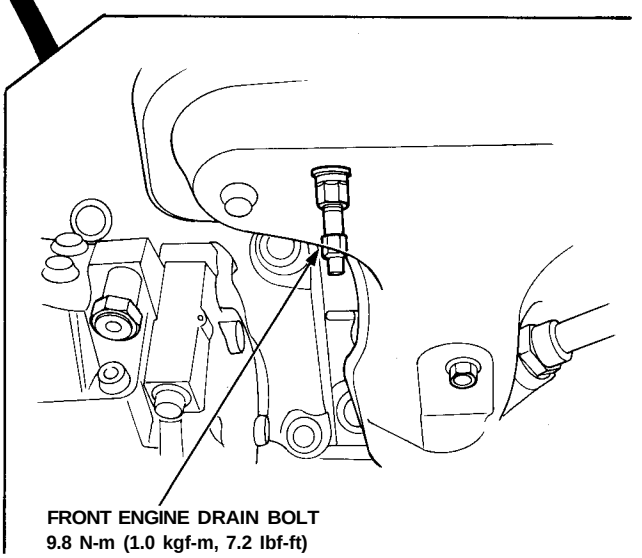

FRONT ENGINE DRAIN BOLT
9.8 N-m (1.0 kgf-m, 7.2 lbf-ft)

8. Open all four bleeders.
   1) Loosen the radiator bleed plug.
   2) Remove the heater pipe bleed bolt.
   3) Loosen the water pipe bleed bolt.
   4) Loosen the engine bleed bolt on the thermo cover.

9. Mix the recommended antifreeze/coolant with an equal amount of water in a clean container.

   NOTE:
   - Always use Genuine Honda Antifreeze/Coolant. Using a non-Honda coolant can result in corrosion, causing the cooling system to malfunction or fail.
   - For best corrosion protection, the coolant concentrations must be maintained year-round at 50% minimum. Coolant concentrations less than 50% may not provide sufficient protection against corrosion or freezing.
   - Coolant concentrations greater than 60% will impair cooling efficiency and are not recommended.

   CAUTION:
   - **Do not mix different brands of antifreeze/coolant.**
   - **Do not use additional rust inhibitors or anti-rust products; they may not be compatible with the recommended coolant.**

   Engine Coolant Refill Capacity: Including expansion tank2.1 ℓ (2.2 US qt, 1.8 Imp qt)

   Manual: 12.0 ℓ (12.7 US qt, 10.6 Imp qt)
   Automatic: 12.0 ℓ (12.7 US qt, 10.6 Imp qt)

10. Fill the expansion tank with engine coolant. As coolant starts to run out in a steady stream without bubbles, tighten the bleeders in sequence: thermo cover bleed bolt, radiator bleed plug, heater pipe bleed and water pipe bleed bolt.

11. After tightening all the bleeding bolts and plug, fill the expansion tank with coolant up to the MAX line.

12. Loosen the thermo cover bleed bolt to remove any remaining air.

13. When bleeding is completed, retighten the thermo cover bleed bolt and fill the expansion tank up to 0.5 ℓ (0.53 US qt, 0.44 Imp qt) or 30 mm (1.2 in) over the MAX line.

14. Install the expansion tank cap, and turn it 60 degrees (where it engages the first lock tab of filler neck).

1 5. Start the engine, and let it run until warmed up (until the thermostat opens and the radiator cooling fan runs).

16. Turn off the engine. Check the expansion tank and, if needed, add engine coolant to bring it up to the MAX line.

17. Tighten the expansion tank cap securely.

18. Reinstall the cover on the car's underside.

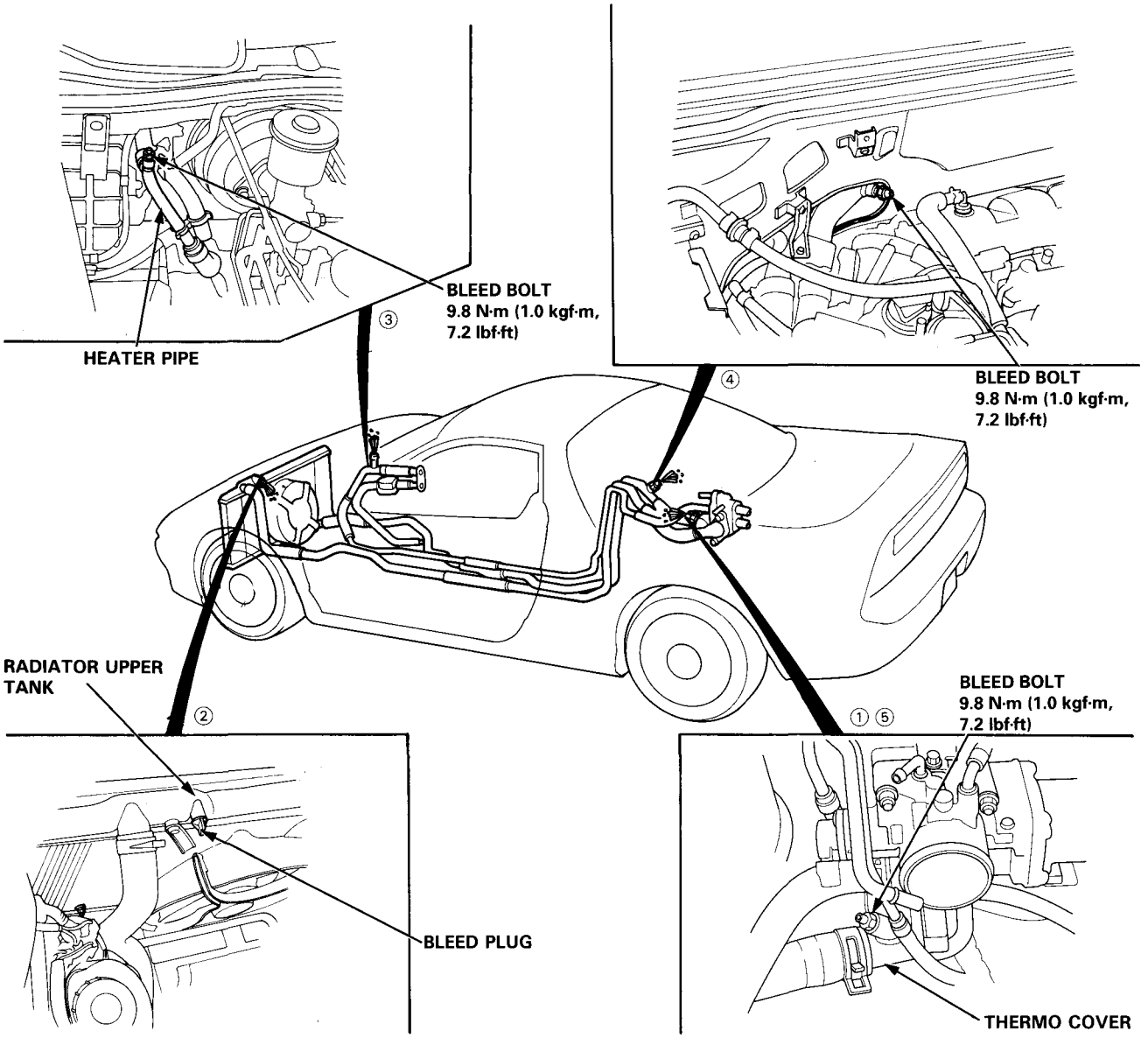

Expansion Tank

Cap Testing

1. Remove the expansion tank cap, wet its seal with engine coolant, then install it on the pressure tester.
2. Apply a pressure of 93-123 kPa (0.95 - 1.25 kgf/cm^2, 14-18 psi).
3. Check for a drop in pressure.
4. If the pressure drops, replace the cap.

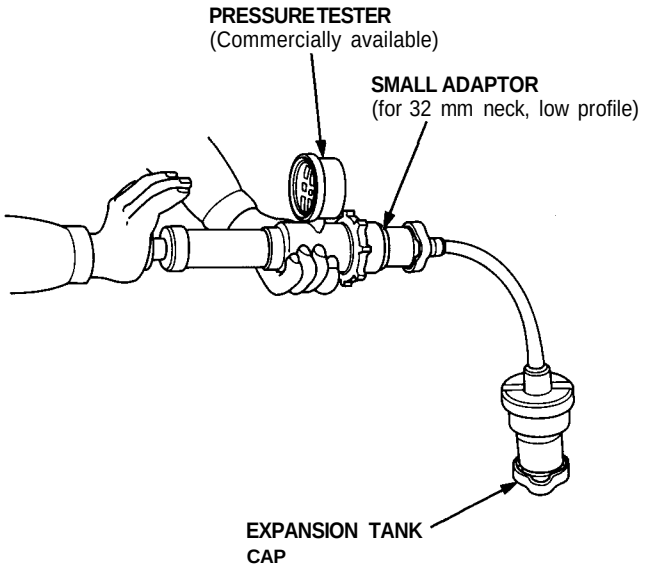

Testing

1. Wait until the engine is cool, then carefully remove the expansion tank cap and fill the expansion tank with engine coolant to the top of the filler neck.
2. Attach the pressure tester to the expansion tank, and apply a pressure of 93-123 kPa (0.95 - 1.25 kgf/cm^2, 14-18 psi).
3. Inspect for coolant leaks and a drop in pressure.
4. Remove the tester, and reinstall the expansion tank cap.

   NOTE: Check for engine oil in the coolant and/or coolant in the engine oil.

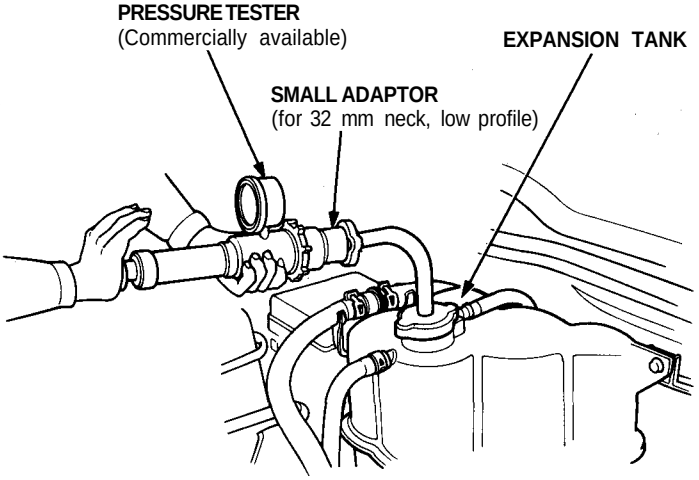

Thermostat

Replacement

NOTE: Use new gaskets and O-rings when reassembling.

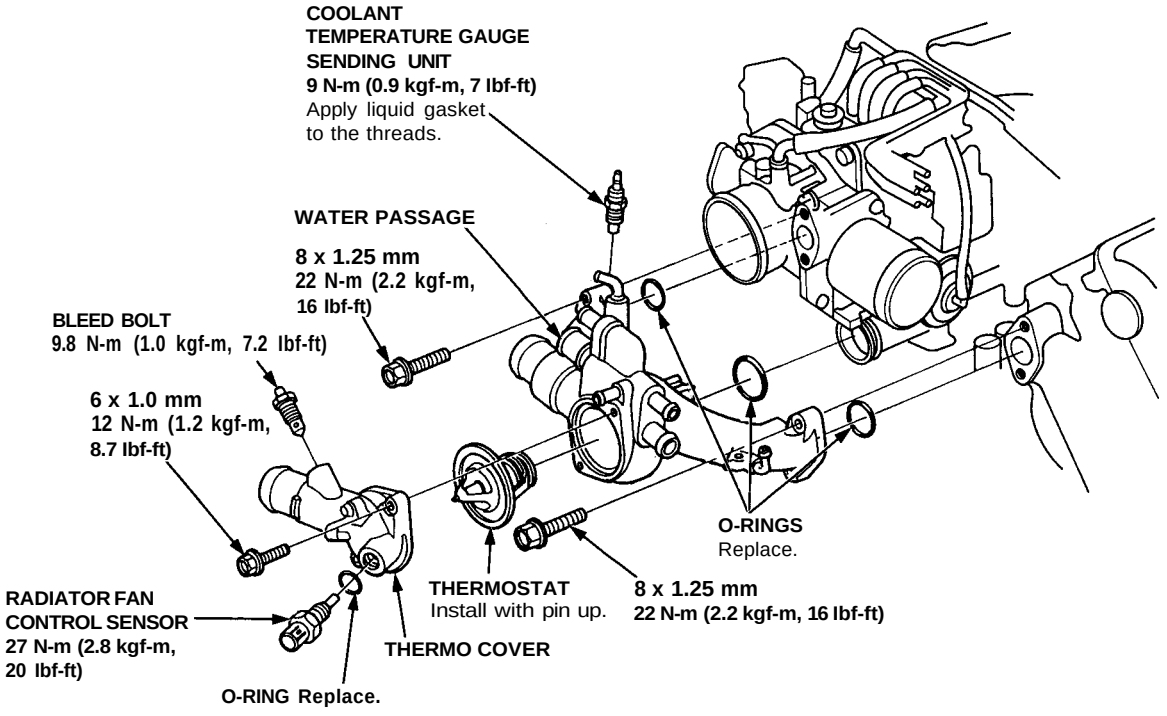

Testing

Replace thermostat if it is open at room temperature.

To test a closed thermostat:

1. Suspend the thermostat in a container of water as shown.
2. Heat the water, and check the temperature with a thermometer. Check the temperature at which the thermostat first opens and at full lift.

   CAUTION: Do not let thermometer touch the bottom of the hot container.

3. Measure lift height of the thermostat when fully open.

   STANDARD THERMOSTAT
   Lift height: above 10 mm (0.39 in)
   Starts opening: 169-176°F (76-80°C)
   Fully open: 194°F (90°C)

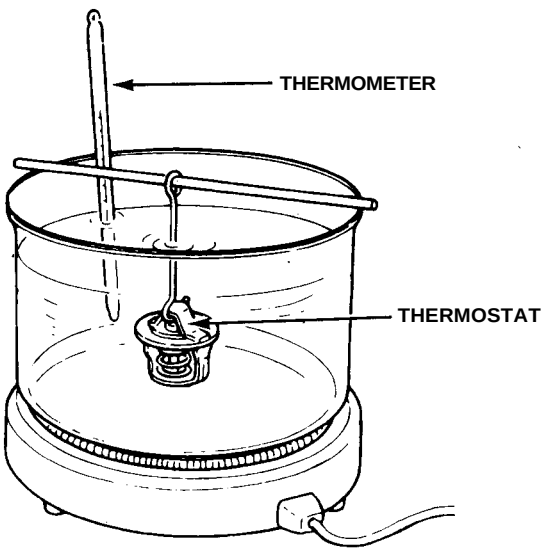

Water Pump

Illustrated Index

NOTE: Use new O-rings and new special bolts when reassembling.

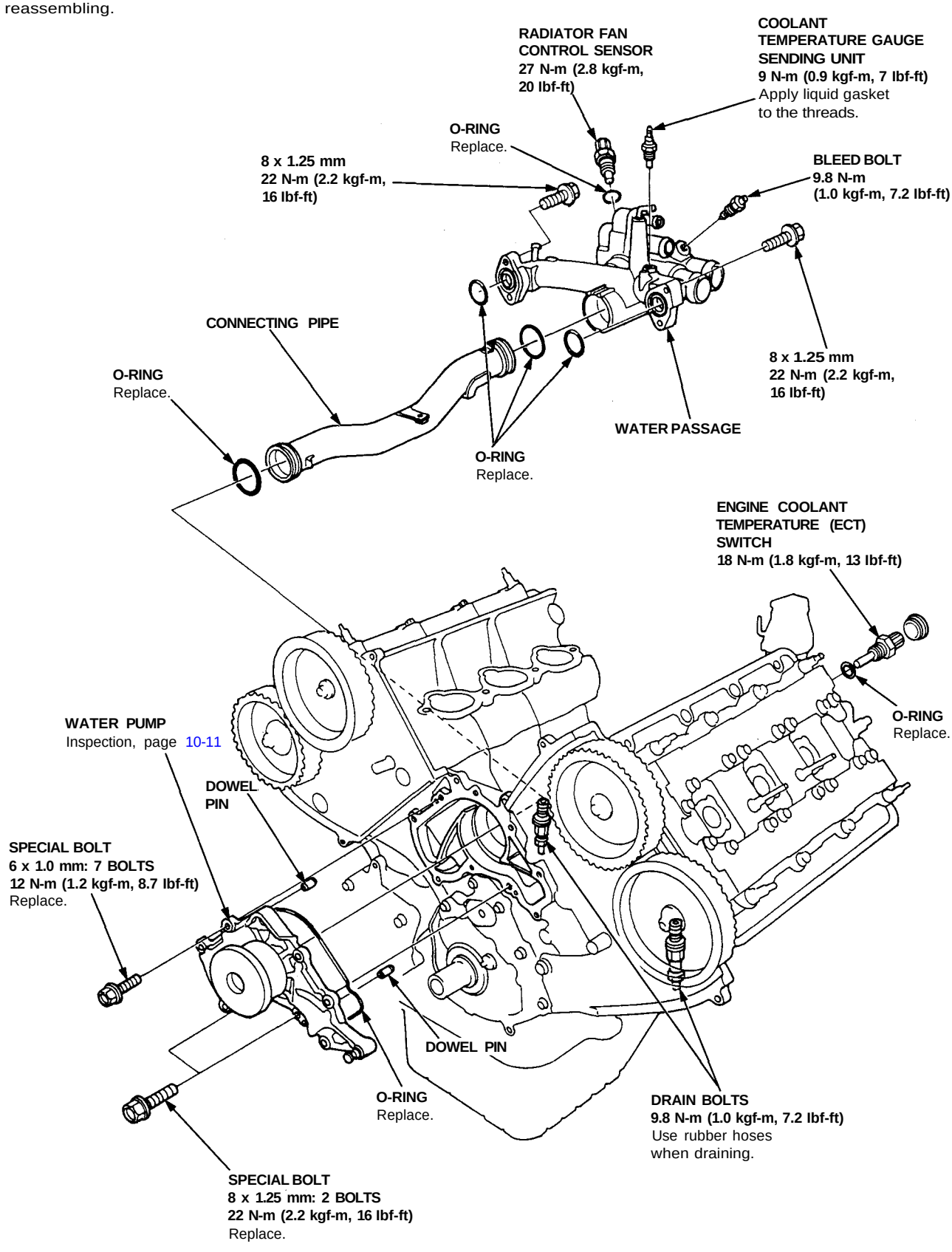

Inspection

1. Remove the timing belt (see page 6-15).
2. Turn the water pump pulley counterclockwise. Check that it turns freely.
3. Check for signs of seal leakage.

   NOTE: A small amount of "weeping" from the bleed hole is normal.

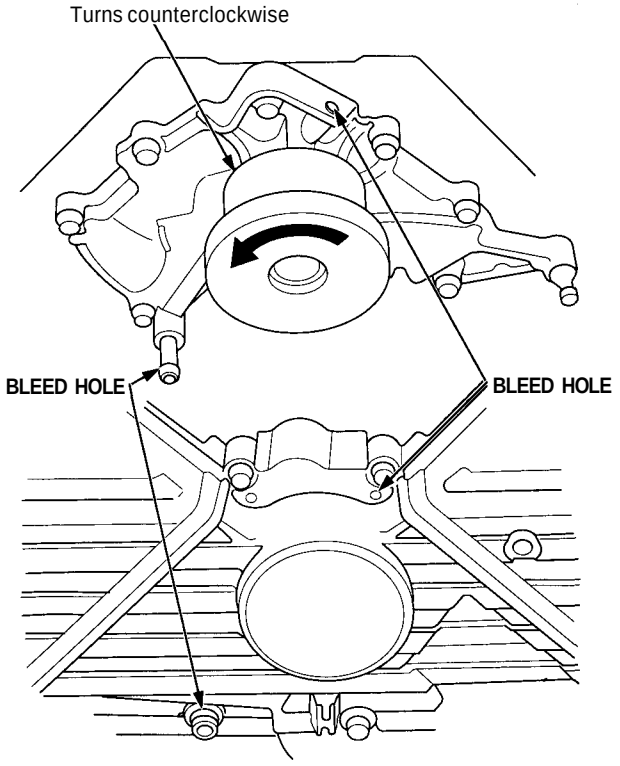

Replacement

1. Remove the timing belt (see page 6-15).
2. Unscrew the bolts, then remove the water pump.

   NOTE: Inspect and clean the O-ring groove and mating surface with the cylinder block.

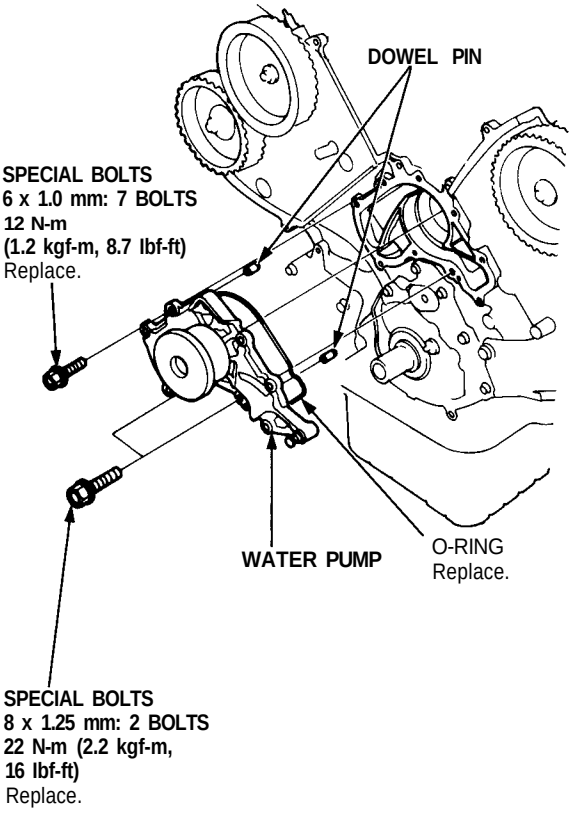

3. Install the water pump in the reverse order of removal.

   NOTE:
   - Keep the O-ring in position when installing.
   - Clean up spilled engine coolant.

Fuel and Emissions

Special Tools 11–2
Component Location Index
'97–99 Models 11–3
'00–01 Models 11–3c
'02–03 Models 11–2e
'04–05 Models 11–3
System Description
Vacuum Connections
'97–99 Models 11–7
'00–05 Models 11–6c
Electrical Connections
'97–99 Models 11–10
'00–01 Models 11–9c
'02–05 Models 11–3e
System Connectors
Engine Compartment, Right Side
'97–99 Models 11–24
'00–01 Models 11–24c
'02–05 Models 11–18e
Engine Compartment, Left Side
'97–99 Models 11–26
'00–01 Models 11–26c
'02–05 Models 11–20e
Behind the Bulkhead Panels
'97–99 Models 11–28
'00–01 Models 11–28c
'02–05 Models 11–22e
Front Compartment and Under-dash
'97–99 Models 11–34
'00–01 Models 11–34c
'02–05 Models 11–28e
Troubleshooting
Troubleshooting Procedures
'97–99 Models 11–38
'00–05 Models 11–38c
ECM Replacement 11–8g
Symptom Chart
'97–99 Models 11–42
'00–05 Models 11–40c
Probable Cause List
'97–99 Models 11–43
'00–05 Models 11–41c
Engine Control Module Terminal Arrangement
'97–99 Models 11–46
'00–05 Models 11–42c
DTC Chart 11–52
How to Read Flowcharts ... 11–58

PGM–FI System

System Description 11–59
Troubleshooting Flowcharts
MIL Never Comes On 11–61
MIL Stays On 11–62

Drive By Wire System

System Description 11–107

Idle Control System

Troubleshooting Flowcharts
Air Conditioning Signal 11–118
Alternator (ALT) FR Signal 11–120
A/T Gear Position Signal ... 11–122
Neutral Switch Signal (M/T) 11–124
Clutch Switch Signal (M/T) 11–125
Brake Switch Signal 11–125
Starter Switch Signal 11–128
Idle Speed Setting 11–129

Fuel Supply System

Fuel Lines
'97–99 Models 11–130
'00–05 Models 11–57c
System Description 11–132
Fuel Pressure 11–132
Fuel Injectors
'97–03 Models 11–134
'04–05 Models 11–40g
Fuel Injector Resistor (A/T) 11–136
Fuel Pressure Regulator 11–137
Fuel Filter 11–138
Fuel Pump 11–142
PGM–FI Main Relay 11–143
Troubleshooting 11–144
Fuel Tank 11–147

Intake Air System

System Description 11–148
Air Cleaner 11–149
Throttle Cable 11–150
Throttle Body 11–151
Fuel Injection Air (FIA) Control System Description 11–153
Intake Air Bypass (IAB) Control System Description 11–154
Troubleshooting 11–155
Intake Air Bypass (IAB) Control Valve Testing 11–157

Emission Control System

System Description
'97–99 Models 11–158
'00–05 Models 11–58c
Tailpipe Emission 11–158
Three Way Catalytic Converter (TWC) System 11–159
Exhaust Gas Recirculation (EGR) System 11–161
Positive Crankcase (PCV) System 11–166
Evaporative Emission Controls Description 11–167
EVAP Control Canister Removal/Installation 11–177
EVAP Two Way Valve Testing .. 11–178
Pulsed Secondary Air Injection System Description 11–73

Special Tools

Note: Refer to page 11-2c or 11-2g for further page references

Ref. No.	Tool Number	Description	Qty	Page Reference
①	A973X – 041 – XXXXX	Vacuum Pump/Gauge, 0 – 30 in.Hg	1	11-151,11-155, 11-163, 11-164, 11-172, 11-173, 11-175, 11-178, 11-139
②	07JAZ – 001000B	Vacuum/Pressure Gauge, 0 – 4 in.Hg	1	11-173
③	07PAZ – 0010100	SCS Service Connector	1	11-38, 11-60, 11-62, 11-64, 11-81,11-91,11-129,11-160, 11-162, 11-163, 11-38c
④	07SAZ – 001000A	Backprobe Set	2	11-40
⑤	07406 – 0040001	Fuel Pressure Gauge	1	11-133, 11-137

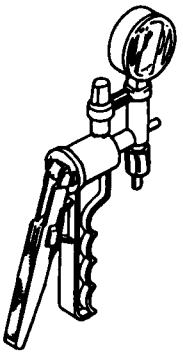

①

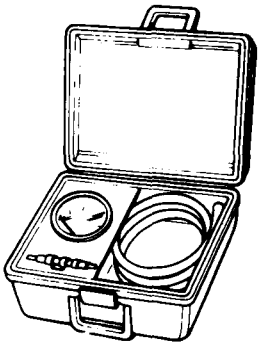

②

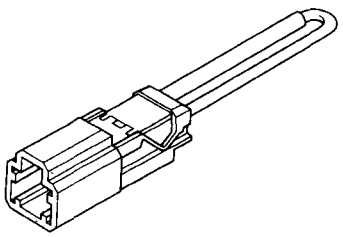

③

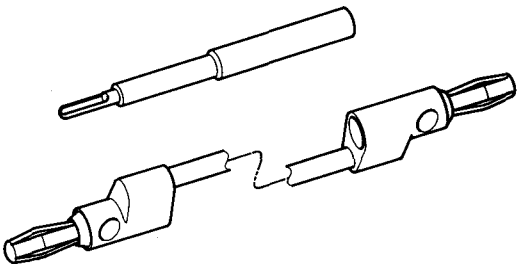

④

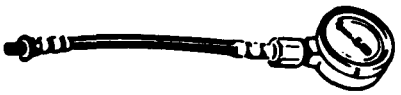

⑤

Component Locations

Index

For Troubleshooting of DTC related components, see chart on page 11-52.

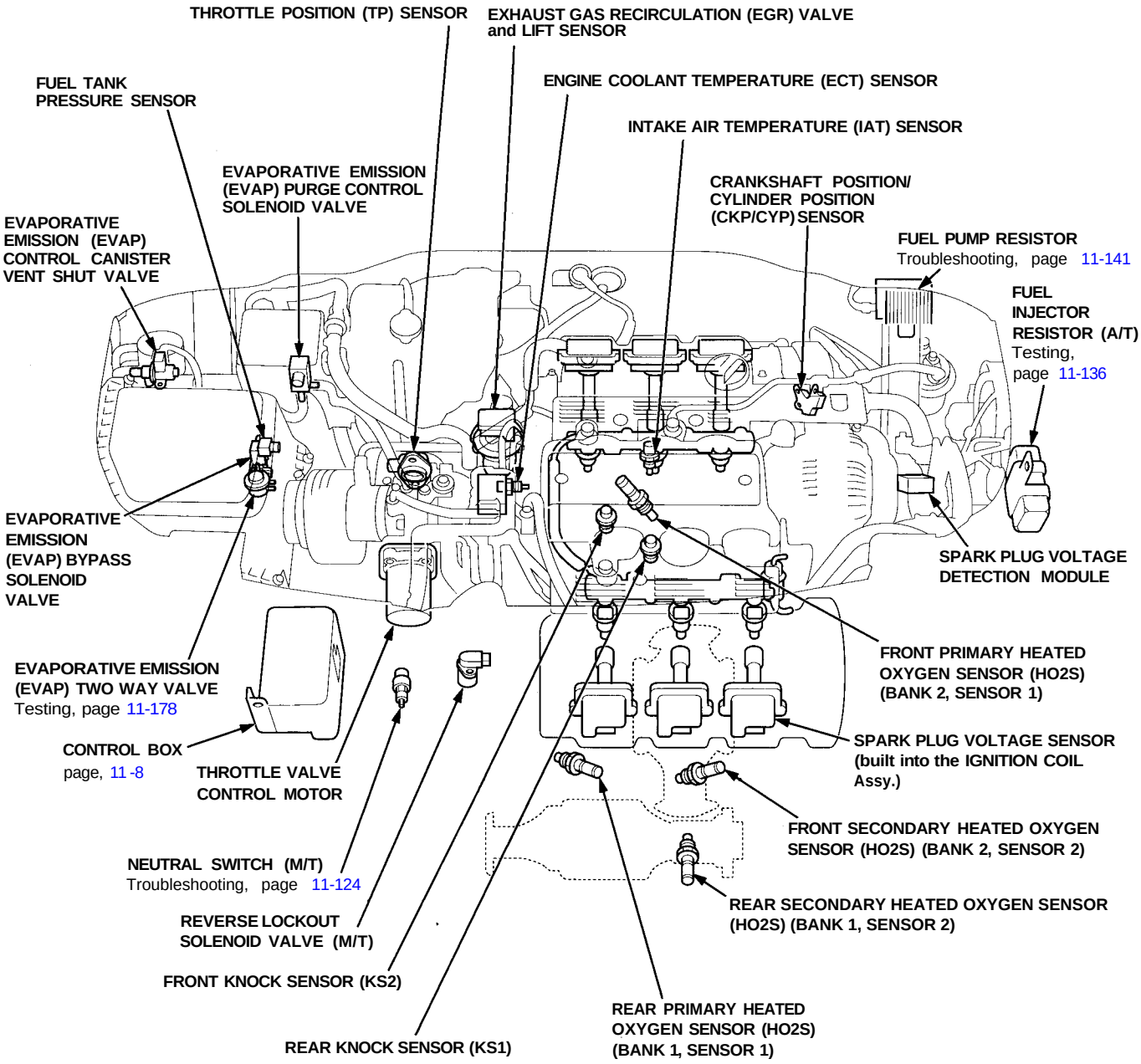

(cont'd)

Component Locations

Index (cont'd)

For Troubleshooting of DTC related components, see chart on page 11-52.

CLUTCH SWITCH (M/T only)
Troubleshooting, page 11-125

ACCELERATOR POSITION (AP) SENSOR

THROTTLE CABLE
Inspection/Adjustment, page 11-150
Installation, page 11-150

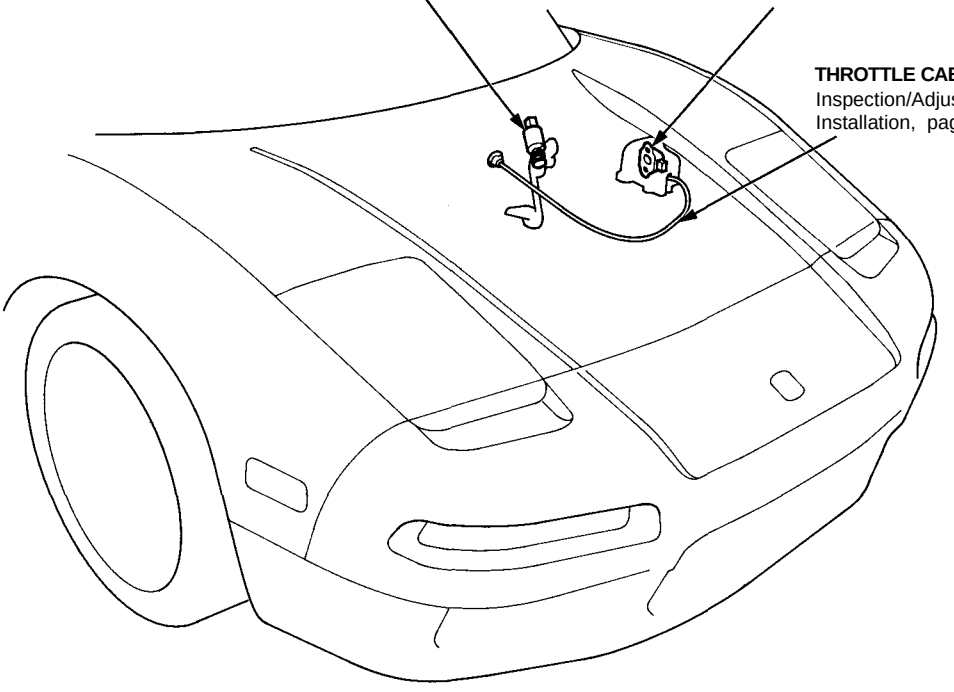

PGM-FI MAIN RELAY
Relay Testing, page 11-143
Troubleshooting, page 11-144

SERVICE CHECK CONNECTOR (2P)
Self-diagnostic Procedures, page 11-38

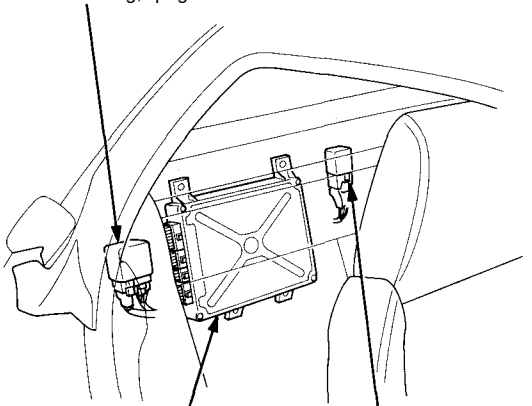

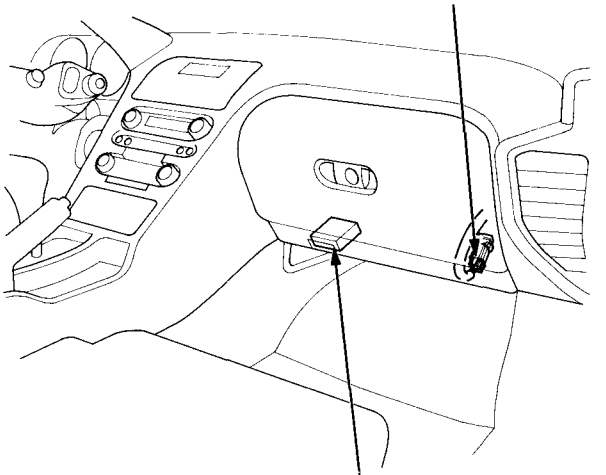

THROTTLE VALVE CONTROL MOTOR RELAY
Troubleshooting, page 11-112

ENGINE CONTROL MODULE (ECM)
Self-diagnostic Procedures, page 11-38
Troubleshooting, page 11-61

DATA LINK CONNECTOR (16P)
Self-diagnostic Procedures, page 11-38

For Troubleshooting of DTC related components, see chart on page 11-52.

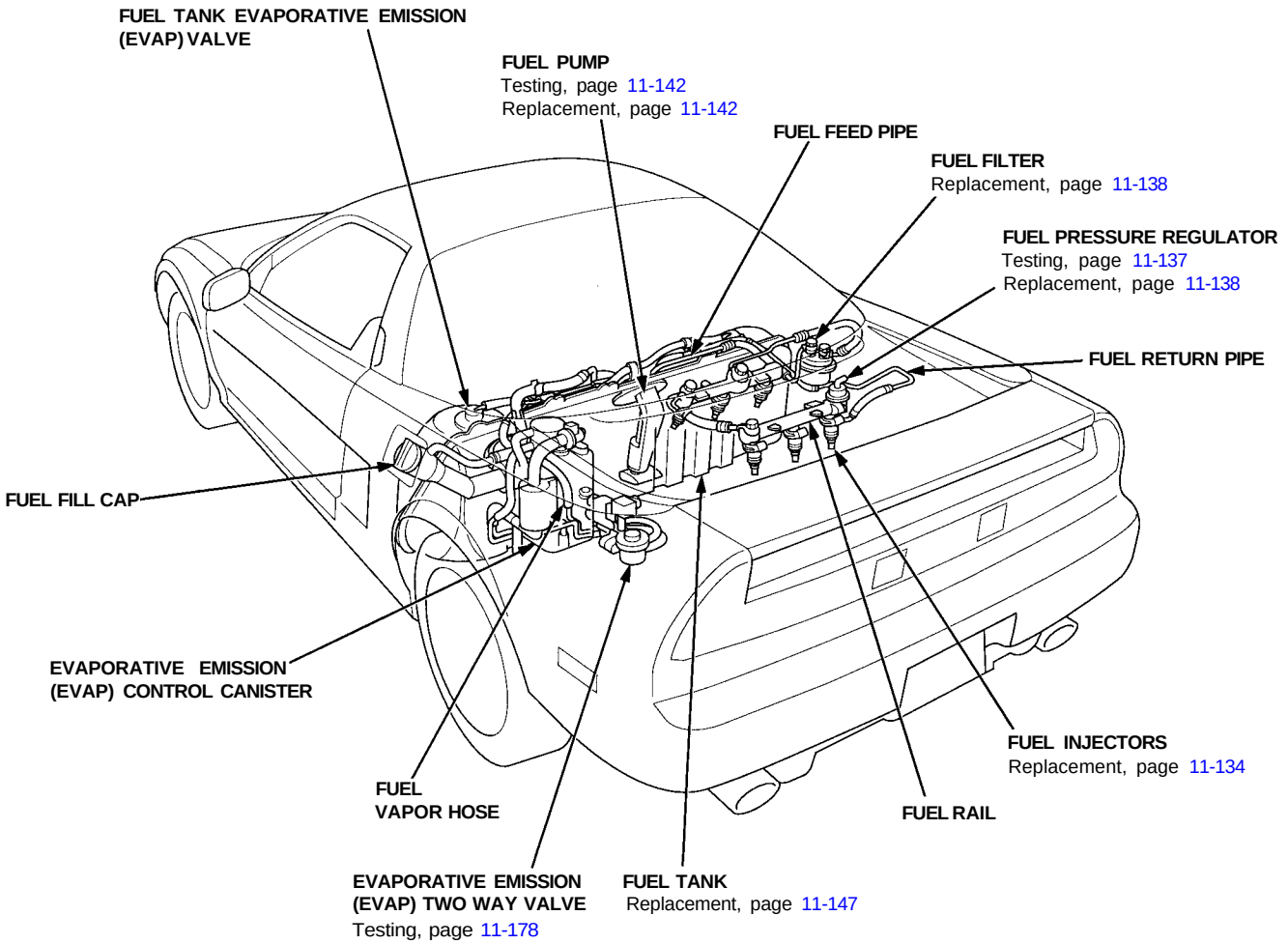

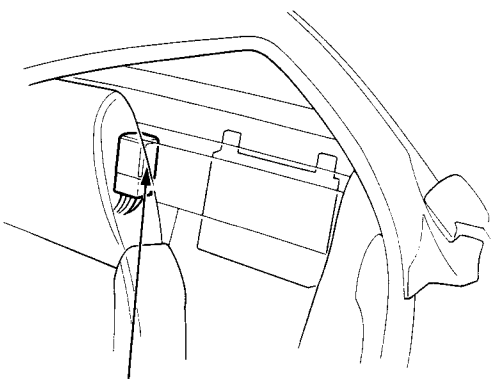

(cont'd)

Component Locations

Index (cont'd)

For Troubleshooting of DTC related components, see chart on page 11-52.

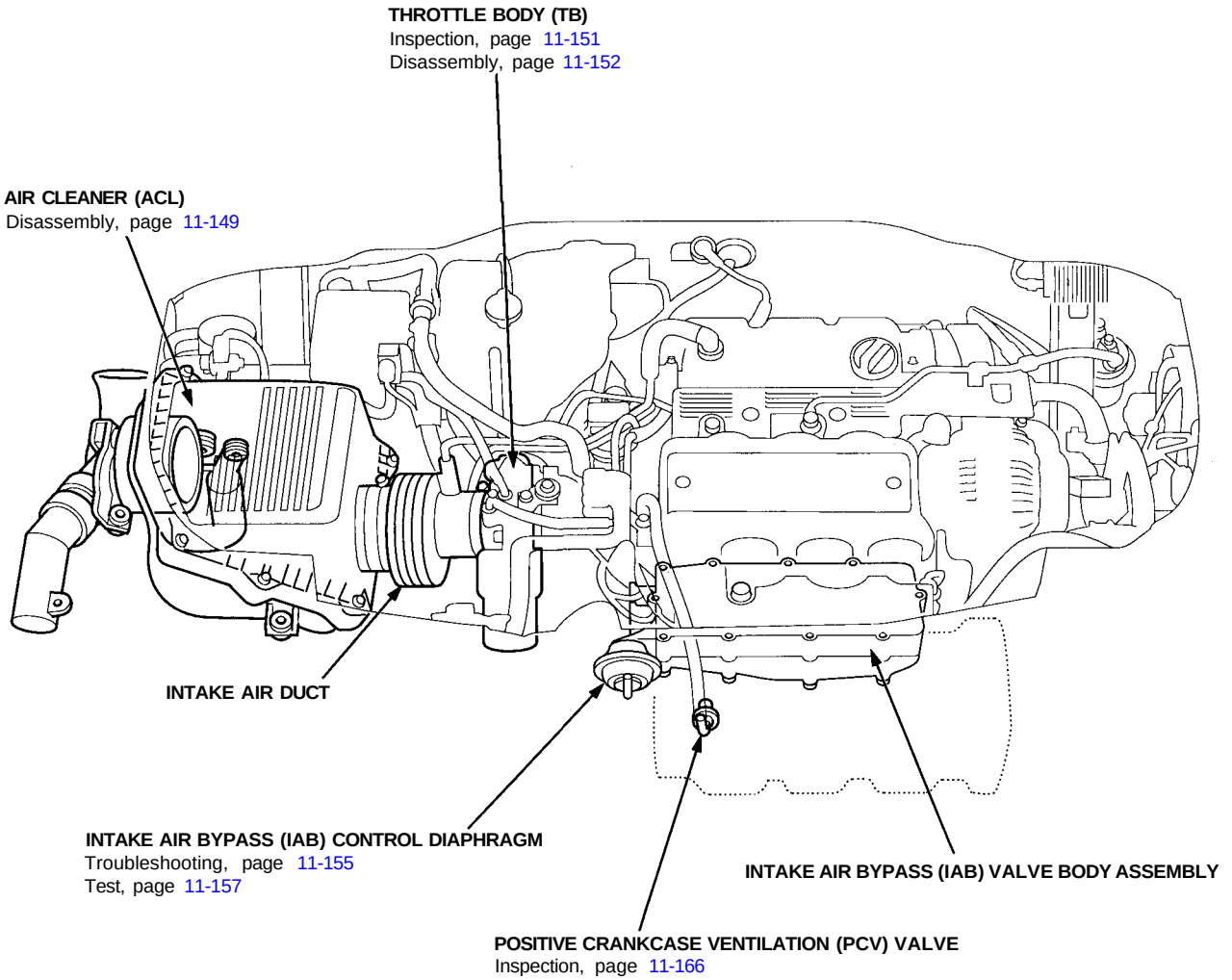

System Description

Vacuum Connections

For Troubleshooting of DTC related components, see chart on page 11-52.

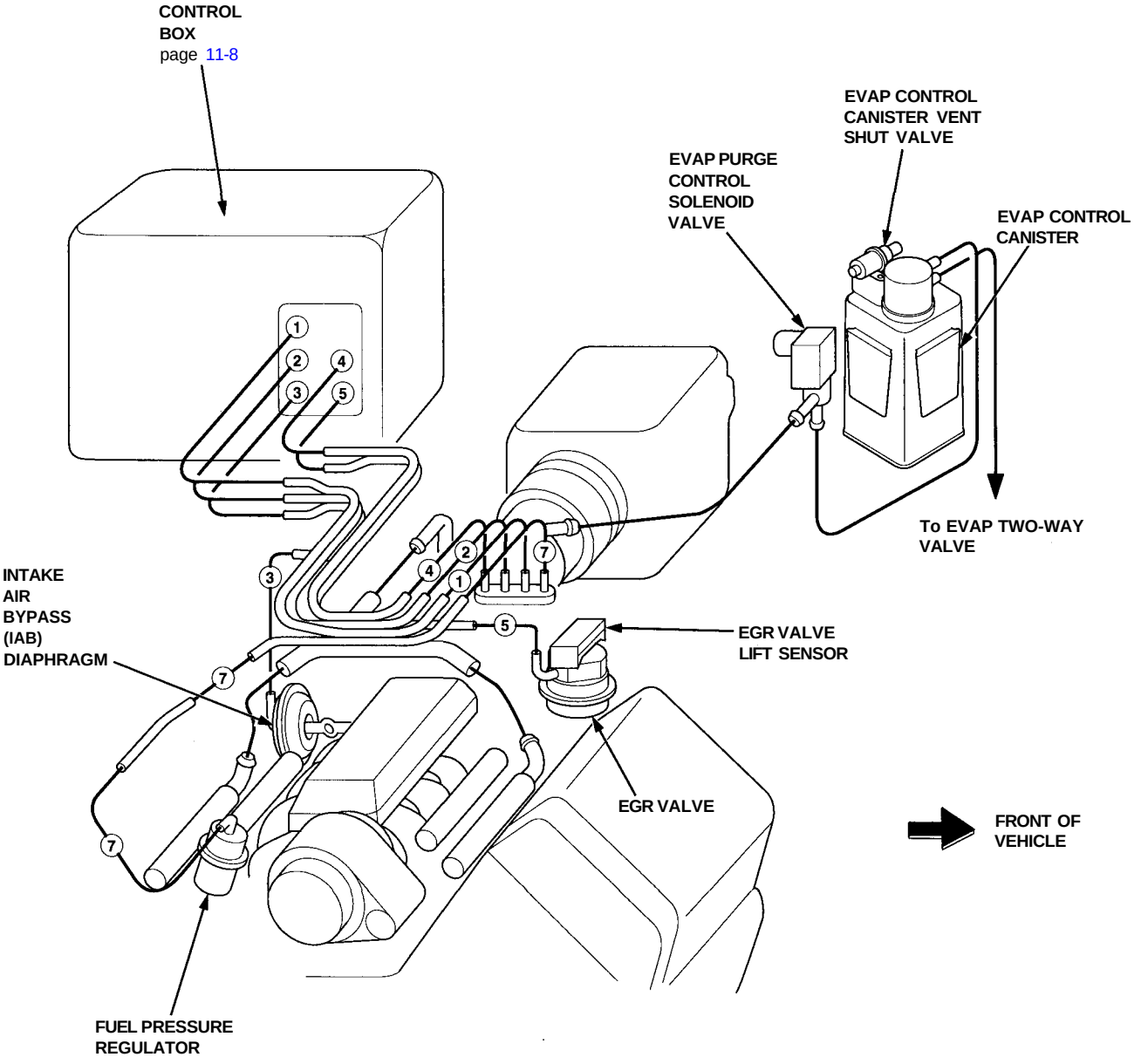

(cont'd)

System Description

Vacuum Connections (cont'd)

Control Box

For Troubleshooting of DTC related components, see chart on page 11-52.

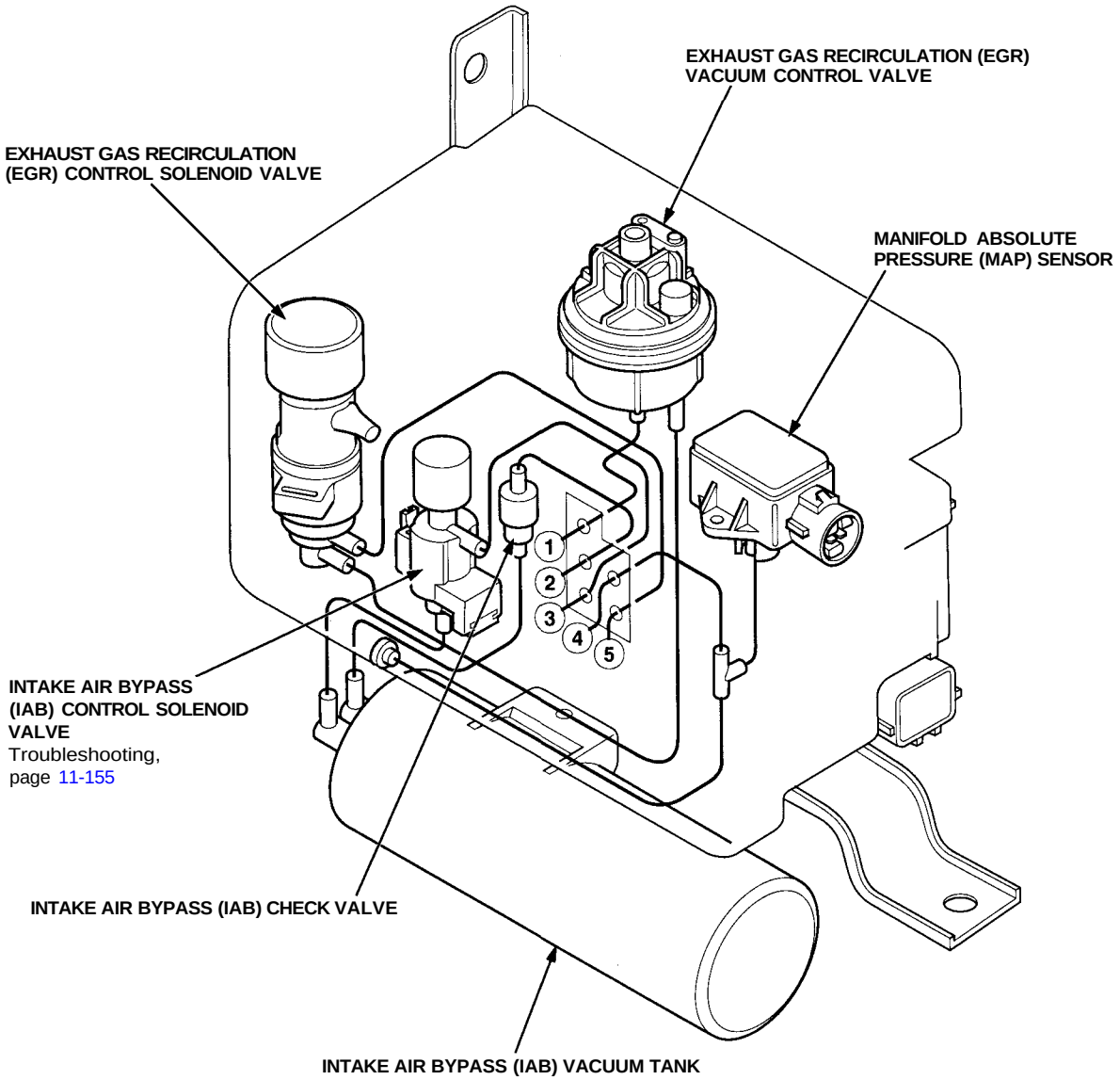

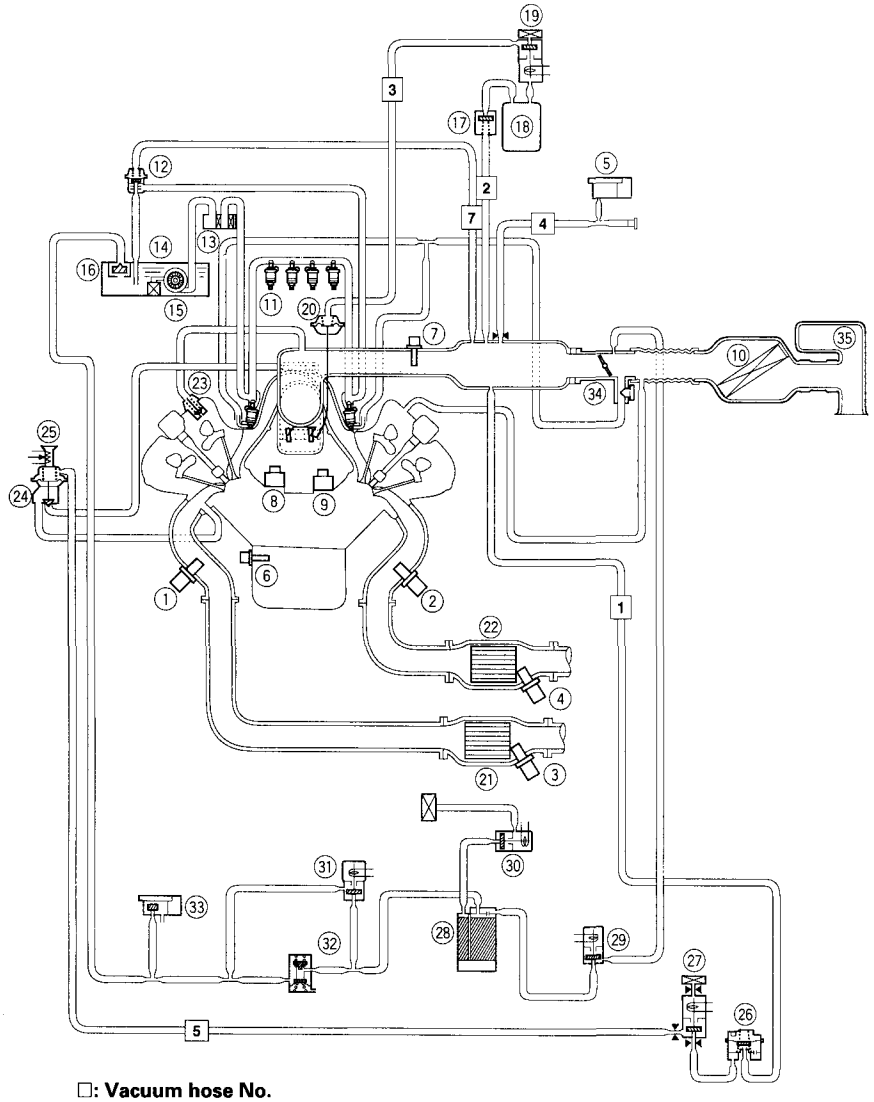

□: Vacuum hose No.

① FRONT PRIMARY HEATED OXYGEN SENSOR (HO2S) (BANK 2, SENSOR 1)
② REAR PRIMARY HEATED OXYGEN SENSOR (HO2S) (BANK 1, SENSOR 1)
③ FRONT SECONDARY HEATED OXYGEN SENSOR (HO2S) (BANK 2, SENSOR 2)
④ REAR SECONDARY HEATED OXYGEN SENSOR (HO2S) (BANK 1, SENSOR 2)
⑤ MANIFOLD ABSOLUTE PRESSURE (MAP) SENSOR
⑥ ENGINE COOLANT TEMPERATURE (ECT) SENSOR
⑦ INTAKE AIR TEMPERATURE (IAT) SENSOR
⑧ FRONT KNOCK SENSOR (KS2)
⑨ REAR KNOCK SENSOR (KS1)
⑩ AIR CLEANER (ACL)
⑪ FUEL INJECTOR
⑫ FUEL PRESSURE REGULATOR
⑬ FUEL FILTER
⑭ FUEL PUMP (FP)
⑮ FUEL TANK
⑯ FUEL TANK EVAPORATIVE EMISSION (EVAP) VALVE
⑰ INTAKE AIR BYPASS (IAB) CHECK VALVE
⑱ INTAKE AIR BYPASS (IAB) VACUUM TANK
⑲ INTAKE AIR BYPASS (IAB) CONTROL SOLENOID VALVE
⑳ INTAKE AIR BYPASS (IAB) CONTROL DIAPHRAGM
㉑ FRONT THREE WAY CATALYTIC CONVERTER (TWO
㉒ REAR THREE WAY CATALYTIC CONVERTER (TWO
㉓ POSITIVE CRANKCASE VENTILATION (PCV) VALVE
㉔ EXHAUST GAS RECIRCULATION (EGR) VALVE
㉕ EXHAUST GAS RECIRCULATION (EGR) VALVE LIFT SENSOR
㉖ EXHAUST GAS RECIRCULATION (EGR) VACUUM CONTROL VALVE
㉗ EXHAUST GAS RECIRCULATION (EGR) CONTROL SOLENOID VALVE
㉘ EVAPORATIVE EMISSION (EVAP) CONTROL CANISTER
㉙ EVAPORATIVE EMISSION (EVAP) PURGE CONTROL SOLENOID VALVE
㉚ EVAPORATIVE EMISSION (EVAP) CONTROL CANISTER VENT SHUT VALVE
㉛ EVAPORATIVE EMISSION (EVAP) BYPASS SOLENOID VALVE
㉜ EVAPORATIVE EMISSION (EVAP) TWO WAY VALVE
㉝ FUEL TANK PRESSURE SENSOR
㉞ THROTTLE BODY (TB)
㉟ RESONATOR

System Description

Electrical Connections

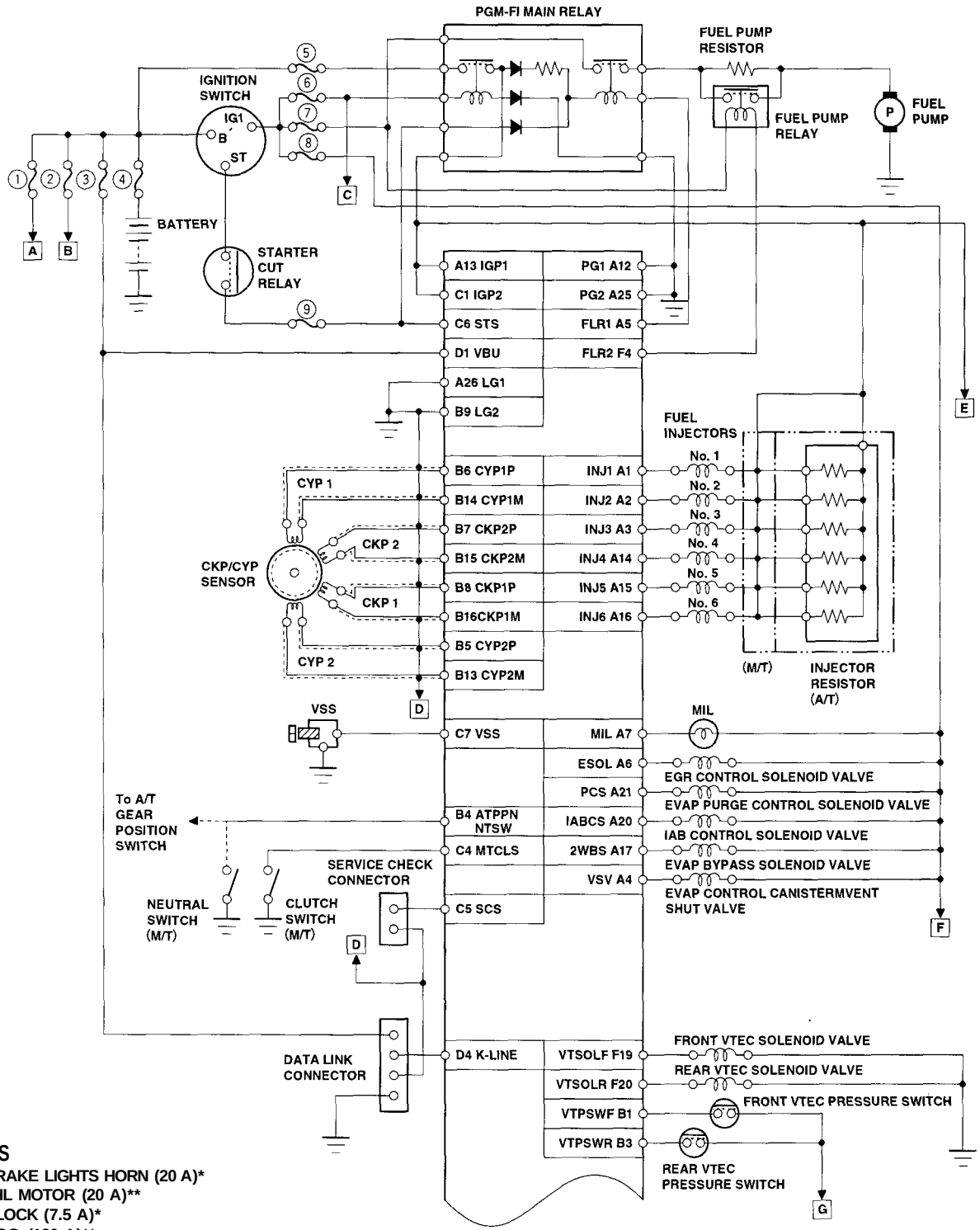

FUSES

① BRAKE LIGHTS HORN (20 A)*
② THL MOTOR (20 A)**
③ CLOCK (7.5 A)*
④ ACG (120 A)**
⑤ ACG(S) (20 A)**
⑥ IG COIL (30 A)**
⑦ No. 2 FUEL PUMP SRS2 (15 A)***
⑧ No. 5 BACK-UP LIGHTS
ALTERNATOR
TURN SIGNALS (15 A)**»
⑨ No. 7 STARTER SIGNAL (7.5 A)***

* : In the under-hood fuse/relay box
** : In the engine compartment fuse/relay box
*** : In the under-dash fuse box

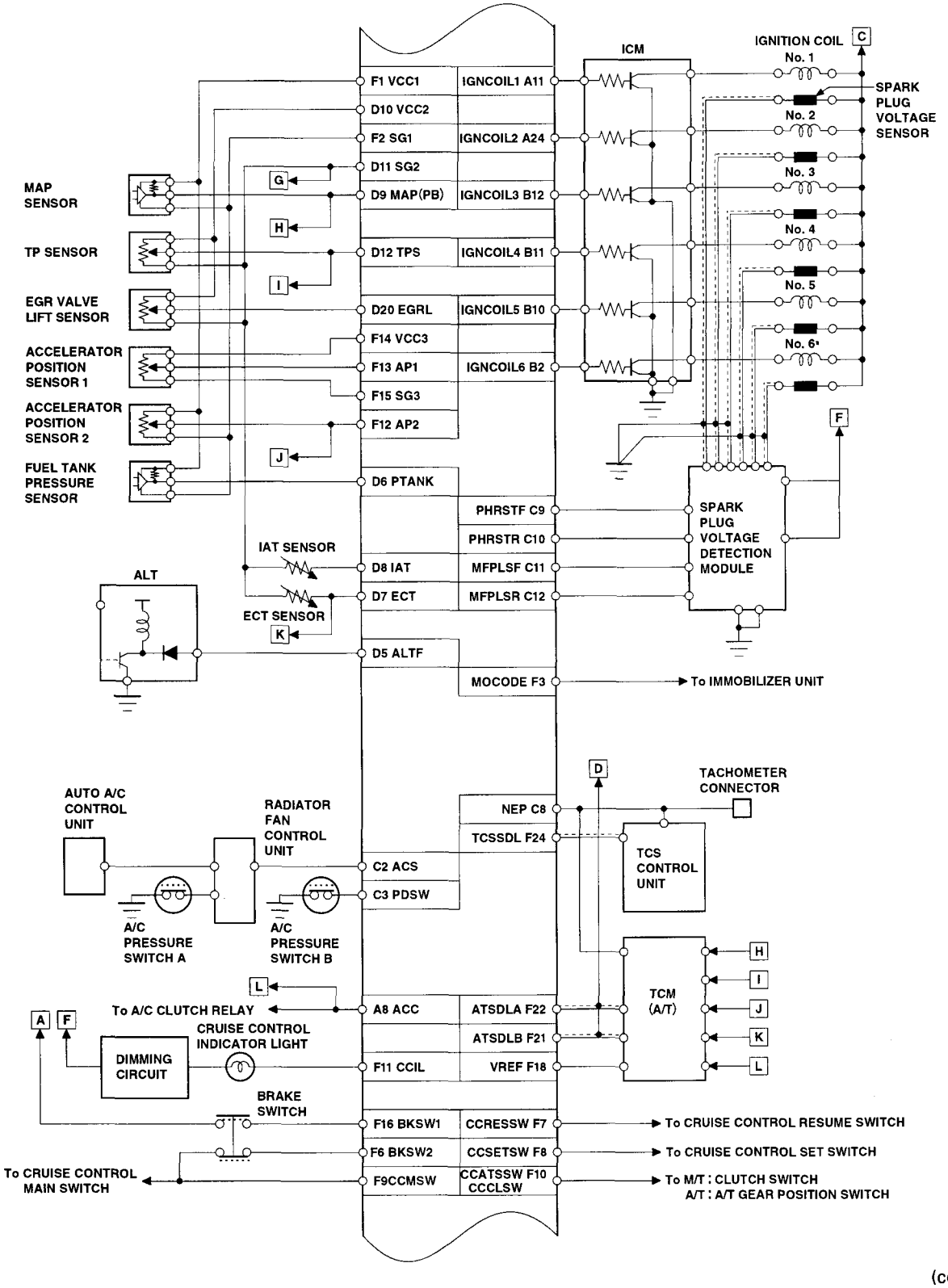
ICM
IGNITION COIL
No. 1
No. 2
No. 3
No. 4
No. 5
No. 6
SPARK PLUG VOLTAGE SENSOR
MAP SENSOR
TP SENSOR
EGR VALVE LIFT SENSOR
ACCELERATOR POSITION SENSOR 1
ACCELERATOR POSITION SENSOR 2
FUEL TANK PRESSURE SENSOR
F1 VCC1
D10 VCC2
F2 SG1
D11 SG2
D9 MAP(PB)
D12 TPS
D20 EGRL
F14 VCC3
F13 AP1
F15 SG3
F12 AP2
D6 PTANK
IGNCOIL1 A11
IGNCOIL2 A24
IGNCOIL3 B12
IGNCOIL4 B11
IGNCOIL5 B10
IGNCOIL6 B2
PHRSTF C9
PHRSTR C10
MFPLSF C11
MFPLSR C12
SPARK PLUG VOLTAGE DETECTION MODULE
IAT SENSOR
ECT SENSOR
ALT
D8 IAT
D7 ECT
D5 ALTF
MOCODE F3
To IMMOBILIZER UNIT
TACHOMETER CONNECTOR
AUTO A/C CONTROL UNIT
RADIATOR FAN CONTROL UNIT
NEP C8
TCSSDL F24
TCS CONTROL UNIT
C2 ACS
C3 PDSW
A/C PRESSURE SWITCH A
A/C PRESSURE SWITCH B
TCM (A/T)
To A/C CLUTCH RELAY
A8 ACC
ATSDLA F22
ATSDLB F21
CRUISE CONTROL INDICATOR LIGHT
DIMMING CIRCUIT
F11 CCIL
VREF F18
BRAKE SWITCH
F16 BKSW1
F6 BKSW2
F9CCMSW
CCRESSW F7
CCSETSW F8
CCATSSW F10
CCCLSW
To CRUISE CONTROL RESUME SWITCH
To CRUISE CONTROL SET SWITCH
To CRUISE CONTROL MAIN SWITCH
To M/T : CLUTCH SWITCH
A/T : A/T GEAR POSITION SWITCH

(cont'd)

Electrical Connections (cont'd)

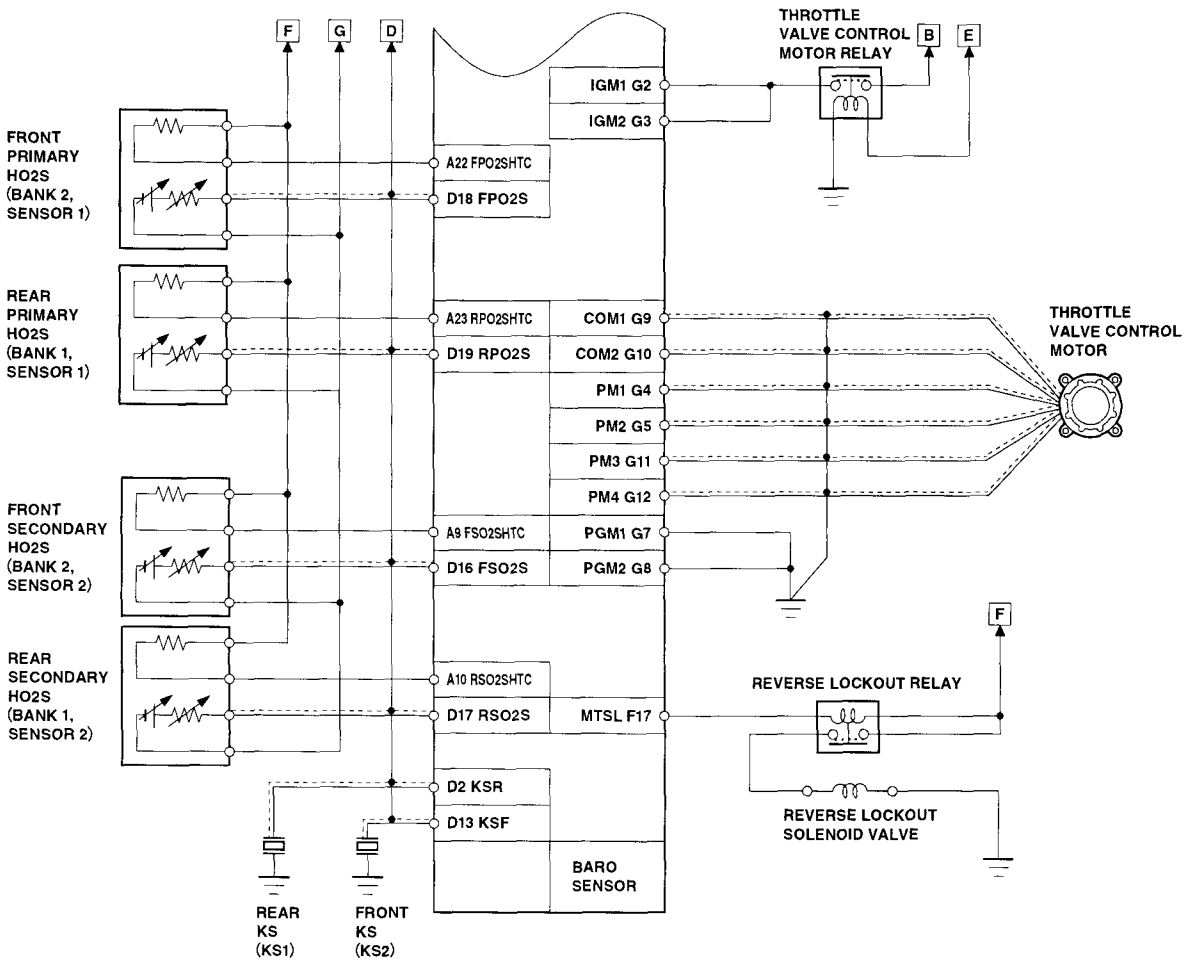

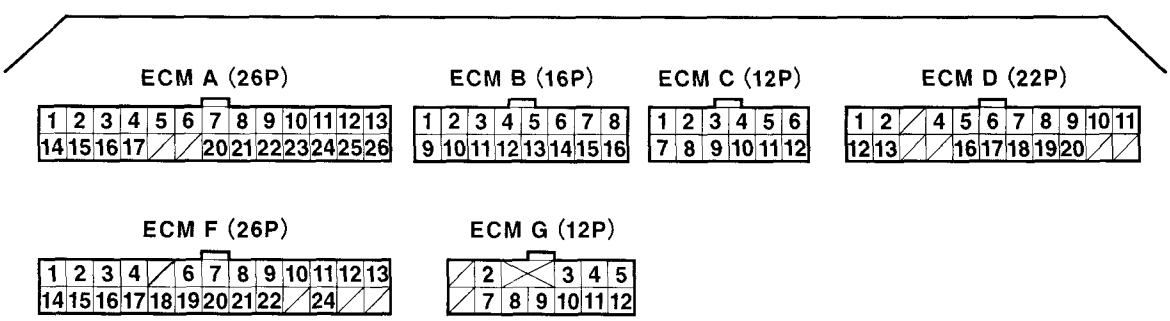

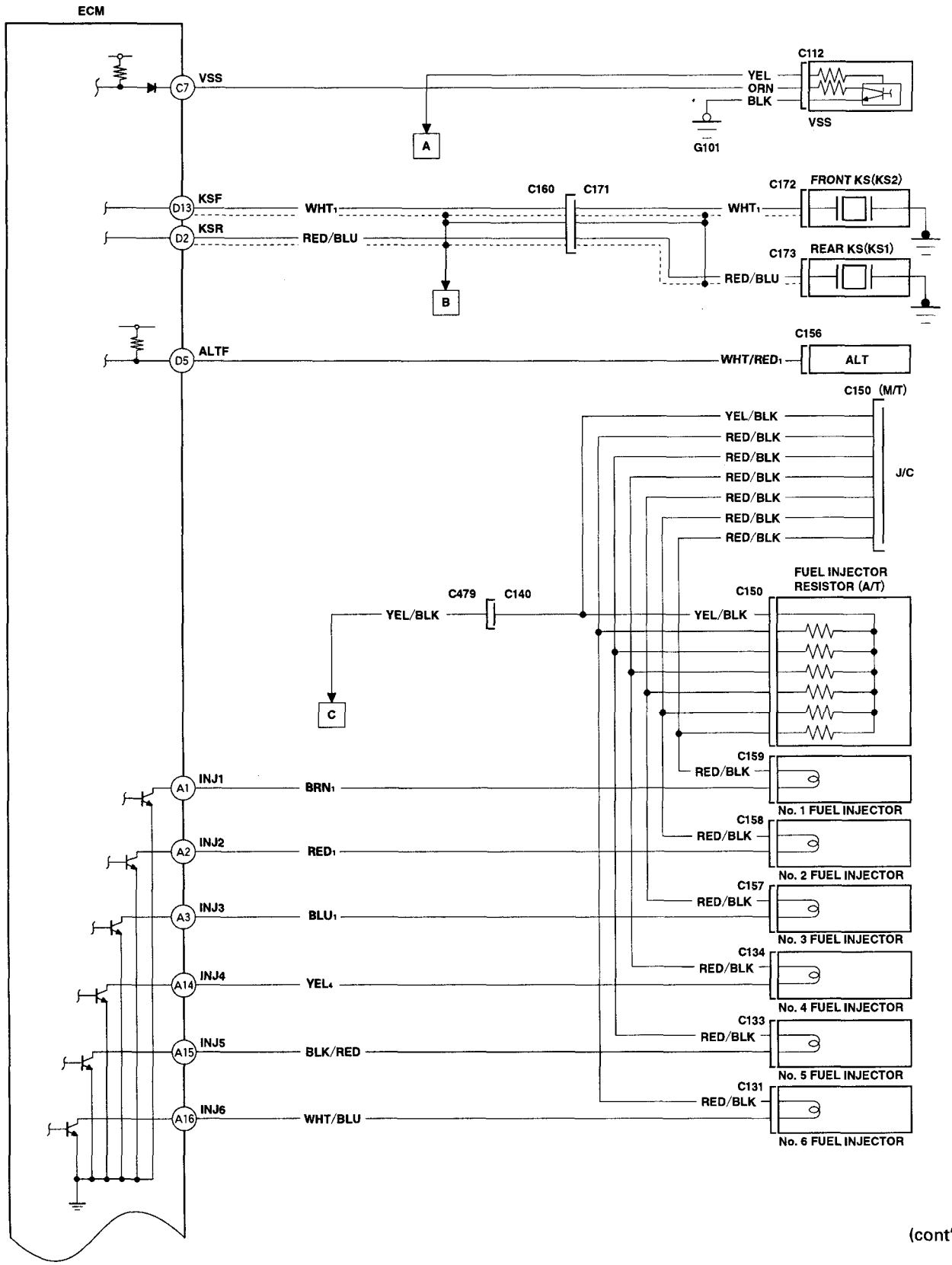
ECM
C7
VSS
C112
YEL
ORN
BLK
VSS
A
G101
D13
KSF
WHT1
C160
C171
C172
FRONT KS(KS2)
WHT1
D2
KSR
RED/BLU
C173
REAR KS(KS1)
RED/BLU
B
D5
ALTF
C156
WHT/RED1
ALT
C150 (M/T)
YEL/BLK
RED/BLK
RED/BLK
RED/BLK
RED/BLK
RED/BLK
J/C
FUEL INJECTOR
RESISTOR (A/T)
C479
C140
C150
YEL/BLK
YEL/BLK
C
C159
RED/BLK
No. 1 FUEL INJECTOR
C158
RED/BLK
No. 2 FUEL INJECTOR
C157
RED/BLK
No. 3 FUEL INJECTOR
C134
RED/BLK
No. 4 FUEL INJECTOR
C133
RED/BLK
No. 5 FUEL INJECTOR
C131
RED/BLK
No. 6 FUEL INJECTOR
A1
INJ1
BRN1
A2
INJ2
RED1
A3
INJ3
BLU1
A14
INJ4
YEL4
A15
INJ5
BLK/RED
A16
INJ6
WHT/BLU

(cont'd)

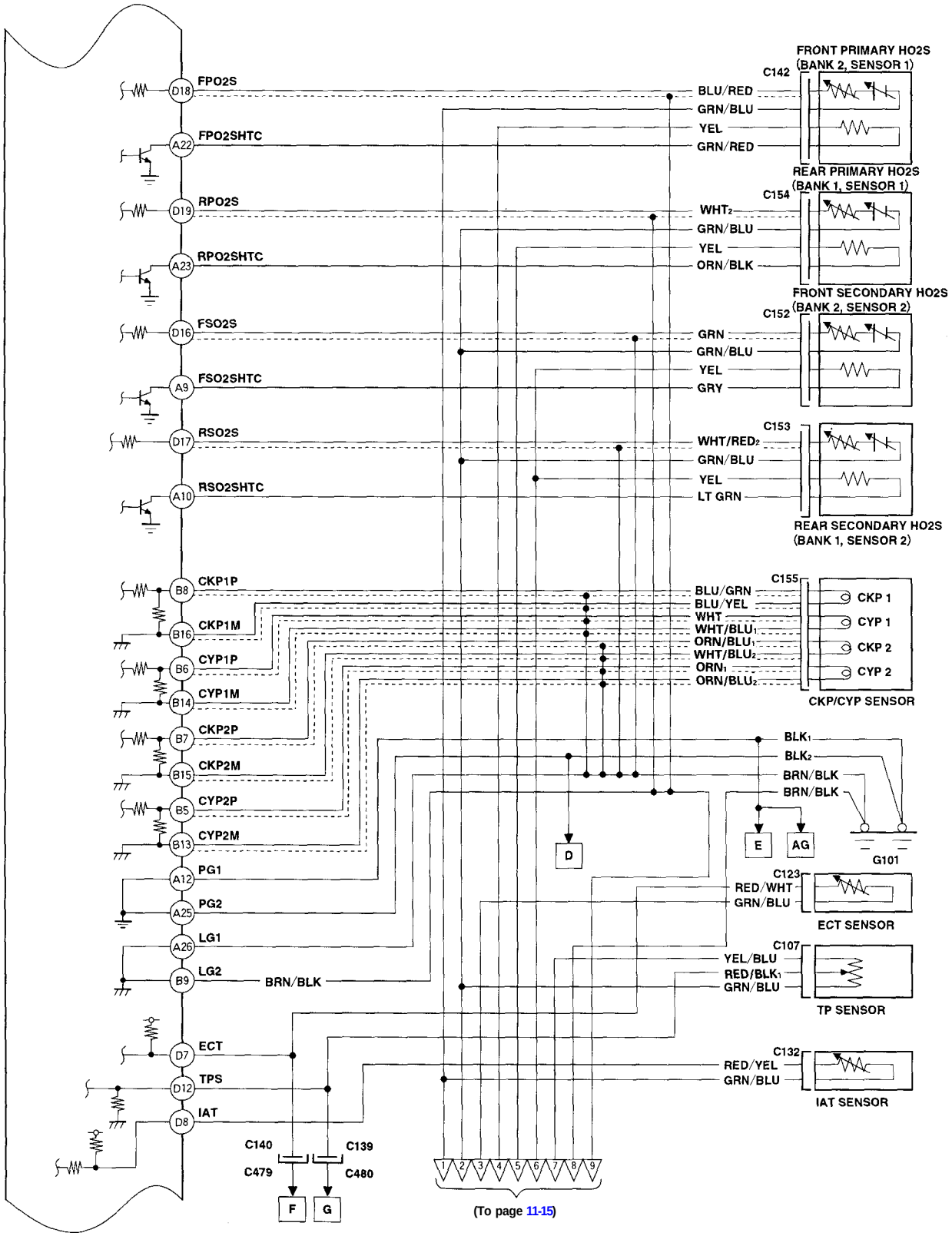
FRONT PRIMARY HO2S (BANK 2, SENSOR 1)
C142
REAR PRIMARY HO2S (BANK 1, SENSOR 1)
C154
FRONT SECONDARY HO2S (BANK 2, SENSOR 2)
C152
REAR SECONDARY HO2S (BANK 1, SENSOR 2)
C153
CKP/CYP SENSOR
C155
CKP 1
CYP 1
CKP 2
CYP 2
ECT SENSOR
C123
TP SENSOR
C107
IAT SENSOR
C132
G101
FPO2S
FPO2SHTC
RPO2S
RPO2SHTC
FSO2S
FSO2SHTC
RSO2S
RSO2SHTC
CKP1P
CKP1M
CYP1P
CYP1M
CKP2P
CKP2M
CYP2P
CYP2M
PG1
PG2
LG1
LG2
ECT
TPS
IAT
BLU/RED
GRN/BLU
YEL
GRN/RED
WHT2
ORN/BLK
GRN
GRY
WHT/RED2
LT GRN
BLU/GRN
BLU/YEL
WHT
WHT/BLU1
ORN/BLU1
WHT/BLU2
ORN1
ORN/BLU2
BLK1
BLK2
BRN/BLK
RED/WHT
YEL/BLU
RED/BLK1
RED/YEL
C140
C139
C479
C480
(To page 11-15)

(From page 11-14)

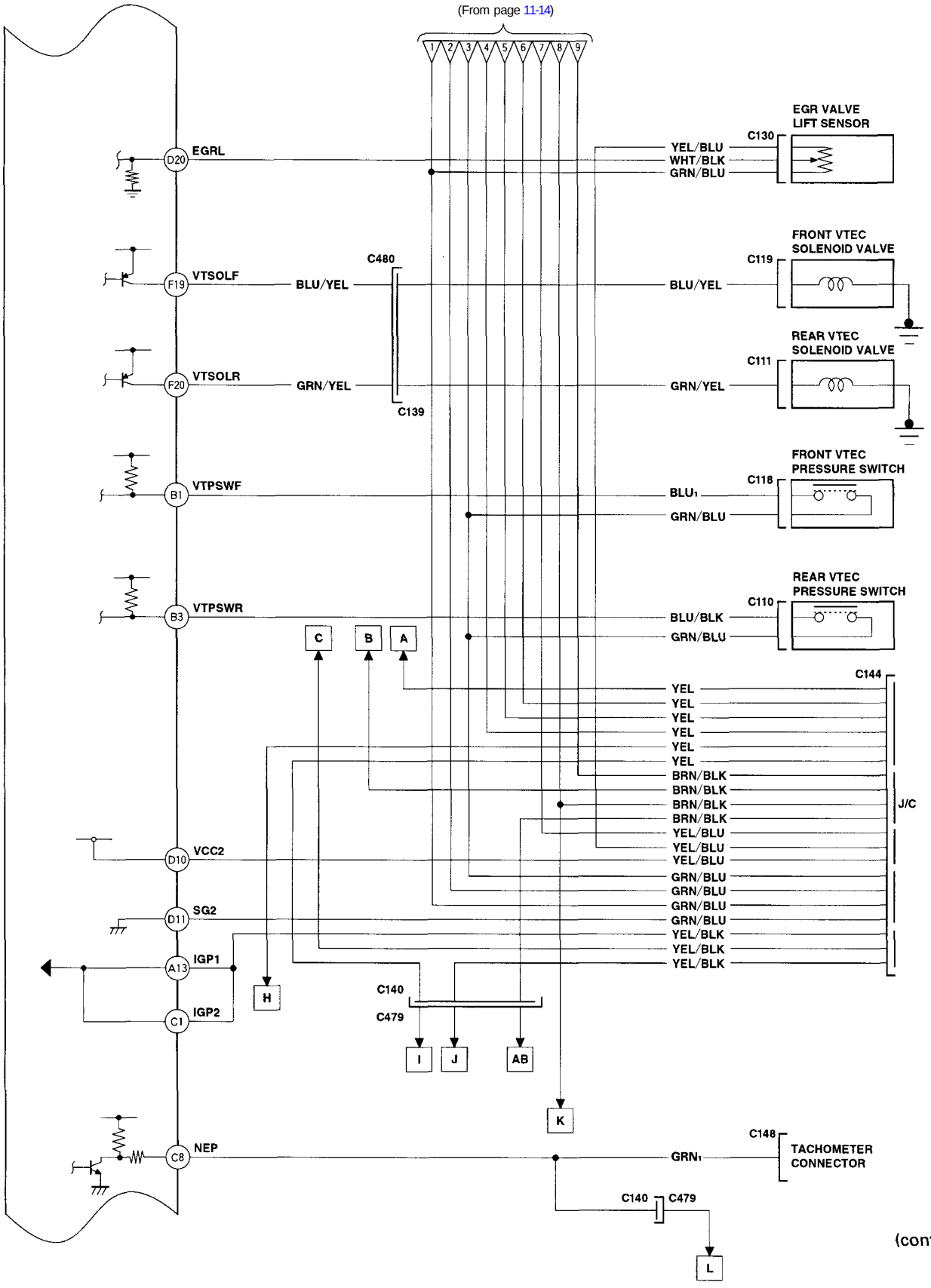

(cont'd)

Electrical Connections (cont'd)

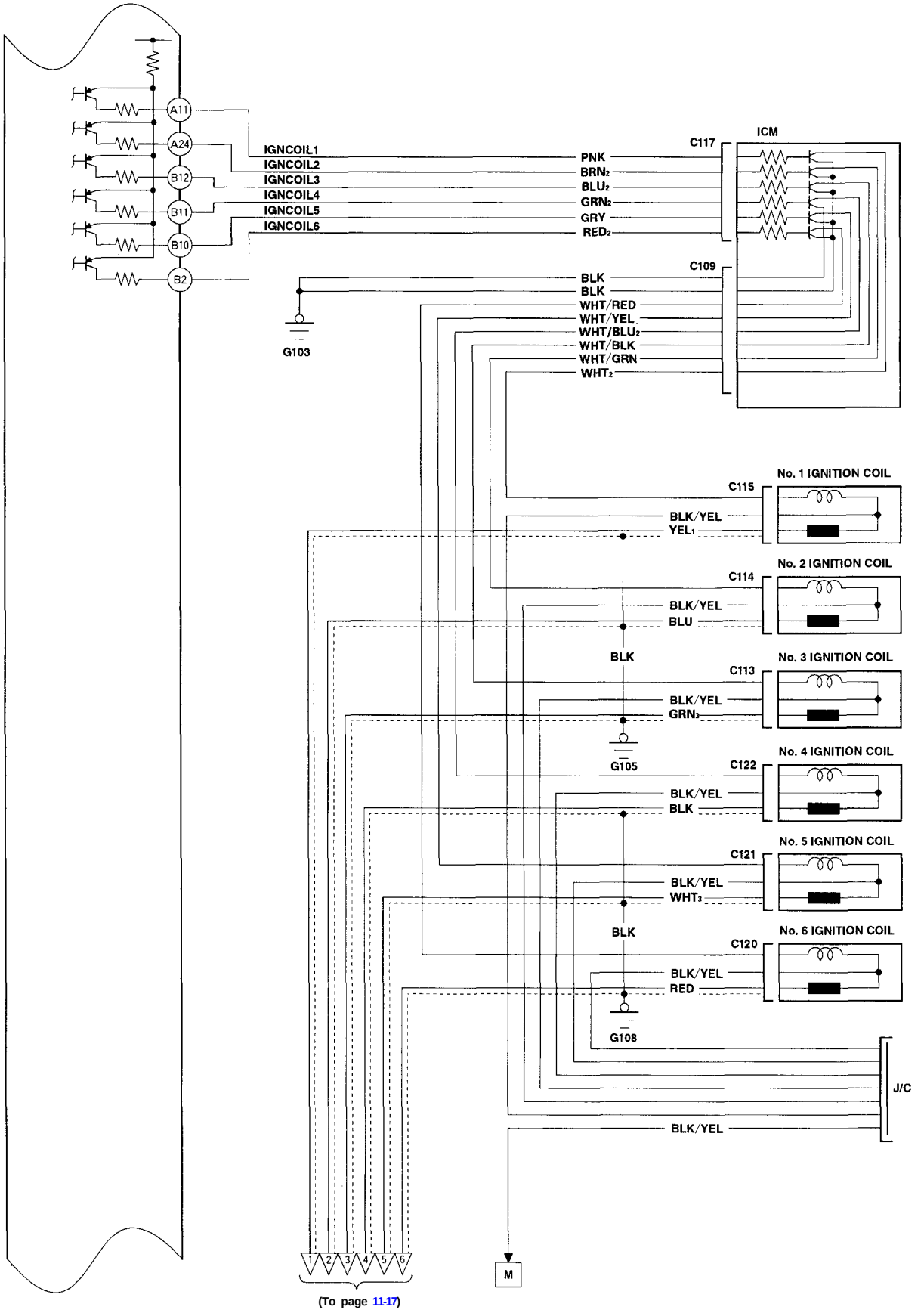

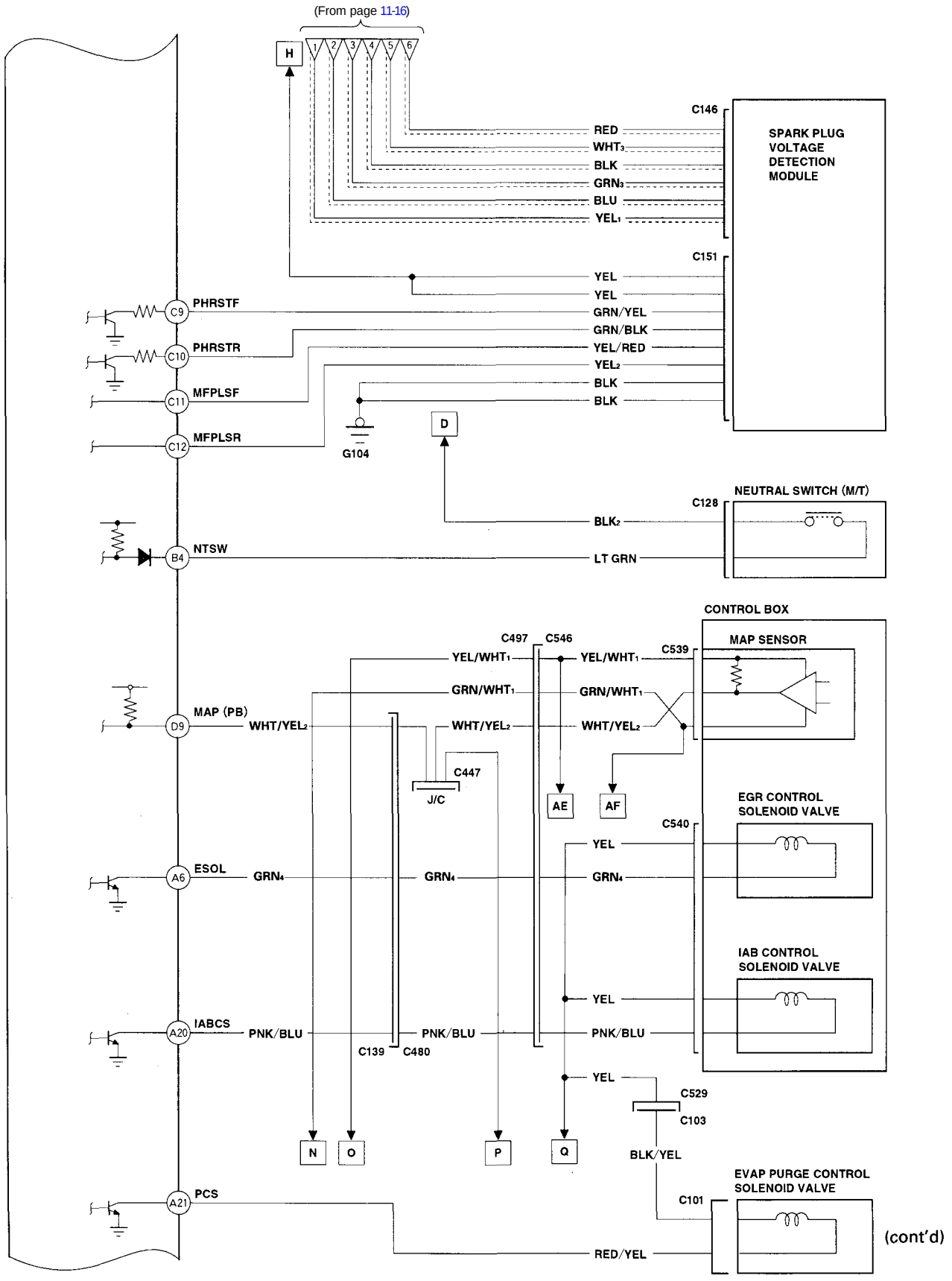
(From page 11-16)
H
1
2
3
4
5
6
C146
RED
WHT3
BLK
GRN3
BLU
YEL1
SPARK PLUG VOLTAGE DETECTION MODULE
C151
YEL
YEL
GRN/YEL
GRN/BLK
YEL/RED
YEL2
BLK
BLK
C9
PHRSTF
C10
PHRSTR
C11
MFPLSF
C12
MFPLSR
G104
D
NEUTRAL SWITCH (M/T)
C128
BLK2
LT GRN
B4
NTSW
CONTROL BOX
MAP SENSOR
C539
C497
C546
YEL/WHT1
YEL/WHT1
GRN/WHT1
GRN/WHT1
WHT/YEL2
WHT/YEL2
D9
MAP (PB)
WHT/YEL2
C447
J/C
AE
AF
EGR CONTROL SOLENOID VALVE
C540
YEL
A6
ESOL
GRN4
GRN4
GRN4
IAB CONTROL SOLENOID VALVE
YEL
A20
IABCS
PNK/BLU
PNK/BLU
PNK/BLU
C139
C480
YEL
C529
C103
BLK/YEL
N
O
P
Q
EVAP PURGE CONTROL SOLENOID VALVE
C101
A21
PCS
RED/YEL

(cont'd)

Electrical Connections (cont'd)

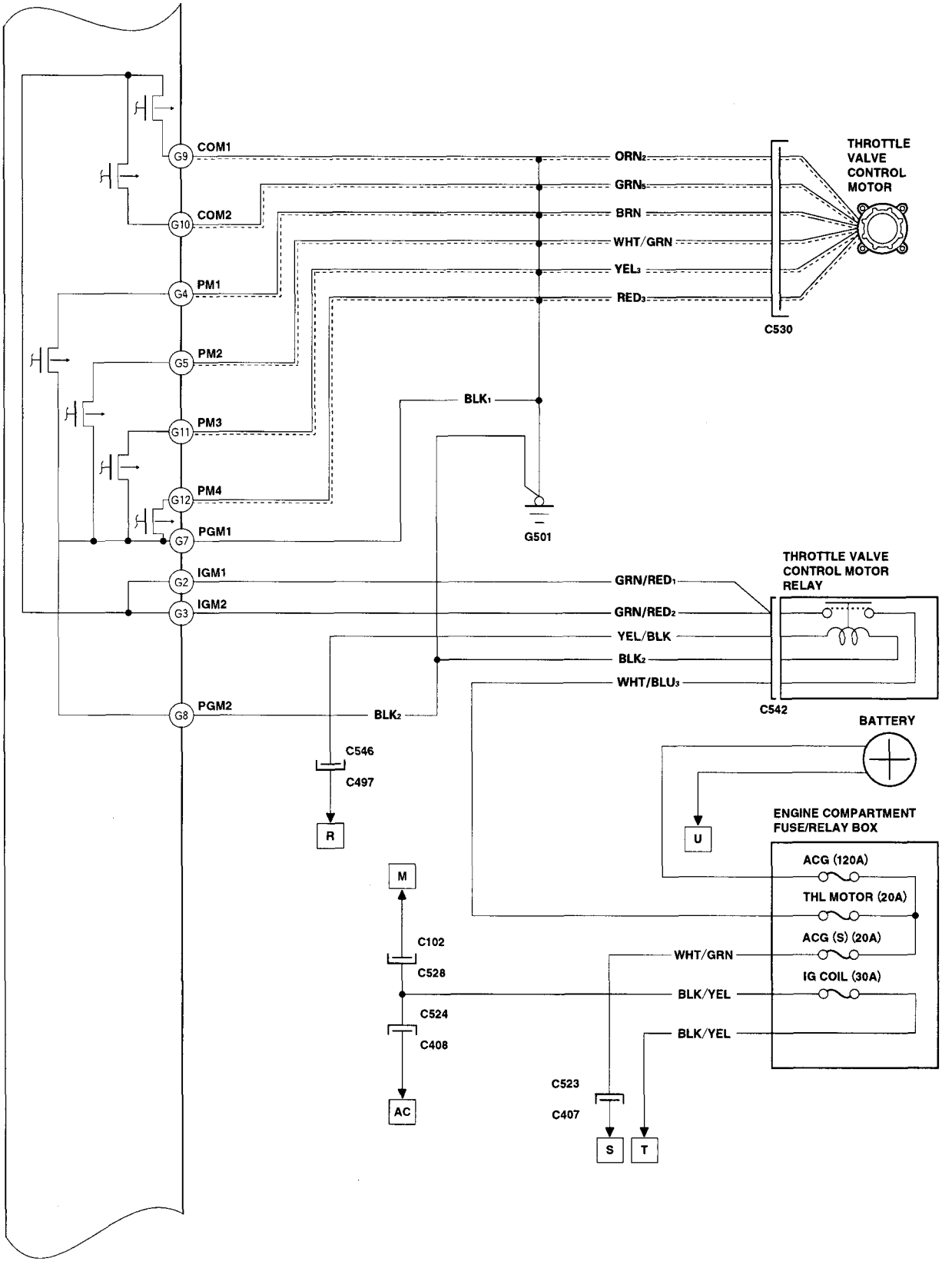

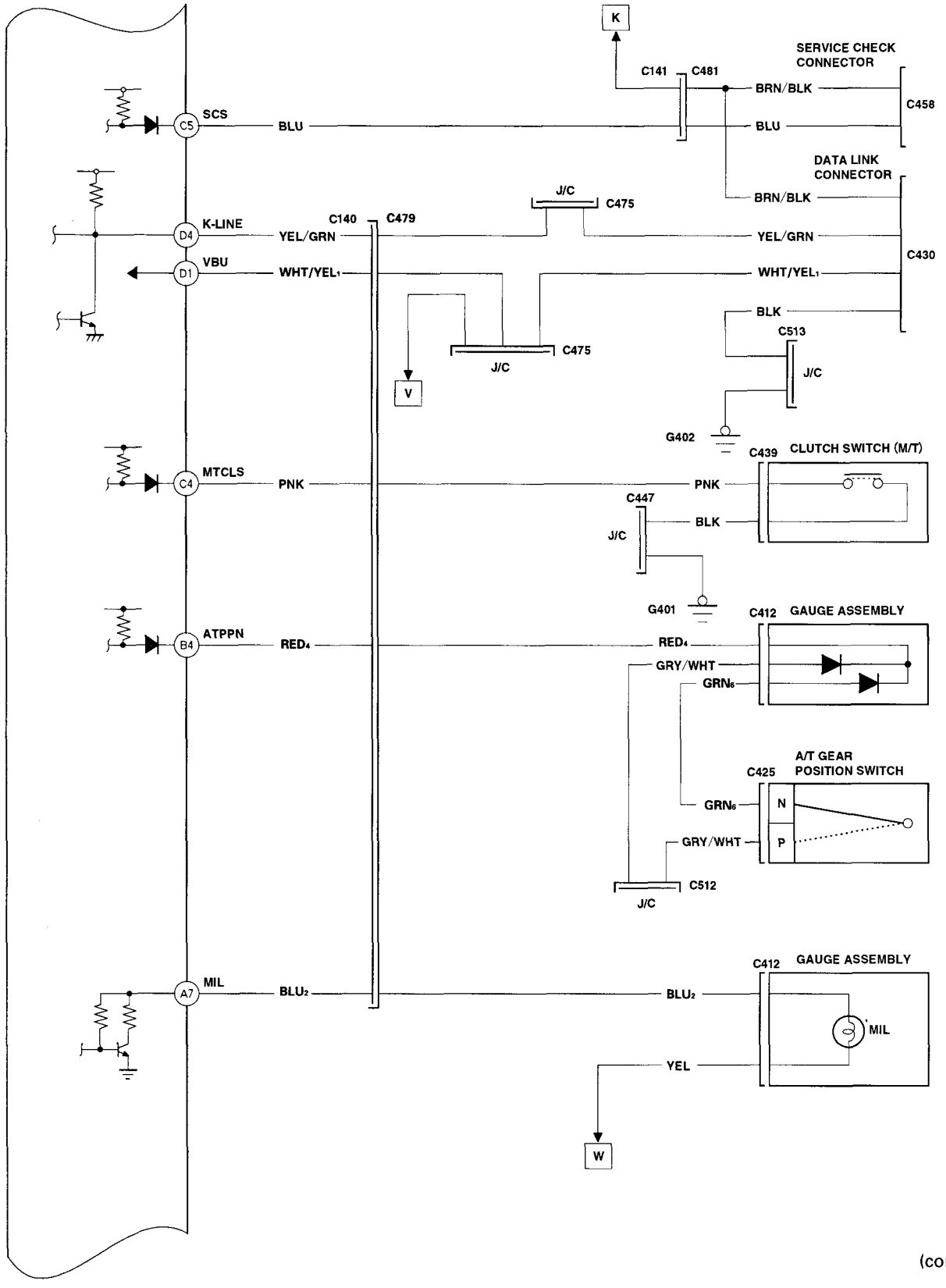
K
SERVICE CHECK CONNECTOR
C141
C481
BRN/BLK
BLU
C458
SCS
C5
BLU
DATA LINK CONNECTOR
BRN/BLK
J/C
C475
C140
C479
K-LINE
D4
YEL/GRN
YEL/GRN
C430
VBU
D1
WHT/YEL1
WHT/YEL1
BLK
C513
J/C
C475
J/C
V
G402
C439
CLUTCH SWITCH (M/T)
MTCLS
C4
PNK
PNK
C447
J/C
BLK
G401
C412
GAUGE ASSEMBLY
ATPPN
B4
RED4
RED4
GRY/WHT
GRN6
A/T GEAR POSITION SWITCH
C425
GRN6
N
P
GRY/WHT
C512
J/C
C412
GAUGE ASSEMBLY
MIL
A7
BLU2
BLU2
MIL
YEL
W

(cont'd)

Electrical Connections (cont'd)

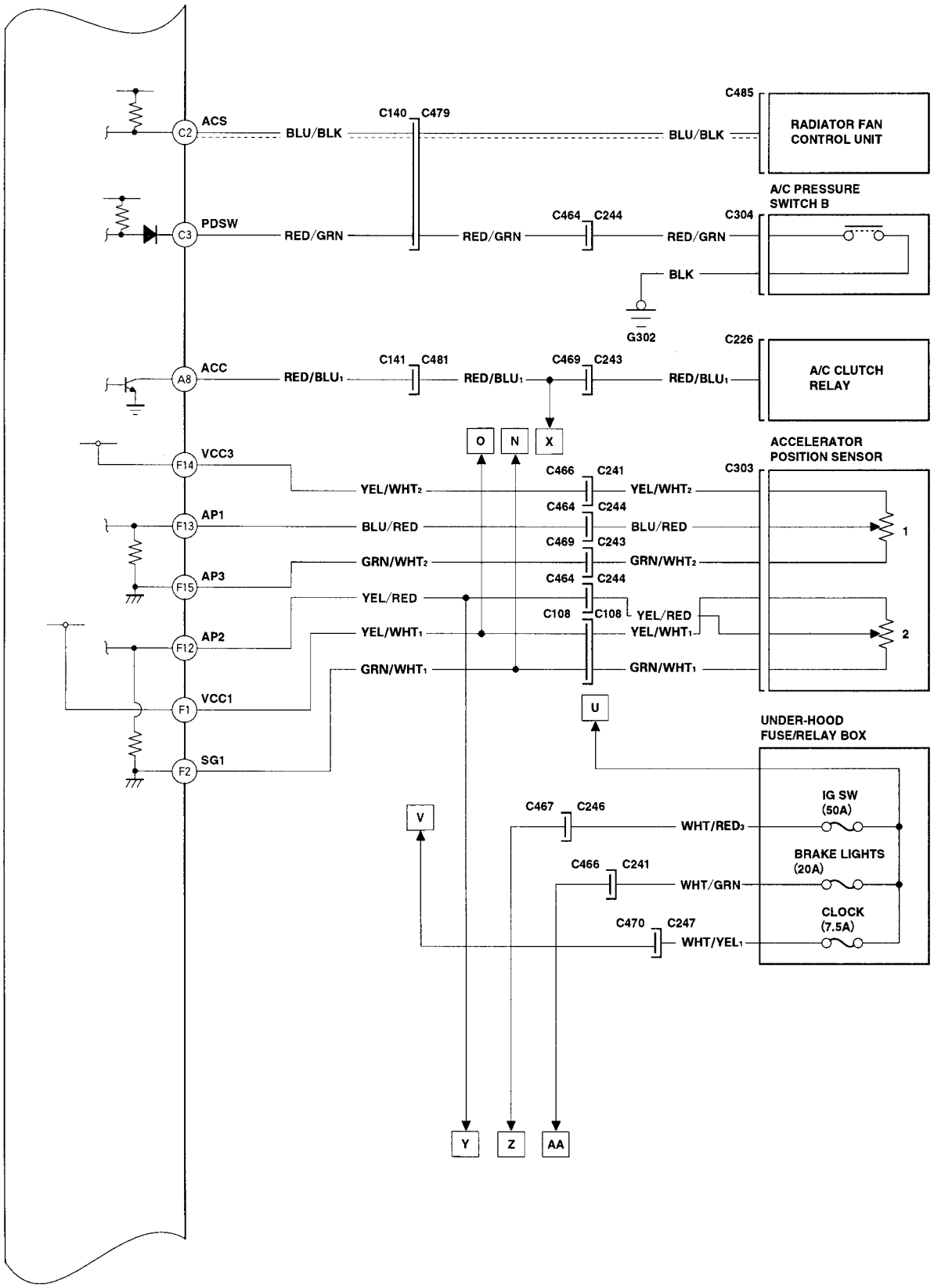

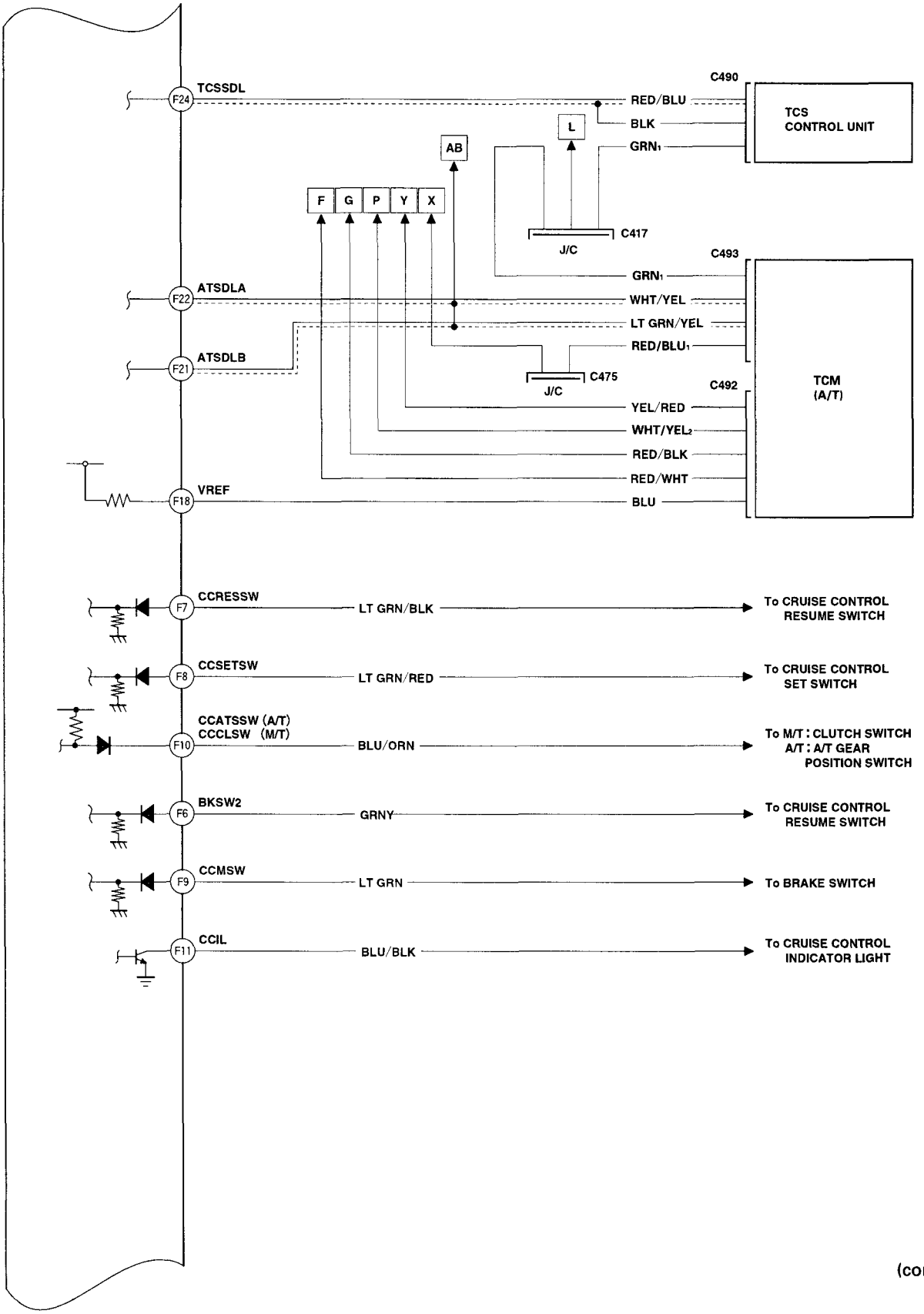
TCSSDL
F24
C490
RED/BLU
BLK
GRN1
TCS
CONTROL UNIT
L
AB
F
G
P
Y
X
C417
J/C
C493
GRN1
ATSDLA
F22
WHT/YEL
LT GRN/YEL
ATSDLB
F21
RED/BLU1
C475
J/C
C492
TCM
(A/T)
YEL/RED
WHT/YEL2
RED/BLK
RED/WHT
VREF
F18
BLU
CCRESSW
F7
LT GRN/BLK
To CRUISE CONTROL
RESUME SWITCH
CCSETSW
F8
LT GRN/RED
To CRUISE CONTROL
SET SWITCH
CCATSSW (A/T)
CCCLSW (M/T)
F10
BLU/ORN
To M/T : CLUTCH SWITCH
A/T : A/T GEAR
POSITION SWITCH
BKSW2
F6
GRNY
To CRUISE CONTROL
RESUME SWITCH
CCMSW
F9
LT GRN
To BRAKE SWITCH
CCIL
F11
BLU/BLK
To CRUISE CONTROL
INDICATOR LIGHT

(cont'd)

Electrical Connections (cont'd)

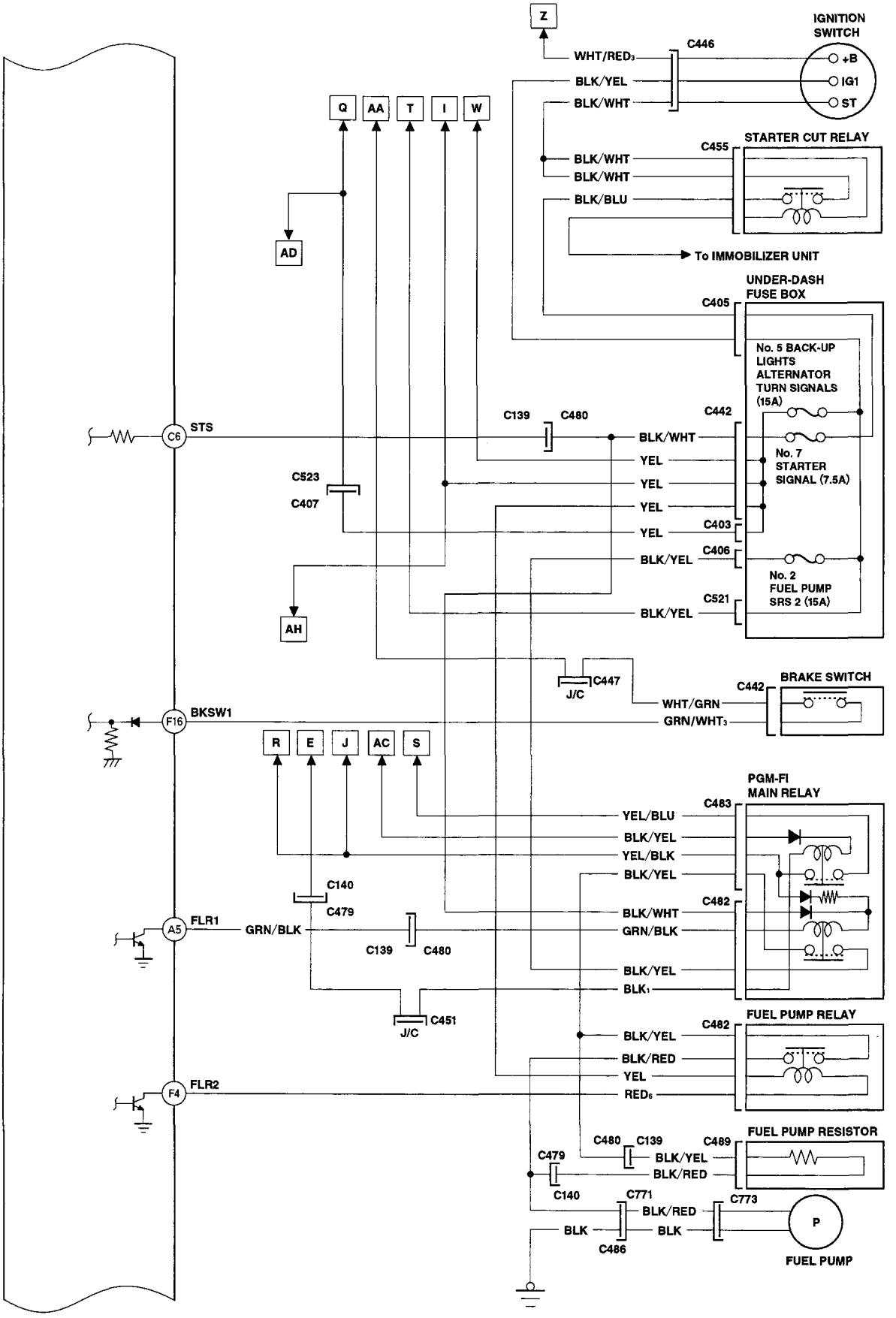

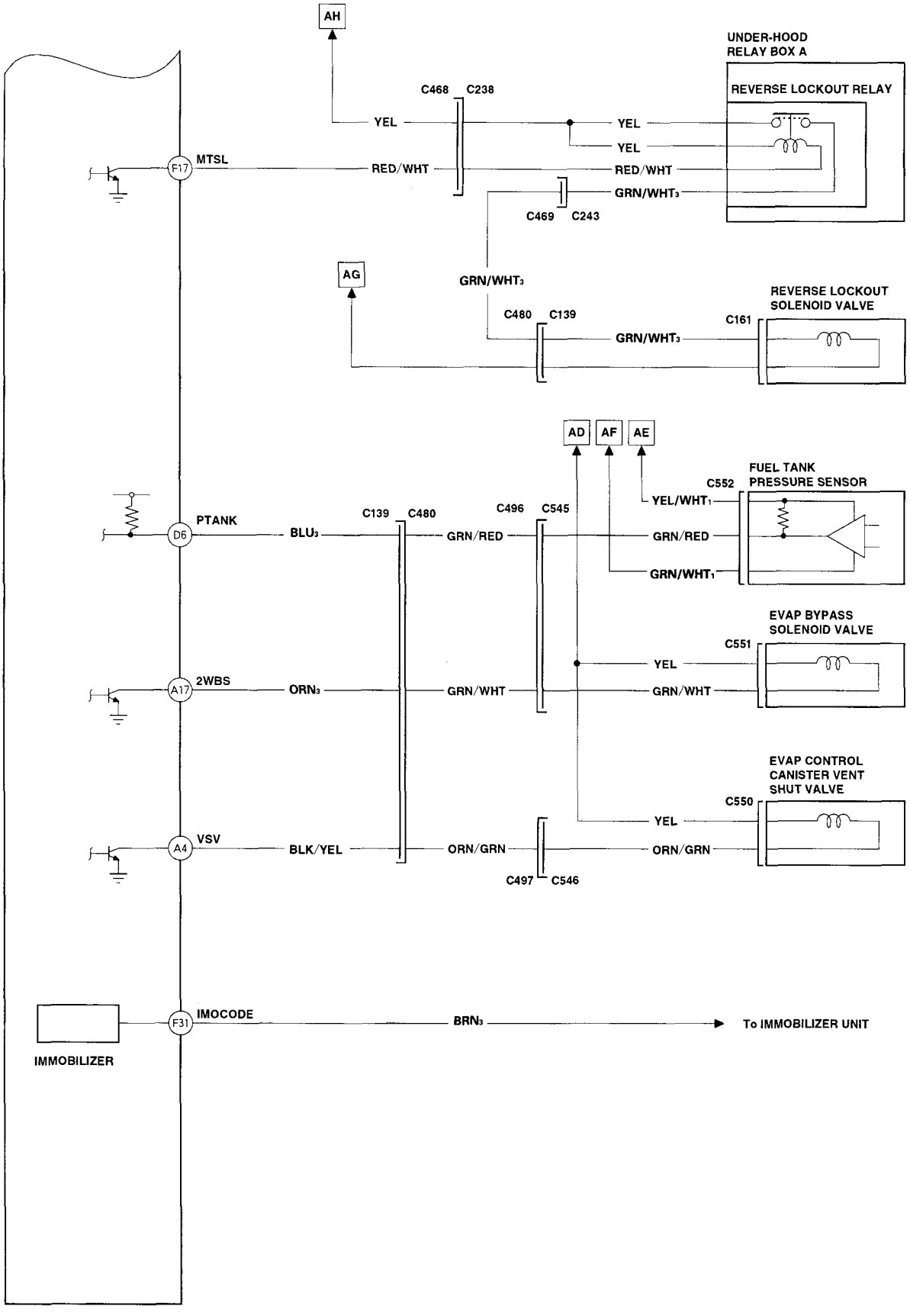
AH
UNDER-HOOD
RELAY BOX A
REVERSE LOCKOUT RELAY
C468
C238
YEL
YEL
YEL
F17
MTSL
RED/WHT
RED/WHT
GRN/WHT3
C469
C243
AG
GRN/WHT3
REVERSE LOCKOUT
SOLENOID VALVE
C480
C139
C161
GRN/WHT3
AD
AF
AE
FUEL TANK
PRESSURE SENSOR
C552
YEL/WHT1
D6
PTANK
BLU3
C139
C480
GRN/RED
C496
C545
GRN/RED
GRN/WHT1
EVAP BYPASS
SOLENOID VALVE
C551
YEL
A17
2WBS
ORN3
GRN/WHT
GRN/WHT
EVAP CONTROL
CANISTER VENT
SHUT VALVE
C550
YEL
A4
VSV
BLK/YEL
ORN/GRN
ORN/GRN
C497
C546
F31
IMOCODE
BRN3
To IMMOBILIZER UNIT
IMMOBILIZER

System Connectors [Engine Compartment (Right Side)]

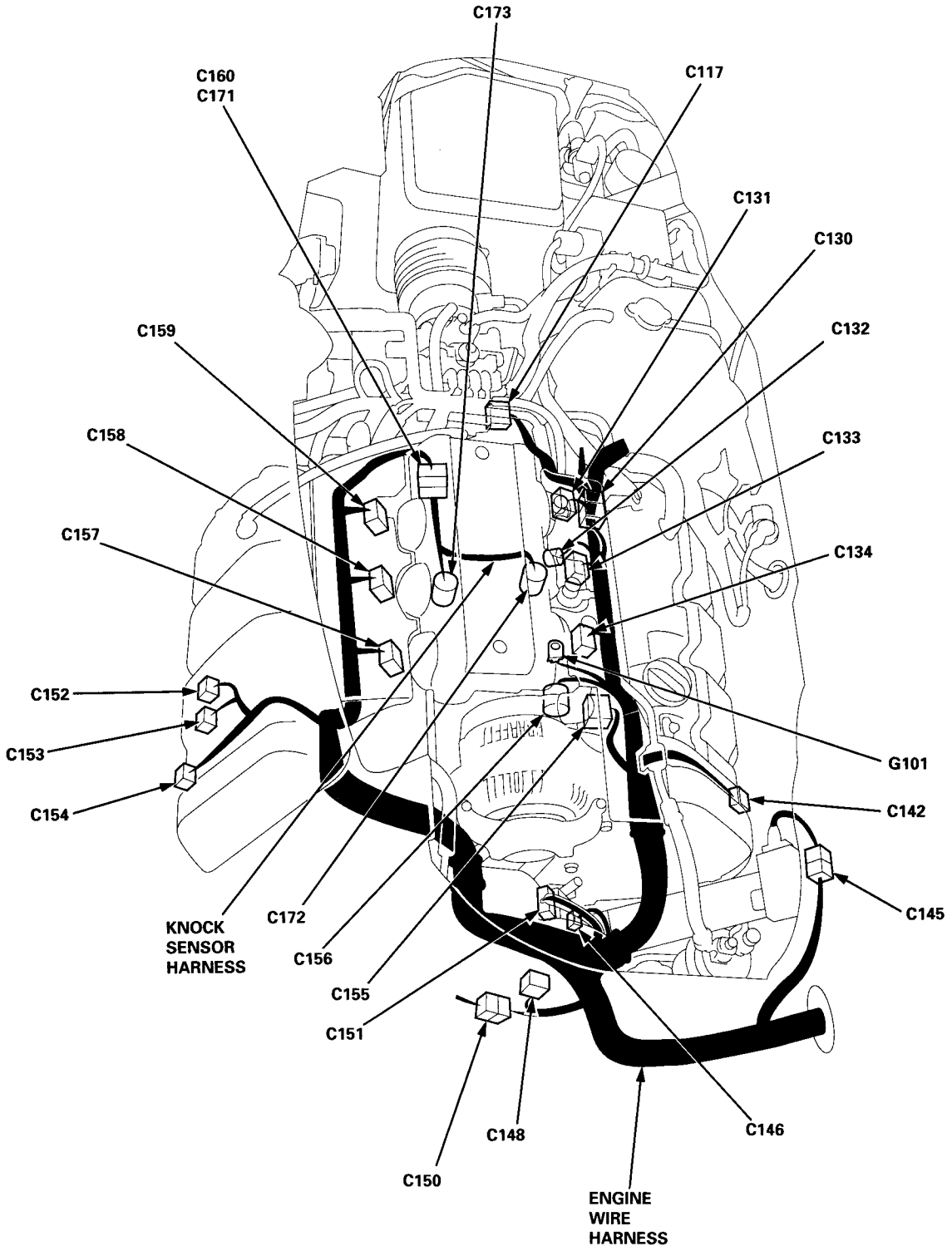

C117

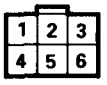

①	PNK
②	BRN_2
③	BLU_2
④	GRN_2
⑤	GRY
⑥	RED_2

C130



①	GRN/BLU
②	WHT/BLK
③	YEL/BLU

C131



①	WHT/BLU
②	RED/BLK

C132



①	GRN/BLU
②	RED/YEL

C133



①	BLK/RED
②	RED/BLK

C134



①	YEL_4
②	RED/BLK

C142



①	BLU/RED
②	GRN/BLU
③	YEL
④	GRN/RED

C145



①	BLK/YEL
②	BLK/RED

C146

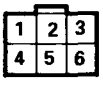

①	GRN_3	④	RED
②	BLU	⑤	WHT_3
③	YEL_1	⑥	BLK

C148



1	——
②	GRN_1

C150

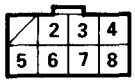

1	——	⑤	YEL/BLK
②	RED/BLK	⑥	RED/BLK
③	RED/BLK	⑦	RED/BLK
④	RED/BLK	⑧	RED/BLK

C151

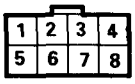

①	BLK	⑤	YEL
②	GRN/BLK	⑥	YEL/RED
③	YEL_2	⑦	GRN/YEL
④	YEL	⑧	BLK

C152



①	GRN/BLU
②	GRN
③	GRY
④	YEL

C153



①	GRN/BLU
②	WHT/RED_2
③	LT GRN
④	YEL

C154



①	WHT_2
②	GRN/BLU
③	YEL
④	ORN/BLK

C155

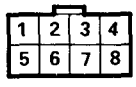

①	BLU/GRN	⑤	ORN_1
②	BLU/YEL	⑥	ORN/BLU_2
③	WHT/BLU_2	⑦	WHT/BLU_1
④	ORN/BLU_1	⑧	WHT

C156



1	WHT/GRN
②	WHT/RED_1
3	YEL
4	WHT/BLU

C157



①	BLU_1
②	RED/BLK

C158



①	RED_1
②	RED/BLK

C159



①	BRN_1
②	RED/BLK

C160

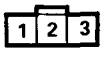

①	WHT_1
②	BRN/BLK
③	RED/BLU

C172



①	WHT_1
2	——

C173



①	RED/BLU
2	——

NOTE: ● Different wires with the same color have been given a number suffix to distinguish them (for example, YEL/BLK_1 and YEL/BLK_2 are not the same).

○: Related to Fuel and Emissions System.

● — Connector with male terminals (double outline): View from terminal side

— Connector with female terminals (single outline): View from wire side

(cont'd)

System Connectors [Engine Compartment (Left Side)] (cont'd)

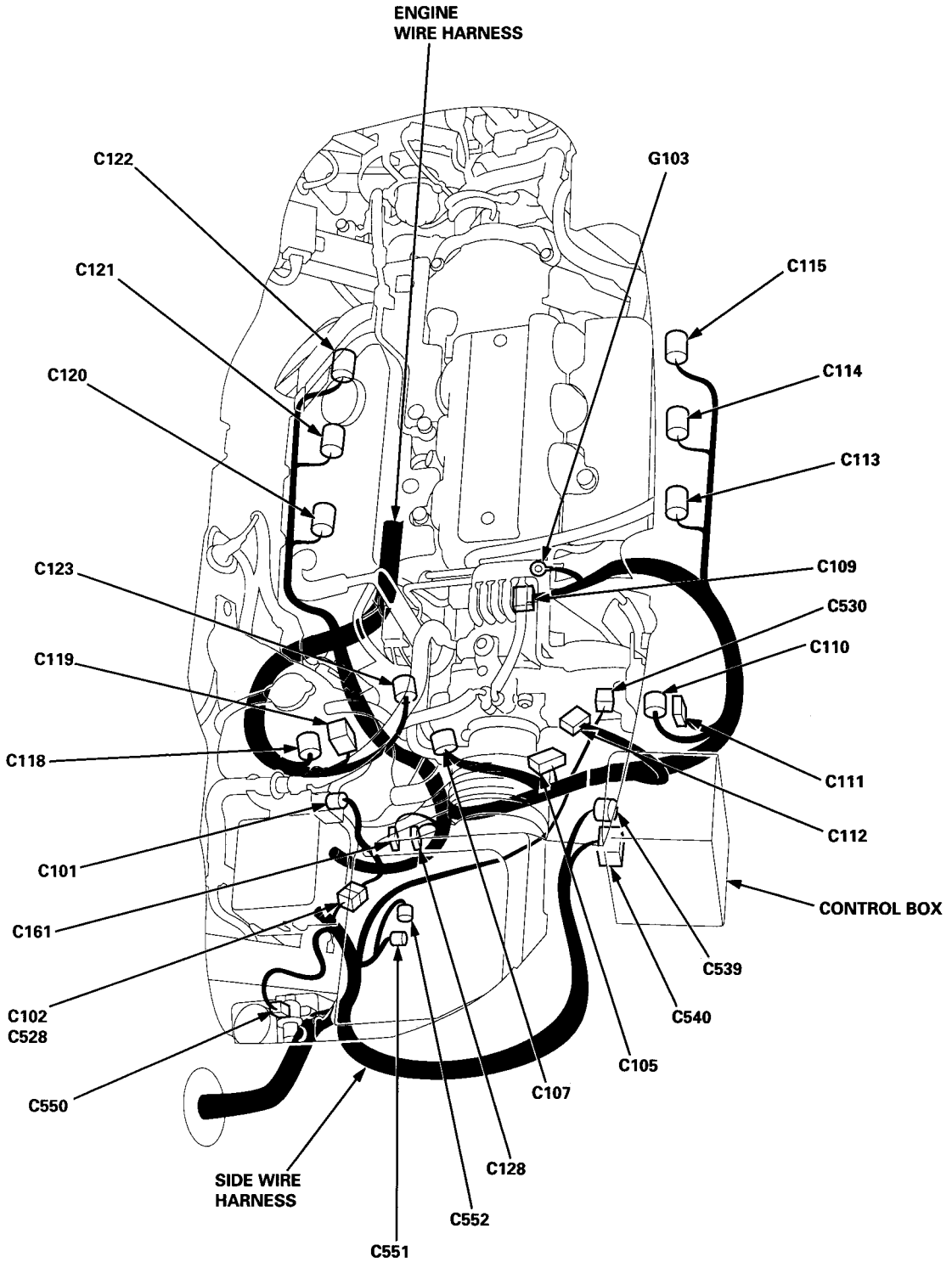

C101



①	RED/YEL
②	BLK/YEL

C102



①	BLK/YEL
②	BLK/WHT

C105

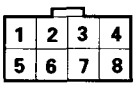

①	BLK/YEL	5	BLK/YEL
②	BLK/YEL	⑥	BLK/YEL
③	BLK/YEL	⑦	BLK/YEL
④	BLK/YEL	⑧	BLK/YEL

C107

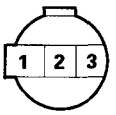

①	GRN/BLU
②	RED/BLK1
③	YEL/BLU

C109

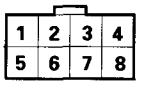

①	WHT/BLK	⑤	WHT/RED
②	BLK	⑥	WHT/YEL
③	WHT/GRN	⑦	BLK
④	WHT2	⑧	WHT/BLU2

C110



①	GRN/BLU
②	BLU/BLK

C111



①	GRN/YEL

C112

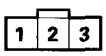

①	BLK
②	YEL
③	ORN

C113

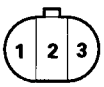

①	BLK/YEL
②	WHT/BLK
③	GRN3

C114

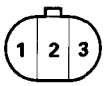

①	BLK/YEL
②	WHT/GRN
③	BLU

C115

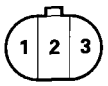

①	BLK/YEL
②	WHT2
③	YEL1

C118



①	GRN/BLU
②	BLU1

C119



1	BLU/YEL

C120

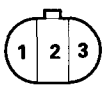

①	BLK/YEL
②	WHT/RED
③	RED

C121

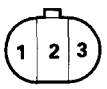

①	BLK/YEL
②	WHT/YEL
③	WHT3

C122

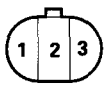

①	BLK/YEL
②	WHT/BLU
③	BLK

C123

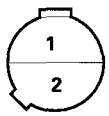

①	GRN/BLU
②	RED/WHT

C128

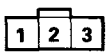

①	BLK2
2	——
③	LT GRN

C161

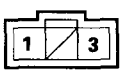

①	BLK1
2	——
③	GRN/WHT3

C530

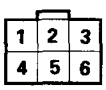

①	BRN
②	ORN2
③	YEL3
④	RED3
⑤	GRN5
⑥	WHT/GRN

C539

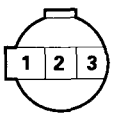

①	YEL/WHT1
②	GRN/WHT1
③	WHT/YEL2

C540

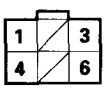

①	YEL
2	——
③	YEL
④	GRN4
5	——
⑥	PNK/BLU

C550



①	YEL
②	ORN/GRN

C551



①	YEL
②	GRN/WHT

C552

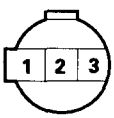

①	YEL/WHT1
②	GRN/WHT1
③	GRN/RED

NOTE: ● Different wires with the same color have been given a number suffix to distinguish them (for example, YEL/BLK1 and YEL/BLK2 are not the same).

○: Related to Fuel and Emissions System.

● — Connector with male terminals (double outline): View from terminal side

— Connector with female terminals (single outline): View from wire side

(cont'd)

System Connectors [Behind the bulkhead panels] (cont'd)

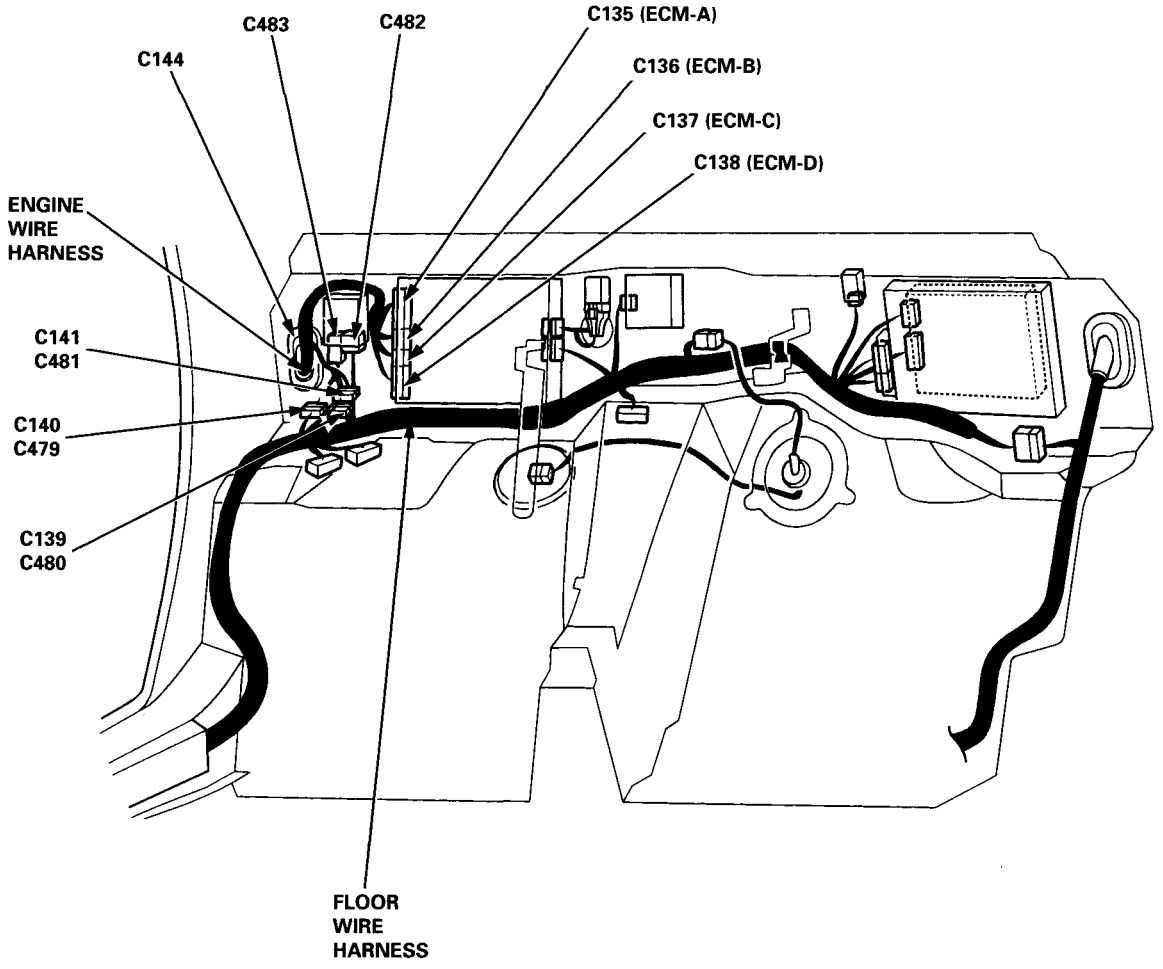

C135 (ECM-A)

1	2	3	4	5	6	7	8	9	10	11	12	13
14	15	16	17			20	21	22	23	24	25	26

①	BRN1	⑭	YEL4
②	RED1	⑮	BLK/RED
③	BLU1	⑯	WHT/BLU
④	BLK/YEL	⑰	ORN3
⑤	GRN/BLK	18	——
⑥	GRN4	19	——
⑦	BLU2	⑳	PNK/BLU
⑧	RED/BLU1	㉑	RED/YEL
⑨	GRY	㉒	GRN/RED
⑩	LT GRN	㉓	ORN/BLK
⑪	PNK	㉔	BRN2
⑫	BLK1	㉕	BLK2
⑬	YEL/BLK	㉖	BRN/BLK

C136 (ECM-B)

1	2	3	4	5	6	7	8
9	10	11	12	13	14	15	16

①	BLU1	⑨	BRN/BLK
②	RED2	⑩	GRY
③	BLU/BLK	⑪	GRN2
④	RED4 LT GRN*	⑫	BLU2
		⑬	ORN/BLU2
⑤	ORN1	⑭	WHT/BLU1
⑥	WHT	⑮	WHT/BLU2
⑦	ORN/BLU1	⑯	BLU/YEL
⑧	BLU/GRN		

*: M/T

C137 (ECM-C)

1	2	3	4	5	6
7	8	9	10	11	12

①	YEL/BLK	⑦	ORN
②	BLU/BLK	⑧	GRN1
③	RED/GRN	⑨	GRN/YEL
④	PNK	⑩	GRN/BLK
⑤	BLU	⑪	YEL/RED
⑥	BLK/WHT	⑫	YEL2

C138 (ECM-D)

1	2		4	5	6	7	8	9	10	11
12	13			16	17	18	19	20		

①	WHT/YEL1	⑫	RED/BLK1
②	RED/BLU	⑬	WHT1
3	——	14	——
④	YEL/GRN	15	——
⑤	WHT/RED1	⑯	GRN
⑥	BLU3	⑰	WHT/RED2
⑦	RED/WHT	⑱	BLU/RED
⑧	RED/YEL	⑲	WHT2
⑨	WHT/YEL2	⑳	WHT/BLK
⑩	YEL/BLU	21	——
⑪	GRN/BLU	22	——

C144

1	2	3	4	5	6	7	8	9	10
11	12	13	14	15	16	17	18	19	20

①	GRN/BLU	⑪	BRN/BLK
②	GRN/BLU	⑫	BRN/BLK
③	GRN/BLU	⑬	BRN/BLK
④	GRN/BLU	⑭	BRN/BLK
⑤	YEL/BLK	⑮	YEL
⑥	YEL/BLK	⑯	YEL
⑦	YEL/BLK	⑰	YEL
⑧	YEL/BLU	⑱	YEL
⑨	YEL/BLU	⑲	YEL
⑩	YEL/BLU	⑳	YEL

C479

1	2	3	4			5	6		8	9
10	11	12	13	14	15	16			18	19	20

1	YEL/BLU	11	WHT/BLU
②	BLK1	⑫	WHT/YEL1
③	BLK/RED	13	WHT/GRN
④	YEL/GRN	⑭	RED/GRN
⑤	YEL/BLK	⑮	BLU2
⑥	YEL	⑯	BLU/BLK
7	——	17	——
⑧	BRN/BLK	⑱	PNK
⑨	RED4	⑲	GRN1
10	BLU/WHT	⑳	RED/WHT

C480

1	2	3	4			5	6	7	8
9		11	12	13	14		16	17	18

①	GRN/BLK	10	——
②	BLK/YEL	11	YEL/GRN
3	YEL/RED	⑫	GRN/YEL
④	PNK/BLU	⑬	BLU/YEL
⑤	GRN/WHT	14	BLU/RED
⑥	ORN/GRN	15	——
⑦	RED/BLK1	⑯	WHT/YEL2
⑧	GRN/WHT3	⑰	GRN4
⑨	BLK/WHT	⑱	GRN/RED

C481

			2	3
4	5	6	7	8

1	——	5	ORN
②	RED/BLU	⑥	BLU
3	BRN/BLK	7	RED
4	YEL/BLK	⑧	BRN/BLK

C482

			2	3
		5		7

1	——	⑤	BLK/YEL
②	GRN/BLK	6	——
③	BLK/WHT	⑦	BLK1
4	——	8	——

C483

1	2
3	4

①	YEL/BLK		
②	BLK/YEL		
③	YEL/BLU		
④	BLK/YEL		

NOTE: ● Different wires with the same color have been given a number suffix to distinguish them (for example, YEL/BLK1 and YEL/BLK2 are not the same).

○: Related to Fuel and Emissions System.

● — Connector with male terminals (double outline): View from terminal side

— Connector with female terminals (single outline): View from wire side

(cont d)

System Connectors [Behind the bulkhead panels] (cont'd)

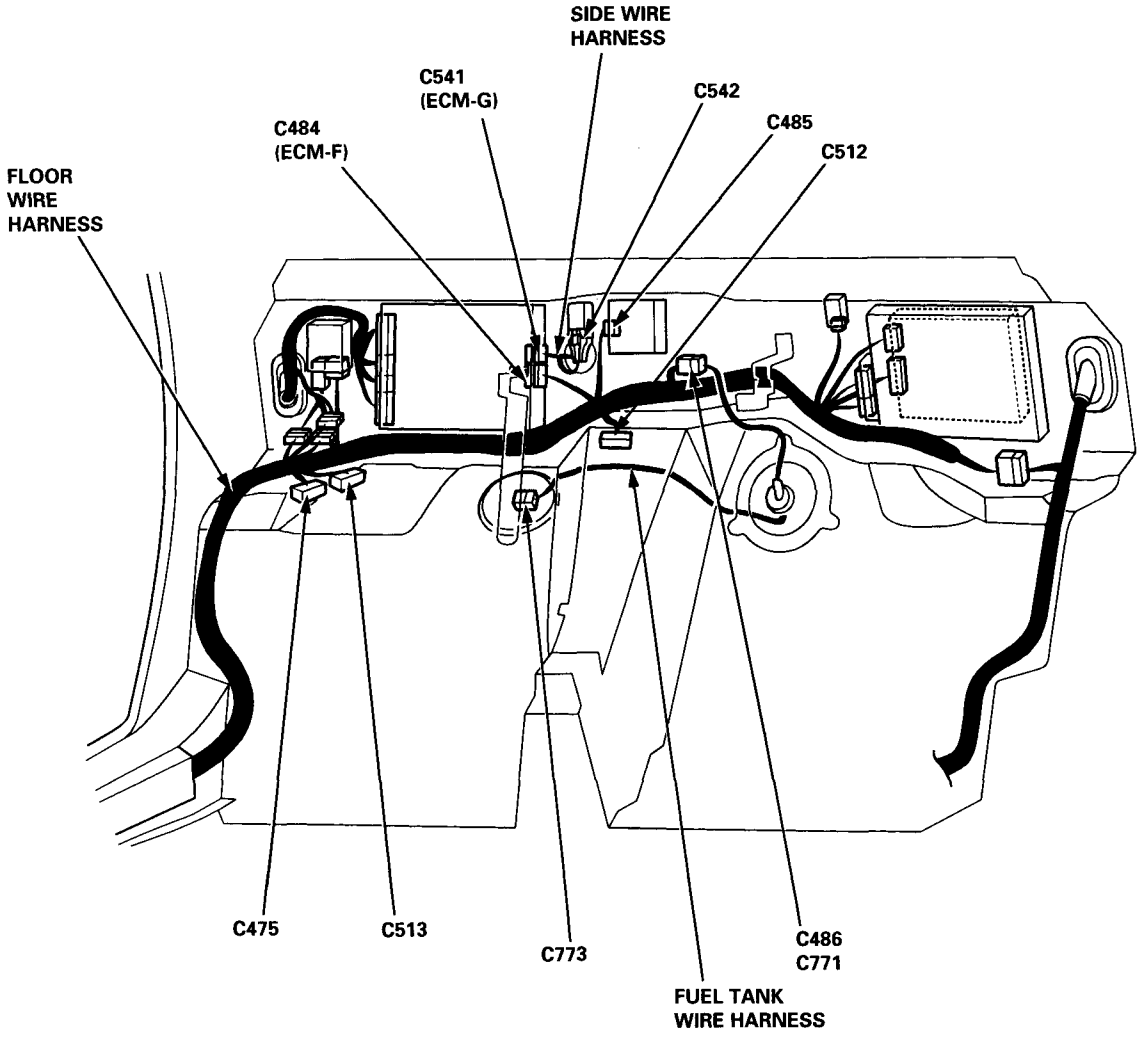

C475

1	2	3	4	5	6	7	8	9	10
11	12	13			16	17			20

1	WHT/YEL	11	BLK
2	WHT/YEL	12	BLK
③	WHT/YEL$_1$	13	BLK
4	WHT/YEL	14	——
5	WHT/YEL	15	——
⑥	WHT/YEL$_1$	⑯	YEL/GRN
⑦	WHT/YEL$_1$	⑰	YEL/GRN
8	WHT/YEL	18	——
⑨	RED/BLU	19	——
10	RED/BLU	⑳	RED/BLU

C484 (ECM-F)

1	2	3	4		6	7	8	9	10	11	12	13
14	15	16	17	18	19	20	21	22		24		

①	YEL/WHT$_1$	⑭	YEL/WHT$_2$
②	GRN/WHT$_1$	⑮	GRN/WHT$_2$
③	BRN$_3$	⑯	GRN/WHT$_3$
④	RED$_6$	⑰	RED/WHT
5	——	⑱	BLU
⑥	GRY	⑲	BLU/YEL
⑦	LT GRN/BLK	⑳	GRN/YEL
⑧	LT GRN/RED	㉑	LT GRN/YEL
⑨	LT GRN	㉒	WHT/YEL
⑩	BLU/ORN	23	——
⑪	BLU/BLK	㉔	RED/BLU
⑫	YEL/RED	25	——
⑬	BLU/RED	26	——

C485

1	2	3	4	5	
7	8	9	10		12

1	BRN/BLK	7	GRN/BLK
2	BLK	8	YEL/BLK
3	BLU/RED	⑨	BLU/BLK
4	GRY/BLK	10	ORN/BLU
5	LT GRN	11	——
6	——	12	GRN

C486

1			2
3		5	6

①	BLK		
2	YEL/BLU		
③	BLK/RED		
4	——		
5	YEL/WHT		
6	BLK		

C512

1	2	3		5	6	7	8	9	10
				15	16	17	18	19	20

1	BRN/BLK	11	——
2	BRN/BLK	12	——
3	BRN/BLK	13	——
4	——	14	——
5	LT GRN/WHT	15	GRN/YEL
6	LT GRN/WHT	16	GRN/YEL
7	LT GRN/WHT	17	GRN/YEL
8	LT BLU	⑱	GRY/WHT
9	LT BLU	19	GRY/WHT
10	LT BLU	⑳	GRY/WHT

C513

1	2	3	4	5	6	7	8	9	10
11	12	13	14	15	16	17	18	19	20

1	BLK	⑪	BLK
2	BLK	⑫	BLK
3	BLK	13	BLK
4	BLK	14	BLK
5	WHT/YEL	15	WHT/BLU
6	WHT/YEL	16	WHT/BLU
7	WHT/YEL	17	WHT/BLU
8	GRN/RED	18	LT GRN/RED
9	GRN/RED	19	LT GRN/RED
10	GRN/RED	20	LT GRN/RED

C541 (ECM-G)

	2			3	4	5
	7	8	9	10	11	12

1	——	⑦	BLK$_1$
②	GRN/RED$_1$	⑧	BLK$_2$
③	GRN/RED$_2$	⑨	ORN$_2$
④	BRN	⑩	GRN$_5$
⑤	WHT/GRN	⑪	YEL$_3$
6	——	⑫	RED$_3$

C542

1	2
3	4

①	GRN/RED$_1$
②	BLK$_2$
③	WHT/BLU$_3$
④	YEL/BLK

C773

1
2

①	BLK
②	BLK/RED

NOTE: ● Different wires with the same color have been given a number suffix to distinguish them (for example, YEL/BLK$_1$ and YEL/BLK$_2$ are not the same).
○: Related to Fuel and Emissions System.
● — Connector with male terminals (double outline): View from terminal side
— Connector with female terminals (single outline): View from wire side (cont'd)

System Connectors [Behind the bulkhead panels] (cont'd)

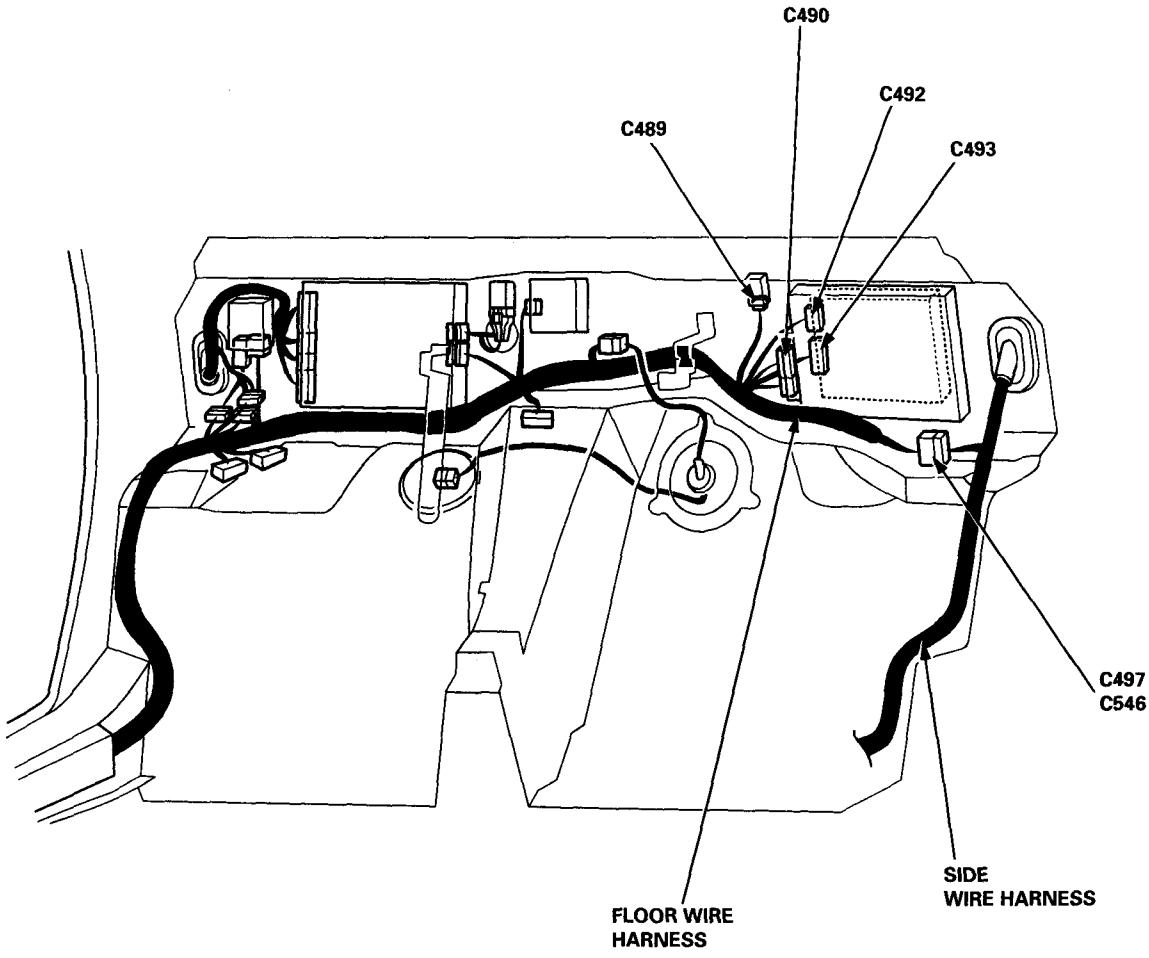

C489



①	BLK/YEL
②	YEL
③	BLK/RED
④	RED6

C490

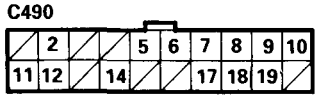

1	———	11	YEL/BLK
2	GRN/RED	12	BRN/BLK
3	———	13	———
4	———	⑭	RED/BLU
⑤	BLK	15	———
6	ORN/BLU	16	———
7	BLU	⑰	GRN1
8	BLK	18	BRN/WHT
9	RED	19	BLK
10	WHT/YEL	20	———

C492

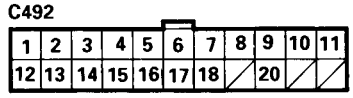

1	GRY	12	GRN/WHT
②	YEL/RED	13	ORN/BLK
③	RED/WHT	14	BLU
④	RED/BLK	15	ORN/WHT
5	ORN	16	PNK/BLK
6	BRN/YEL	17	WHT/BLU
7	BLU/ORN	18	ORN/BLU
8	BLU/YEL	19	———
9	BLU/GRN	⑳	BLU
10	ORN/BLU	21	———
⑪	WHT/YEL2	22	———

C493

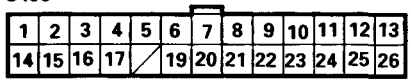

1	BLK/WHT	14	BLK
2	GRN/WHT	15	WHT/BLK
3	BLU/YEL	16	RED/WHT
4	GRY/WHT	17	YEL/BLK
⑤	GRN1	18	———
6	LT GRN/WHT	⑲	LT GRN/YEL
7	GRN/YEL	⑳	WHT/YEL
8	BRN/BLK	21	LT GRN/RED
9	GRN/BLU	22	ORN/BLK
10	RED2	23	WHT/YEL
11	LT BLU	㉔	RED/BLU1
12	YEL	25	YEL
13	BRN/BLK	26	BRN/BLK

C497

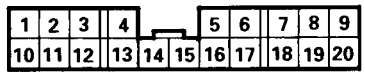

1	GRN/YEL	11	LT GRN
②	GRN4	12	WHT/GRN
3	RED/YEL	13	RED/GRN
4	BLU/GRN	⑭	YEL/WHT1
⑤	YEL/BLK	⑮	WHT/YEL2
⑥	RED	⑯	GRN/WHT1
7	WHT/BLU	⑰	PNK/BLU
8	ORN	18	WHT/GRN
9	LT BLU	19	BLU/GRN
10	BLU/YEL	20	GRY

NOTE: ● Different wires with the same color have been given a number suffix to distinguish them (for example, YEL/BLK1 and YEL/BLK2 are not the same).
○: Related to Fuel and Emissions System.
● — Connector with male terminals (double outline): View from terminal side
— Connector with female terminals (single outline): View from wire side (cont'd)

System Connectors [Front Compartment and Under-dash] (cont'd)

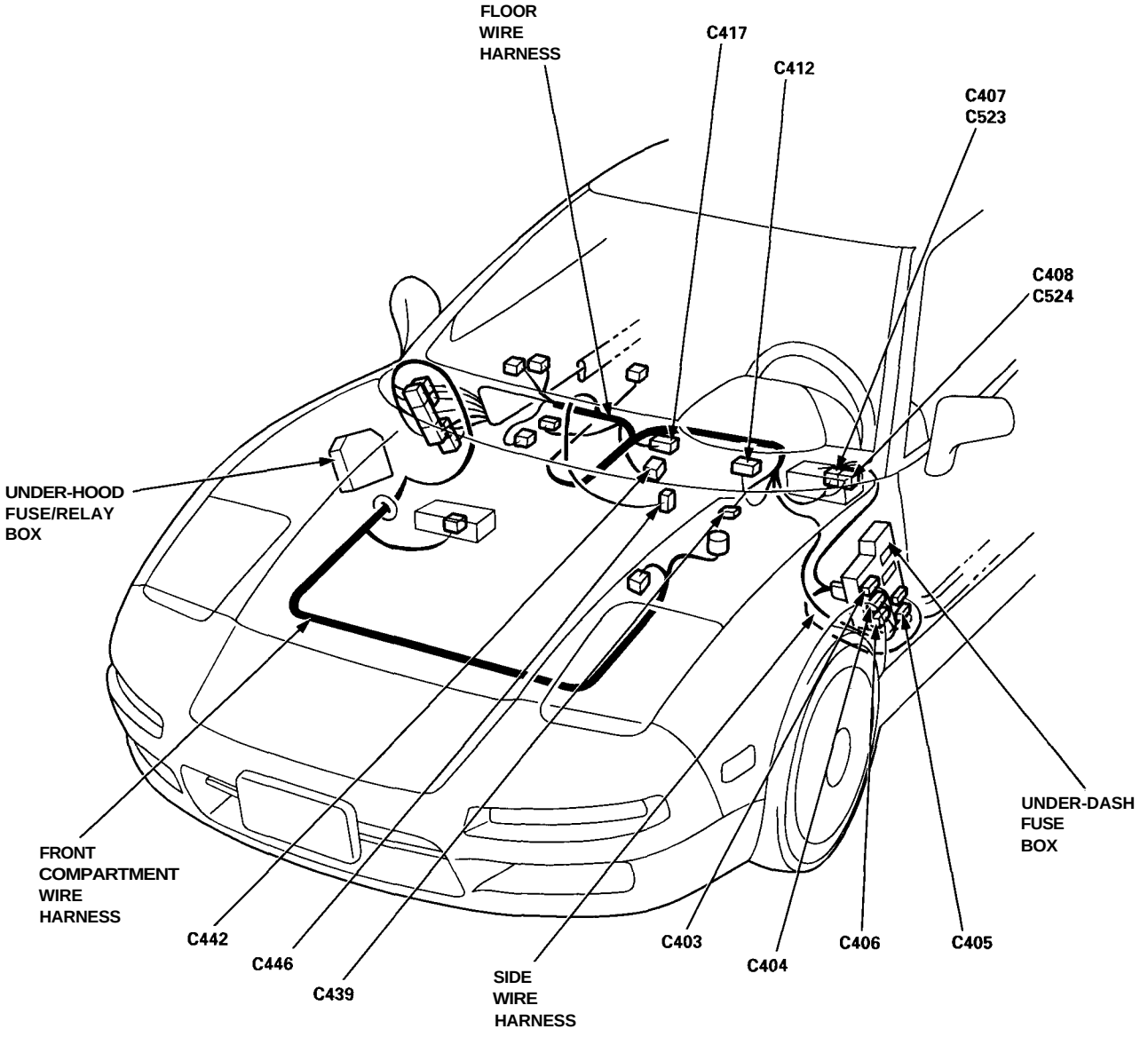

C403

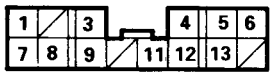

①	YEL	8	GRN/BLU
2	———	9	BLK
3	GRN/YEL	10	———
4	BLK	11	PNK/BLK
5	BLK	12	PNK/BLK
6	BLK	13	PNK/BLK
7	YEL/BLU	14	———

C404

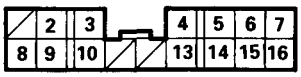

1	———	⑨	YEL
2	YEL/RED	⑩	YEL
3	YEL/GRN	11	———
4	GRN/YEL	12	———
5	BRN/RED	⑬	BLK/WHT
6	WHT/BLU	14	GRN/WHT
7	WHT/BLU	15	YEL/WHT
⑧	YEL	16	BRN/YEL

C405

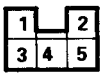

①	WHT
②	BLK/BLU
3	WHT/RED
④	BLU/WHT
⑤	BLK/YEL

C406



1	YEL/BLK	10	YEL/BLK
2	YEL/BLK	11	BLK
3	BLK	12	BLK
4	BLK	13	———
5	RED/BLK	14	GRN/WHT
6	RED/BLK	15	BLK/RED
7	RED/BLK	⑯	BLK/YEL
8	PNK	17	———
9	YEL/BLK	18	GRN/BLU

C407

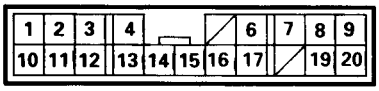

①	WHT/GRN	⑪	YEL
2	PNK/ORN	12	GRN/BLK
3	WHT	13	BRN/WHT
4	GRN/WHT	14	ORN/WHT
5	———	15	PNK/WHT
6	WHT/BLK	16	RED/BLU
7	BLU	17	BLK/WHT
8	BLK	18	———
9	RED/YEL	19	BRN/YEL
10	RED/BLK	20	YEL/BLU

C408



1	WHT/BLK
②	BLK/YEL

C412



1	BLU/BLK	⑯	BLU_2
②	YEL	17	GRN
3	YEL/GRN	18	BLK
4	RED	19	BLU/ORN
5	RED/BLK	20	YEL/GRN
6	BRN/YEL	㉑	RED_4
7	GRN/WHT	㉒	GRY/WHT
8	GRN/YEL	23	LT BLU
9	LT GRN/WHT	㉔	GRN_6
10	GRN/WHT	25	BRN/GRN
11	GRN/BLK	26	———
12	BLU	27	GRN/WHT
13	RED/YEL	28	BLK/WHT
14	RED/YEL	29	GRN/BLU
15	YEL/RED	30	GRN/RED

C417

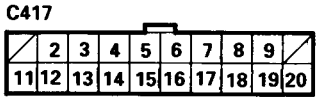

1	———	11	BLK
2	RED	12	BLK
3	RED	13	BLK
4	RED	14	BLK/GRN
5	RED	15	BLK/GRN
6	RED	16	BLK/GRN
7	RED/BLK	⑰	GRN
8	RED/BLK	18	GRN
9	RED/BLK	⑲	GRN
10	———	⑳	GRN

C439

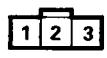

①	PNK
2	BLU/ORN
③	BLK

C442



1	GRY
②	WHT/GRN
③	GRN/WHT_3
4	LT GRN

C446

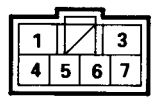

①	WHT/RED_3
2	———
③	BLK/YEL
④	BLK/WHT
5	WHT/RED
6	WHT/BLK
7	RED/WHT

NOTE: ● Different wires with the same color have been given a number suffix to distinguish them (for example, YEU/BLK_1 and YEL/BLK_2 are not the same).
○: Related to Fuel and Emissions System.
● — Connector with male terminals (double outline): View from terminal side
— Connector with female terminals (single outline): View from wire side (cont'd)

System Connectors [Front Compartment and Under-dash] (cont'd)

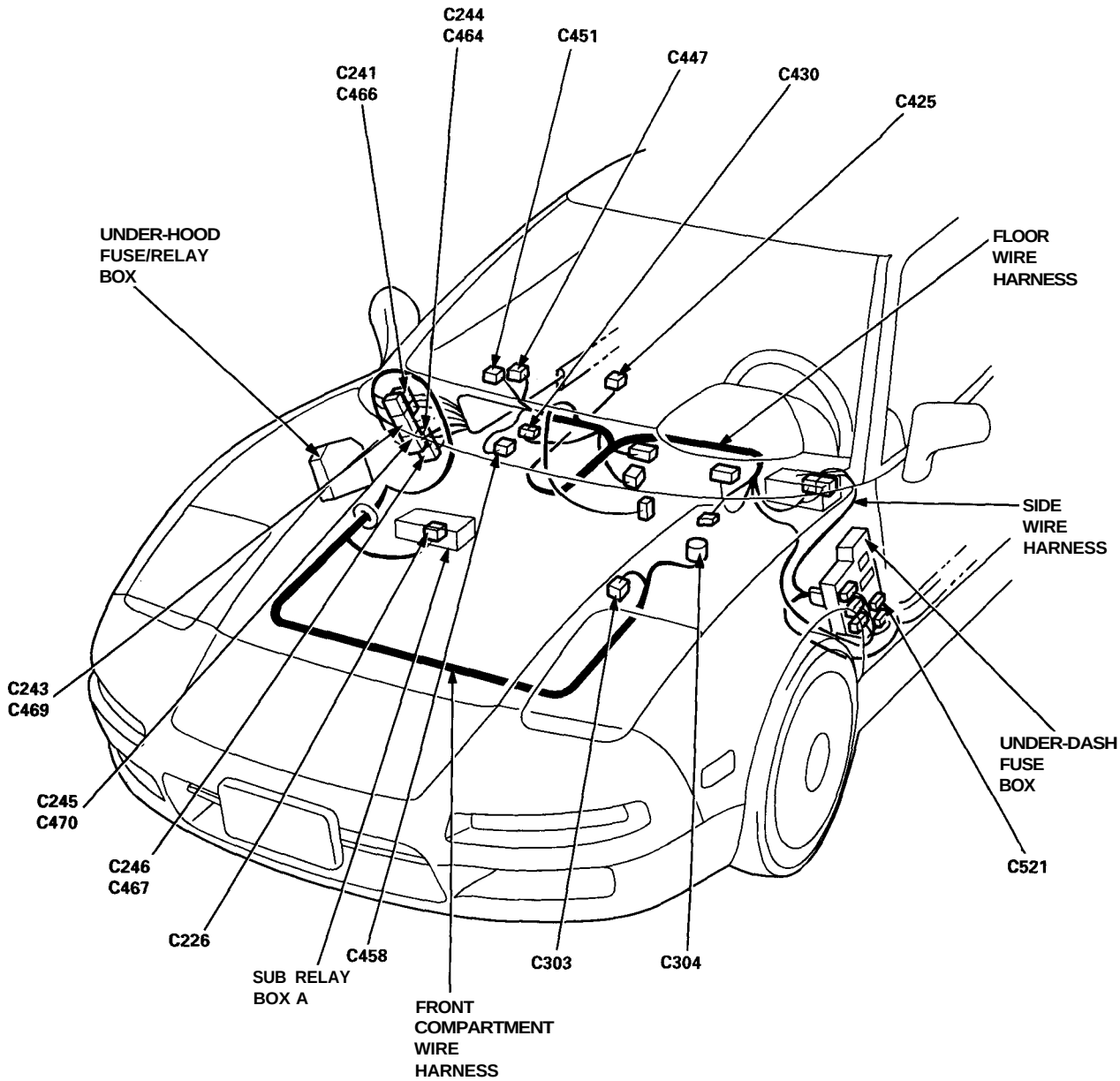

C226



1	PNK/ORN
2	YEL/BLK
3	RED
④	RED/BLU1

C303

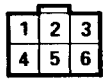

①	BLU/RED
②	YEL/WHT2
③	GRN/WHT2
④	YEL/WHT1
⑤	GRN/WHT1
⑥	YEL/RED

C304

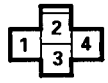

①	RED/GRN
2	BRN/BLK
3	BLK
④	BLK

C425

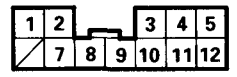

1	BLU/GRN	⑦	GRY/WHT
2	LT GRN/WHT	8	YEL
3	GRN/YEL	9	GRN/BLK
4	BRN/BLK	10	BLK
5	GRN/BLU	11	LT BLU
6	———	⑫	GRN6

C430



1	———	9	———
2	———	10	———
3	———	11	———
4	———	⑫	BLK
5	———	⑬	BRN/BLK
6	———	14	———
7	———	⑮	YEL/GRN
⑧	WHT/YEL1	16	———

C447

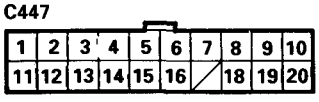

1	RED	11	BLK
2	RED	⑫	BLK
3	RED	⑬	BLK
4	RED	14	WHT/BLU
5	RED	15	WHT/BLU
6	RED	16	WHT/BLU
⑦	WHT/GRN	17	———
⑧	WHT/GRN	⑱	WHT/YEL
9	WHT/GRN	⑲	WHT/YEL
10	WHT/GRN	⑳	WHT/YEL

C451

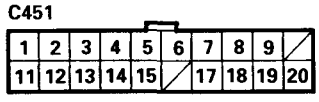

1	RED/BLK	11	BLK
2	RED/BLK	⑫	BLK
3	RED/BLK	⑬	BLK
4	RED/BLK	14	GRN/YEL
5	RED/BLK	15	GRN/YEL
6	RED/BLK	16	———
7	ORN	17	GRN/RED
8	ORN	18	GRN/RED
9	ORN	19	GRN/RED
10	———	20	GRN/RED

C458



①	BRN/BLK
②	BLU

C464

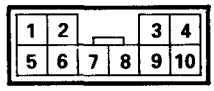

1	BLU/WHT	6	GRN/RED
2	YEL/BLK	7	BLU/BLK
③	BLU/RED	8	PNK/BLK
④	YEL/RED	9	LT GRN/BLK
⑤	RED/GRN	10	ORN

C466

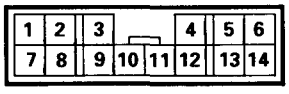

1	LT GRN/YEL	8	YEL/GRN
2	RED/BLU	9	WHT/YEL
3	GRN/WHT	10	BLU/RED
④	WHT/GRN	11	LT GRN/WHT
5	BLU/GRN	12	YEL/GRN
6	LT GRN/RED	13	RED/GRN
⑦	YEL/WHT2	14	PNK/WHT

C467

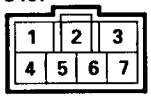

①	WHT/RED
2	BLK
3	YEL/GRN
4	YEL/RED
5	YEL/BLU
6	BLU/WHT
7	BLK/YEL

C469

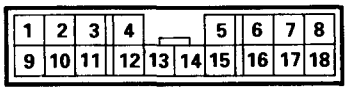

①	RED/BLU	10	ORN/BLK
2	BLK	11	ORN/RED
3	BRN/BLK	12	LT BLU
4	RED	13	GRY
⑤	GRN/WHT2	14	GRN/WHT
⑥	GRN/WHT3	15	GRN/BLU
7	YEL/WHT	16	GRN/BLK
8	RED/WHT	17	BLU/RED
9	ORN	18	GRY/WHT

C470

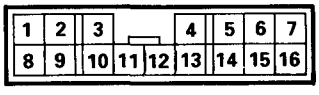

①	GRN/WHT1	9	BLK
2	YEL	⑩	WHT/YEL1
3	PNK/WHT	11	YEL/BLK
4	PNK/BLU	12	WHT/BLU
5	BLK/YEL	13	BLU
6	BLU/RED	14	BLU/BLK
7	BLU/WHT	15	GRN/YEL
⑧	YEL/WHT1	16	BLU/YEL

C521



①	BLK/YEL
2	BLK/WHT

NOTE: ● Different wires with the same color have been given a number suffix to distinguish them (for example, YEU/BLK1 and YEU/BLK2 are not the same).
○: Related to Fuel and Emissions System.
● — Connector with male terminals (double outline): View from terminal side
— Connector with female terminals (single outline): View from wire side

Troubleshooting Procedures

I. How To Begin Troubleshooting

When the Malfunction Indicator Lamp (MIL) has been reported on, or there is a driveability problem, use the appropriate procedure below to diagnose and repair the problem.

A. When the MIL has come on:

1. Connect the Honda PGM Tester or an OBD II scan tool to the 16P Data Link Connector (DLC) located under the glove box behind a removable cover.
2. Turn the ignition switch ON (II).
3. Check the DTC and note it. Also check and note the freeze frame data. Refer to the Diagnostic Trouble Code Chart and begin troubleshooting.

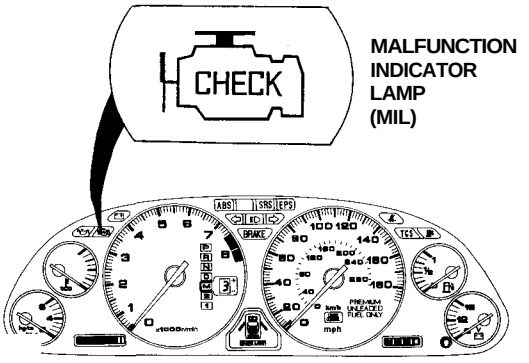

MALFUNCTION INDICATOR LAMP (MIL)

NOTE:

- See the OBD II scan tool or Honda PGM Tester user's manuals for specific operating instructions.
- The scan tool or tester can read the Diagnostic Trouble Codes (DTC), freeze frame data, current data, and other Engine Control Module (ECM) data.
- Freeze frame data indicates the engine conditions when the first malfunction, misfire or fuel trim malfunction was detected. It can be useful information when troubleshooting.

B. When the MIL has not come on, but there is a driveability problem, refer to the Symptom Chart on page 11-42.

C. DTCs will be indicated by the blinking of the Malfunction Indicator Lamp (MIL) with the SCS service connector connected.

Connect the SCS service connector to Service Check Connector as shown. (The 2P Service Check Connector is located under the dash on the passenger's side of the vehicle.) Turn the ignition switch on (II).

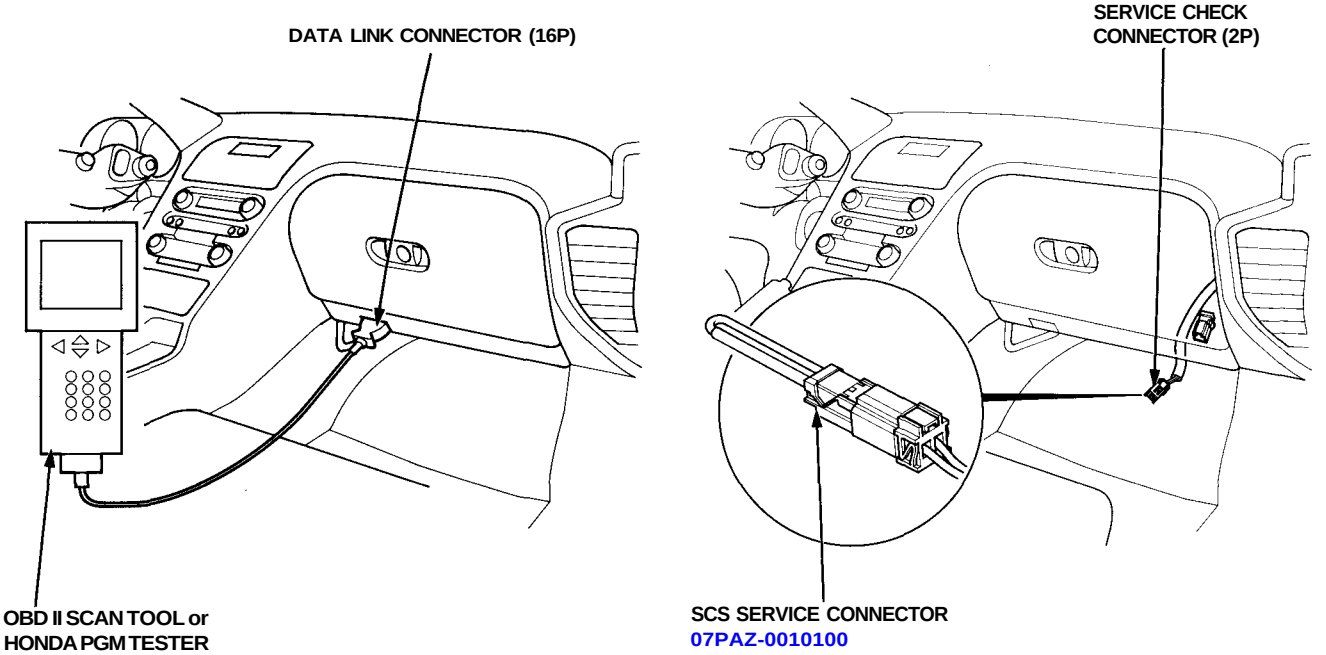

II. Engine Control Module (ECM) Reset Procedure

Either of the following actions, will reset the ECM.

- Using the OBD II scan tool or Honda PGM Tester to clear the ECM's memory.

  NOTE: See the OBD II scan tool or Honda PGM Tester user's manuals for specific operating instructions.

- Turn the ignition switch OFF. Remove the CLOCK (7.5 A) fuse from the under-hood fuse/relay box for 10 seconds.

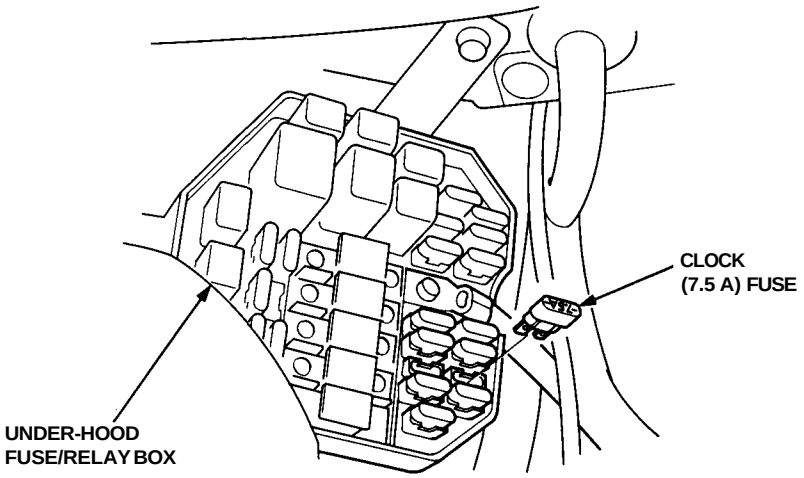

III. Final Procedure (this procedure must be done after any troubleshooting)

1. Remove the SCS Service Connector if it is connected. If the SCS service connector is connected and there are no DTCs stored in the ECM, the MIL will stay on when the ignition switch is turned on.
2. Do the ECM Reset Procedure.
3. Turn the ignition switch OFF.
4. Disconnect the OBD II scan tool or Honda PGM Tester from the Data Link Connector (16P).

IV. Known-Good ECM Substitution

The ECM is part of the immobilizer system. If you substitute a known-good ECM, the ECM will have a different immobilizer code. In order for the engine to start, you must rewrite the immobilizer code with the Honda PGM Tester.

(cont'd)

Troubleshooting Procedures (cont'd)

If the inspection for a particular code requires voltage or resistance checks at the ECM connectors, remove the bulkhead panels. Unbolt the ECM. Check the system according to the procedure described for the appropriate code(s) listed on the following pages.

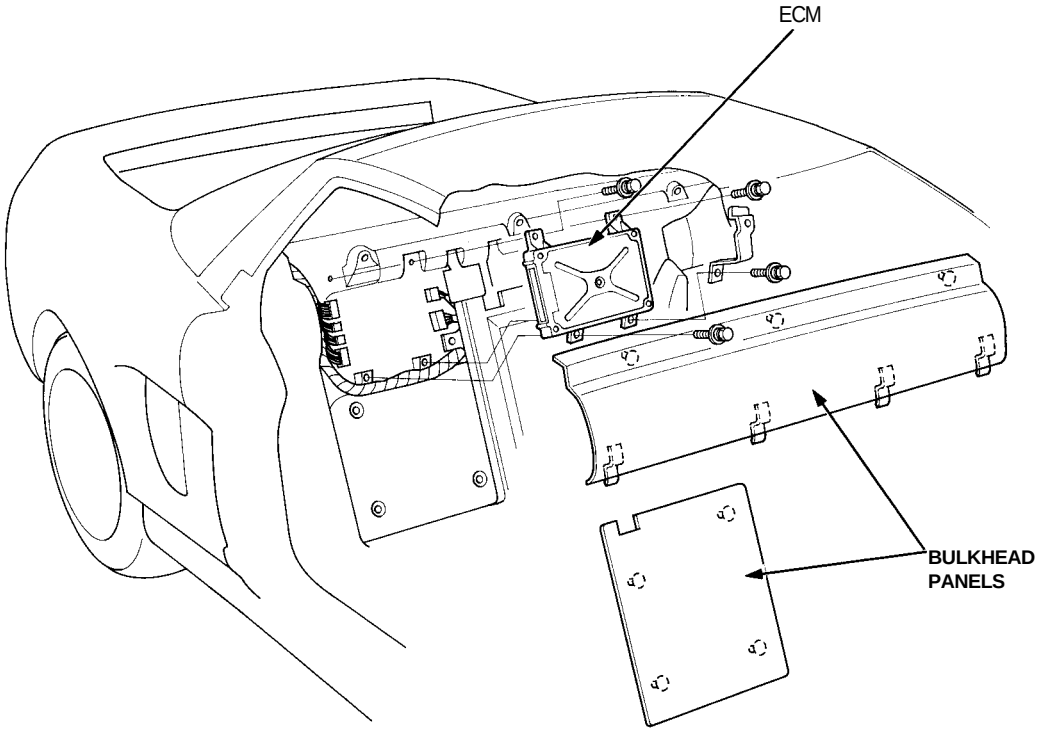

How to Use the Backprobe Sets

Connect the backprobe adapters to the stacking patch cords, and connect the cords to a multimeter. Using the wire insulation as a guide for the contoured tip of the backprobe adapter, gently slide the tip into the connector from the wire side until it comes in contact with terminal end of the wire.

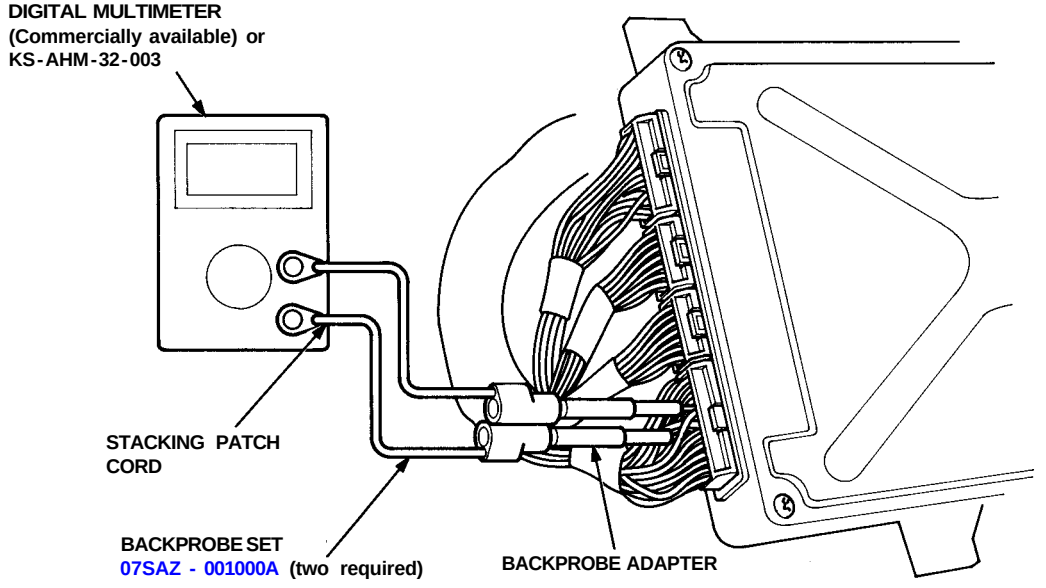

CAUTION:

- **Puncturing the insulation on a wire can cause poor or intermittent electrical connections.**
- **Bring the tester probe into contact with the terminal from the connector side of wire harness connectors in the engine compartment. For female connectors, just touch lightly with the tester probe and do not insert the probe.**

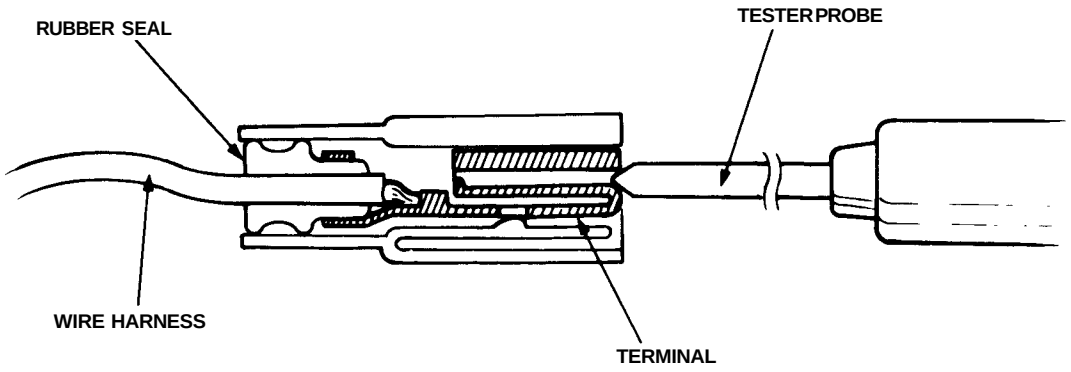

(cont'd)

Troubleshooting Procedures (cont'd)

Symptom Chart

Listed below are symptoms and probable causes for problems that DO NOT cause the Malfunction Indicator Lamp (MIL) to come on.

If the MIL was reported on, go to page 11-38.

Troubleshoot each probable cause in the order listed (from left to right) until the symptom is eliminated.

The probable cause and troubleshooting page reference can be found on next page.

SYMPTOM	PROBABLE CAUSE
Engine will not start	4,2,3,5,19,13,1
Hard starting	2,4,10,12,18
Cold fast idle too low	7,6
Cold fast idle too high	7,9,8
Idle speed fluctuates	7,9,8
Misfire or rough running	Troubleshoot for misfire on pages 11-90, 11-94
Low power	2,8,9, 11,16, 15,17,10
Engine stalls	2,4,10,19,7,5,14

Other Probable Causes:

Engine will not start

— Compression
— Engine locked up
— Timing belt
— Starting system
— Overheating
— Battery

Probable Cause List (For the DTC chart, see page 11-52.)

Probable Cause	Page	System
1	11-61, 11-62	Engine Control Module (ECM)
2	11-132, 11-139	Fuel pressure and fuel pump relay
3	11-143	PGM-FI main relay
4	Section 23	Ignition system
5	See DTC chart	Crankshaft Position/Cylinder Position sensor circuit
6	See DTC chart	Intake Air Temperature (IAT) sensor circuit
7	11-128	Idle speed adjustment
8	11-151	Throttle body
9	11-150	Throttle cable
10	See DTC chart	Manifold Absolute Pressure (MAP) sensor
11	See DTC chart	Throttle Position (TP) sensor
12	See DTC chart	Barometric pressure (BARO) sensor
13	11-122, 11-125	A/T gear position signal or clutch switch signal
14	11-127	Brake switch signal
15	11-149	Air Cleaner
16	11-154	Intake Air Bypass (IAB) control system and intake air pipe
17	11-159	Three Way Catalytic Converter (TWC)
18	11-167	Evaporative emission (EVAP) control
19	———	Contaminated fuel

(cont'd)

Troubleshooting Procedures (cont'd)

ECM Data

By connecting the OBD II scan tool or the Honda PGM Tester to the 16P data link connector (DLC), various data can be retrieved from the ECM. The items listed in the table below conform to the SAE recommended practice.
The Honda PGM Tester also reads data beyond that recommended by SAE.
Understanding this data will help to find the causes of intermittent failures or engine problems.

NOTE:

- The "operating values" given below are approximate values and may be different depending on the environment and the individual vehicle.
- Unless noted otherwise, "at idle speed" means idling with the engine completely warmed up, A/T in [P] or [N] position, M/T in neutral, and the A/C and all accessories turned off.

Data	Description	Operating Value	Freeze Data
Diagnostic Trouble Code (DTC)	If the ECM detects a problem, it will store it as a code consisting of one letter and four numbers. Depending on the problem, an SAE-defined code (POxxx) or a Honda-defined code (P1xxx) will be output to the tester.	If no problem is detected, there is no output.	YES
Engine Speed	The ECM computes engine speed from the signals sent from the Crankshaft Position sensor. This data is used for determining the time and amount of fuel injection.	Nearly the same as tachometer indication at idle speed: A/T: 780 ± 50 rpm M/T: 800 ± 50 rpm	YES
Vehicle Speed	The ECM converts pulse signals from the Vehicle Speed Sensor (VSS) into speed data.	Nearly the same as speedometer indication	YES
Manifold Absolute Pressure (MAP)	The absolute pressure created in the intake manifold by engine load and speed.	With engine stopped: Nearly the same as atmospheric pressure at idle speed: 24-37kPa(180-280 mmHg, 7.1-11.0 inHg)	YES
Engine Coolant Temperature (ECT)	The ECT sensor converts coolant temperature into voltage and signals the ECM. The sensor is a thermistor whose internal resistance changes with coolant temperature. The ECM uses the voltage signals from the ECT sensor to determine the amount of injected fuel.	With cold engine: Same as ambient temperature and IAT With engine warmed up: approx. 176-194°F (80 - 90°C)	YES
Heated Oxygen Sensor (HO2S) (Bank 1, Sensor 1) (Bank 1, Sensor 2) (Bank 2, Sensor 1) (Bank 2, Sensor 2)	The Heated Oxygen Sensor detects the oxygen content in the exhaust gas and sends voltage signals to the ECM. Based on these signals, the ECM controls the air/fuel ratio. When the oxygen content is high (that is, when the ratio is leaner than the stoichiometric ratio), the voltage signal is lower. When the oxygen content is low (that is, when the ratio is richer than the stoichiometric ratio), the voltage signal is higher.	0.0-1.25V At idle speed: about 0.1-0.9V	NO

Data	Description	Operating Value	Freeze Data
HO2S Feedback Loop Status (Bank 1: Rear) (Bank 2: Front)	Loop status is indicated as "open" or "closed". Closed: Based on the H02S output, the ECM determines the air/fuel ratio and controls the amount of injected fuel. Open: Ignoring H02S output, the ECM refers to signals from the TP, MAP, and ECT sensors to control the amount of injected fuel.	At idle speed: closed	YES
Short Term Fuel Trim (Bank 1: Rear) (Bank 2: Front)	The air/fuel ratio correction coefficient for correcting the amount of injected fuel when HO2S feedback is in the closed loop status. When the signal from the HO2S is weak, short term fuel trim gets higher, and the ECM increases the amount of injected fuel. The air/fuel ratio gradually gets richer, causing a higher H02S output. Consequently, the short term fuel trim is lowered, and the ECM reduces the amount of injected fuel. This cycle keeps the air/fuel ratio close to the stoichiometric ratio when in closed loop status.	-30%-+43%	YES
Long Term Fuel Trim (Bank 1: Rear) (Bank 2: Front)	Long term fuel trim in computed from short term fuel trim and indicates changes occuring in the fuel supply system over a long period. If long term fuel trim is higher than 1.00, the amount of injected fuel must be increased. If it is lower than 1.00, the amount of injected fuel must be reduced.	-19%-+25%	YES
Intake Air Temperature (IAT)	The IAT sensor converts intake air temperature into voltage and signals the ECM. When intake air temperature is low, the internal resistance of the sensor increases, and the voltage signal is higher.	With cold engine: Same as ambient temperature and ECT	YES
Throttle Position	Based on the accelerator pedal position, the opening angle of the throttle valve is indicated.	At idle: Approx. 10% At full throttle: Approx. 90%	YES
Ignition Timing	The ignition advance angle is set by the ECM. The ECM matches ignition timing to the driving conditions.	At idle speed: 15 ±2° BTDC with the SCS service connector connected.	NO
Calculated Load Value (CLV)	CLV is the engine load calculated from the MAP data.	At idle speed: 15-35% At 2,500 rpm with no load: 12-30%	YES

Troubleshooting

Engine Control Module Terminal Arrangement

ECM CONNECTOR A (26P)

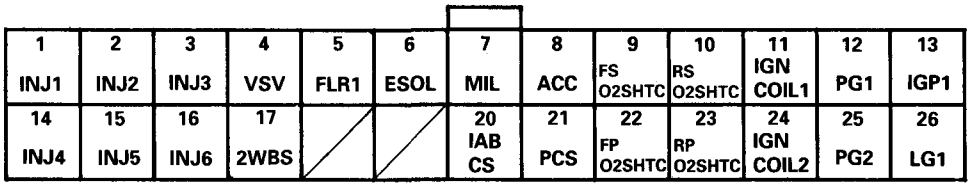

Wire side of female terminals

ECM CONNECTOR A (26P)

NOTE: Standard battery voltage is 12 V.

Terminal number	Wire color	Terminal name	Description	Signal
1	BRN	INJ1 (No. 1 FUEL INJECTOR)	Drives No. 1 fuel injector	With engine running: pulses
2	RED	INJ2 (No. 2 FUEL INJECTOR)	Drives No. 2 fuel injector	
3	BLU	INJ3 (No. 3 FUEL INJECTOR)	Drives No. 3 fuel injector	
4	BLK/YEL	VSV (EVAP CONTROL CANISTER VENT SHUT VALVE)	Drives EVAP control canister vent shut valve	With ignition switch ON (II): battery voltage
5	GRN/BLK	FLR1 (FUEL PUMP RELAY)	Drives fuel pump relay	0 V for two seconds after turning ignition switch ON (II), then battery voltage
6	GRN	ESOL (EGR CONTROL SOLENOID VALVE)	Drives EGR control solenoid valve	With EGR operating during driving with fully warmed up engine: duty controlled With EGR not operating: battery voltage
7	BLU	MIL (MALFUNCTION INDICATOR LAMP)	Drives MIL	With MIL turned ON: 0 V With MIL turned OFF: battery voltage
8	RED/BLU	ACC (A/C CLUTCH RELAY)	Drives A/C clutch relay	With compressor ON: 0 V With compressor OFF: battery voltage
9	GRY	FS02SHTC (FRONT SECONDARY HEATED OXYGEN SENSOR HEATER CONTROL)	Drives front secondary heated oxygen sensor heater	With ignition switch ON (II): battery voltage With fully warmed up engine running: 0 V
10	LTGRN	RS02SHTC (REAR SECONDARY HEATED OXYGEN SENSOR HEATER CONTROL)	Drives rear secondary heated oxygen sensor heater	With ignition switch ON: battery voltage With fully warmed up engine running: pulses
11	PNK	IGN COIL1 (No. 1 IGNITION COIL part of IGNITION CONTROL MODULE)	Sends ignition pulse	With ignition switch ON (II): 0 V With engine running: pulses
12	BLK	PG1 (POWER GROUND)	Ground for the ECM power circuit	Less than 1.0 V at all times
13	YEL/BLK	IGP1 (POWER SOURCE)	Power source for the ECM control circuit	With ignition switch ON (II): battery voltage With ignition switch OFF: 0 V
14	YEL	INJ4 (No. 4 FUEL INJECTOR)	Drives No. 4 fuel injector	With engine running: pulses
15	BLK/RED	INJ5 (No. 5 FUEL INJECTOR)	Drives No. 5 fuel injector	
16	WHT/BLU	INJ6 (No. 6 FUEL INJECTOR)	Drives No. 6 fuel injector	
17	ORN	2WBS (EVAP BYPASS SOLENOID VALVE)	Drives EVAP bypass solenoid valve	With ignition switch ON (II): battery voltage
20	PNK/BLU	IABCS (IAB CONTROL SOLENOID VALVE)	Drives IAB control solenoid valve	With engine speed below 4,800 rpm: battery voltage With engine speed above 4,800 rpm: 0 V
21	RED/YEL	PCS (EVAP PURGE CONTROL SOLENOID VALVE)	Drives EVAP purge control solenoid valve	With engine running, engine coolant below 153°F (67°C): battery voltage With engine running, engine coolant above 153°F (67°C): 0 V
22	GRN/RED	FP02SHTC (FRONT PRIMARY HEATED OXYGEN SENSOR HEATER CONTROL)	Drives front primary heated oxygen sensor heater	With ignition switch ON (II): battery voltage With fully warmed up engine running: 0 V
23	ORN/BLK	RP02SHTC (REAR PRIMARY HEATED OXYGEN SENSOR HEATER CONTROL)	Drives rear primary heated oxygen sensor heater	With ignition switch ON (II): battery voltage With fully warmed up engine running: 0 V
24	BRN	IGN COIL2 (No. 2 IGNITION COIL part of IGNITION CONTROL MODULE)	Sends ignition pulse	With ignition switch ON (II): 0 V With engine running: pulses
25	BLK	PG2 (POWER GROUND)	Ground for the ECM power circuit	Less than 1.0 V at all times
26	BRN/BLK	LG1 (LOGIC GROUND)	Ground for the ECM control circuit	Less than 1.0 V at all times

ECM CONNECTOR B (16P)

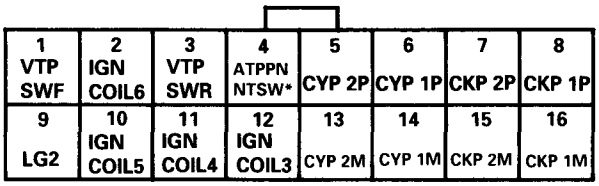

Wire side of female terminals

ECM CONNECTOR B (16P)

NOTE: Standard battery voltage is 12 V.
*: M/T

Terminal number	Wire color	Terminal name	Description	Signal
1	BLU	VTP SWF (FRONT VTEC PRESSURE SWITCH)	Detects VTEC pressure switch signal	With engine at low rpm: 0 V With engine at high rpm: battery voltage
2	RED	IGN COIL6 (No. 6 IGNITION COIL part of IGNITION CONTROL MODULE)	Sends ignition pulse	With ignition switch ON (II): 0 V With engine running: pulses
3	BLU/BLK	VTP SWR (REAR VTEC PRESSURE SWITCH)	Detects VTEC pressure switch signal	With engine at low rpm: 0 V With engine at high rpm: battery voltage
4	RED	ATP PN (A/T GEAR POSITION SWITCH)	Detects A/T gear position switch signal	In [N] or [P] position: 0 V In any other position: approx. 5 V
4*	LTGRN	NT SW (NEUTRAL SWITCH)	Detects neutral switch signal	In neutral position: 0 V In any other position: approx. 5 V
5	ORN	CYP 2P (CYP SENSOR 2 P SIDE)	Detects CYP sensor 2	With engine running: pulses
6	WHT	CYP 1P (CYP SENSOR 1 P SIDE)	Detects CYP sensor 1	With engine running: pulses
7	ORN/BLU	CKP 2P (CKP SENSOR 2 P SIDE)	Detects CKP sensor 2	With engine running: pulses
8	BLU/GRN	CKP 1P (CKP SENSOR 1 P SIDE)	Detects CKP sensor 1	With engine running: pulses
9	BRN/BLK	LG2 (LOGIC GROUND)	Ground for the ECM control circuit	Less than 1.0 V at all times
10	GRY	IGN COIL5 (No. 5 IGNITION COIL part of IGNITION CONTROL MODULE)	Sends ignition pulse	With ignition switch ON (II): 0 V With engine running: pulses
11	GRN	IGN COIL4 (No. 4 IGNITION COIL part of IGNITION CONTROL MODULE)	Sends ignition pulse	With ignition switch ON (II): 0 V With engine running: pulses
12	BLU	IGN COILS (No. 3 IGNITION COIL part of IGNITION CONTROL MODULE)	Sends ignition pulse	With ignition switch ON (II): 0 V With engine running: pulses
13	ORN/BLU	CYP 2M (CYP SENSOR 2 M SIDE)	Ground for CYP sensor 2	
14	WHT/BLU	CYP 1M (CYP SENSOR 1 M SIDE)	Ground for CYP sensor 1	
15	WHT/BLU	CKP 2M (CKP SENSOR 2 M SIDE)	Ground for CKP sensor 2	
16	BLU/YEL	CKP 1M (CKP SENSOR 1 M SIDE)	Ground for CKP sensor 1	

(cont'd)

Engine Control Module Terminal Arrangement (cont'd)

ECM CONNECTOR C (12P)

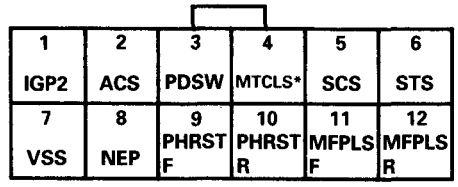

Wire side of female terminals

ECM CONNECTOR C (12P)

NOTE: Standard battery voltage is 12 V.
*: M/T

Terminal number	Wire color	Terminal name	Description	Signal
1	YEL/BLK	IGP2 (POWER SOURCE)	Power source for the ECM control circuit	With ignition switch ON (II): battery voltage With ignition switch OFF: 0 V
2	BLU/BLK	ACS (A/C SWITCH SIGNAL)	Detects A/C switch signal	With A/C switch ON: 0 V With A/C switch OFF: approx. 10 V
3	RED/GRN	PDSW (A/C PRESSURE SWITCH B)	Detects A/C pressure switch B signal	With A/C pressure switch B ON: 0 V With A/C pressure switch B OFF: approx. 5 V
4*	PNK	MTCLS (M/T CLUTCH SWITCH)	Detects M/T clutch switch signal	With ignition switch ON (II) and clutch pedal depressed: approx. 5 V With ignition switch ON (II) and clutch pedal released: 0 V
5	BLU	SCS (SERVICE CHECK SIGNAL)	Detects service check connector signal (the signal causing a DTC indication)	With the connector connected: 0 V With the connector disconnected: about 5 V or battery voltage
6	BLK/WHT	STS (STARTER SWITCH SIGNAL)	Detects starter switch signal	With starter switch ON: battery voltage With starter switch OFF: 0 V
7	ORN	VSS (VEHICLE SPEED SENSOR)	Detects VSS signal	With ignition switch ON (II) and rear wheels turning: cycles 0 - 5 V
8	GRN	NEP (ENGINE SPEED PULSE)	Outputs engine speed pulse	With engine running: pulses
9	GRN/YEL	PHRST F (FRONT PEAK HOLD RESET)	Sends peak hold reset signal	With engine running: pulses
10	GRN/BLK	PHRST R (REAR PEAK HOLD RESET)	Sends peak hold reset signal	With engine running: pulses
11	YEL/RED	MFPLS F (FRONT MISFIRE PULSE)	Detects misfire pulse	With engine running: pulses
12	YEL	MFPLS R (REAR MISFIRE PULSE)	Detects misfire pulse	With engine running: pulses

ECM CONNECTOR D (22P)

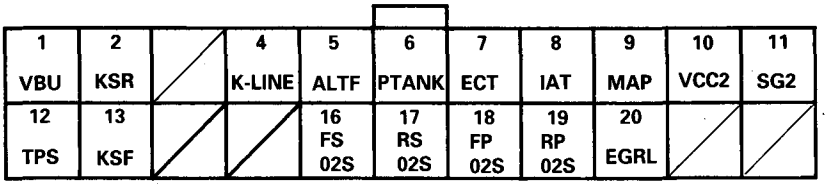

Wire side of female terminals

ECM CONNECTOR D (22P)

NOTE: Standard battery voltage is 12 V.

Terminal number	Wire color	Terminal name	Decription	Signal
1	WHT/YEL	VBU (VOLTAGE BACK UP)	Power source for the ECM control circuit Power source for the DTC memory	Battery voltage at all times
2	RED/BLU	KSR (REAR KNOCK SENSOR KS1)	Detects knock sensor signal	With engine knocking: pulses
4	YEL/GRN	K-LINE (DLC)	Sends or detects PGM tester and OBD II scan tool signal	With ignition switch ON (II): about 5 V
5	WHT/RED	ALTF (ALTERNATOR FR SIGNAL)	Detects alternator FR signal	With fully warmed up engine running: 0 V - 5 V (depending on electrical load)
6	BLU	PTANK (FUEL TANK PRESSURE SENSOR)	Detects fuel tank pressure sensor	With fuel fill cap opened: about 2.5 V
7	RED/WHT	ECT (ENGINE COOLANT TEMPERATURE SENSOR)	Detects ECT sensor signal	With ignition switch ON (II): about 0.1 - 4.8 V (depending on engine coolant temperature)
8	RED/YEL	IAT (INTAKE AIR TEMPERATURE SENSOR)	Detects IAT sensor signal	With ignition switch ON (II): about 0.1 - 4.8 V (depending on intake air temperature)
9	WHT/YEL	MAP (MANIFOLD ABSOLUTE PRESSURE SENSOR)	Detects MAP sensor signal	With ignition switch ON (II): about 3 V During idling: about 1.0 V (depending on engine speed)
10	YEL/BLU	VCC2 (SENSOR VOLTAGE)	Provides sensor voltage	With ignition switch ON (II): about 5 V With ignition switch OFF: 0 V
11	GRN/BLU	SG2 (SENSOR GROUND)	Sensor ground	
12	RED/BLK	TPS (THROTTLE POSITION SENSOR)	Detects TP sensor signal	With throttle fully open: about 4.5 V With throttle fully closed with fully warmed up engine: about 0.5 V
13	WHT	KSF (FRONT KNOCK SENSOR KS2)	Detects knock sensor signal	With engine knocking: pulses
16	GRN	02S FS (FRONT SECONDARY OXYGEN SENSOR)	Detects secondary oxygen sensor signal	With throttle fully opened with fully warmed up engine: above 0.6 V With throttle quickly closed: below 0.4 V
17	WHT/RED	O2S RS (REAR SECONDARY OXYGEN SENSOR)	Detects secondary oxygen sensor signal	With throttle fully opened with fully warmed up engine: above 0.6 V With throttle quickly closed: below 0.4 V
18	BLU/RED	O2S FP (FRONT PRIMARY OXYGEN SENSOR)	Detects primary oxygen sensor signal	With throttle fully opened with fully warmed up engine: above 0.6 V With throttle quickly closed: below 0.4 V
19	WHT	O2S RP (REAR PRIMARY OXYGEN SENSOR)	Detects primary oxygen sensor signal	With throttle fully opened with fully warmed up engine: above 0.6 V With throttle quickly closed: below 0.4 V
20	WHT/BLK	EGRL (EGR VALVE LIFT SENSOR)	Detects EGR valve lift sensor signal	During idling without vacuum: about 1.2V With 27 kPa (200 mmHg, 8 in.Hg): about 4.3V

(cont'd)

Engine Control Module Terminal Arrangement (cont'd)

ECM CONNECTOR F (26P)

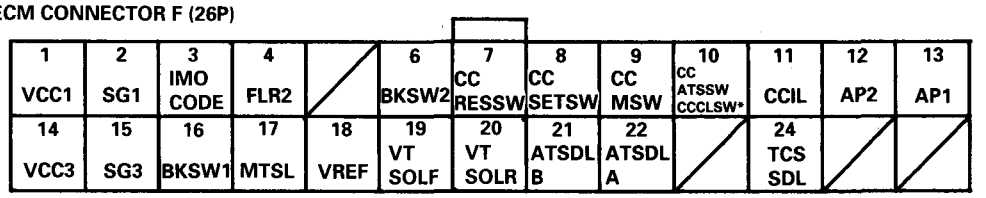

Wire side of female terminals

NOTE: Standard battery voltage is 12 V.

*: M/T

ECM CONNECTOR F (26P)

Terminal number	Wire color	Terminal name	Description	Signal
1	YEL/WHT	VCC1 (SENSOR VOLTAGE)	Provides sensor voltage	With ignition switch ON (II): about 5 V With ignition switch OFF: 0 V
2	GRN/WHT	SG1 (SENSOR GROUND)	Sensor ground	
3	BRN	IMO CODE (IMMOBILIZER CODE)	Detects immobilizer signal	
4	RED	FLR2 (FUEL PUMP RELAY 2)	Drives fuel pump relay	With engine at low rpm: battery voltage With engine at high rpm: 0 V
6	GRY	BKSW2 (BRAKE SWITCH 2)	Detects brake switch 2 signal	With brake pedal released and cruise control main switch ON: battery voltage With brake pedal depressed: 0 V
7	LT GRN/BLK	CCRESSW (CRUISE CONTROL RESUME SWITCH)	Detects resume switch signal	With resume switch released: 0 V With resume switch depressed: battery voltage
8	LT GRN/RED	CC SETSW (CRUISE CONTROL SET SWITCH)	Detects set switch signal	With set switch released: 0 V With set switch depressed: battery voltage
9	LTGRN	CC MSW (CRUISE CONTROL MAIN SWITCH)	Power source for the cruise control system	With cruise control main switch ON: battery voltage With cruise control main switch OFF: 0 V
10	BLU/ORN	CC ATSSW (CRUISE CONTROL A/T GEAR POSITION SWITCH)	Detects A/T gear position switch signal	In D, 3 or 2 position: 0 V In any other position: approx. 8 V
10*	BLU/ORN	CC CLSW (CRUISE CONTROL CLUTCH SWITCH)	Detects clutch switch signal	With clutch pedal released: approx. 8 V With clutch pedal depressed: 0 V
11	BLU/BLK	CCIL (CRUISE CONTROL INDICATOR LIGHT)	Drives cruise control indicator light	With cruise control ON: 0 V With cruise control OFF: battery voltage
12	YEL/RED	AP2 (ACCELERATOR POSITION SENSOR CIRCUIT 2)	Detects accelerator position sensor circuit 2 signal	With accelerator fully open: about 4.5 V With accelerator fully closed: about 0.5 V
13	BLU/RED	AP1 (ACCELERATOR POSITION SENSOR CIRCUIT 1)	Detects accelerator position sensor circuit 1 signal	With accelerator fully open: about 4.5 V With accelerator fully closed: about 0.5 V
14	YEL/WHT	VCC3 (SENSOR VOLTAGE)	Provides sensor voltage	With ignition switch ON (II): about 5 V With ignition switch OFF: 0 V
15	GRN/WHT	SG3 (SENSOR GROUND)	Sensor ground	
16	GRN/WHT	BKSW1 (BRAKE SWITCH 1)	Detects brake switch 1 signal	With brake pedal released: 0 V With brake pedal depressed: battery voltage
17	RED/WHT	MTSL (REVERSE LOCKOUT RELAY OUT)	Drives reverse lockout relay	With vehicle speed above 13 mph (20 km/h): 0 V With vehicle speed below 9 mph (15 km/h): battery voltage
18	BLU	VREF (REFERENCE VOLTAGE)	Provides reference voltage to TCM	With ignition switch ON (II): about 5 V With ignition switch OFF: 0 V
19	BLU/YEL	VT SOLF (FRONT VTEC SOLENOID VALVE)	Drives front VTEC solenoid valve	With engine at low rpm: 0 V With engine at high rpm: battery voltage
20	GRN/YEL	VT SOLR (REAR VTEC SOLENOID VALVE)	Drives rear VTEC solenoid valve	With engine at low rpm: 0 V With engine at high rpm: battery voltage
21	LT GRN/YEL	ATSDL B (A/T FI DATA LINE B)	Detects data from the TCM	With engine running: pulses
22	WHT/YEL	ATSDL (A/T FI. DATA LINE A)	Sends data to the TCM	With engine running: pulses
24	RED/BLU	TCSSDL (TCS DATA LINE)	Interface for TCS control unit	With engine running: pulses

ECM CONNECTOR G (12P)

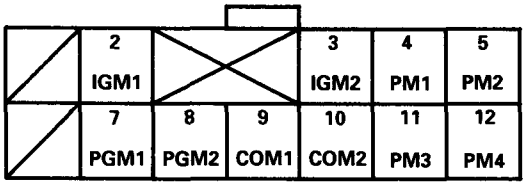

Wire side of female terminals

ECM CONNECTOR G (12P)

NOTE: Standard battery voltage is 12 V.

Terminal number	Wire color	Terminal name	Description	Signal
2	GRN/RED	IGM1 (POWER SOURCE)	Power source for throttle valve control motor	With ignition switch ON (II): battery voltage With ignition switch OFF: 0 V
3	GRN/RED	IGM2 (POWER SOURCE)	Power source for throttle valve control motor	With ignition switch ON (II): battery voltage With ignition switch OFF: 0 V
4	BRN	PM1 (MOTOR PHASE OUT1)	Sends pulse to throttle valve control motor	With ignition switch ON (II): 0 V or pulses With ignition switch OFF: 0 V
5	WHT/GRN	PM2 (MOTOR PHASE OUT 2)	Sends pulse to throttle valve control motor	With ignition switch ON (II): 0 V or pulses With ignition switch OFF: 0 V
7	BLK	PGM1 (POWER GROUND)	Power ground for throttle valve control motor	
8	BLK	PGM2 (POWER GROUND)	Power ground for throttle valve control motor	
9	ORN	COM1 (COMMON POWER SOURCE FOR MOTOR PHASE 1 and 3)	Sends power source to throttle valve control motor	With ignition switch ON (II): pulses With ignition switch OFF: 0 V
10	GRN	COM2 (COMMON POWER SOURCE FOR MOTOR PHASE 2 and 4)	Sends power source to throttle valve control motor	With ignition switch ON (II): pulses With ignition switch OFF: 0 V
11	YEL	PM3 (MOTOR PHASE OUT 3)	Sends pulse to throttle valve control motor	With ignition switch ON (II): 0 V or pulses With ignition switch OFF: 0 V
12	RED	PM4 (MOTOR PHASE OUT 4)	Sends pulse to throttle valve control motor	With ignition switch ON (II): 0 V or pulses With ignition switch OFF: 0 V

Troubleshooting

Diagnostic Trouble Code (DTC) Chart

Note: Refer to page 11-48c or 11-9g for DTCs not listed on this chart.

DTC (MIL indication*)	Detection Item	Probable Cause	Page
P0107 (3)	Manifold Absolute Pressure Circuit Low Input	• Open or short in MAP sensor circuit • MAP sensor •ECM •TCM	11-65
P0108 (3)	Manifold Absolute Pressure Circuit High Input	• Open in MAP sensor circuit • MAP sensor • ECM	11-67
P0111 (10)	Intake Air Temperature Circuit Range/Performance Problem	• IAT sensor	11-69
P0112 (10)	Intake Air Temperature Circuit Low Input	• Short in IAT sensor circuit • IAT sensor •ECM	11-70
P0113 (10)	Intake Air Temperature Circuit High Input	• Open in IAT sensor circuit • IAT sensor •ECM	11-71
P0116 (86)	Engine Coolant Temperature Circuit Range/Performance Problem	• ECT sensor • Cooling system	11-72
P0117 (6)	Engine Coolant Temperature Circuit Low Input	• Short in ECT sensor circuit • ECT sensor •ECM	11-73
P0118 (6)	Engine Coolant Temperature Circuit High Input	• Open in ECT sensor circuit • ECT sensor •ECM	11-74
P0122 (7)	Throttle Position Circuit Low Input	• Open or short in TP sensor circuit • TP sensor • ECM •TCM	11-75
P0123 (7)	Throttle Position Circuit High Input	• Open in TP sensor circuit • TP sensor •ECM	11-77
P0131 (2)	Rear Primary Heated Oxygen Sensor Circuit Low Voltage (Bank 1, Sensor 1)	• Short in Rear Primary H02S (Bank 1, Sensor 1) circuit • Rear Primary H02S (Bank 1, Sensor 1) • Fuel supply system •ECM	11-78
P0132 (2)	Rear Primary Heated Oxygen Sensor Circuit High Voltage (Bank 1, Sensor 1)	• Open in Rear Primary H02S (Bank 1, Sensor 1) circuit • Rear Primary H02S (Bank 1, Sensor 1) •ECM	11-80
P0133 (62)	Rear Primary Heated Oxygen Sensor Slow Response (Bank 1, Sensor 1)	• Rear Primary HO2S (Bank 1, Sensor 1) • Exhaust system	11-81
P0135 (42)	Rear Primary Heated Oxygen Sensor Heater Circuit Malfunction (Bank 1, Sensor 1)	• Open or short in Rear Primary HO2S (Bank 1, Sensor 1) heater circuit • ECM	11-85 ('97-01) 11-32e ('02)

*: These DTCs will be indicated by the blinking of the Malfunction Indicator Lamp (MIL) with the SCS service connector connected

DTC (MIL indication)	Detection Item	Probable Cause	Page
P0137 (64)	Rear Secondary Heated Oxygen Sensor Circuit Low Voltage (Bank 1, Sensor 2)	• Short in Rear Secondary HO2S (Bank 1, Sensor 2) circuit • Rear Secondary H02S (Bank 1, Sensor 2) • ECM	11-82
P0138 (64)	Rear Secondary Heated Oxygen Sensor Circuit High Voltage (Bank 1, Sensor 2)	• Open in Rear Secondary H02S (Bank 1, Sensor 2) circuit • Rear Secondary H02S (Bank 1 , Sensor 2) • ECM	11-83
P0139 (64)	Rear Secondary Heated Oxygen Sensor Slow Response (Bank 1, Sensor 2)	• Rear Secondary HO2S (Bank 1, Sensor 2)	11-84
P0141 (66)	Rear Secondary Heated Oxygen Sensor Heater Circuit Malfunction (Bank 1, Sensor 2)	• Open or short in Rear Secondary HO2S (Bank 1, Sensor 2) heater circuit • ECM	11-85 ('97-01) 11-32e ('02)
P0151 (1)	Front Primary Heated Oxygen Sensor Circuit Low Voltage (Bank 2, Sensor 1)	• Short in Front Primary H02S (Bank 2, Sensor 1) circuit • Front Primary HO2S (Bank 2, Sensor 1) • Fuel supply system • ECM	11-78
P0152 (1)	Front Primary Heated Oxygen Sensor Circuit High Voltage (Bank 2, Sensor 1)	• Open in Front Primary HO2S (Bank 2, Sensor 1) circuit • Front Primary H02S (Bank 2, Sensor 1) • ECM	11-80
P0153 (61)	Front Primary Heated Oxygen Sensor Slow Response (Bank 2, Sensor 1)	• Front Primary H02S (Bank 2, Sensor 1) • Exhaust system	11-81
P0155 (41)	Front Primary Heated Oxygen Sensor Heater Circuit Malfunction (Bank 2, Sensor 1)	• Open or short in Front Primary H02S (Bank 2, Sensor 1) heater circuit • ECM	11-85 ('97-01) 11-32e ('02)
P0157 (63)	Front Secondary Heated Oxygen Sensor Circuit Low Voltage (Bank 2, Sensor 2)	• Short in Front Secondary H02S (Bank 2, Sensor 2) circuit • Front Secondary HO2S (Bank 2, Sensor 2) • ECM	11-82
P0158 (63)	Front Secondary Heated Oxygen Sensor Circuit High Voltage (Bank 2, Sensor 2)	• Open in Front Secondary H02S (Bank 2, Sensor 2) circuit • Front Secondary H02S (Bank 2, Sensor 2) • ECM	11-83
P0159 (63)	Front Secondary Heated Oxygen Sensor Slow Response (Bank 2, Sensor 2)	• Front Secondary H02S (Bank 2, Sensor 2)	11-84
P0161 (65)	Front Secondary Heated Oxygen Sensor Heater Circuit Malfunction (Bank 2, Sensor 2)	• Open or short in Front Secondary H02S (Bank 2, Sensor 2) heater circuit • ECM	11-85 ('97-01) 11-32e ('02)
P0171 (46)	System Too Lean [Rear Bank (Bank 1)]	• Fuel supply system • Rear Primary HO2S (Bank 1, Sensor 1) • MAP sensor • Contaminated fuel • Valve clearance • Exhaust leakage	11-87
P0172 (46)	System Too Rich [Rear Bank (Bank 1)]	• Fuel supply system • Rear Primary H02S (Bank 1, Sensor 1) • MAP sensor • Contaminated fuel • Valve clearance	11-87

(cont'd)

Diagnostic Trouble Code (DTC) Chart (cont'd)

DTC (MIL indication)	Detection Item	Probable Cause	Page
P0174 (45)	System Too Lean [Front Bank (Bank 2)]	• Fuel supply system • Front Primary H02S (Bank 2, Sensor 1) • MAP sensor • Contaminated fuel • Valve clearance • Exhaust leakage	11-87
P0175 (45)	System Too Rich [Front Bank (Bank 2)]	• Fuel supply system • Front Primary HO2S (Bank 2, Sensor 1) • MAP sensor • Contaminated fuel • Valve clearance	11-87
P0325 (53)	Rear Knock Sensor (KS1) circuit malfunction	• Open or short in Rear Knock Sensor (KS1) circuit • Rear Knock Sensor (KS1) • ECM	11-89
P0330 (23)	Front Knock Sensor (KS2) circuit malfunction	• Open or short in Front Knock Sensor (KS2) circuit • Front Knock Sensor (KS2) • ECM	11-89
P0335 (4)	Crankshaft Position Sensor A Circuit Low Input	• Crankshaft Position Sensor A • Crankshaft Position Sensor A circuit •ECM	11-100
P0336 (4)	Crankshaft Position Sensor A Range/Performance	• Crankshaft Position Sensor A • Timing belt skipped teeth	11-100
P0401 (80)	Exhaust Gas Recirculation Insufficient Flow Detected	• EGR valve • EGR line	11-162
P0420 (68)	Rear Catalyst System Efficiency Below Threshold	• Rear Three Way Catalytic converter • Rear Secondary HO2S	11-160
P0430 (67)	Front Catalyst System Efficiency Below Threshold	• Front Three Way Catalytic converter • Front Secondary HO2S	11-160
P0452 (91)	Evaporative Emission Control System Pressure Sensor (Fuel Tank Pressure Sensor) Circuit Low Input	• Open or short in Fuel Tank Pressure Sensor circuit • Fuel Tank Pressure Sensor • PCM	11-168
P0453 (91)	Evaporative Emission Control System Pressure Sensor (Fuel Tank Pressure Sensor) Circuit High Input	• Open in Fuel Tank Pressure Sensor circuit • Fuel Tank Pressure Sensor • ECM	11-170
P0500 (17)	Vehicle Speed Sensor Circuit Low Input	• Vehicle Speed Sensor • Vehicle Speed Sensor circuit •ECM	11-102
P0505 (14)	Idle Control System Malfunction	• Idle speed setting • Throttle Body	11-117

*: The D indicator light and the Malfunction Indicator Lamp (MIL) may come on simultaneously.

DTC (MIL indication)	Detection Item	Probable Cause	Page
P0700 P0715 P0720 P0725 (70)* P0730 P0740 P0753 P0758	Automatic Transaxle	———	Section 14
P1106 (13)	Barometric Pressure Circuit Range/Performance Problem	• ECM (Baro sensor)	11-103
P1107 (13)	Barometric Pressure Circuit Low Input	• ECM (Baro sensor)	11-103
P1108 (13)	Barometric Pressure Circuit High Input	• ECM (Baro sensor)	11-103
P1128 (5)	Manifold Absolute Pressure Lower Than Expected	• MAP sensor	11-68
P1129 (5)	Manifold Absolute Pressure Higher Than Expected	• MAP sensor	11-68
P1201 (71) P1202 (72) P1203 (73) P1204 (74) P1205 (75) P1206 (76)	— Cylinder 1 — Cylinder 2 — Cylinder 3 — Cylinder 4 — Cylinder 5 — Cylinder 6 Misfire Detected	• Fuel injector • Fuel injector circuit • Ignition system • Low compression • Valve clearance	11-90
P1241 (40)	Throttle Valve Control Motor Circuit 1 Malfunction	• Open or short in Throttle Valve Control Motor circuit 1 • Throttle Valve Control Motor •ECM	11-109
P1242 (40)	Throttle Valve Control Motor Circuit 2 Malfunction	• Open or short in Throttle Valve Control Motor circuit 2 • Throttle Valve Control Motor •ECM	11-109
P1243 (40)	Throttle Position Insufficient	• Throttle Valve • TP sensor • Throttle Valve Control Motor	11-111
P1244 (40)	Closed Throttle Position Insufficient	• Throttle Valve • TP sensor	11-111
P1246 (37)	Accelerator Position Sensor 1 Circuit Malfunction	• Open or short in Accelerator Position sensor 1 circuit • Accelerator Position sensor •ECM	11-114
P1247 (37)	Accelerator Position Sensor 2 Circuit Malfunction	• Open or short in Accelerator Position sensor 2 circuit • Accelerator Position sensor •ECM	11-114
P1248 (37)	Accelerator Position Sensor 1 and 2 Incorrect Correlation	• Accelerator Position sensor	11-114
P1259 (52)	VTEC System Malfunction [Rear Bank (Bank 1)]	• Open or short in Rear VTEC Solenoid Valve circuit • Rear VTEC Solenoid Valve • Open or short in Rear VTEC Pressure Switch circuit • Rear VTEC Pressure Switch •ECM	Section 6

(cont'd)

Diagnostic Trouble Code (DTC) Chart (cont'd)

DTC (MIL indication)	Detection Item	Probable Cause	Page
P1279 (22)	VTEC System Malfunction [Front Bank (Bank 2)]	• Open or short in Front VTEC Solenoid Valve circuit • Front VTEC Solenoid Valve • Open or short in Front VTEC Pressure Switch circuit • Front VTEC Pressure Switch • ECM	Section 6
P0300 or P1300 (71, 72, 73, 74, 75, 76)	Random Misfire	• Ignition system • Fuel supply system • MAP sensor • EGR system • Contaminated fuel • Lack of fuel	11-94
P1301 P1302 P1303 P1304 P1305 P1306 (71, 72, 73, 74, 75, 76)	— Cylinder 1 — Cylinder 2 — Cylinders — Cylinder 4 — Cylinder 5 — Cylinder 6 Misfire Detected	• Ignition system	11-90
P1316 (79)	Spark Plug Voltage Detection Circuit Malfunction [Front Bank (Bank 2)]	• Open or short in Spark Plug Voltage Detection Module circuit • Spark Plug Voltage Detection Module •ECM	11-96
P1317 (79)	Spark Plug Voltage Detection Circuit Malfunction [Rear Bank (Bank 1)]	• Open or short in Spark Plug Voltage Detection Module circuit • Spark Plug Voltage Detection Module • ECM	11-96
P1318 (79)	Spark Plug Voltage Detection Module Reset Circuit Malfunction [Front Bank (Bank 2)]	• Open or short in Spark Plug Voltage Detection Module Reset circuit • Spark Plug Voltage Detection Module • ECM	11-98
P1319 (79)	Spark Plug Voltage Detection Module Reset Circuit Malfunction [Rear Bank (Bank 1)]	• Open or short in Spark Plug Voltage Detection Module Reset circuit • Spark Plug Voltage Detection Module •ECM	11-98
P1336 (54)	Crankshaft Position Sensor B Range/Performance	• Crankshaft Position Sensor B • Timing belt skipped teeth	11-100
P1337 (54)	Crankshaft Position Sensor B Circuit Low Input	• Crankshaft Position Sensor B • Crankshaft Position Sensor B circuit •ECM	11-100
P1381 (9)	Cylinder Position Sensor A Intermittent Interruption	• Cylinder Position Sensor A	11-100
P1382 (9)	Cylinder Position Sensor A No Signal	• Cylinder Position Sensor A • Cylinder Position Sensor A circuit • ECM	11-100
P1386 (59)	Cylinder Position Sensor B Intermittent Interruption	• Cylinder Position Sensor B	11-100
P1387 (59)	Cylinder Position Sensor B No Signal	• Cylinder Position Sensor B • Cylinder Position Sensor B circuit • ECM	11-100

DTC (MIL indication)	Detection Item	Probable Cause	Page
P1456 (90)**	Evaporative Emission Control System Leak Detected (Fuel Tank Area)	• Vacuum connection • Fuel tank • Fuel tank pressure sensor • Fuel fill cap • EVAP bypass solenoid valve • EVAP two way valve • EVAP control canister vent shut valve • EVAP control canister • EVAP purge control solenoid valve	11-172 ('97-99) 11-60c ('00-02)
P1457 (90)**	Evaporative Emission Control System Leak Detected (EVAP Control Canister Area)	• Vacuum connection • EVAP control canister • Fuel tank pressure sensor • EVAP bypass solenoid valve • EVAP two way valve • EVAP control canister vent shut valve • Fuel Tank • EVAP purge control solenoid valve	11-172 ('97-99) 11-65c ('01-02)
P1491 (12)	EGR Valve Lift Insufficient Detected	• EGR valve (with lift sensor) • EGR valve lift sensor circuit • EGR control solenoid valve • EGR control solenoid valve circuit •EGR line •ECM	11-163
P1498 (12)	EGR Valve Lift Sensor High Voltage	• EGR valve (with lift sensor) • EGR valve lift sensor circuit • ECM	11-165
PI 607 (-)	Engine Control Module Internal Circuit Failure A	•ECM	11-104
P1608 (-)	Engine Control Module Internal Circuit Failure 8	• ECM	11-104
P1671 (31)	A/TFI Data Line No Signal	• A/T FI Data Line •TCM • ECM	11-105
P1672 (31)	A/TFI Data Line Failure	• A/T FI Data Line •TCM • ECM	11-105
P1676 (35)	TCSFI Data Line No Signal	• TCS FI Data Line • TCS Control Unit • ECM	Section 19
P1677 (35)	TCSFI Data Line Failure	• TCS FI Data Line • TCS Control Unit •ECM	Section 19
P1705 P1706 P1753 P1758 P1768 P1788 (70)* P1790 P1791 P1792 P1793 P1795	Automatic Transaxle	——	Section 14

*: The D indicator light and the Malfunction Indicator Lamp (MIL) may come on simultaneously.

Troubleshooting

How to Read Flowcharts

A flowchart is designed to be used from start to final repair. It's like a map showing you the shortest distance. But beware: if you go off the "map" anywhere but a "stop" symbol, you can easily get lost.

START (bold type)	Describes the conditions or situation to start a troubleshooting flowchart.
ACTION	Asks you to do something; perform a test, set up a condition etc.
DECISION	Asks you about the result of an action, then sends you in the appropriate troubleshooting direction.
STOP (bold type)	The end of a series of actions and decisions, describes a final repair action and sometimes directs you to an earlier part of the flowchart to confirm your repair.

NOTE:

- The term "Intermittent Failure" is used in these charts. It simply means a system may have had a failure, but it checks out OK at this time. If the Malfunction Indicator Lamp (MIL) on the dash does not come on, check for poor connections or loose wires at all connectors related to the circuit that you are troubleshooting (see illustration below).
- Some of the troubleshooting flowcharts have you reset the Engine Control Module (ECM) and try to duplicate the Diagnostic Trouble Code (DTC). If the problem is intermittent and you can't duplicate the code, do not continue through the flowchart. To do so will only result in confusion and, possibly, a needlessly replaced ECM.
- "Open" and "Short" are common electrical terms. An open is a break in a wire or at a connection. A short is an accidental connection of a wire to ground or to another wire. In simple electronics, this usually means something won't work at all. In complex electronics (like ECM's), this can sometimes mean something works, but not the way it's supposed to.

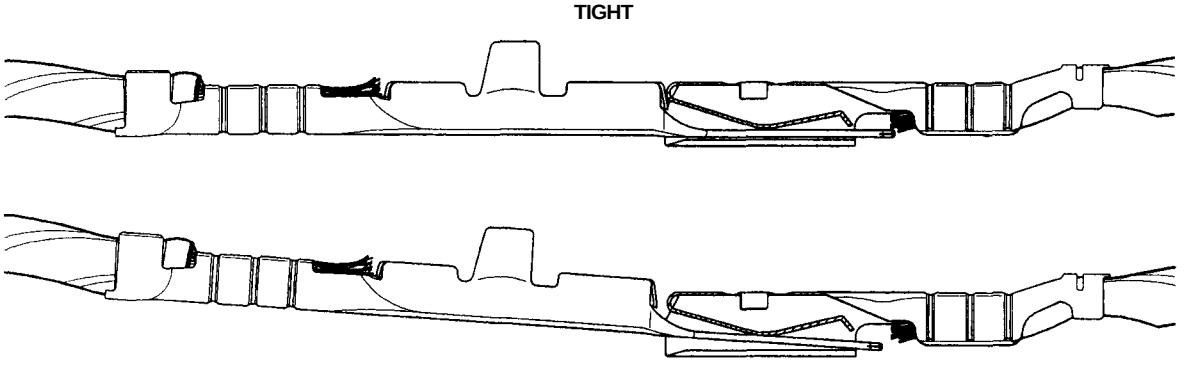

PGM-FI System

System Description

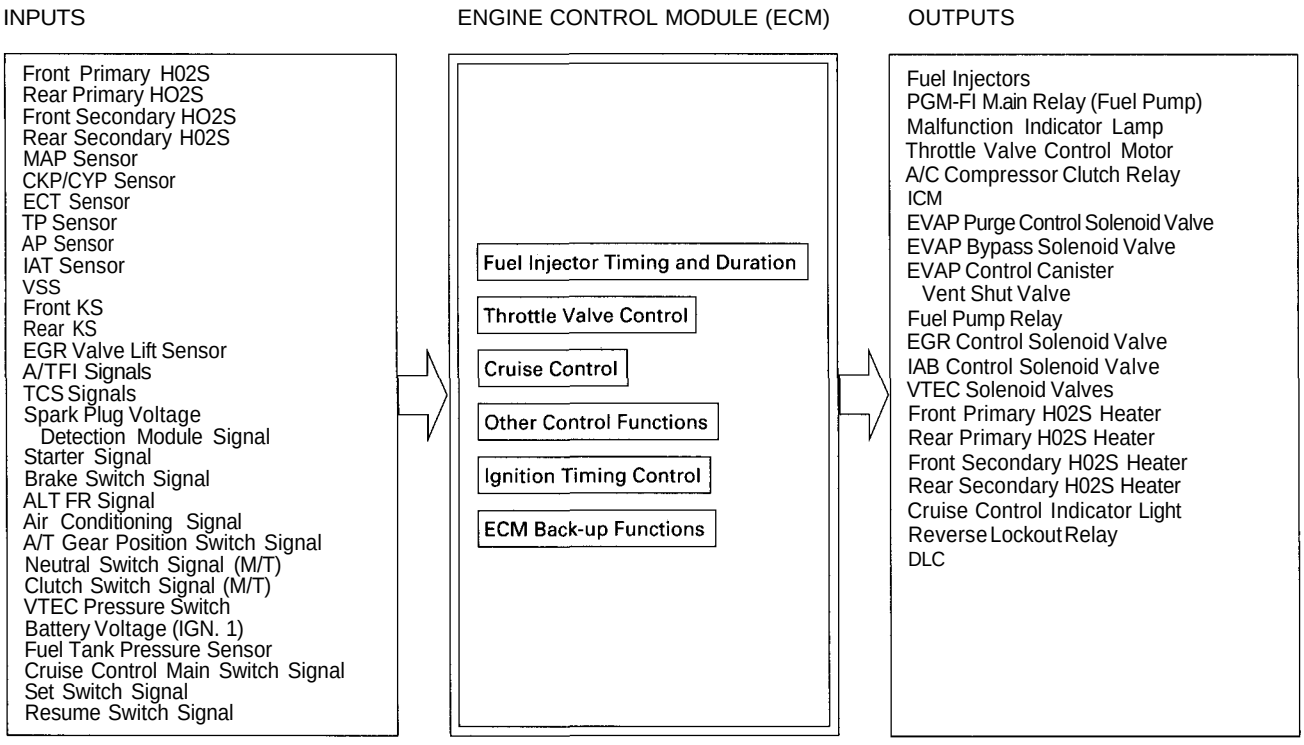

PGM-FI System

The PGM-FI system on this model is a sequential multiport fuel injection system.

Fuel Injector Timing and Duration

The ECM contains memories for the basic discharge durations at various engine speeds and manifold pressures. The basic discharge duration, after being read out from the memory, is further modified by signals sent from various sensors to obtain the final discharge duration.

Throttle Valve Control

The ECM controls the throttle valve control motor based on accelerator pedal position, TCS control unit signals, and various other signals. The ECM also controls the idle control function, cruise control function, and other functions with the throttle valve control.

Ignition Timing Control

- The ECM contains memories for basic ignition timing at various engine speeds and manifold pressures. Ignition timing is also adjusted for engine coolant temperature.
- A knock control system is also used. When detonation is detected by the knock sensor (KS), the ignition timing is retarded.

Other Control Functions

1. Starting Control
   When the engine is started, the ECM provides a rich mixture by increasing fuel injector duration.
2. Fuel Pump Control
   - When the ignition switch is initially turned on (II), the ECM supplies ground to the PGM-FI main relay that supplies current to the fuel pump for two seconds to pressurize the fuel system.
   - When the engine is running, the ECM supplies ground to the PGM-FI main relay that supplies current to the fuel pump.
   - When the engine is not running and the ignition is on, the ECM cuts ground to the PGM-FI main relay which cuts current to the fuel pump.
   - Excellent engine performance is achieved through the use of VTEC (Variable Valve Timing and Valve Lift Electronic Control System), intake air bypass control and discharge volume control of the fuel pump.

(cont'd)

System Description (cont'd)

3. Fuel Cut-off Control
   - During deceleration with the throttle valve closed, current to the fuel injectors is cut off to improve fuel economy at speeds over 1,500 rpm.
   - Fuel cut-off action also takes place when engine speed exceeds 8,300 rpm, regardless of the position of the throttle valve, to protect the engine from over-revving.

4. A/C Compressor Clutch Relay
   When the ECM receives a demand for cooling from the air conditioning system, it delays the compressor from being energized, and enriches the mixture to assure smooth translation to the A/C mode.

5. Evaporative Emission (EVAP) Purge Control Solenoid Valve
   When the engine coolant temperature is below 153°F (67°C), the ECM controls the EVAP purge control solenoid valve which cuts vacuum to the EVAP purge control canister diaphragm.

6. Intake Air Bypass (IAB) Control Solenoid Valve
   When the engine speed is below 4,800 rpm, the IAB control solenoid valve is activated by a signal from the ECM. Intake air then flows through the smaller chamber, and high torque is delivered. To increase air flow at engine speeds higher than 4,800 rpm, the solenoid valve is deactivated by the ECM, and the intake air flows through the larger chamber.

7. Exhaust Gas Recirculation (EGR) Control Solenoid Valve
   When the EGR is required for control of oxides of nitrogen (NOx) emissions, the ECM supplies ground to the EGR control solenoid valve which supplies regulated vacuum to the EGR valve.

ECM Fail-safe/Back-up Functions

1. Fail-Safe Function
   When an abnormality occurs in a signal from a sensor, the ECM ignores that signal and assumes a pre-programmed valve for that sensor that allows the engine to continue to run.

2. Back-up Function
   When an abnormality occurs in the ECM itself, the fuel injectors are controlled by a back-up circuit independent of the system in order to permit minimal driving.

3. Self-diagnosis Function [Malfunction Indicator Lamp (MIL)]
   When an abnormality occurs in a signal from a sensor, the ECM lights the MIL and stores the diagnostic trouble code in erasable memory. When the ignition is initially turned on, the ECM supplies ground for the MIL for two seconds to check the MIL bulb condition.

4. Two Trip Detection Method
   To prevent false indications, the Two Trip Detection Method is used for the H02S, fuel metering-related, idle control system, ECT sensor, EGR system self-diagnostic functions and EVAP control system. When an abnormality occurs, the ECM stores it in its memory. When the same abnormality recurs after the ignition switch is turned OFF and ON (II) again, the ECM informs the driver by lighting the MIL.
   However, to ease troubleshooting, this function is cancelled when you short the service check connector. The MIL will then blink immediately when an abnormality occurs.

5. Two (or three) Driving Cycle Detection Method
   A "Driving Cycle" consists of starting the engine, beginning closed loop operation, and stopping the engine. If misfiring that increases emissions or EVAP control system malfunction is detected during two consecutive driving cycles, or TWC deterioration is detected during three consecutive driving cycles, the ECM turns the MIL on.
   However, to ease troubleshooting, this function is cancelled when you short the service check connector. The MIL will then blink immediately when an abnormality occurs.

Engine Control Module (ECM)

The Malfunction Indicator Lamp (MIL) never comes on (even for two seconds) after ignition is turned ON (II).

NOTE: If this symptom is intermittent, check for a loose No. 5 BACK-UP LIGHTS, ALTERNATOR, TURN SIGNALS (15 A) fuse in the under-dash fuse/relay box, a poor connection at ECM terminal A7, or an intermittent open in the BLU wire between the ECM (A7) and the gauge assembly.

Turn the ignition switch ON (II).

Is the low oil pressure light on?

NO

- **Repair short in the wire between No. 5 BACK-UP LIGHTS, ALTERNATOR, TURN SIGNALS (15 A) fuse and gauge assembly.**
- **Replace No. 5 BACK-UP LIGHTS, ALTERNATOR, TURN SIGNALS (15 A) fuse.**

YES

Try to start the engine.

Does the engine start?

NO

Check for an open in the wires (PG lines):
1. Turn the ignition switch ON (II).
2. Measure voltage between body ground and ECM connector terminals A12 and A25 individually.

ECM CONNECTOR A (26P)

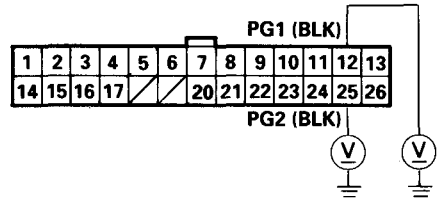

Wire side of female terminals

Is there less than 1.0 V?

NO

Repair open in the wire(s) between ECM and G101 (located at intake manifold) that had more than 1.0V.

YES

Substitute a known-good ECM and recheck (see page 11-39 for immobilizer information). If symptom/indication goes away, replace the original ECM.

YES

Check for an open in the wire or bulb:
1. Turn the ignition switch OFF.
2. Connect the ECM connector terminal A7 to body ground with a jumper wire.
3. Turn the ignition switch ON (II).

JUMPER WIRE

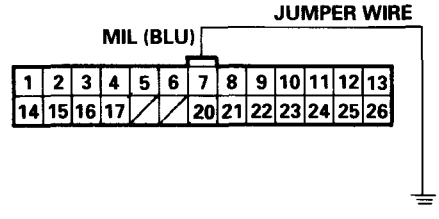

Is the MIL on?

NO

- **Repair open in the wires between ECM (A7) and gauge assembly.**
- **Replace the MIL bulb.**

YES

Substitute a known-good ECM, and recheck (see page 11-39 for immobilizer information). If symptom/indication goes away, replace the original ECM.

(cont'd)

Engine Control Module (ECM) (cont'd)

The Malfunction Indicator Lamp (MIL) stays on or comes on after two seconds.

Check the Diagnostic Trouble Code (DTC):
1. Connect a scan tool or Honda PGM Tester.
2. Turn the ignition switch ON (II).
3. Read the DTC with the scan tool or Honda PGM Tester.

Are any DTC(s) indicated?

YES → **Go to troubleshooting procedures, (see page 11-38)**

NO

Check the DTC by MIL indication:
1. Turn the ignition switch OFF.
2. Connect the SCS service connector to the service check connector.
3. Turn the ignition switch ON (II).

Does the MIL indicate any DTC?

YES → **— Repair open or short in wire between the ECM (D4) and Data Link Connector.**
— Go to troubleshooting procedures, (see page 11-38)

NO

Try to start the engine.

Does the engine start?

NO → (A) (To page 11-63)

YES

Check for a short in the wire (SCS line):
1. Stop the engine and turn the ignition switch ON (II).
2. Measure voltage between the ECM connector terminal C5 and body ground.

Is there approx. 5 V?

NO → **Repair short to body ground in the wire between ECM (C5) and service check connector.**

YES

(To page 11-63)

NOTE:
- When there is no Diagnostic Trouble Code (DTC) stored, the MIL will stay on if the SCS service connector is connected and the ignition switch is on.
- If this symptom is intermittent, check for:
  - — A loose ACG(S) (20 A) fuse in the engine compartment fuse/relay box
  - — A loose No. 2 FUEL PUMP SRS2 (15 A) fuse in the under-dash fuse box
  - — An intermittent short in the wire between the ECM (C5) and the service check connector
  - — An intermittent open in the wires between the ECM (A26, B14) and the service check connector
  - — An intermittent short in the wire between the ECM (A7) and the gauge assembly
  - — An intermittent short in the wire between the ECM (F1) and the MAP sensor, accelerator position sensor
  - — An intermittent short in the wire between the ECM (D10) and the TP sensor, EGR valve lift sensor
  - — An intermittent short in the wire between the ECM (F14) and accelerator position sensor
- See the OBD II scan tool or Honda PGM Tester user's manuals for specific operating instructions.

ECM CONNECTOR (12P)

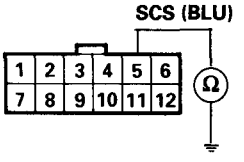

Wire side of female terminals

(From page 11-62)

Check for a short in the wire (MIL line):
1. Turn the ignition switch OFF.
2. Disconnect the ECM connector A (26P).
3. Turn the ignition switch ON (II).

Is the MIL ON?

YES → **Repair short to body ground in the wire between the ECM (A7) and MIL.**

NO

Substitute a known-good ECM and recheck (see page 11-39 for immobilizer information). If symptom/indication goes away, replace the original ECM.

(From page 11-62)

A

Inspect ACG(S) (20 A) fuse in the engine compartment fuse/relay box.

Is the fuse OK?

NO → **— Repair short in the wire between ACG(S) (20 A) fuse and PGM-FI main relay.**
— Replace ACG(S) (20 A) fuse.

YES

Inspect IG COIL (30 A) fuse in the engine compartment fuse/relay box.

Is the fuse OK?

NO → **— Repair short in the wire between IG COIL (30 A) fuse and PGM-FI main relay.**
— Replace IG COIL (30 A) fuse.

YES

Check for a short in a sensor:
1. Turn the ignition switch ON (II).
2. Disconnect the 3P connector of each sensor one at time:
   - MAP sensor
   - TP sensor
   - EGR valve lift sensor
   - Fuel tank pressure sensor

Does the MIL remain ON?

NO → **Replace the sensor that caused the light to go out.**

YES

(To page 11-64)

(cont'd)

Engine Control Module (ECM) (cont'd)

(From page 11-63)

Check for a short in the AP sensor:
1. Turn the ignition switch OFF.
2. Connect the SCS service connector.
3. Disconnect the AP sensor 3P connector.
4. Turn the ignition switch ON (II).

Is DTC P1246 and/or P1247 indicated?

YES → **Replace the AP sensor.**

NO

Check for a short in the wires (VCC lines):
1. Turn the ignition switch OFF.
2. Disconnect the ECM connector D (22P) and F (26P).
3. Check for continuity between body ground and ECM connector terminals D10, F1 and F14 individually.

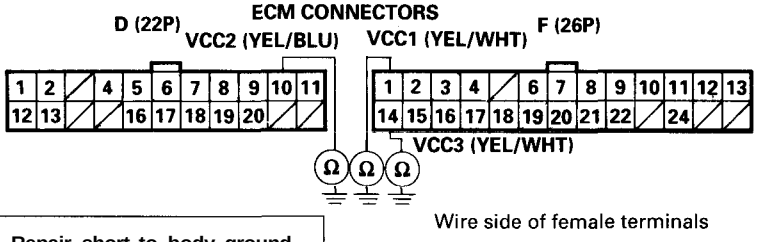

Is there continuity?

YES →
- **Repair short to body ground in the wire between ECM (D10) and throttle angle sensor and EGR valve lift sensor.**
- **Repair short to body ground in the wire between ECM (F1) and MAP sensor Accelerator Position sensor or fuel tank pressure sensor.**
- **Repair short to body ground in the wire between ECM (F14) and Accelerator Position sensor.**

NO

Check for an open in the wires (IGP lines):
1. Turn the ignition switch ON (II).
2. Measure voltage between body ground and ECM connector terminals A13 and C1 individually.

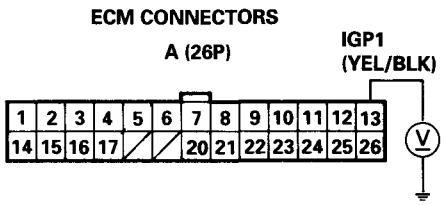

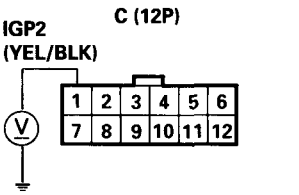

Is there battery voltage?

NO →
- **Repair open in the wire(s) between ECM (A13, CD and PGM-FI main relay.**
- **Check for poor connections or loose wires at the PGM-FI main relay.**

YES

Check for an open in the wires (LG lines):
1. Reconnect all sensor connectors.
2. Reconnect the ECM connector D (22P) F (26P).
3. Turn the ignition switch ON (II).
4. Measure voltage between body ground and ECM connector terminals A26 and B9 individually.

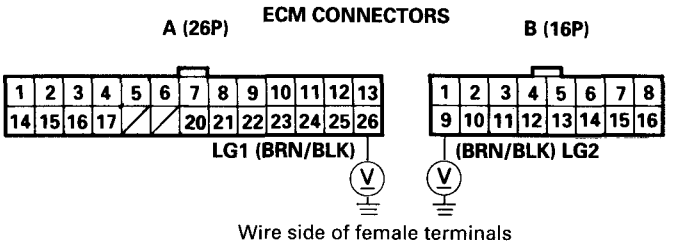

Is there less than 1.0V?

NO → **Repair open in the wire(s) between ECM (A26, B9) and G101 that had more than 1.0 V.**

YES

Substitute a known-good ECM and recheck (see page 11-39 for immobilizer information). If symptom/indication goes away, replace the original ECM.

Drive By Wire System

System Description

The Drive By Wire System is an electronic throttle control system.
This system consists of the throttle valve control motor and Throttle Position (TP) sensor assembled in Throttle Body (TB), the accelerator position sensor, and the Engine Control Module (ECM).

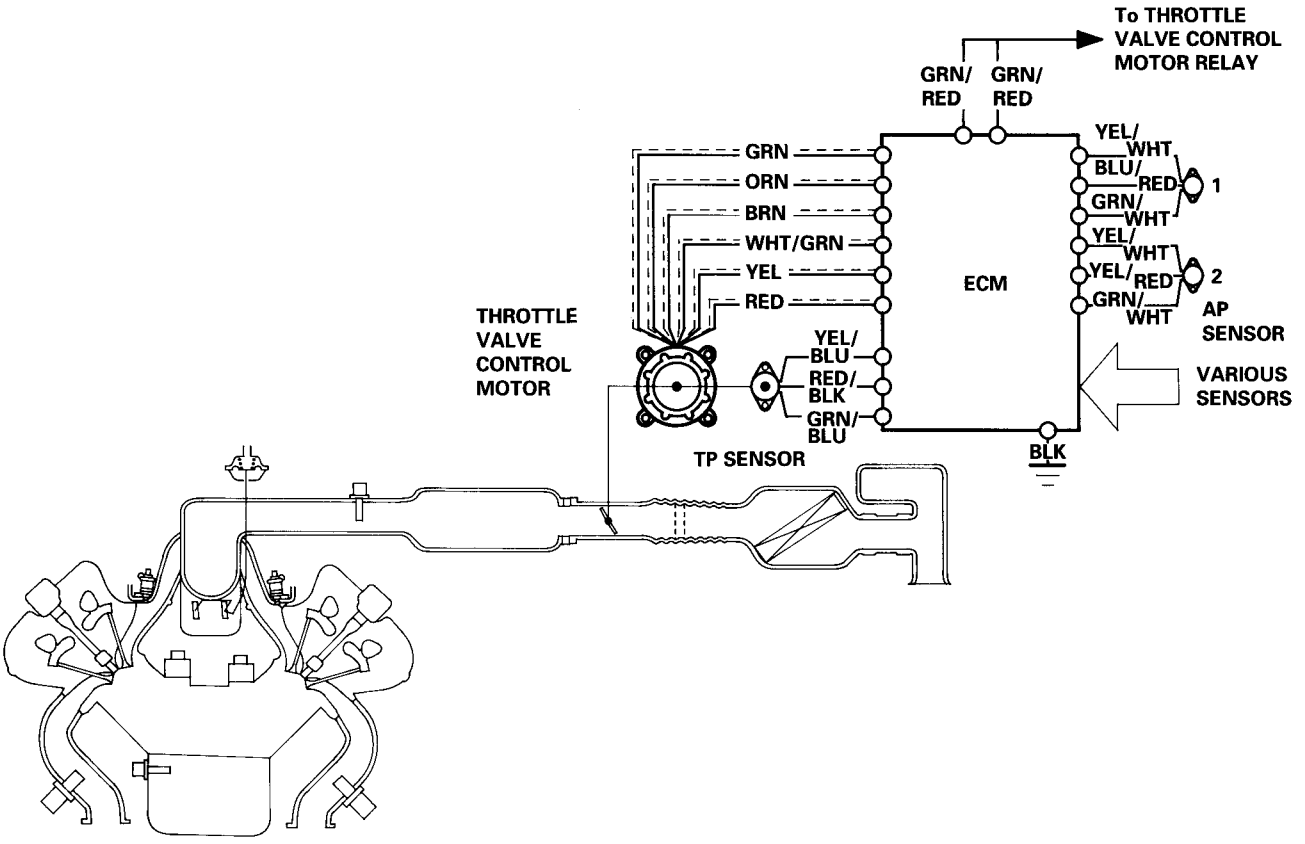

Drive By Wire System Functions:

Idle Control Function
When the engine is idling, the ECM controls the throttle valve control motor to maintain the proper idle speed according to engine loads.

Acceleration Control Function
When the accelerator pedal is depressed, the ECM opens the throttle valve depending on the accelerator position sensor signals.

(cont'd)

System Description (cont'd)

Cruise Control Function

The ECM controls the throttle valve control motor to maintain the set speed when the cruise control system is operating. The throttle valve control motor takes the place of the cruise control actuator.

Traction Control System (TCS) Function

If wheel spin occurs during acceleration or cornering, the TCS control unit requests the ECM to reduce the engine power by retarding the ignition timing and closing the throttle valve. If the wheels lock during deceleration, the TCS control unit signals the ECM to open the throttle valve.

Engine Protection Function

When the engine speed exceeds 8,000 rpm (M/T) or 7,500 rpm (A/T), the ECM controls the throttle valve, regardless of the accelerator position, to protect the engine from over-revving.

Fail-safe Function

On this system, the ECM monitors the position of the accelerator pedal with a dual circuit type accelerator position sensor, and monitors the operation of the throttle valve control motor with a Throttle Position (TP) sensor.
When an abnormality occurs in the system, the ECM restricts the operation of the throttle valve control motor to allow the engine to continue to run.

Idle Control System

Air Conditioning Signal

This signals the ECM when there is a demand for cooling from the air conditioning system.

Inspection of Air Conditioning Signal.

Check for a short in the wire (ACS line):
1. Turn the ignition switch OFF.
2. Disconnect the 12P connector from the cooling fan control unit.
3. Turn the ignition switch ON (II).
4. Measure voltage between ECM connector terminals C2 and A26.

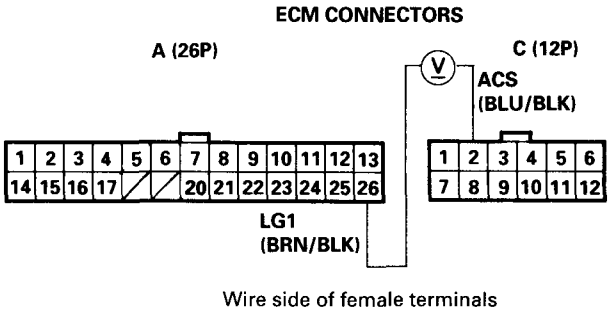

Wire side of female terminals

Is there approx. 10 V?

NO

Check for a short in the wire (ACS line):
1. Turn the ignition switch OFF.
2. Disconnect the ECM connector C (12P) from the ECM.
3. Check for continuity between ECM connector terminal C2 and body ground.

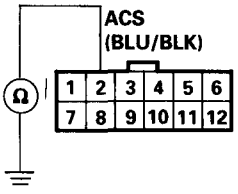

Is there continuity?

YES

— **Repair short in the wire between the ECM (C2) and the cooling fan control unit.**
— **See the air conditioner inspection (see section 22).**

NO

— **Substitute a known-good ECM and recheck (see page 11-39 for immobilizer information). If prescribed voltage is now available, replace the original ECM.**
— **See the air conditioner inspection (see section 22).**

YES

Check for an open in the wire (ACS line):
1. Turn the ignition switch OFF.
2. Reconnect the 12P connector to the cooling fan control unit.
3. Turn the ignition switch ON (II).
4. Momentarily connect ECM connector terminals A8 to A26 several times with a jumper wire.

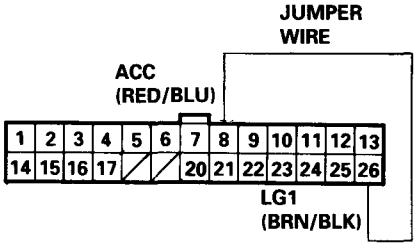

(To page 11-119)

(From page 11-118)

Is there a clicking noise from the A/C compressor clutch?

NO

Check for an open in the wire:
Momentarily connect the No. 4 terminal of the 4P connector on the A/C clutch relay to body ground several times.

A/C CLUTCH RELAY 4P CONNECTOR

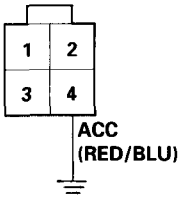

Wire side of female terminals

Is there a clicking noise from the A/C compressor clutch?

NO

See air conditioner inspection (see section 22).

YES

Repair open in the wire between the ECM (AS) and the A/C clutch relay.

YES

Check the A/C operation:
1. Start the engine.
2. Turn the blower switch ON.
3. Turn the A/C switch ON.

ECM CONNECTORS

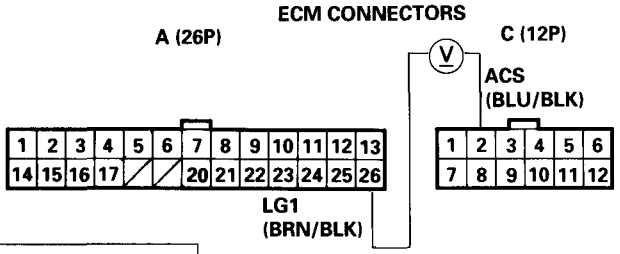

Wire side of female terminals

Does the A/C operate?

NO

Check for an open in the wire (ACS line):
Measure voltage between ECM connector terminals C2 and A26.

YES

Air conditioning signal is OK.

Is voltage less than 1.0 V?

NO

Repair open in the wire between the ECM (C2) and the A/C switch.

YES

— **Substitute a known-good ECM and recheck (see page 11-39 for immobilizer information). If symptom/indication goes away, replace the original ECM.**
— **See the air conditioner inspection (see section 22).**

Alternator (ALT) FR Signal

This signals the ECM when the Alternator (ALT) is charging.

Inspection of ALT FR Signal.

Check for a short in the wire (ALTF line):
1. Disconnect the GRN 4P connector from the ALT.
2. Turn the ignition switch ON (II).
3. Measure voltage between ECM connector terminals D5 and A26.

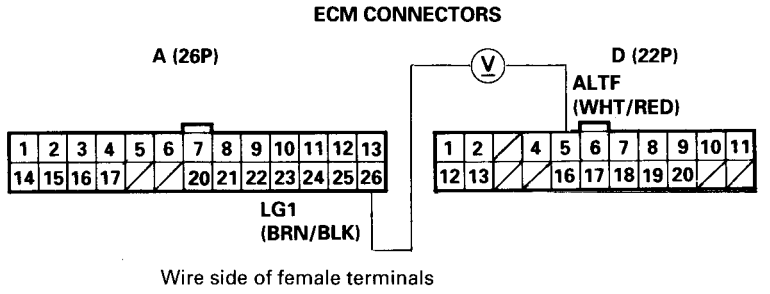

Is there approx. 5 V?

NO

Check for a short in the wire (ALTF line):
1. Turn the ignition switch OFF.
2. Disconnect the negative battery cable from the battery.
3. Disconnect the ECM connector D (22P) from the ECM.
4. Check for continuity between ECM connector terminal D5 and body ground.

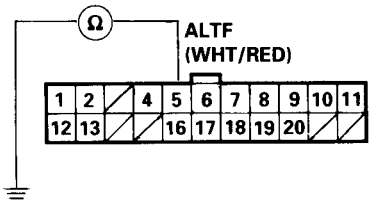

Is there continuity?

YES

Repair short in the wire between the ECM (D5) and the ALT.

NO

Substitute a known-good ECM and recheck (see page 11-39 for immobilizer information). If prescribed voltage is now available, replace the original ECM.

YES

Check the operation of the ALT:
1. Turn the ignition switch OFF.
2. Reconnect the ALT GRIM 4P connector to the ALT.
3. Start the engine. Hold the engine at 3,000 rpm with no load (A/T in [N] or [P] position, M/T in neutral) until the radiator fan comes on, then let it idle.
4. Measure voltage between ECM connector terminals D5 and A26.

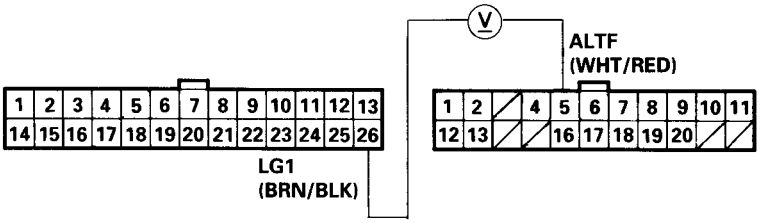

Does the voltage decrease when headlights and rear defogger are turned on?

YES

ALT FR signal is OK.

NO

(To page 11-121)

(From page 11-120)

Check for an open in the wire (ALTF line):
1. Turn the ignition switch OFF.
2. Disconnect the negative battery cable from the battery.
3. Disconnect the ECM connector D (22P) from the ECM.
4. Disconnect the GRN 4P connector from the ALT.
5. Connect No. 2 terminal to body ground with a jumper wire.
6. Check for continuity between ECM connector terminal D5 and body ground.

Is there continuity?

NO → **Repair open in the wire between the ECM (D5) and the ALT.**

YES → **See the ALT inspection (see section 23).**

ALT GRN 4P CONNECTOR

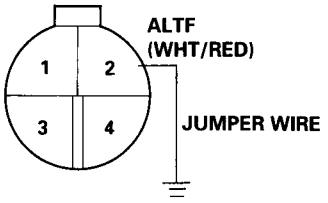

Wire side of female terminals

ECM CONNECTOR D (22P)

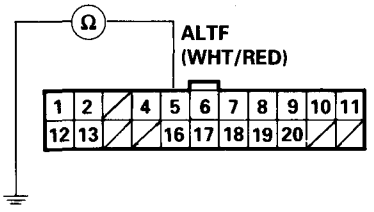

Wire side of female terminals

Idle Control System

Automatic Transaxle (A/T) Gear Position Signal

This signals the ECM when the transmission is in [N] or [P] position.

Inspection of A/T Gear Position Signal.

Check the operation of the A/T gear position switch:
1. Turn the ignition switch ON (II).
2. Observe the A/T shift position indicator and select each position separately.

Does the indicator light properly?

NO → **See the A/T gear position indicator inspection (see section 14).**

YES

Check for a short in the wire (ATF PN line):
1. Turn the ignition switch OFF.
2. Disconnect the SOP (C412) connector from the gauge assembly.
3. Disconnect the 26P connector from the TCM.
4. Turn the ignition switch ON (II).
5. Measure voltage between ECM connector terminals B4 and A26.

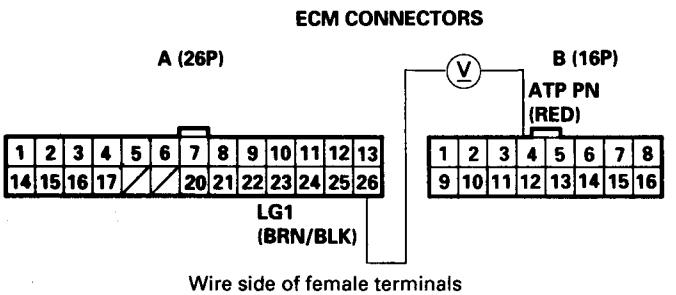

Is there approx. 5V?

NO → **Check for a short in the wire (ATF ON line):**
1. Turn the ignition switch OFF.
2. Disconnect the ECM connector B (16P) from the ECM.
3. Check for continuity between ECM connector terminal B4 and body ground.

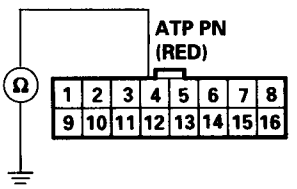

Is there continuity?

YES → **Repair short in the wire between the ECM (B4) and the gauge assembly.**

NO → **Substitute a known-good ECM and recheck (see page 11-39 for immobilizer information). If prescribed voltage is now available, replace the original ECM.**

(To page 11-123)

(From page 11-122)

Check for an open in the wire (ATF PN line):
1. Turn the ignition switch OFF.
2. Reconnect the 30P (C412) connector to the gauge assembly.
3. Reconnect the 26P connector to the TCM.
4. Start the engine.
5. Measure voltage between ECM connector terminals B4 and A26 with the transmission in N position.

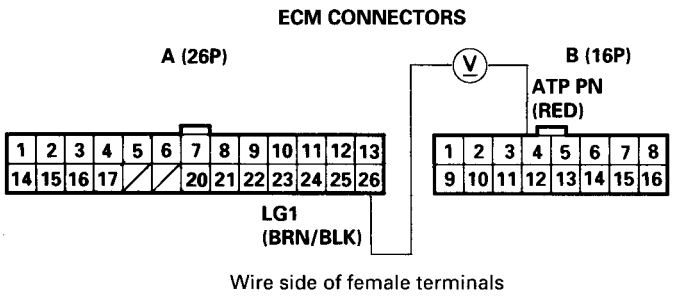

Is there less than 1.0 V?

NO

- **Repair open in the wire between the ECM (B4) and the gauge assembly.**
- **Repair open in GRN wire between the gauge assembly and the A/T gear position switch.**

YES

Check for an open in the wire (ATP PN line):
Measure voltage between ECM Connector terminals B4 and A26 with the transmission in P position.

Is there less than 1.0V?

NO

Repair open in GRN/WHT wire between the gauge assembly and the A/T gear position switch.

YES

A/T gear position signal is OK.

Idle Control System

Neutral Switch Signal (M/T)

This signals the ECM when the transmission is in neutral.

Inspection of neutral switch signal.

Check for an open in the wire (NTSW line):
1. Turn the ignition switch ON (II).
2. Measure voltage between ECM connector terminals B4 and A26.

Is there voltage?

YES

Check for an open in the wire (NTSW line):
1. Turn the ignition switch OFF.
2. Disconnect the 3P connector from the neutral switch.
3. Connect neutral switch connector terminals No. 1 to No. 3.
4. Turn the ignition switch ON (II).
5. Measure voltage between ECM connector terminals B4 and A26.

Is there voltage?

NO

Replace the neutral switch (see section 13).

YES

— Repair open in the wire between the ECM (B4) and the neutral switch.
— Repair open in BLK wire between the neutral switch and G101 (located at right middle of engine).

NO

Check for a short in the wire (NTSW line):
1. Shift transmission into gear.
2. Measure voltage between ECM connector terminals B4 and A26.

Is there approx. 5 V?

NO

Check for a short in the wire (NTSW line):
1. Turn the ignition switch OFF.
2. Disconnect the ECM connector B (16P) from the ECM.
3. Disconnect the 3P connector from the neutral switch.
4. Check for continuity between ECM connector terminal B4

YES

Neutral switch signal is OK.

Is there continuity?

YES

Repair short in the wire between the ECM (B4) and the neutral switch.

NO

— Replace neutral switch (see section 13).
— Substitute a known-good ECM and recheck (see page 11-39 for immobilizer information). If prescribed voltage is now available, replace the original ECM.

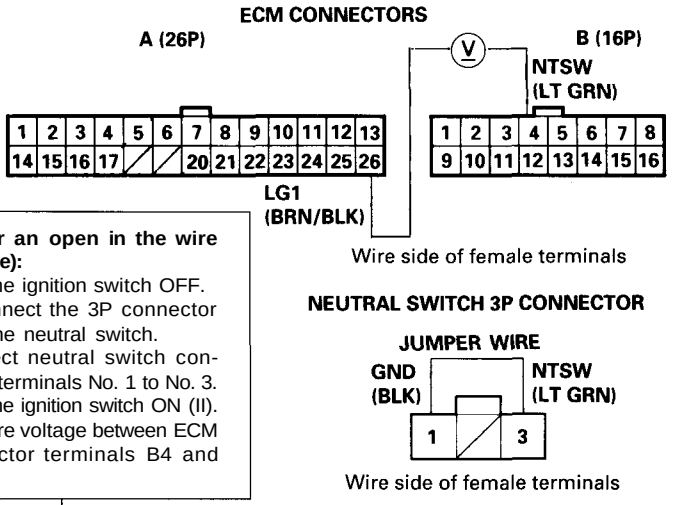

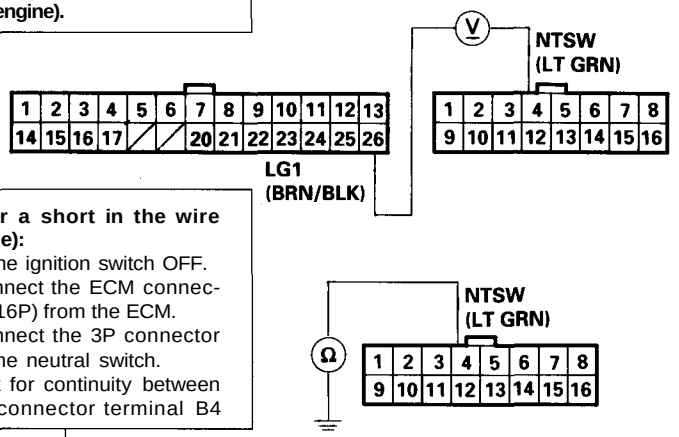

Clutch Switch Signal (M/T)

This signals the ECM when the clutch is engaged.

Inspection of clutch switch signal.

Check for an open in the wire (MTCLS line):
1. Turn the ignition switch ON (II).
2. Measure voltage between ECM connector terminals C4 and A26.

Is voltage less than 1.0 V?

NO

Check the clutch switch:
1. Turn the ignition switch OFF.
2. Disconnect the 3P connector from the clutch switch.
3. Check for continuity between the clutch switch connector terminals No. 1 and No. 3.

Is there continuity?

NO

— **Adjust the clutch switch.**
— **Replace the clutch switch.**

YES

Check for an open in the wire (MTCLS line):
1. Turn the ignition switch ON (II).
2. Measure voltage between the clutch switch connector terminal No. 1 and body ground.

Is there approx. 5 V?

NO

Repair open in the wire between the ECM (C4) and the clutch switch.

YES

Repair open in BLK wire between the clutch switch and G401 (located behind left kick panel).

YES

Check for short in the wire (MTCLS line):
1. Depress the clutch pedal.
2. Measure voltage between ECM connector terminals C4 and A26.

(To page 11-126)

ECM CONNECTORS

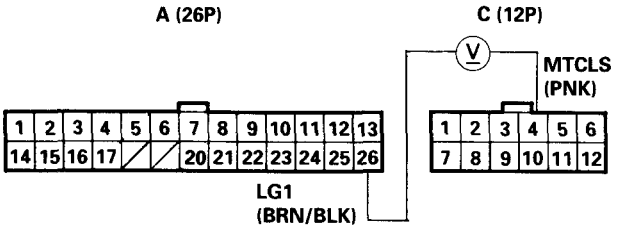

Terminal side of male terminals

CLUTCH SWITCH 3P CONNECTOR

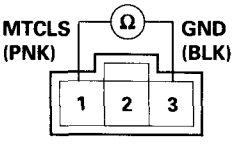

Wire side of female terminals

CLUTCH SWITCH 3P CONNECTOR

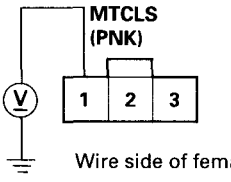

Wire side of female terminals

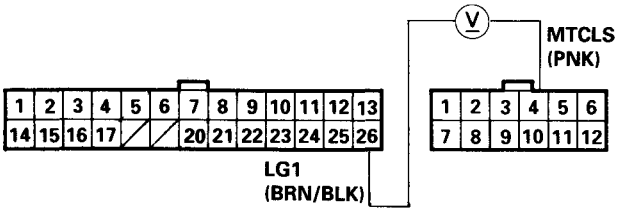

(cont'd)

Clutch Switch Signal (M/T) (cont'd)

(From page 11-125)

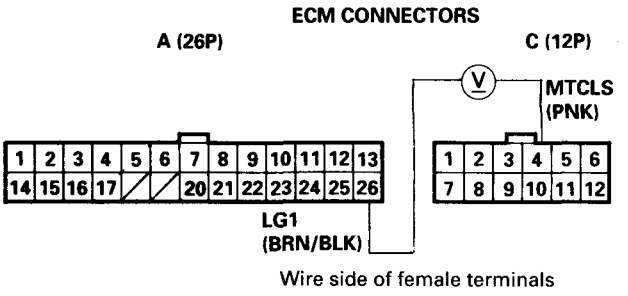

Is there approx. 5 V?

NO

Check the clutch switch:
1. Turn the ignition switch OFF:
2. Disconnect the 3P connector from the clutch switch.
3. Turn the ignition switch ON (II).
4. Measure voltage between ECM connector terminals C4 and A26 with the clutch pedal depressed.

YES

Clutch switch signal is OK.

Is there approx. 5 V?

YES

Replace the clutch switch.

NO

Check for a short in the wire (MTCLS line):
1. Turn the ignition switch OFF.
2. Disconnect the ECM connector C (12P) from the ECM.
3. Check for continuity between ECM connector terminal C4 and body ground.

Is there continuity?

YES

Repair short in the wire between the ECM (C4) and the clutch switch.

NO

Substitute a known-good ECM and recheck (see page 11-39 for immobilizer information). If prescribed voltage is now available, replace the original ECM.

Brake Switch Signal

This signals the ECM when the brake pedal is depressed.

Inspection of Brake Switch Signal.

Are the brake lights on without depressing the brake pedal?

YES → **Inspect the brake switch (see section 19).**

NO

Depress the brake pedal.

Do the brake lights come on?

NO → Inspect the BRAKE LIGHT SW HORN (20 A) fuse in the under-hood fuse/relay box.

YES

Is the fuse OK?

NO →
- **Repair short in the wire between the brake switch and the BRAKE LIGHT SW HORN (20 A) fuse.**
- **Replace the BRAKE LIGHT SW HORN (20 A) fuse.**

YES →
- **Repair open in the wire between the brake switch and the BRAKE LIGHT SW HORN (20 A) fuse.**
- **Inspect the brake switch (see section 19).**

Check for an open in the wire (BKSW line):
1. Depress the brake pedal.
2. Measure voltage between ECM connector terminals F16 and A26 with the brake pedal depressed.

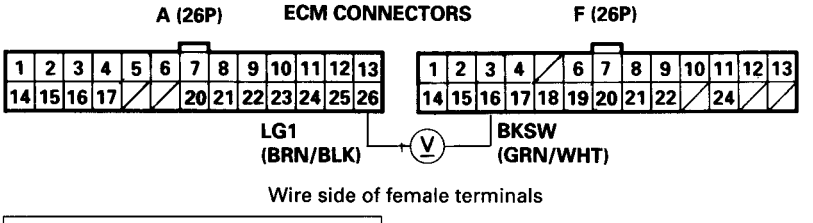

Is there battery voltage?

NO → **Repair open in the wire between the ECM (F16) and the brake switch.**

YES

Brake switch signal is OK.

Idle Control System

Starter Switch Signal

This signals the ECM when the engine is cranking.

Inspection of Starter Switch Signal.

NOTE:
- M/T: Clutch pedal must be depressed.
- A/T: Transmission in [N] or [P] position.

Check for an open or short in the wire (STS line):
Measure voltage between ECM connector terminals C6 and A26 with the ignition switch in the start (III) position.

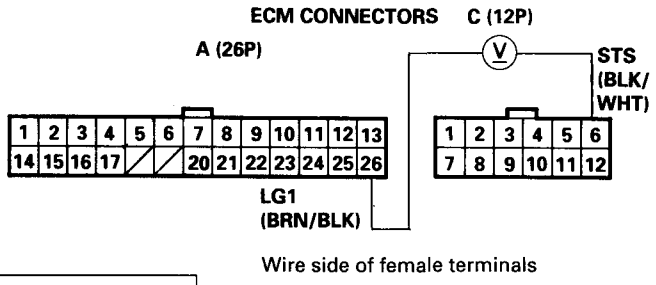

Is there battery voltage?

NO → Inspect the No. 7 STARTER SIGNAL (7.5 A) fuse in the under-dash fuse box.

YES → **Starter switch signal is OK.**

Is the fuse OK?

NO → **— Repair short in the wire between the ECM (C6) and the No. 7 STARTER SIGNAL (7.5 A) fuse or the PGM-FI main relay.**
— Replace the No. 7 STARTER SIGNAL (7.5 A) fuse.

YES → **Repair open in the wire between the ECM (C6) and the No. 7 STARTER SIGNAL (7.5 A) fuse.**

Idle Speed Setting

Inspection/Adjustment

NOTE: Before setting the idle speed, check the these items:
- — The MIL has not been reported on.
- — Ignition timing
- — Spark plugs
- — Air cleaner
- — PCV system

1. Start the engine. Hold the engine at 3,000 rpm with no load (A/T in [N] or [P] position, M/T in neutral) until the radiator fan comes on, then turn the ignition switch OFF.

2. Connect the SCS service connector to service check connector.

3. Connect a OBDII scan tool (see page 11-38) or tachometer.
   - Connect a tachometer to loop of igniter unit secondary, or...

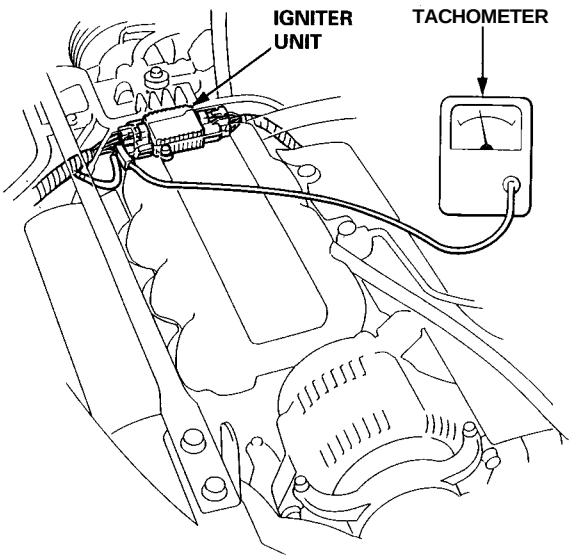

   - Remove the rubber cap from the tachometer connector and connect a tachometer.

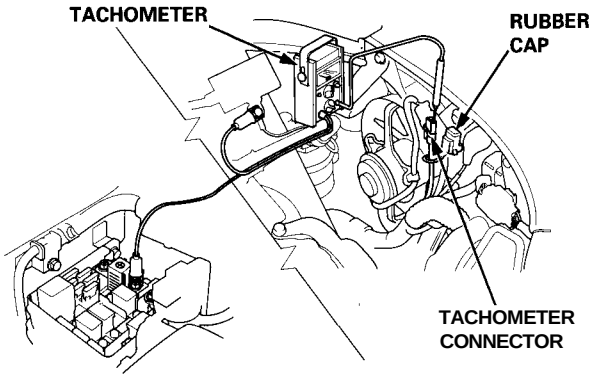

4. Restart the engine.

5. Check idling in no-load conditions in which the headlights, blower fan, rear defogger, cooling fan, and air conditioner are not operating. Do not depress the accelerator pedal.

Idle speed should be:

M/T	600 ± 50 rpm
A/T	600 ± 50 rpm (in [N] or [P] position)

Adjust the idle speed, if necessary, by turning the idle adjusting screw. After adjusting the idle speed, check the ignition timing (see section 23). If it is out of spec, go back to step 4.

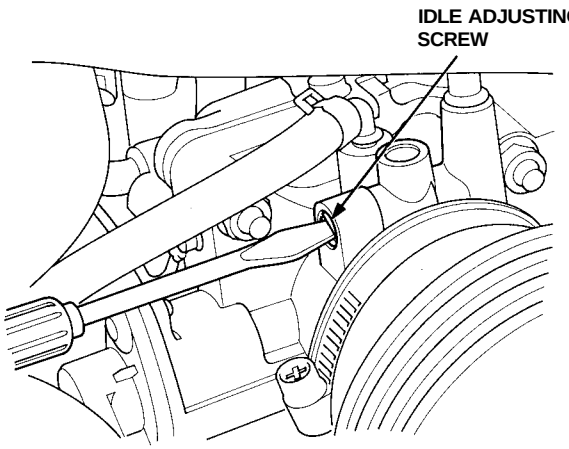

6. Disconnect the SCS service connector.

7. Depress the accelerator pedal and stabilize the engine speed at 1,000 rpm, then slowly release the pedal until the engine idles, then check the idle speed.

Idle speed should be:

M/T	800 ± 50 rpm
A/T	780 ± 50 rpm (in [N] or [P] position)

Fuel Supply System

Fuel Lines

Check fuel system lines, hoses, connections and components for damage, leaks or deterioration, and replace if necessary.

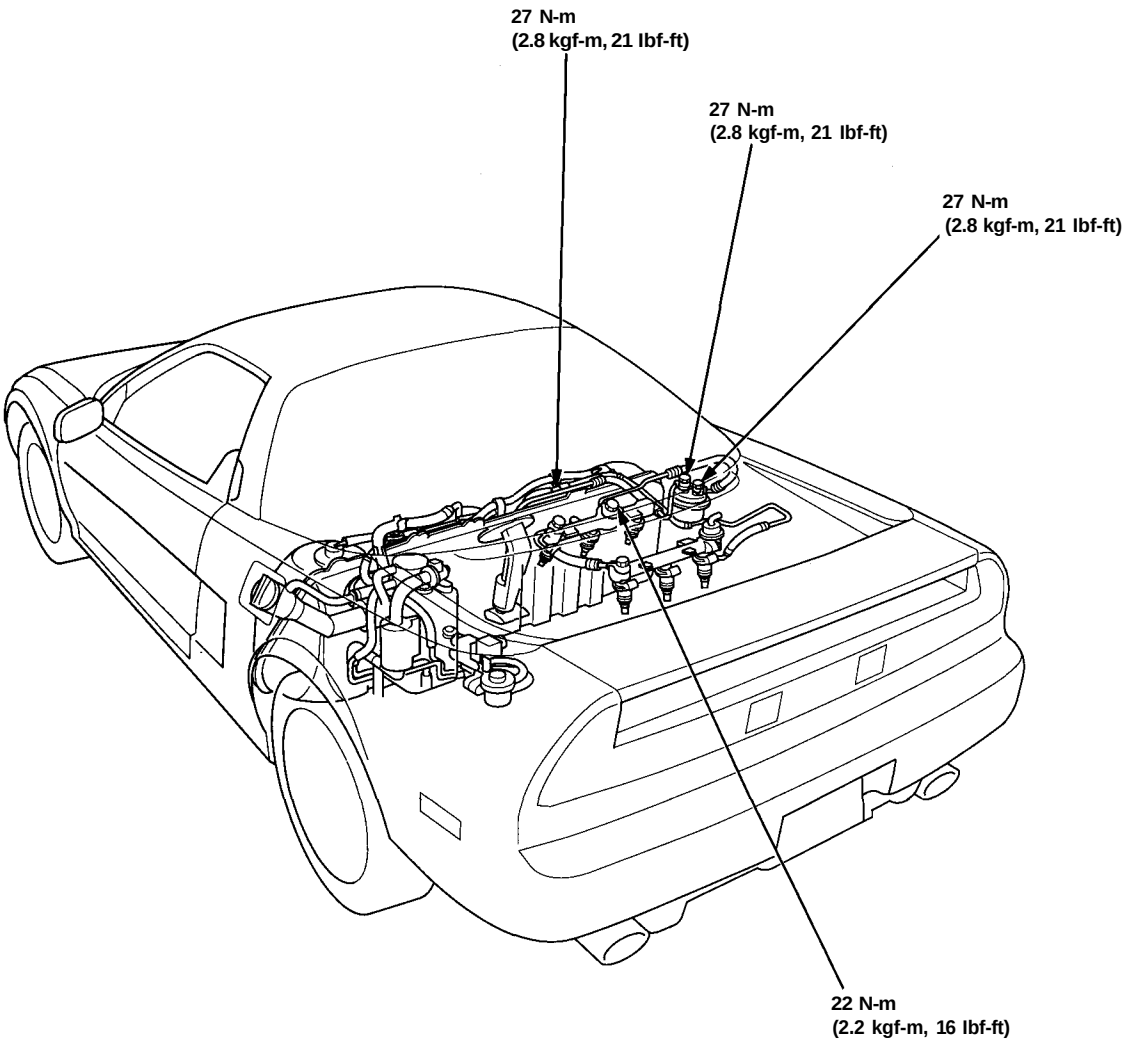

Check all hose clamps and retighten if necessary.

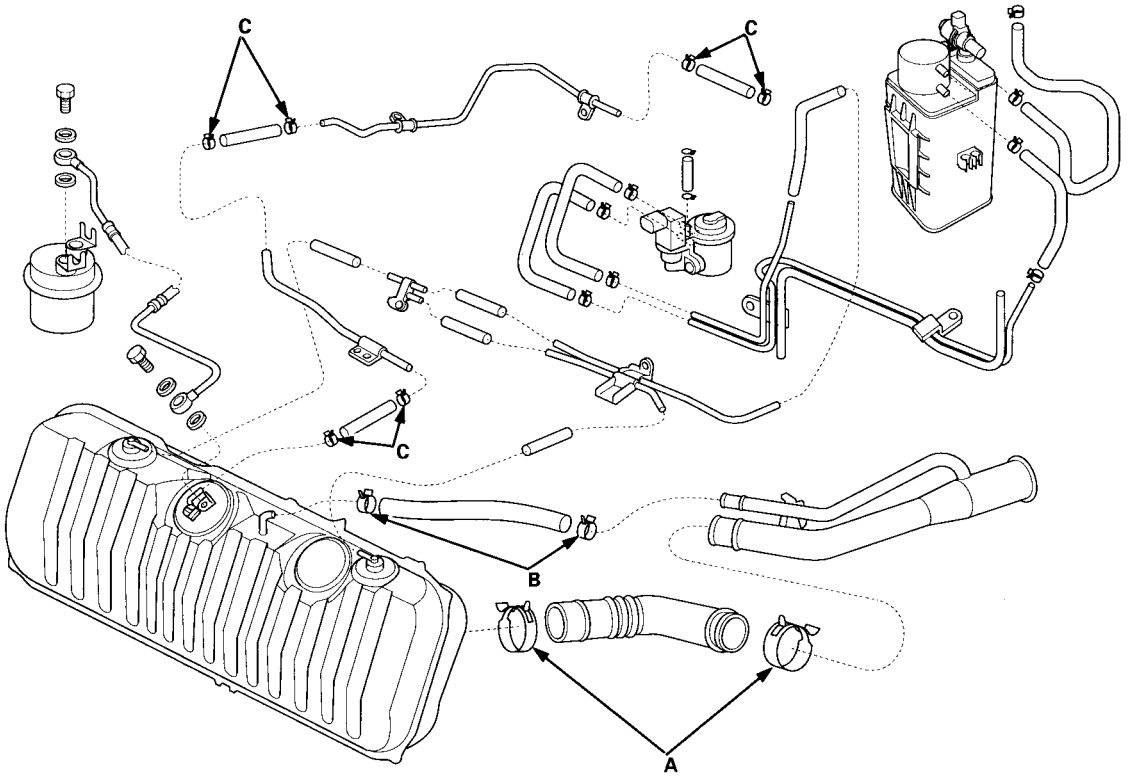

A

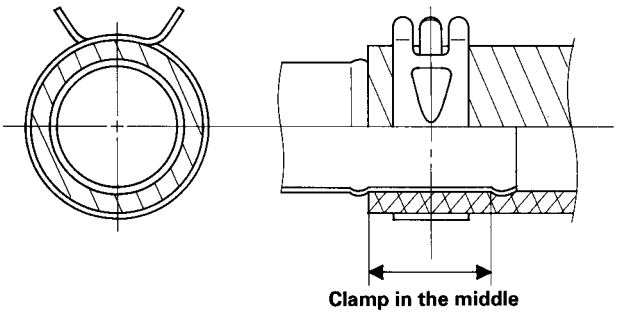

B

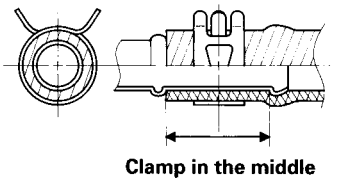

C

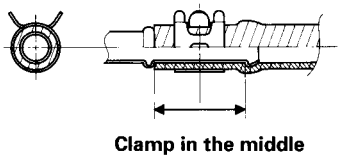

Fuel Supply System

System Description

The fuel supply system consists of a fuel tank, in-tank high-pressure fuel pump, fuel pump relay, fuel pump resistor PGM-FI main relay, fuel filter, fuel pressure regulator, fuel injectors, injector resistor (A/T), and fuel delivery and return lines. This system delivers pressure-regulated fuel to the fuel injectors and cuts the fuel delivery when the engine is not running.

Fuel Pressure

Relieving

Before disconnecting fuel pipes or hoses, release pressure from the system by loosening the 6 mm service bolt on top of the fuel filter.

⚠ WARNING

- Do not smoke while working on the fuel system. Keep open flames or sparks away from your work area.
- Be sure to relieve fuel pressure while the ignition switch is off.

1. Disconnect the battery negative cable from the battery negative terminal.
2. Remove the fuel fill cap.
3. Place a box end wrench on the 6 mm service bolt at the fuel filter, and hold the special banjo bolt with another wrench.
4. Place a rag or shop towel over the 6 mm service bolt.
5. Slowly loosen the 6 mm service bolt one complete turn.

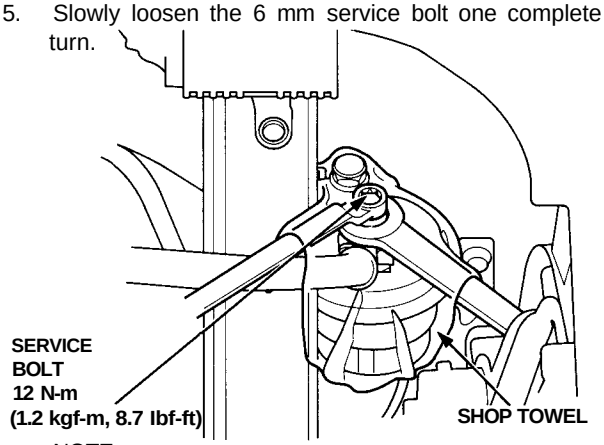

NOTE:

- A fuel pressure gauge can be attached at the 6 mm service bolt hole.
- Always replace the washer between the service bolt and the special banjo bolt whenever the service bolt is loosened.
- Replace all washers whenever the bolts are removed.

Inspection

1. Relieve fuel pressure (see page 11-132)

2. Remove the service bolt on the fuel filter while holding the banjo bolt with another wrench. Attach the special tool (see page 11-38).

3. Start the engine. Measure the fuel pressure with the engine idling and the vacuum hose of the fuel pressure regulator disconnected from the fuel pressure regulator and pinched. If the engine will not start, turn the ignition switch on (II) wait for two seconds, turn it off, then back on again and read the fuel pressure.

   Pressure should be:
   324 - 363 kPa (3.3 - 3.7 kgf/cm^2, 47 - 53 psi)

4. Reconnect vacuum hose to the fuel pressure regulator.

   Pressure should be:
   250 - 304 kPa (2.55 - 3.1 kgf/cm^2, 36 - 44 psi)

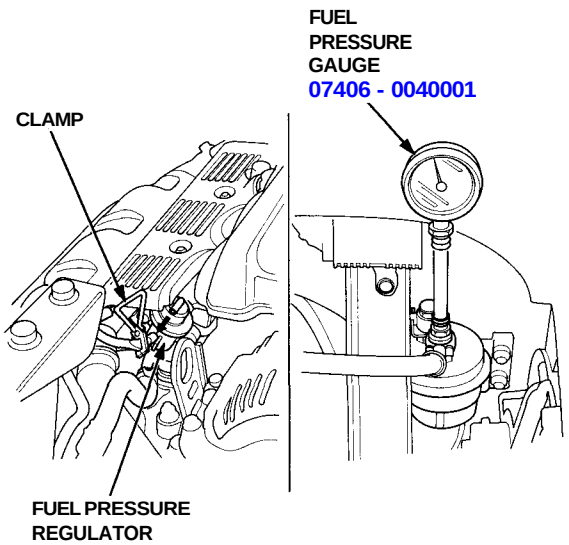

If the fuel pressure is not as specified, first check the fuel pump (see page 11-142). If the fuel pump is OK, check the following:

- If the fuel pressure is higher than specified, inspect for:
  - Pinched or clogged fuel return hose or line.
  - Faulty fuel pressure regulator (see page 11-137).
  - Faulty fuel pump relay (see page 11-139).
- If the fuel pressure is lower than specified, inspect for:
  - Clogged fuel filter.
  - Faulty fuel pressure regulator (see page 11-137).
  - Leakage in the fuel line.
  - Faulty fuel pump relay (see page 11-139).

Fuel Injectors

Replacement

⚠ WARNING **Do not smoke during the work. Keep open flames away from your work area.**

1. Relieve fuel pressure (see page 11-132).
2. Remove the intake manifold covers.
3. Disconnect the connectors from the fuel injectors and the IAT sensor.
4. Place a rag or shop towel over the vacuum hose and fuel return hose, then disconnect them from the fuel pressure regulator.
5. Disconnect the fuel hose from the fuel rail.
6. Remove the retainer nuts from the fuel rail and harness holder.
7. Disconnect the fuel rail.
8. Remove the fuel injectors from the intake manifold.

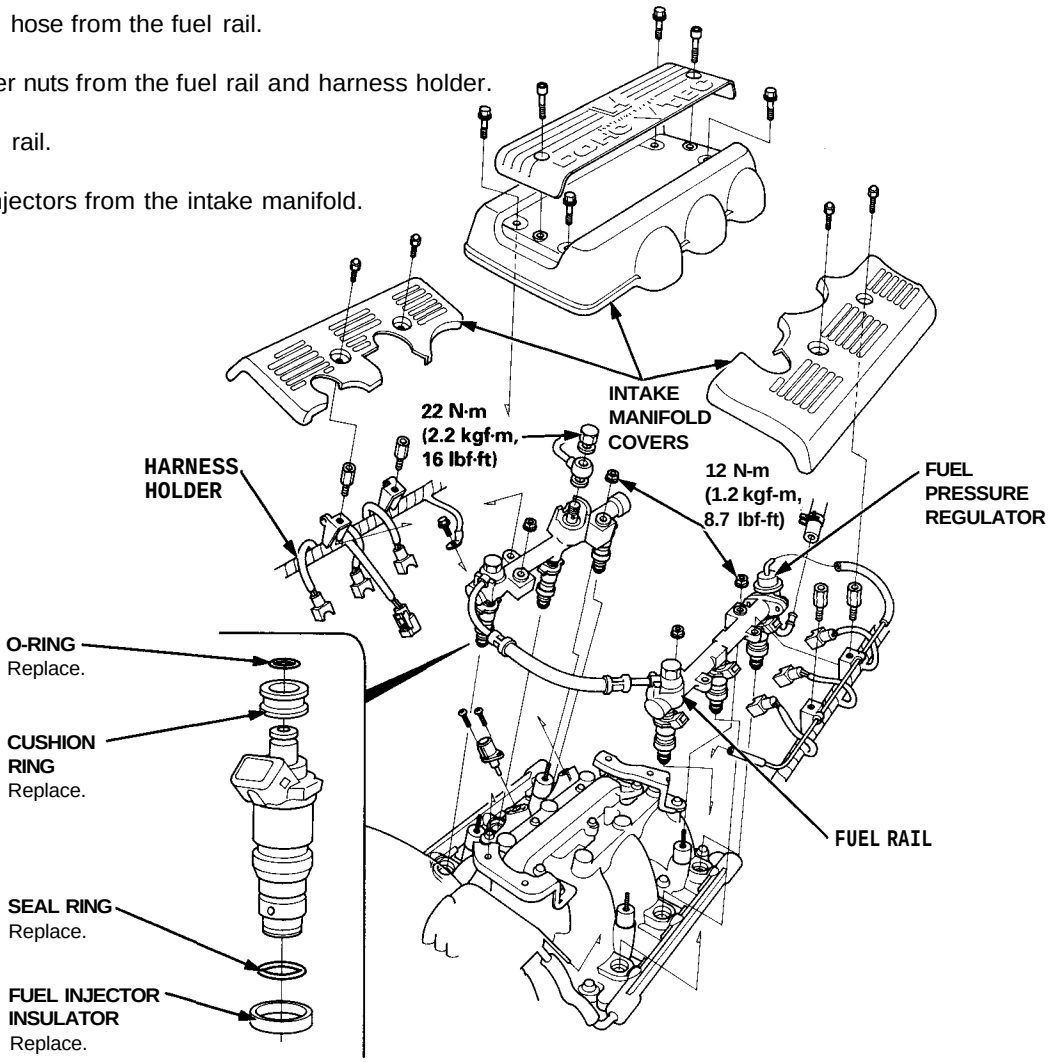

9. Slide new cushion rings onto the fuel injectors.
10. Coat new O-rings with clean engine oil, and put them on the fuel injectors.
11. Insert the fuel injectors into the fuel rail first.
12. Coat new seal rings with clean engine oil, and press them into the intake manifold.

13. To prevent damage to the O-rings, install the fuel injectors in the fuel rail first, then install them in the intake manifold.

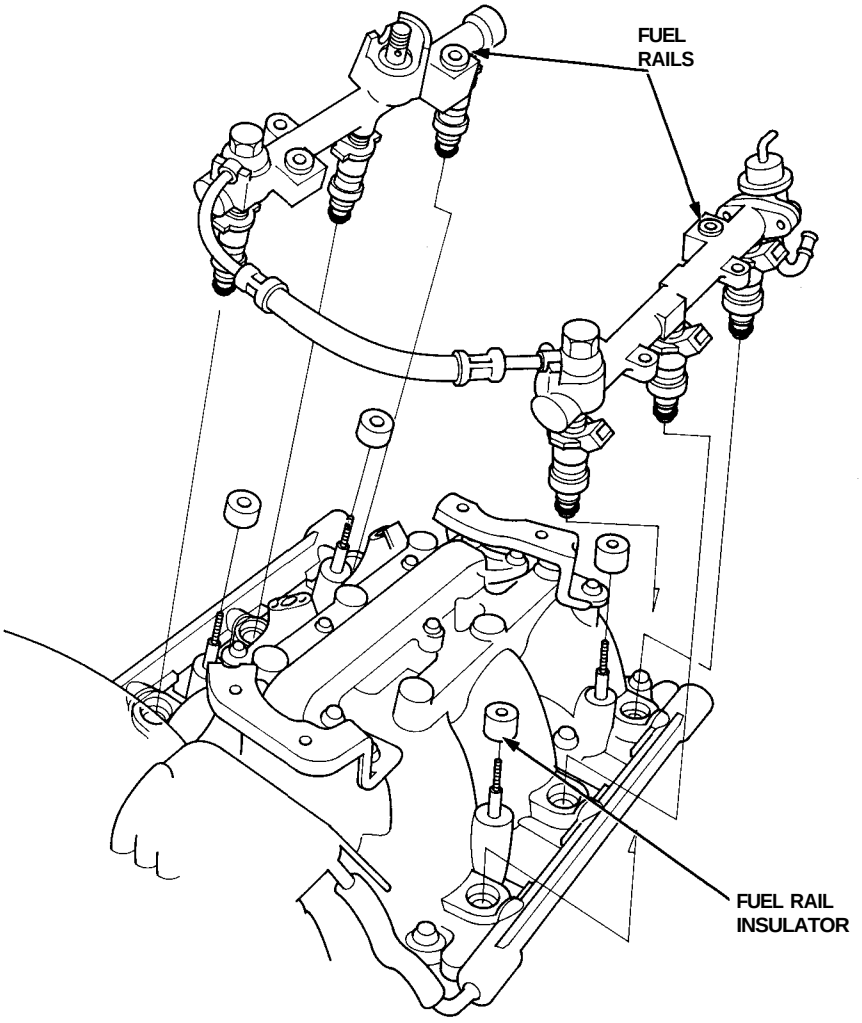

14. Align the center line on the connector with the mark on the fuel rail.

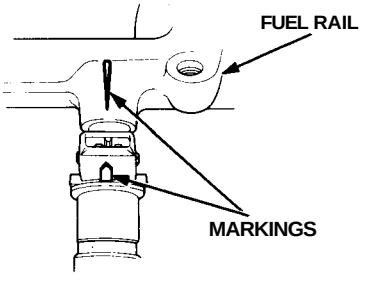

15. Install and tighten the retainer nuts.

16. Connect the fuel hose to the fuel rail.

17. Connect the vacuum hose and fuel return hose to the fuel pressure regulator.

18. Install the connectors on the fuel injectors and the IAT sensor.

19. Install the intake manifold covers.

20. Turn the ignition switch ON (II), but do not operate the starter. After the fuel pump runs for approximately two seconds, the fuel pressure in the fuel line rises. Repeat this two or three times, then check whether there is any fuel leakage.

Fuel Injector Resistor (A/T)

Description

The fuel injector resistor lowers the current supplied to the fuel injectors to prevent damage to the fuel injector coils. This allows a faster response time of the fuel injectors.

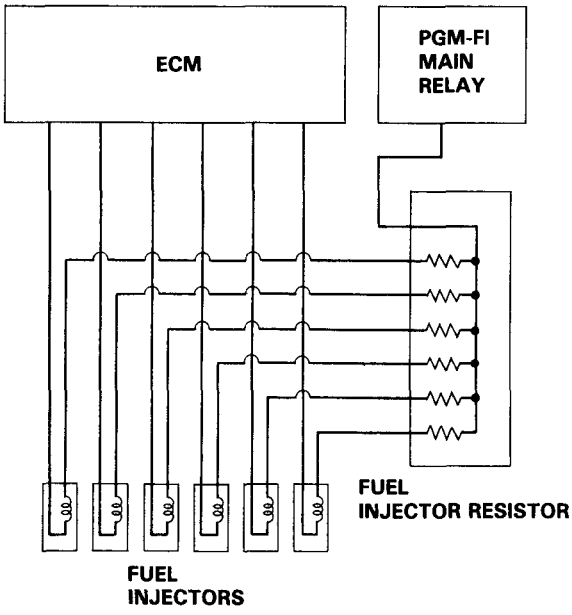

Testing

1. Disconnect the fuel injector resistor connector.
2. Check for resistance between each of the fuel injector resistor terminals (2, 3, 4, 6, 7 and 8) and the power terminal (5).

Resistance should be: 5 – 7 Ω

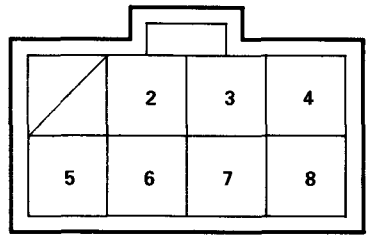

Terminal side of male terminals

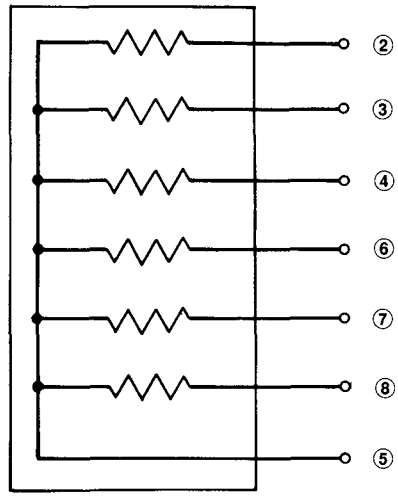

Replace the fuel injector resistor with a new one if any of the resistances are outside of the specification.

Fuel Pressure Regulator

Description

The fuel pressure regulator maintains a constant fuel pressure to the fuel injectors. When the difference between the fuel pressure and manifold pressure exceeds 343 kPa (3.5 kgf/cm^2, 50 psi), the diaphragm is pushed upward, and the excess fuel is fed back into the fuel tank through the fuel return pipe.

CLOSED

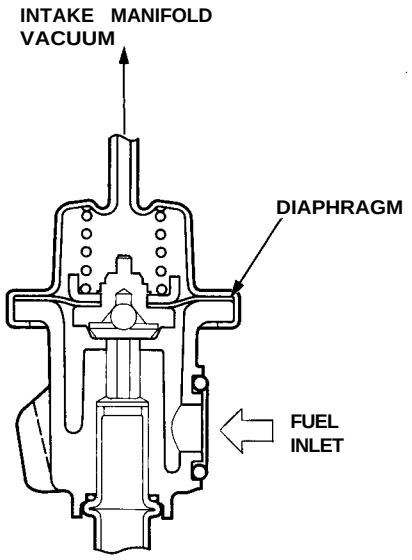

OPEN

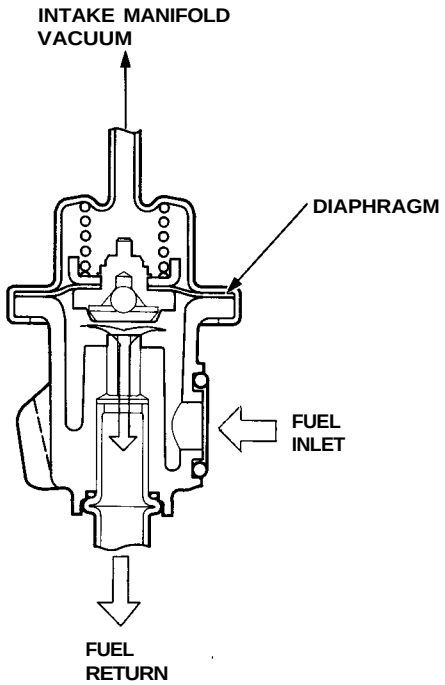

Testing

⚠ WARNING Do not smoke during the test. Keep open flames away from your work area.

1. Attach the special tool to the service port of the fuel filter (see page 11-133).

   Pressure should be:
   324 - 363 kpa (3.3 - 3.7 kgf/cm^2, 47 - 53 psi)
   (with the fuel pressure regulator vacuum hose disconnected and pinched)

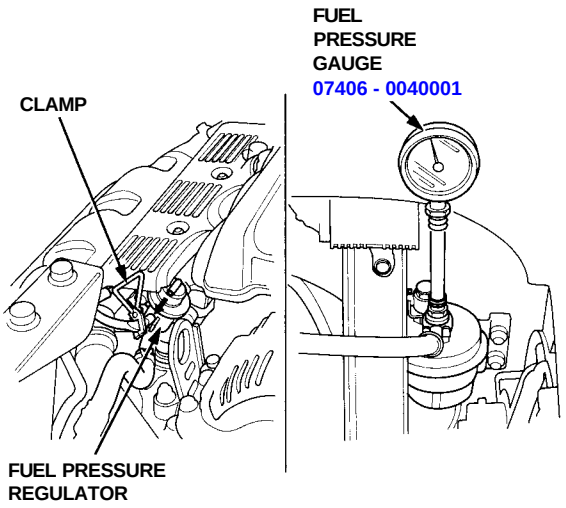

2. Reconnect the vacuum hose to the fuel pressure regulator.

3. Check that the fuel pressure rises when the vacuum hose from the fuel pressure regulator is disconnected again.

   If the fuel pressure did not rise, replace the fuel pressure regulator.

(cont'd)

Fuel Pressure Regulator (cont'd)

Replacement

⚠ WARNING Do not smoke while working on fuel system. Keep open flame away from your work area.

1. Place a shop towel under fuel pressure regulator, then relieve fuel pressure (see page 11-132).
2. Disconnect the vacuum hose and fuel return hose.
3. Remove the two 6 mm retainer bolts.

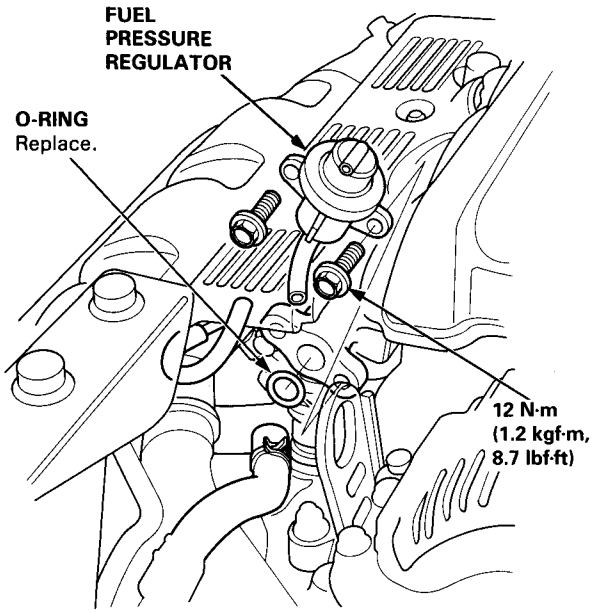

4. Install the fuel pressure regulator in the reverse order of removal, and note these items:
   - Replace the O-ring.
   - Apply clean engine oil to the O-ring and assemble it into its proper position, taking care not to damage the O-ring.

Fuel Filter

Replacement

⚠ WARNING Do not smoke while working on fuel system. Keep open flame away from your work area.

The fuel filter should be replaced every 4 years or 60,000 miles (96,000 km), whichever comes first, or whenever the fuel pressure drops below the specified value [324 - 363 kPa (3.3 - 3.7 kgf/cm^2, 47 - 53 psi) with the fuel pressure regulator vacuum hose disconnected] after making sure that the fuel pump and the fuel pressure regulator are OK.

1. Place a shop towel under and around the fuel filter.
2. Relieve fuel pressure (see page 11-132).
3. Remove the 12 mm banjo bolt and the fuel feed pipe from the filter.
4. Remove the fuel filter clamp and fuel filter.
5. When assembling, use new washers as shown.

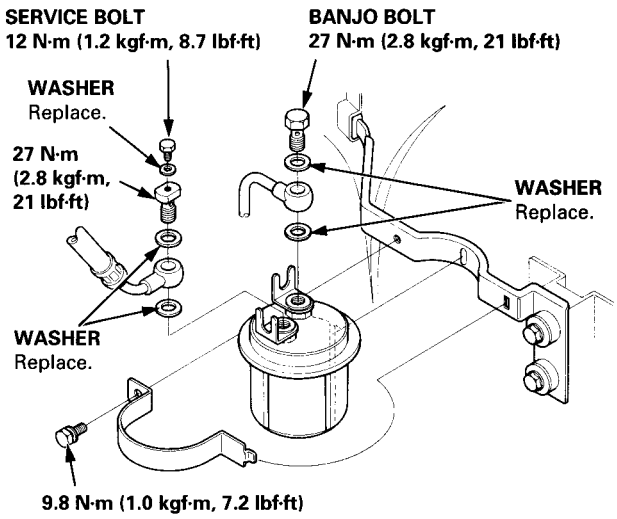

Fuel Pump

Testing

⚠ WARNING Do not smoke during the test. Keep open flame away from your work area.

If you suspect a problem with the fuel pump, check that the fuel pump actually runs. When it is ON, you will hear some noise if you hold your ear to the fuel fill port with the fuel fill cap removed. The fuel pump should run for two seconds when the ignition switch is first turned on. If the fuel pump does not make noise, check as follows:

1. Remove the bulkhead panels.
2. Turn the ignition switch OFF, then disconnect the C486 (6P) connector (located behind the bulkhead panels).
3. Disconnect the PGM-FI main relay connector and connect the No. 2 terminal and No. 5 terminal* with a jumper wire. *: 8P connector

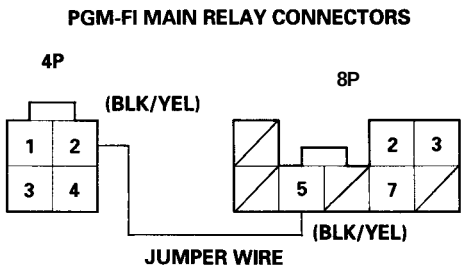

Wire side of female terminals

4. Check that battery voltage is available at the fuel pump connector when the ignition switch is turned ON (positive probe to the No. 3 terminal, negative probe to No. 6 terminal wire).

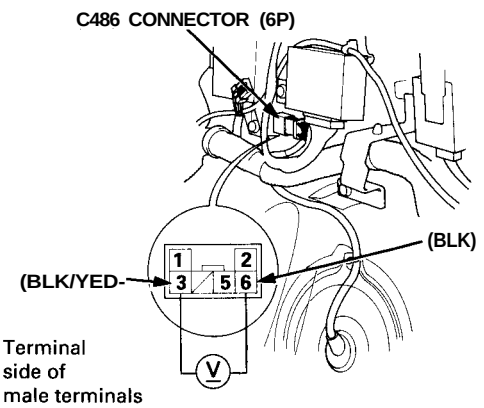

- If battery voltage is available, replace the fuel pump.
- If there is no voltage, check the fuel pump ground and wire harness (see page 11-144).

Replacement

⚠ WARNING Do not smoke while working on fuel system. Keep open flames away from your work area.

1. Remove the fuel tank (see page 11-147).
2. Disconnect the connector from the fuel pump.
3. Remove the fuel pump mounting nuts.
4. Remove the fuel pump from the fuel tank.

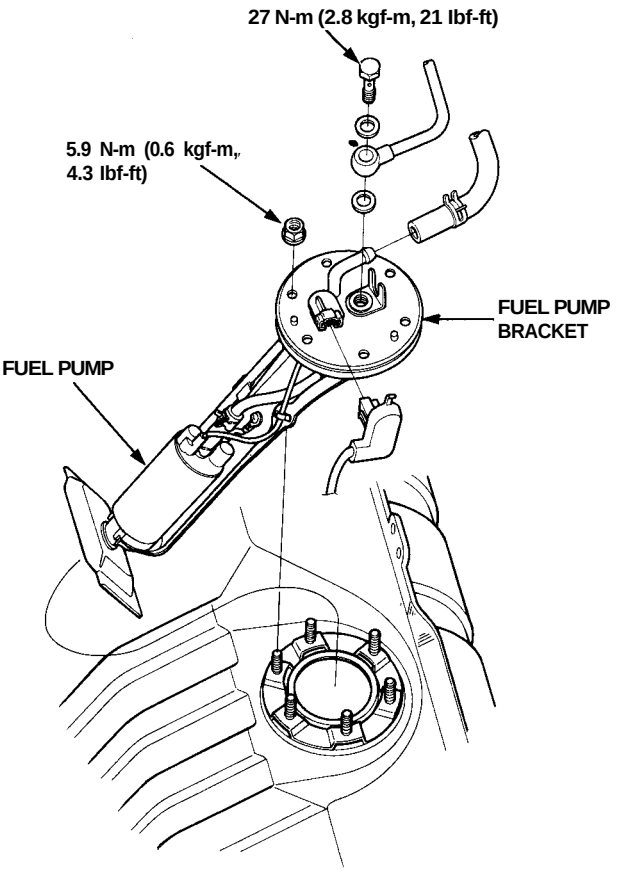

PGM-FI Main Relay

Description

The PGM-FI main relay actually contains two individual relays.

The relay is located behind the passenger's seat back panel.

One relay is energized whenever the ignition is on which supplies the battery voltage to the ECM, power to the fuel injectors, and power for the second relay.

The second relay is energized for 2 seconds when the ignition is switched on, and when the engine is running which supplies power to the fuel pump.

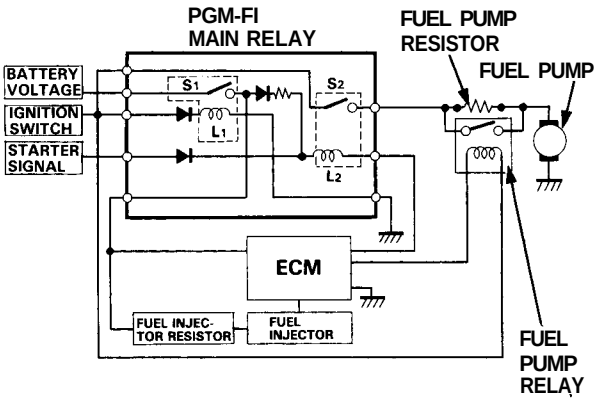

Relay Testing

NOTE: If the car starts and continues to run, the PGM-FI main relay is OK.

1. Remove the PGM-FI main relay.
2. Attach the battery positive terminal to the No. 3* terminal and the battery negative terminal to the No. 2* terminal of the PGM-FI main relay. Then check for continuity between the No. 5* terminal and No. 2 terminal of the PGM-FI main relay.
   - If there is continuity, go on to step 3.
   - If there is no continuity, replace the relay and retest.

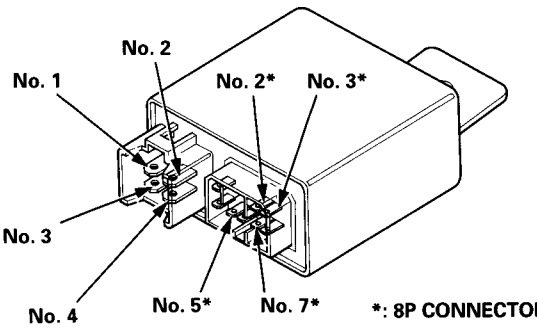

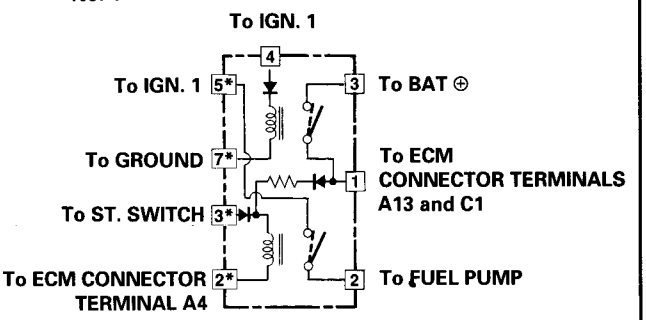

3. Attach the battery positive terminal to the No. 4 terminal and the battery negative terminal to the No. 7* terminal of the PGM-FI main relay. Then check that there is continuity between the No. 3 terminal and No. 1 terminal of the PGM-FI main relay.
   - If there is continuity, go on to step 4.
   - If there is no continuity, replace the relay and retest.
4. Attach the battery positive terminal to the No. 1 terminal and battery negative terminal to the No. 2* terminal of the PGM-FI main relay. Then check that there is continuity between the No. 5* terminal and No. 2 terminal of the PGM-FI main relay.
   - If there is continuity, the relay is OK;
     If the fuel pump still does not work, go to Harness Testing in the next column.
   - If there is no continuity, replace the relay and retest.

(cont'd)

PGM-FI Main Relay (cont'd)

Troubleshooting

— Engine will not start.
— Inspection of PGM-FI main relay and relay harness.

Check for an open in the wire (PG1 line):
1. Turn the ignition switch OFF.
2. Disconnect the PGM-FI main relay 4P connector and 8P connector.
3. Check for continuity between the PGM-FI main relay 8P connector terminal No. 7 and body ground.

Is there continuity?

NO → **Repair open in the wire between the PGM-FI main relay and G101 (located at right middle of engine).**

YES

PGM-FI MAIN RELAY 8P CONNECTOR

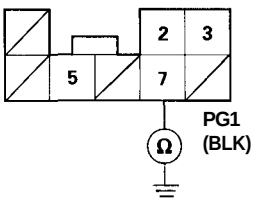

Wire side of female terminals

Check for an open or short in the wire (BAT line):
Measure voltage between the PGM-FI main relay 4P connector terminal No. 3 and body ground.

Is there battery voltage?

NO →
— Replace the ACG(S) (20 A) fuse in the engine compartment fuse/relay box.
— Repair open or short in the wire between the PGM-FI main relay and the ACG(S) (20 A) fuse.

YES

PGM-FI MAIN RELAY 4P CONNECTOR

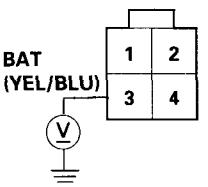

Wire side of female terminals

Check for an open or short in the wire (IGSW line):
1. Turn the ignition switch ON (II).
2. Measure voltage between the PGM-FI main relay 8P connector terminal No. 5 and body ground.

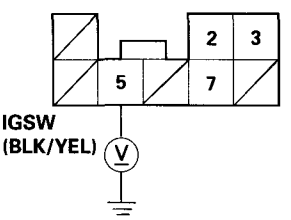

Is there battery voltage?

NO →
— Replace the No. 2 FUEL PUMP, SRS 2 (15 A) fuse in the under-dash fuse box.
— Repair open or short in the wire between the PGM-FI main relay and the No. 2 FUEL PUMP, SRS 2 (15 A) fuse.

YES

(To page 11-145)

(From page 11-144)

Check for an open in the wire (IGSW line):
Measure voltage between the PGM-FI main relay 4P connector terminal No. 4 and body ground.

Is there battery voltage?

NO

- **Replace the IG COIL (30 A) fuse in the engine compartment fuse/relay box.**
- **Repair open or short in the wire between the PGM-FI main relay and the IG COIL (30 A) fuse.**

YES

PGM-FI MAIN RELAY 4P CONNECTOR

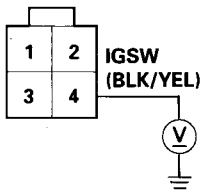

Wire side of female terminals

Check for an open or short in the wire (STS line):
1. Turn the ignition switch to the START (III) position.
   NOTE:
   • M/T: Clutch pedal must be depressed.
   • A/T: Transmission in N or P position.
2. Measure the voltage between the PGM-FI main relay 8P connector terminal No. 3 and body ground.

Is there battery voltage?

NO

- **Replace the No. 7 STARTER SIGNAL (7.5 A) fuse in the under-dash fuse box.**
- **Repair open or short in the wire between the PGM-FI main relay and the No. 7 STARTER SIGNAL (7.5 A) fuse.**

YES

PGM-FI MAIN RELAY 8P CONNECTOR

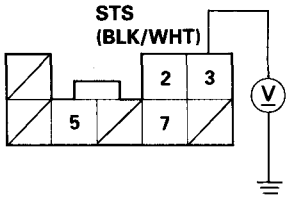

Wire side of female terminals

Check for an open in the wire (FLR1 line):
1. Turn the ignition switch OFF.
2. Disconnect the ECM connector A (26P) from the ECM.
3. Check for continuity between the PGM-FI main relay 8P connector terminal No. 2 and ECM connector terminal A4.

Is there continuity?

NO

Repair open in the wire between the ECM (A4) and the PGM-FI main relay.

YES

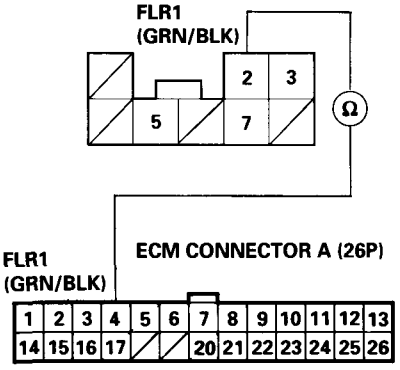

Wire side of female terminals

(To page 11-146)

(cont'd)

PGM-FI Main Relay (cont'd)

(From page 11-145)

Check for an open in the wires (IGP lines):
1. Reconnect the ECM connector A (26P).
2. Reconnect the PGM-FI main relay 4P and 8P connectors.
3. Turn the ignition switch ON (II).
4. Measure voltage between ECM connector terminals A13 and A12, and between C1 and A12.

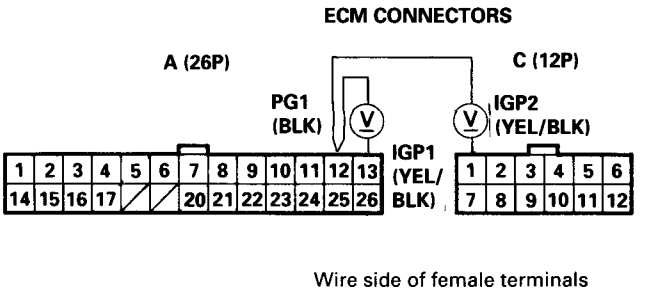

Is there battery voltage?

NO

- **Repair open in the wire between the ECM (A13, CD and the PGM-FI main relay.**
- **Replace the PGM-FI main relay.**

YES

Check for an open in the ECM:
1. Turn the ignition switch OFF.
2. Measure voltage between ECM connector terminals A4 and A12 when the ignition switch is first turned on (II) for two seconds.

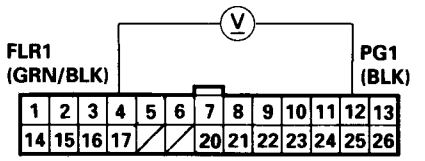

Is there 1.0 V or less?

NO

Substitute a known-good ECM and recheck (see page 11-39 for immobilizer information). If prescribed voltage is now available, replace the original ECM.

YES

Check the PGM-FI main relay (see page 11-143).

Fuel Tank

Replacement

⚠ WARNING

- **Do not smoke while working on fuel system. Keep open flame away from your work area.**
- **Make sure lifts are placed properly (see section 1).**

1. Raise the vehicle.
2. Remove the drain bolt, and drain the fuel into an approved container.
3. Remove the center rod (see section 5).
4. Disconnect the M/T shift cable and M/T clutch cable or A/T shift cable from the transmission (see section 14).
5. Remove the bulkhead panels (see section 20) and access panel.
6. Disconnect the C486 (6P) connector.
7. Disconnect the hoses. Slide back the clamps, then twist the hoses as you pull, to avoid damaging them.
8. Place a jack, or other support, under the tank.
9. Remove the strap bolts and nuts, and let the straps fall free.
10. Remove the fuel tank. If it sticks on the undercoat applied to its mount, carefully pry it off the mount.
11. Install a new washer on the drain bolt, then install parts in the reverse order of removal.

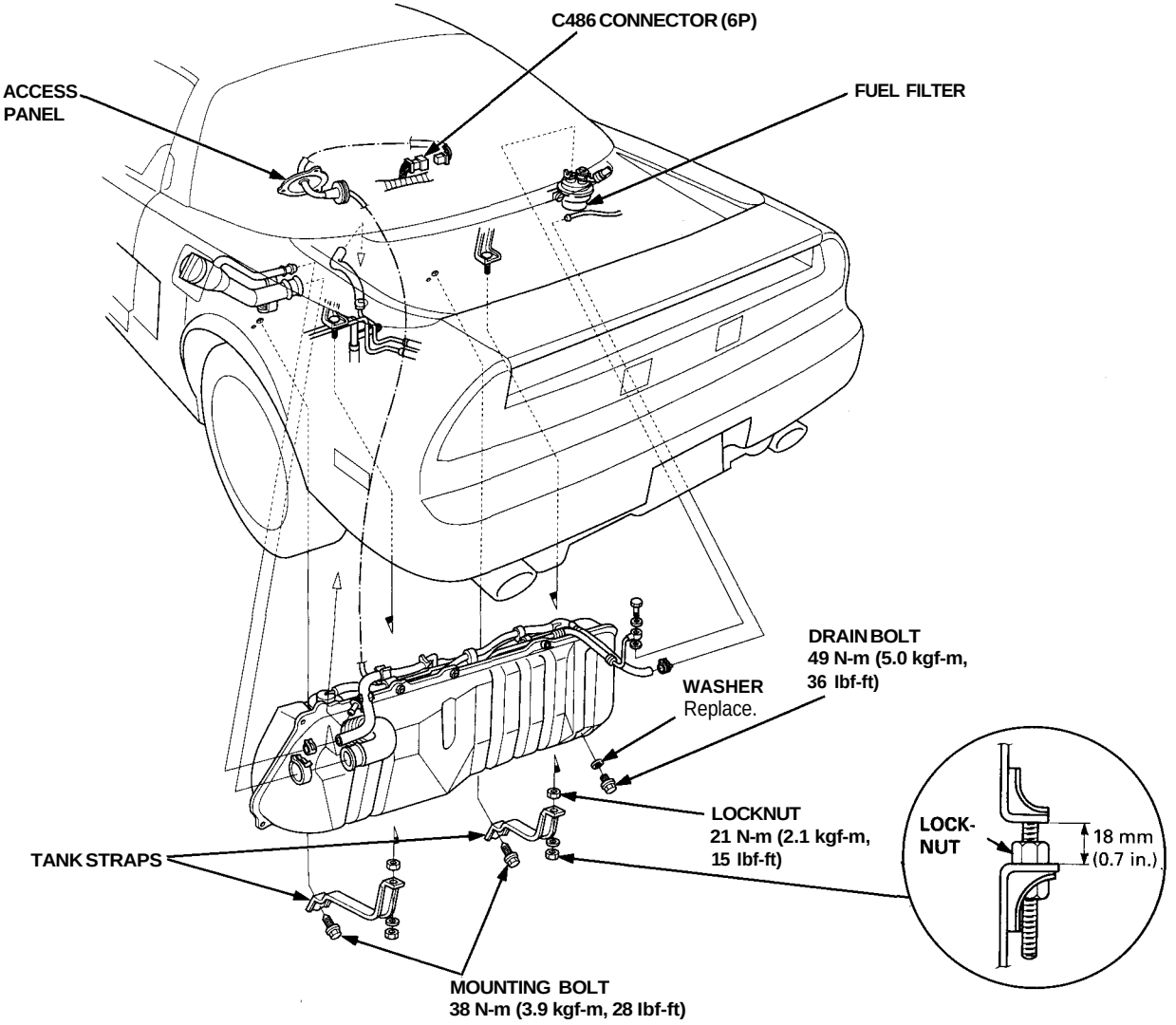

Intake Air System

System Description

The system supplies air for all engine needs. It consists of the intake air pipe. Air Cleaner (ACL), intake air duct, throttle body, and intake manifold. A resonator in the intake air duct provides additional silencing as air is drawn into the system.

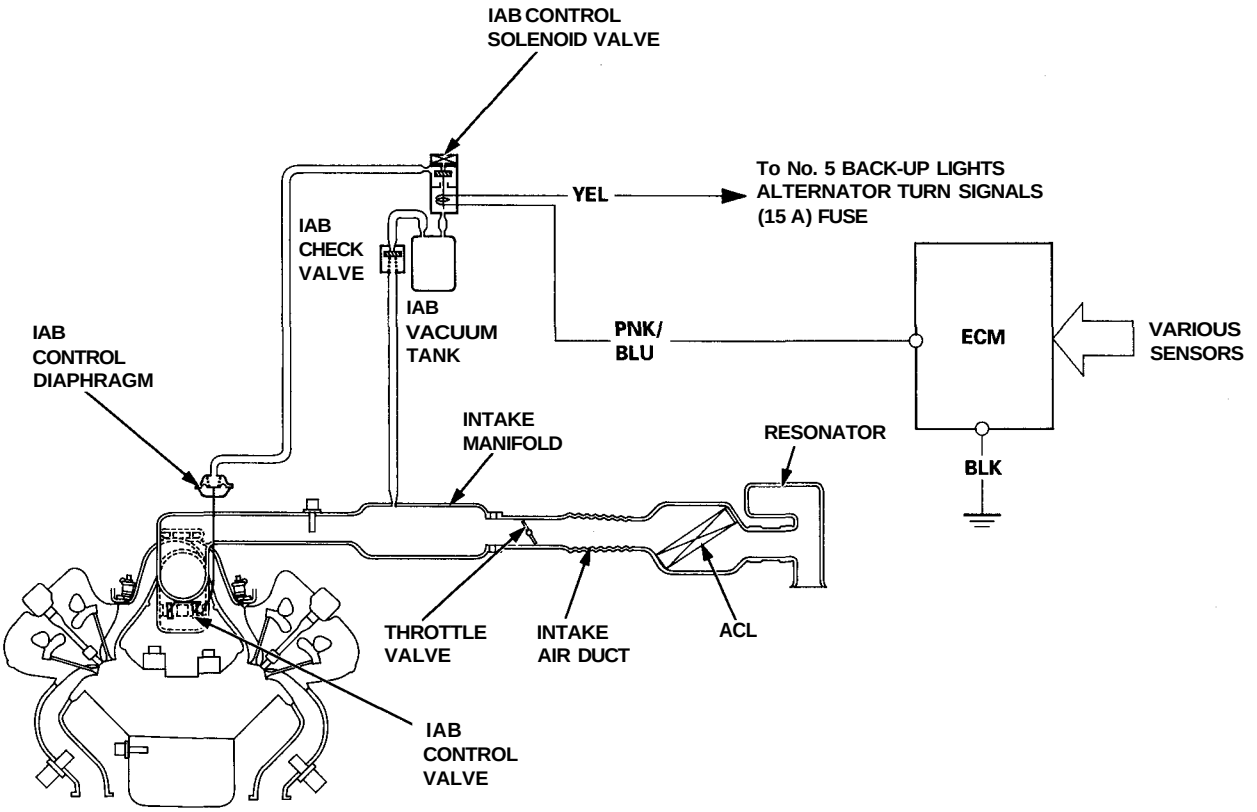

ACL Element Replacement

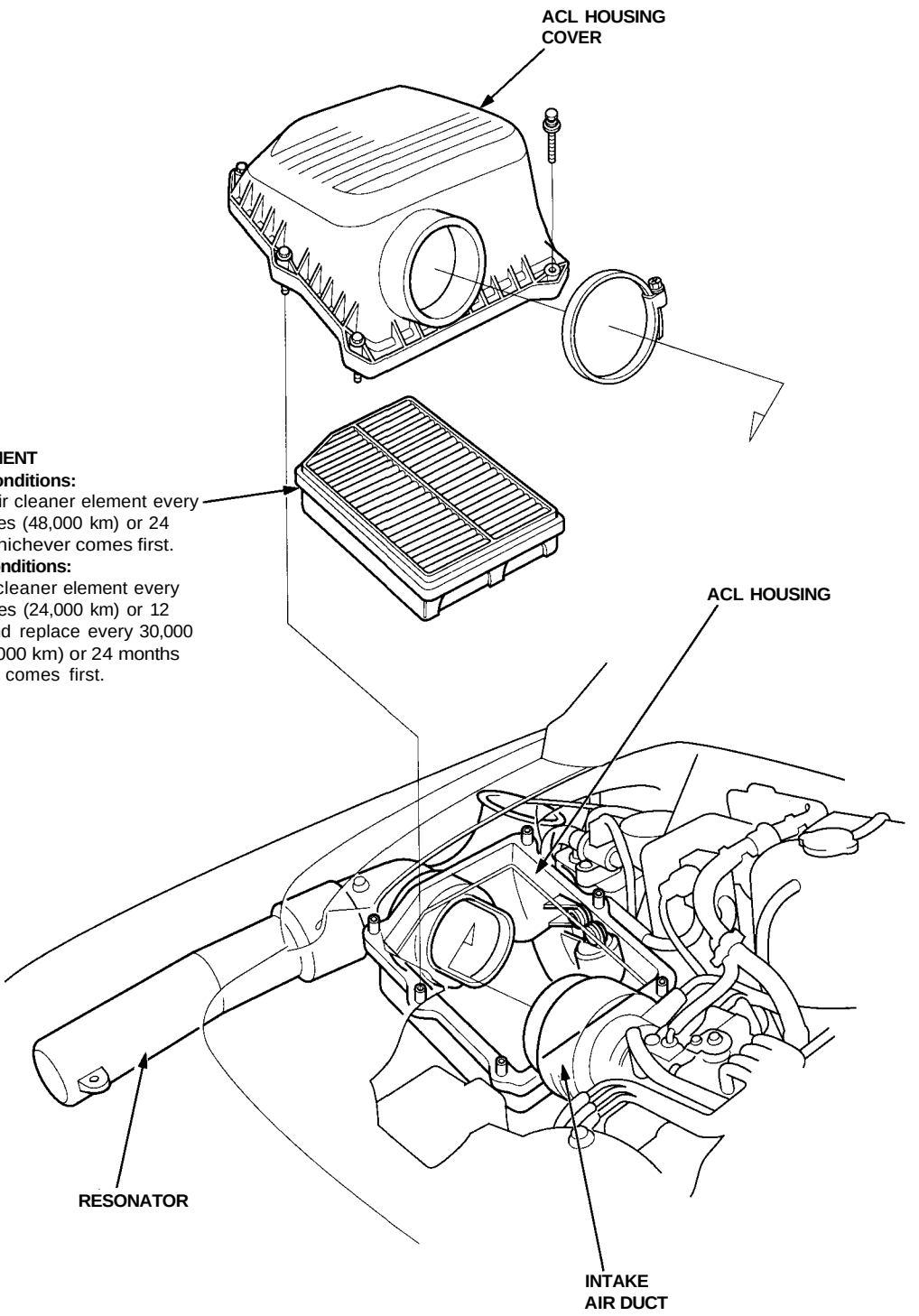

Throttle Cable

Inspection/Adjustment

1. Remove the accelerator position sensor cover.
2. Check that the throttle cable operates smoothly with no binding or sticking. Repair as necessary.
3. Check cable free play at the throttle linkage. Cable deflection should be 10 - 12 mm (0.39 - 0.47 in.).

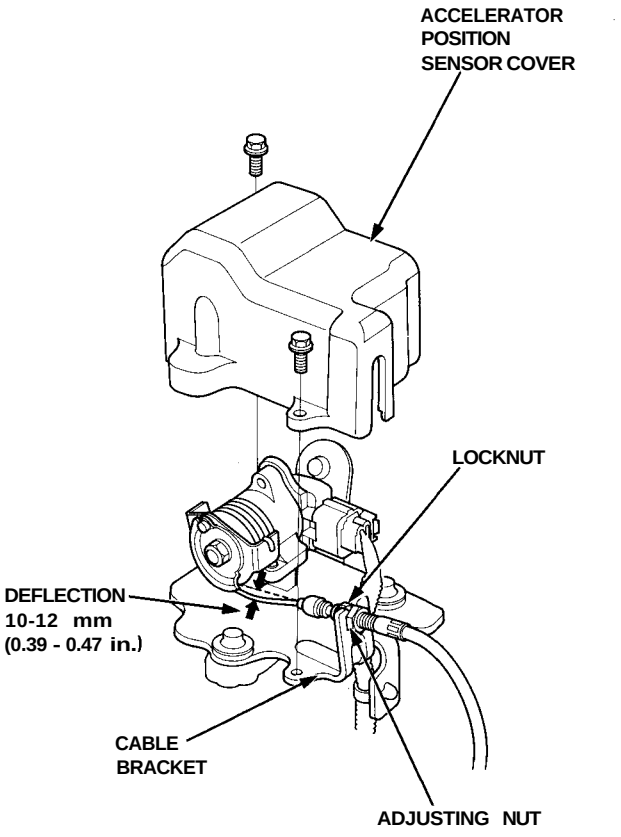

4. If deflection is not within specs, loosen the locknut, turn the adjusting nut until the deflection is as specified then retighten the locknut.

Installation

1. Rotate the throttle linkage counterclockwise, then install the throttle cable in the throttle linkage and install the cable housing in the cable bracket.

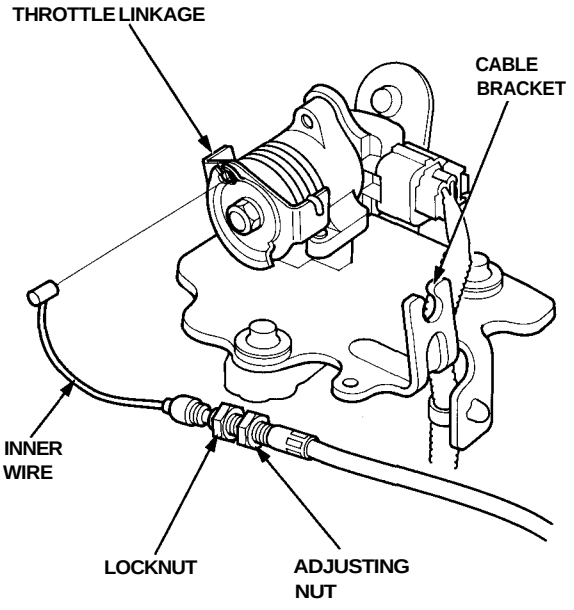

2. Hold the cable sheath, removing all slack from the cable.
3. Turn the adjusting nut until it is 3 mm (0.12 in.) away from the cable bracket.
4. Tighten the locknut. The cable deflection should now be 10 - 12 mm (0.39 - 0.47 in.). If not, see inspection/adjustment.

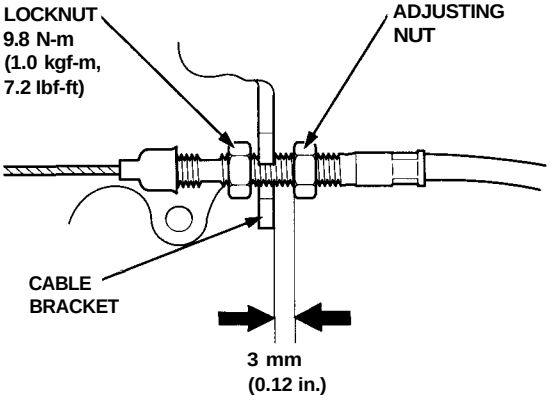

Throttle Body

Description

The throttle body is of the single-barrel side-draft type. The lower portion of the throttle valve is heated by engine coolant which is fed from the cylinder head. The idle adjusting screw, which increases/decreases bypass air, and the evaporative emission (EVAP) control canister port are located on the top of the throttle body.

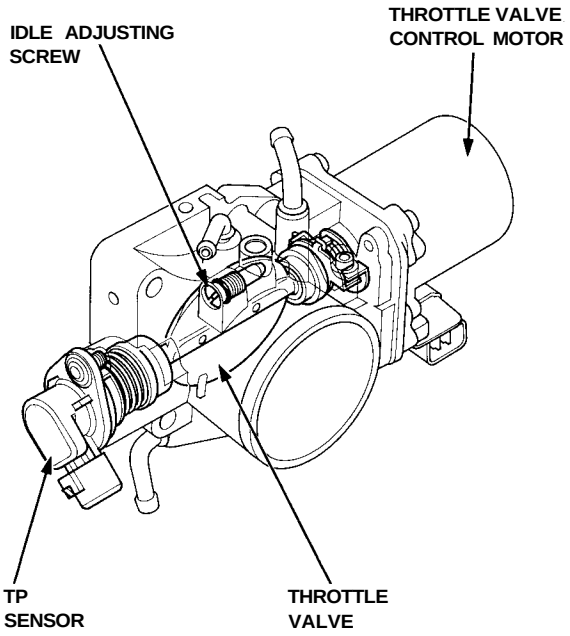

Inspection

CAUTION: Do not adjust the throttle stop screw. It is preset at the factory.

1. Start the engine. Hold the engine at 3,000 rpm with no load (A/T in N or P position, M/T in neutral) until the radiator fan comes on, then let it idle.

2. Disconnect the vacuum hose (to the EVAP control canister) from the top of the throttle body; connect a vacuum gauge to the throttle body.

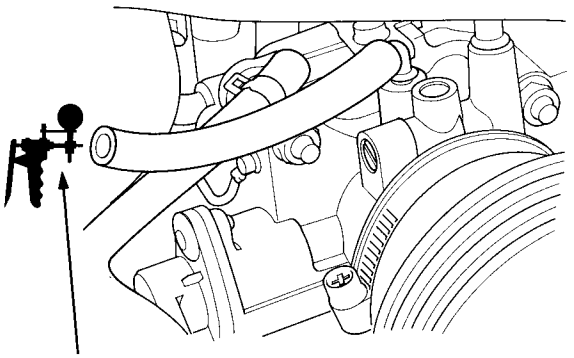

VACUUM PUMP/GAUGE, 0-30 in.Hg
A973X - 041 - XXXXX

3. Allow the engine to idle, and check that the gauge indicates no vacuum.

   If there is vacuum, check the throttle cable (see page 11-150).

4. Check that vacuum is indicated on the gauge when the throttle is opened slightly from idle.

   If the gauge indicates no vacuum, check the throttle body port. If the throttle body port is clogged, clean it with carburetor cleaner.

(cont'd)

Intake Air System

Throttle Body (cont'd)

Disassembly

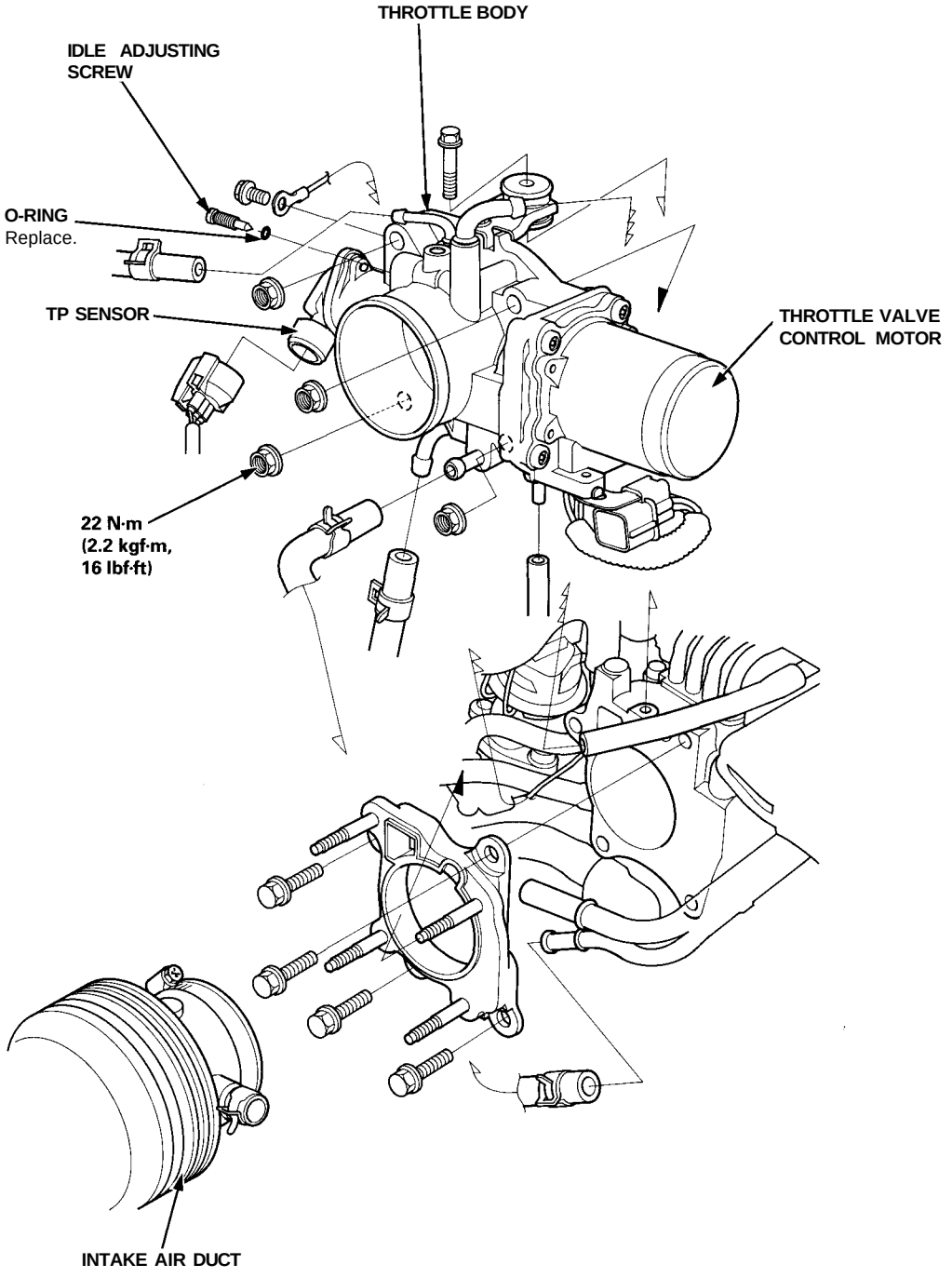

Fuel Injection Air (FIA) Control System

Description

The Fuel Injection Air (FIA) Control system enables fresh air to be drawn through the throttle body and fuel injector port.

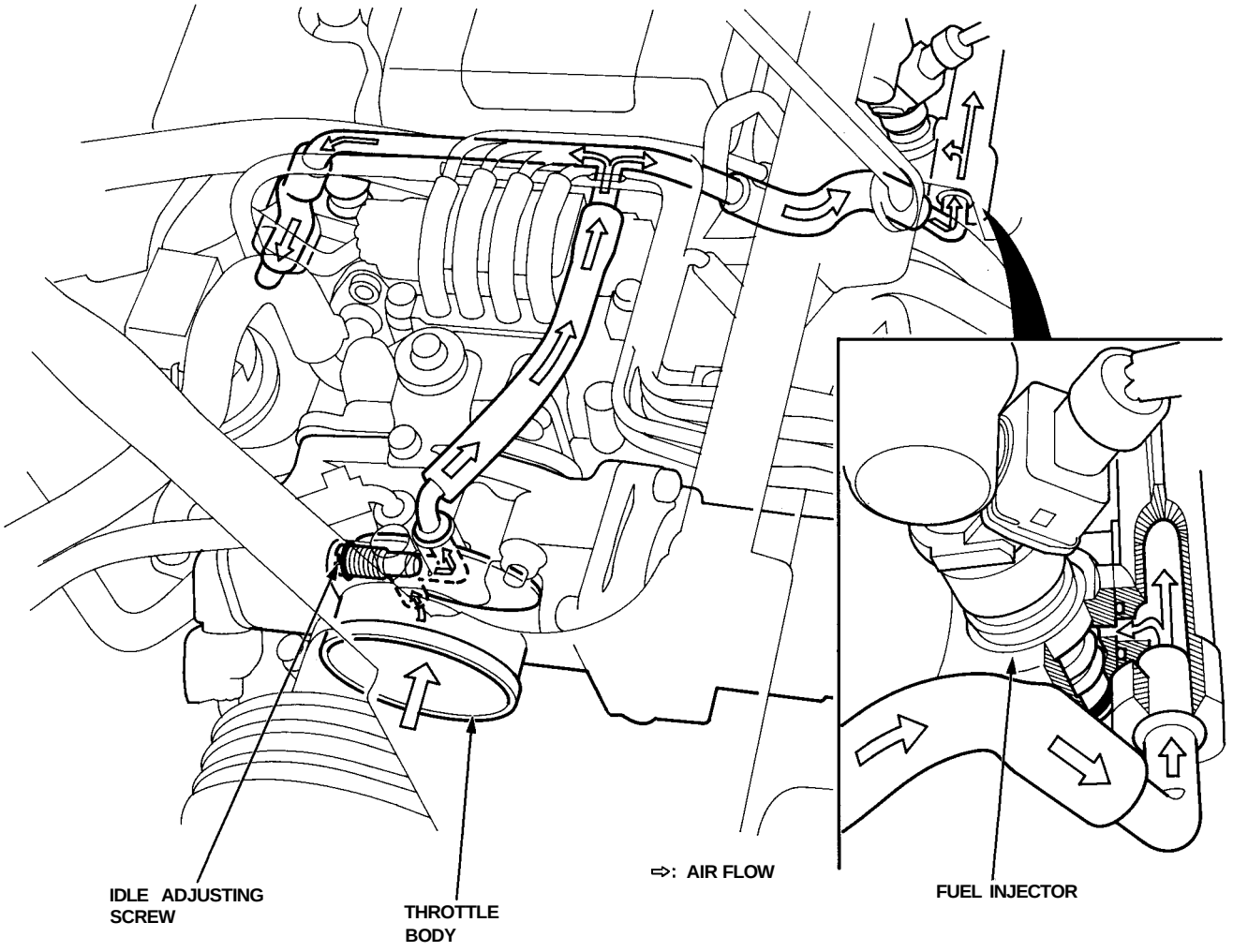

Intake Air System

Intake Air Bypass (IAB) Control System

Description

Satisfactory power performance is achieved by closing and opening the intake air bypass (IAB) control valves. High torque at low engine speed is achieved when the valves are closed, whereas high power at high engine speed is achieved when the valves are opened.

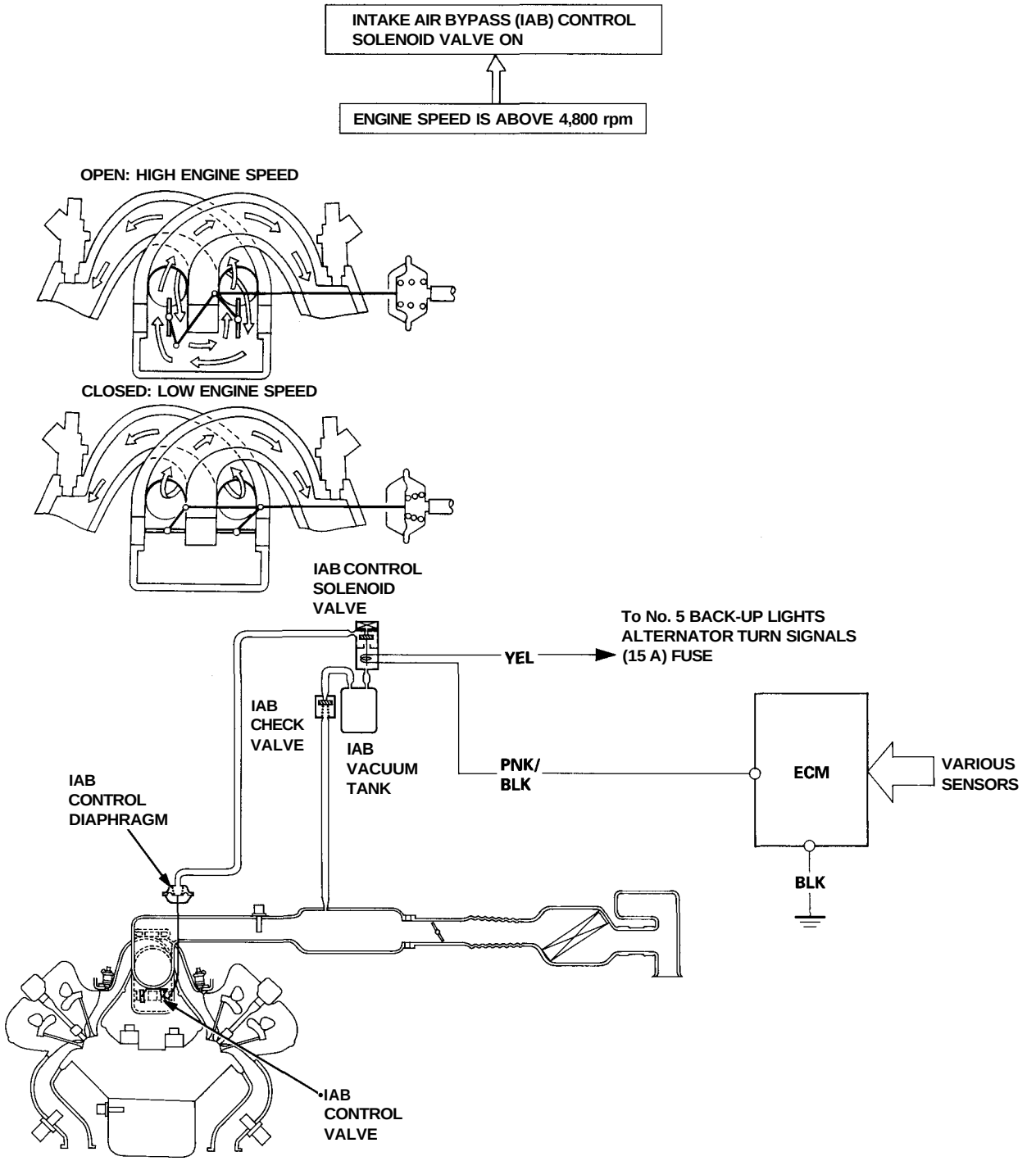

Troubleshooting

Inspection of IAB Control System.

Check for vacuum at idle:
1. Start the engine and allow it to idle.
2. Remove the No. 3 vacuum hose from the IAB control diaphragm and connect a vacuum gauge to the hose.

Is there vacuum?

NO

Check for vacuum at IAB vacuum tank:
Remove No. 3 vacuum hose from the IAB vacuum tank, then check for vacuum at the IAB vacuum tank.

Is there vacuum?

NO

Repair the blockage or vacuum leak between the IAB vacuum tank and the intake manifold.

YES

YES

Check for an open in the circuit:
1. Turn the ignition switch OFF.
2. Disconnect the 6P connector from the control box.
3. Turn the ignition switch ON (II).
4. Measure voltage between the control box connector terminals No. 3 and No. 6.

CONTROL BOX 6P CONNECTOR

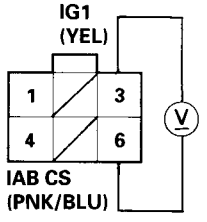

Wire side of female terminals

Is there battery voltage?

YES

Replace the IAB control solenoid valve.

NO

Check for an open in the wire (IG1 line):
Measure voltage between the control box connector terminal No. 3 and body ground.

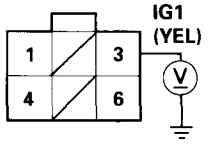

A

(To page 11-156)

B

(To page 11-156)

VACUUM PUMP/GAUGE, 0-30 in.Hg
A973 - 041 - XXXXX

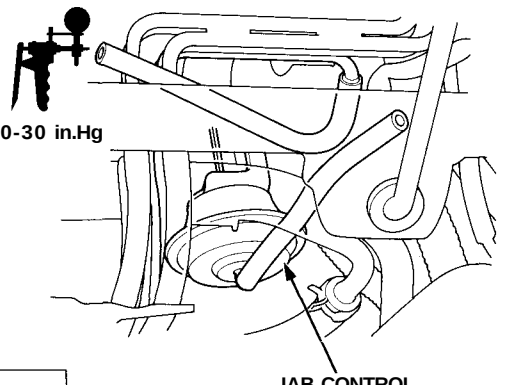

(cont'd)

Intake Air Bypass (IAB) Control System (cont'd)

(From page 11-155)

A

Check for vacuum at 5,000 rpm:
1. Raise engine speed to above 5,000 rpm.
2. Check for vacuum at the vacuum hose.

Is there vacuum?

YES

NO

IAB control system is OK.

(From page 11-155)

B

Is there battery voltage?

NO

Repair open in the wire between the control box 6P connector and No. 5 BACK-UP LIGHTS ALTERNATOR TURN SIGNALS (IS A) fuse in the under-dash fuse box.

YES

Check for an open in the wire (IABCS line):
1. Stop the engine and turn the ignition switch ON.
2. Connect ECM connector terminals A20 to A26 with a jumper wire.

ECM CONNECTOR A (26P)

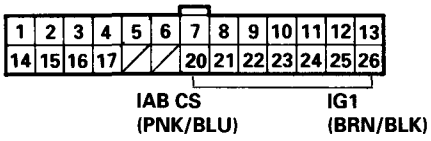

Wire side of female terminals

Does the solenoid valve click when the jumper is connected?

NO

Repair open in the wire between ECM (A20) and control box 6P connector.

YES

Substitute a known-good ECM and recheck (see page 11-39 for immobilizer information). If symptom/indication goes away, replace the original ECM.

Disconnect the 6P connector from the control box.

Is there vacuum?

YES

Replace the IAB control solenoid valve.

NO

Check for a short in the wire (IABCS line):
1. Turn the ignition switch OFF.
2. Disconnect the ECM connector A (26P) from the ECM.
3. Check for continuity between the control box connector terminal No. 6 and body ground.

CONTROL BOX 6P CONNECTOR

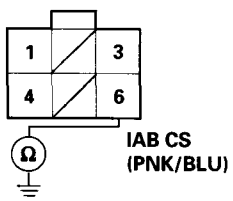

Wire side of female terminals

Is there continuity to ground?

YES

Repair short to ground at the wire between ECM (A20) and control box 6P connector.

NO

Substitute a known-good ECM and recheck (see page 11-39 for immobilizer information). If symptom goes away, replace the original ECM.

Intake Air Bypass (IAB) Control Valve Testing

CAUTION: Do not adjust the IAB control valve full-close screw. It was preset at the factory.

1. Check the IAB control valve shaft for binding or sticking.

2. Check the IAB control valve for smooth movement.

3. Check that Ⓐ of the IAB control valve is in close contact with the stop when the vacuum hose is disconnected from the IAB control diaphragm.

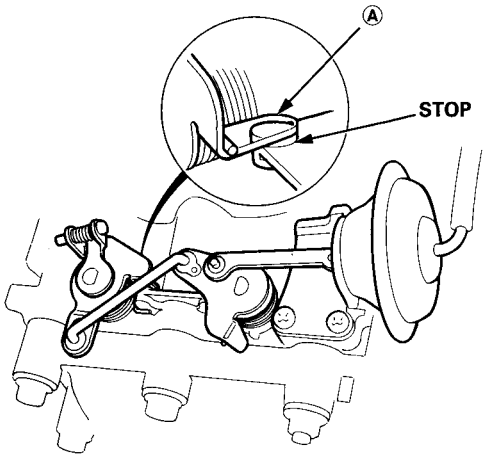

4. Check that Ⓑ of the IAB control valve is in close contact with the full-close screw when you apply 50.7 kPa (380 mmHg, 15.0 in.Hg) of vacuum to the IAB control diaphragm.

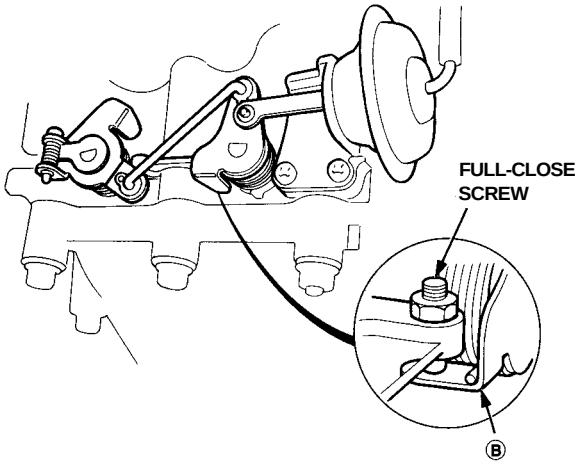

If any fault is found, clean the linkage and shafts with carburetor cleaner.

If the problem still exists after cleaning, disassemble the intake manifold and check the IAB valve body assembly (see section 9).

Emission Control System

System Description

The emission control system includes two Three Way Catalytic Converters (TWCs), Exhaust Gas Recirculation (EGR) system, Positive Crankcase Ventilation (PCV) system and Evaporative Emission (EVAP) Control system. The emission control system is designed to meet federal and state emission standards.

Tailpipe Emission

Inspection

⚠ WARNING Do not smoke during this procedure. Keep any open flame away from your work area.

1. Start the engine. Hold the engine at 3,000 rpm with no load (A/T in N or P position, M/T in neutral) until the radiator fan comes on, then let it idle.
2. Connect a tachometer.
3. Check and adjust the idle speed, if necessary (see page 11-129).
4. Warm up and calibrate the CO meter according to the meter manufacturer's instructions.
5. Check idle CO with the headlights, heater blower, rear window defogger, cooling fan, and air conditioner off.

   NOTE: (Canada) Pull the parking brake lever up. Start the engine, then check that the headlights are off.

   CO meter should indicate 0.1% maximum.

Three Way Catalytic Converter (TWC)

Description

The Three Way Catalytic Converter (TWC) is used to convert hydrocarbons (HC), carbon monoxide (CO), and oxides of nitrogen (NOx) in the exhaust gas to carbon dioxide (CO_2), dinitrogen (N_2) and water vapor.

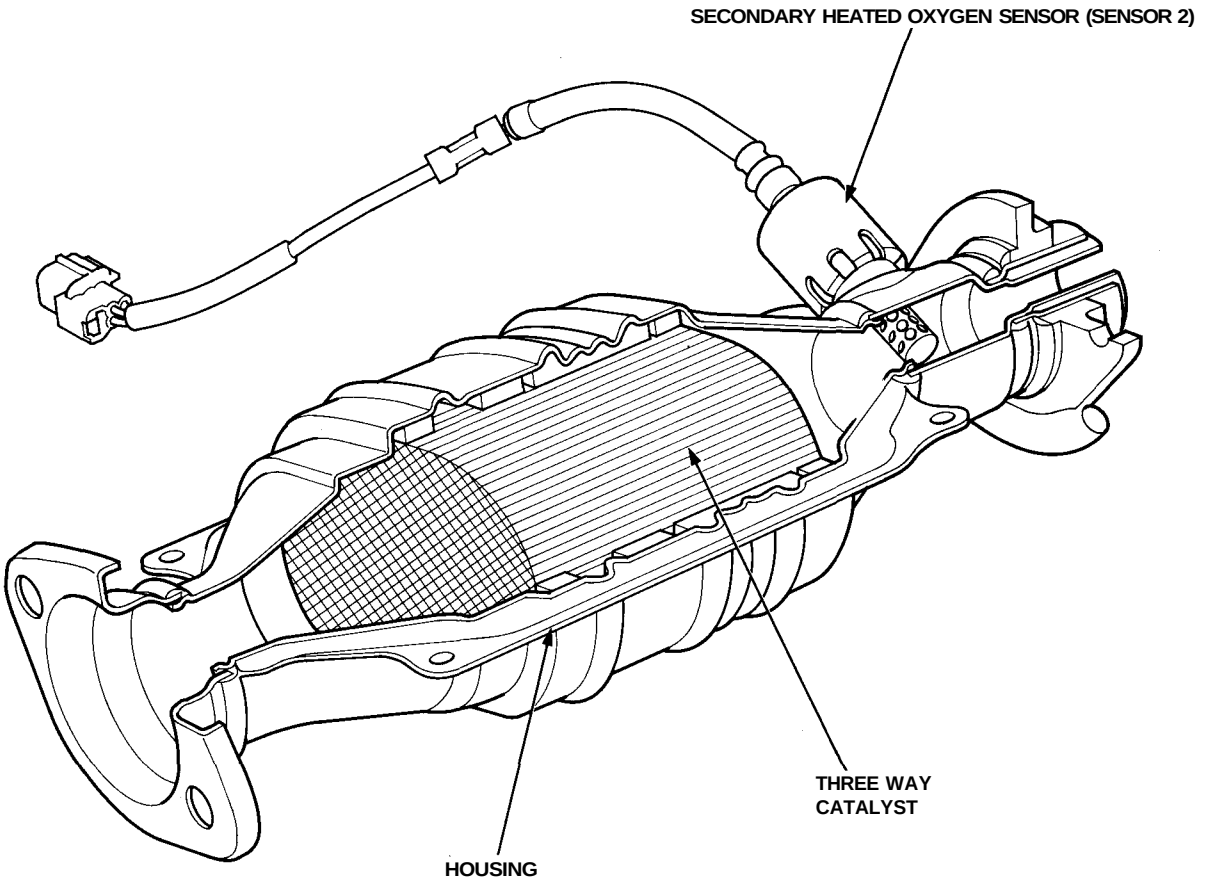

(cont'd)

Exhaust Gas Recirculation (EGR) System

The EGR system is designed to reduce oxides of nitrogen emissions (NOx) by recirculating exhaust gas through the EGR valve and the intake manifold into the combustion chambers. It is composed of the EGR valve, EGR vacuum control valve, EGR control solenoid valve, ECM and various sensors.

The ECM contains memories for ideal EGR valve lifts for varying operating conditions. The EGR valve lift sensor detects the amount of EGR valve lift and sends the information to the ECM. The ECM then compares it with the ideal EGR valve lift which is determined by signals sent from the other sensors. If there is any difference between the two, the ECM varies current to the EGR control solenoid valve to regulate vacuum applied to the EGR valve.

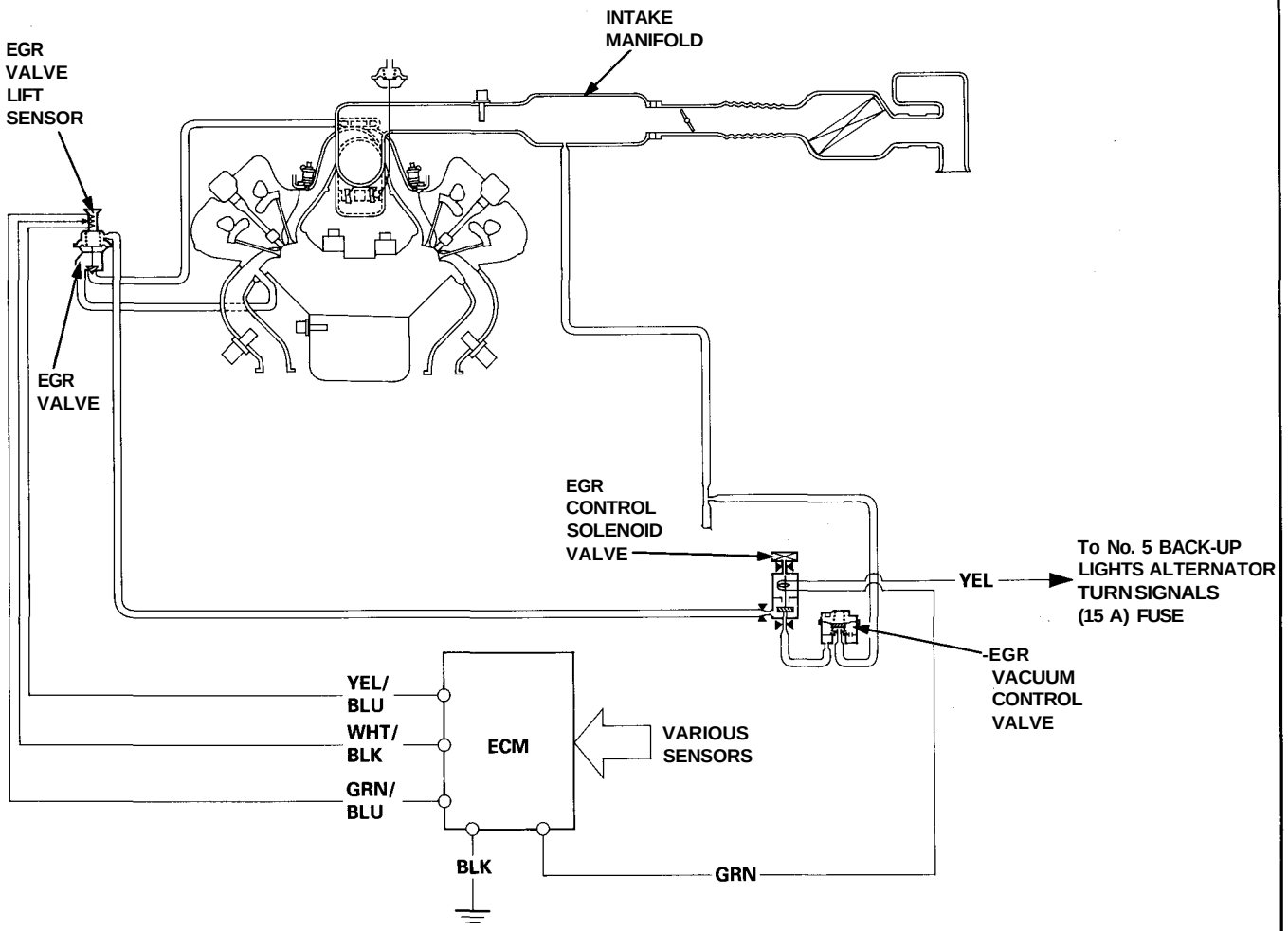

(cont'd)

Emission Control System

Positive Crankcase Ventilation (PCV) System

Description

The Positive Crankcase Ventilation (PCV) system is designed to prevent blow-by gas from escaping to the atmosphere. The PCV valve contains a spring-loaded plunger. When the engine starts, the plunger in the PCV valve is lifted in proportion to intake manifold vacuum and the blow-by gas is drawn directly into the intake manifold.

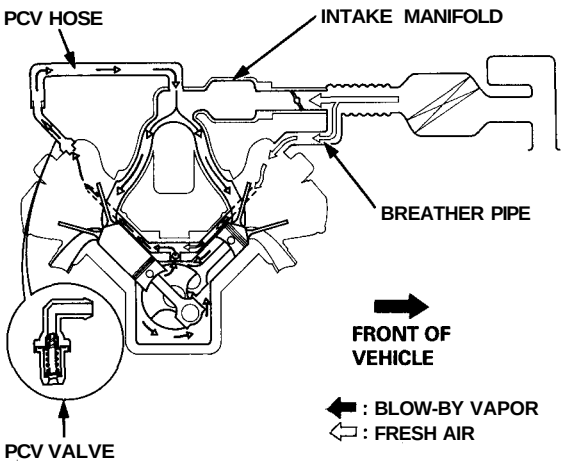

Inspection

1. Check the PCV hoses and connections for leaks and clogging.

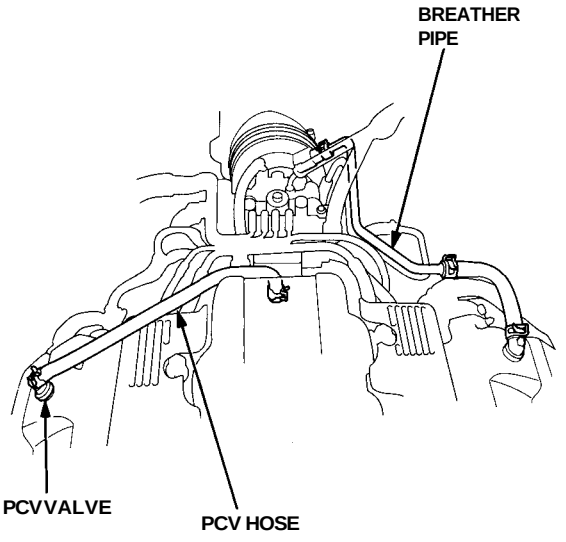

2. At idle, make sure there is a clicking sound from the PCV valve when the hose between PCV valve and intake manifold in lightly pinched with your fingers or pliers.

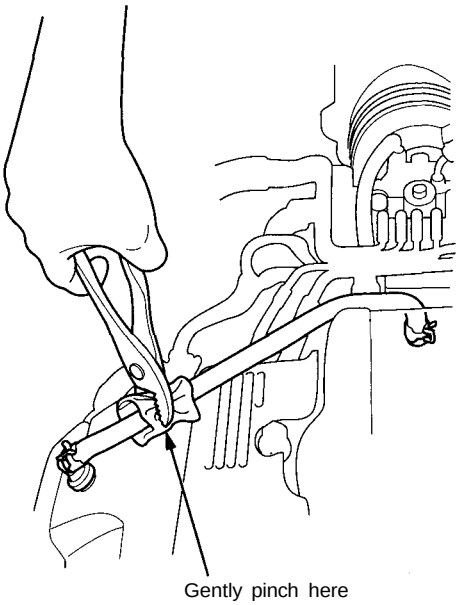

If there is no clicking sound, check the PCV valve grommet for cracks or damage. If the grommet is OK, replace the PCV valve and recheck.

Evaporative Emission (EVAP) Controls

Description

The evaporative emission controls are designed to minimize the amount of fuel vapor escaping to the atmosphere. The system consists of the following components:

A. Evaporative Emission (EVAP) Control Canister

An EVAP control canister is used for the temporary storage of fuel vapor until the fuel vapor can be purged from the EVAP control canister into the engine and burned.

B. Vapor Purge Control System

EVAP control canister purging is accomplished by drawing fresh air through the EVAP control canister and into a port on the throttle body. The purging vacuum is controlled by the EVAP purge control solenoid valve.

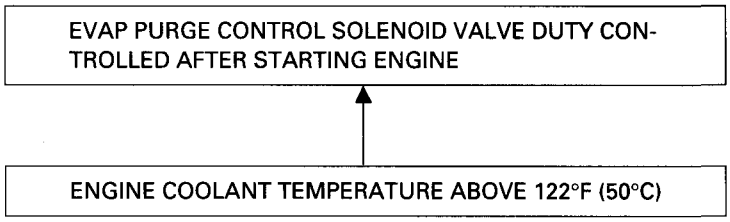

C. Fuel Tank Vapor Control System

When fuel vapor pressure in the fuel tank is higher than the set value of the EVAP two way valve, the valve opens and regulates the flow of fuel vapor to the EVAP control canister.

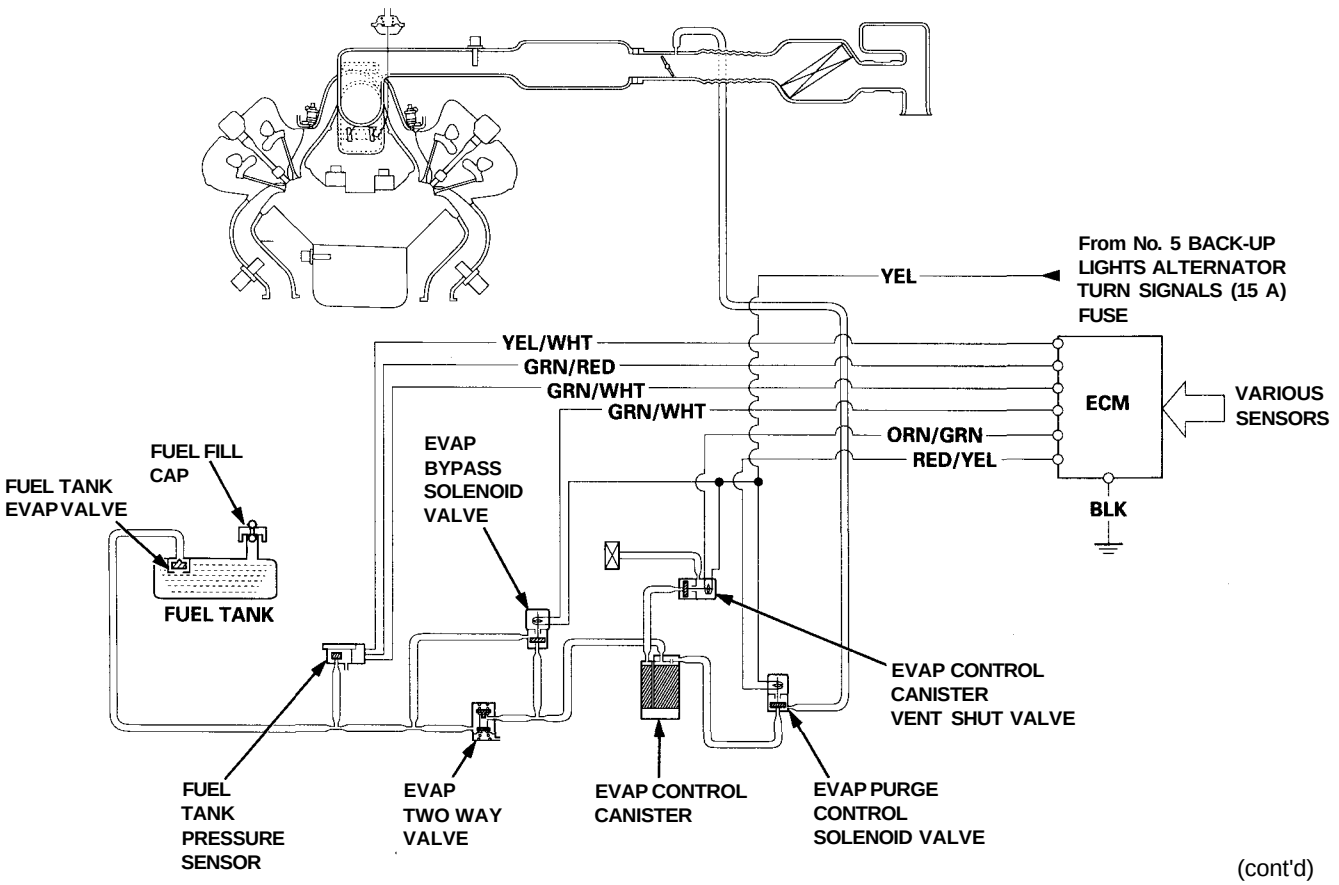

(cont'd)

EVAP Control Canister Removal/Installation

1. Remove the air cleaner housing.
2. Remove the engine compartment fuse/relay box mounting bolts and harness clip.

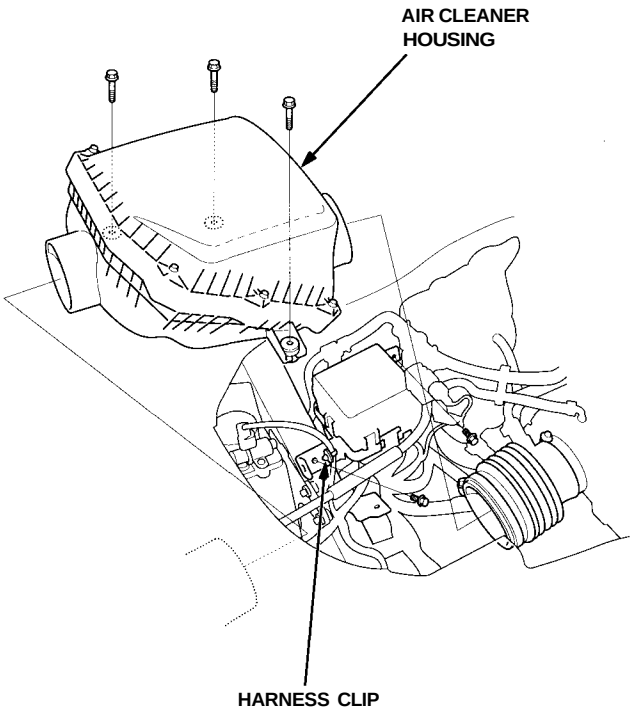

3. Remove the EVAP control canister bracket mounting bolts.
4. Disconnect the hoses and connector from the EVAP control canister.
5. Remove the dust filter from the dust filter bracket.
6. Remove the EVAP control canister and brackets.

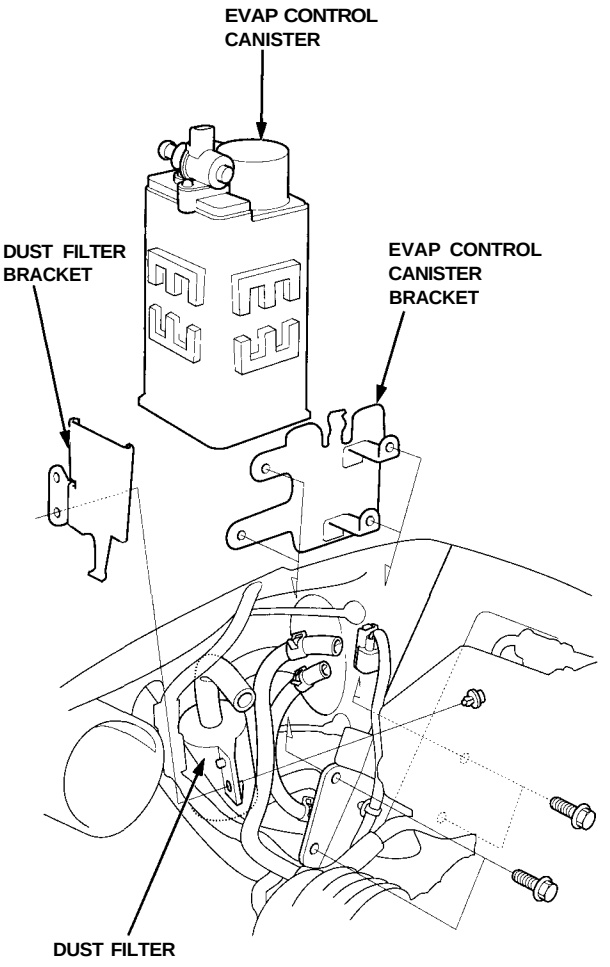

7. Install the EVAP control canister in the reverse order of removal.

Evaporative Emission (EVAP) Two Way Valve Testing

1. Remove the fuel fill cap.
2. Remove the vapor line from the EVAP two way valve (located under the engine compartment fuse/relay box), and connect it to a T-fitting from a vacuum gauge and a vacuum pump as shown.

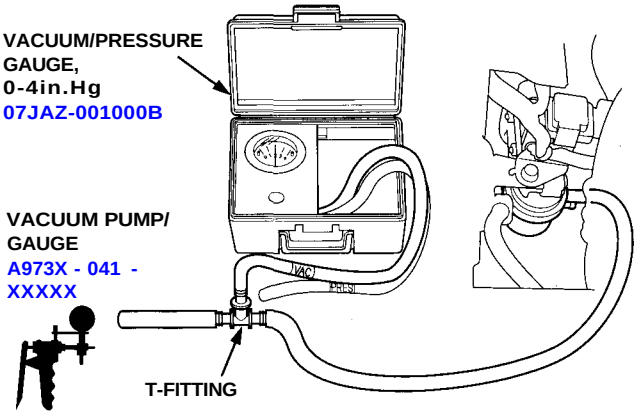

3. Apply vacuum slowly and continuously while watching the gauge. The vacuum should stabilize momentarily at 0.8 - 2.1 kPa (6-16 mmHg, 0.2 - 0.6 in.Hg).
   If the vacuum stabilizes (valve opens) below 0.8 kPa (6 mmHg, 0.2 in.Hg) or above 2.1 kPa (16 mmHg, 0.6 in.Hg), install a new valve and retest.
4. Move the vacuum pump hose from the vacuum fitting to the pressure fitting, and move the vacuum gauge hose from the vacuum side to the pressure side as shown.

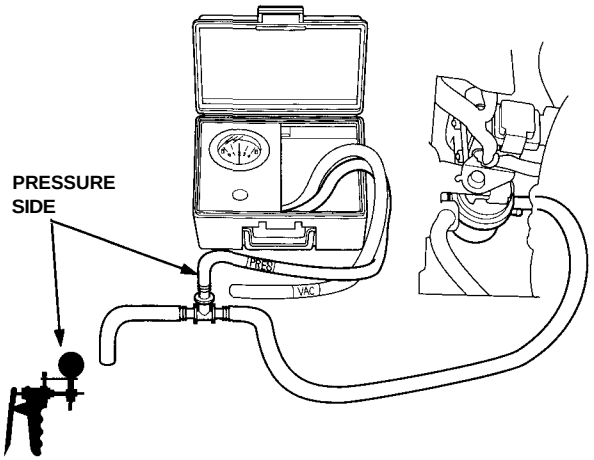

5. Slowly pressurize the vapor line while watching the gauge. The pressure should be stabilize momentarily above 1.0 kPa (8 mmHg, 0.3 in.Hg).
   - If the pressure momentarily stabilizes (valve opens) above 1.0 kPa (8 mmHg, 0.3 in.Hg), the valve is OK.
   - If the pressure stabilizes below 1.0 kPa (8 mmHg, 0.3 in.Hg), install a new valve and retest.

Transaxle

Clutch **12–1**
Manual Transmission **13–1**
Automatic Transmission **14–1**
Differential **15–1**
Driveshafts **16–1**

Clutch

Special Tools 12–2
Dual Mass Flywheel Description 12–3
Component Location Index 12–4
Clutch Pedal
- Adjustment 12–5

Clutch Master Cylinder
- Removal 12–6
- Installation 12–6

Slave Cylinder
- Removal 12–7
- Installation 12–7

Pressure Plate, Clutch Disc
- Removal 12–8
- Clutch Disc Inspection 12–9
- Pressure Plate Inspection 12–10
- Installation 12–13

Release Bearing
- Inspection 12–10

Flywheel, Flywheel Bearing
- Inspection 12–11
- Replacement 12–12

Special Tools

Ref. No.	Tool Number	Description	Qty	Page Reference
①	07LAB – PV00100 or 07924 – PD20003	Ring Gear Holder	1	12-8, 12-12,12-13
②	07MAF – PR80100	Clutch Alignment Shaft	1	12-8, 12-13
③	07746 – 0010200	Attachment, 37 x 40 mm	1	12-12
④	07749 – 0010000	Driver	1	12-12
⑤	07936 – 3710100	Handle	1	12-8, 12-13

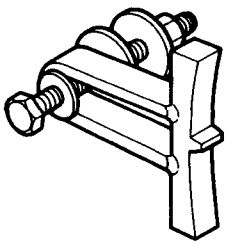

①

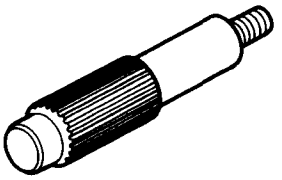

②



③

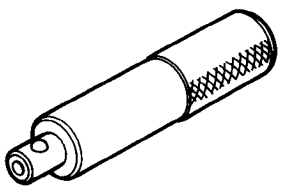

④

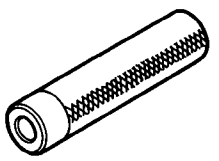

⑤

Description

Dual Mass Flywheel

The dual mass flywheel is designed to reduce the noise and vibrations produced by the engine, clutch, and transmission during acceleration and cruising.

The flywheel assembly is actually two flywheels in one, which raises the inertia mass on both the engine and transmission. The inner and outer flywheels are connected by torsion springs. This combination effectively dampers changes in engine speed before they are transmitted to the transmission.

Since there are torsion springs between the flywheels, none are used in the clutch disc, which lessens the inertia mass on the mainshaft. This reduction of the rotating inertia mass reduces the load on the synchro rings, allowing the transmission to shift smoother.

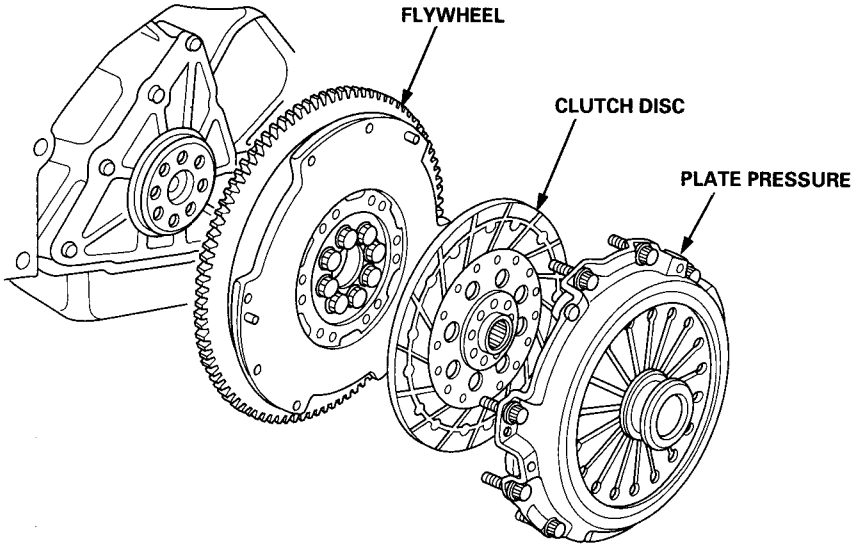

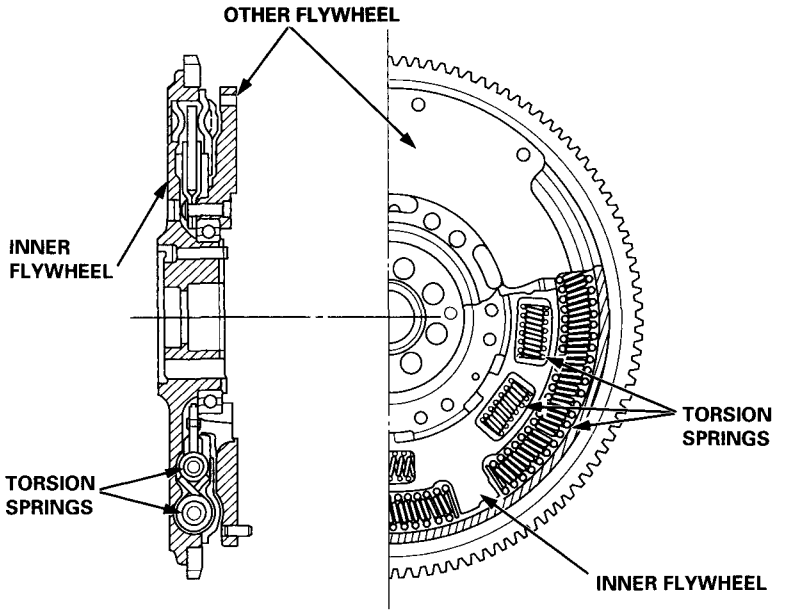

Illustrated Index

NOTE:
- Whenever the transmission is removed, clean and grease the release bearing sliding surface.
- If the parts marked * are removed, the clutch hydraulic system must be bled.
- Bleed the clutch hydraulic system (see page 12-7).
- Inspect the hoses for damage, leaks, interference, and twisting.

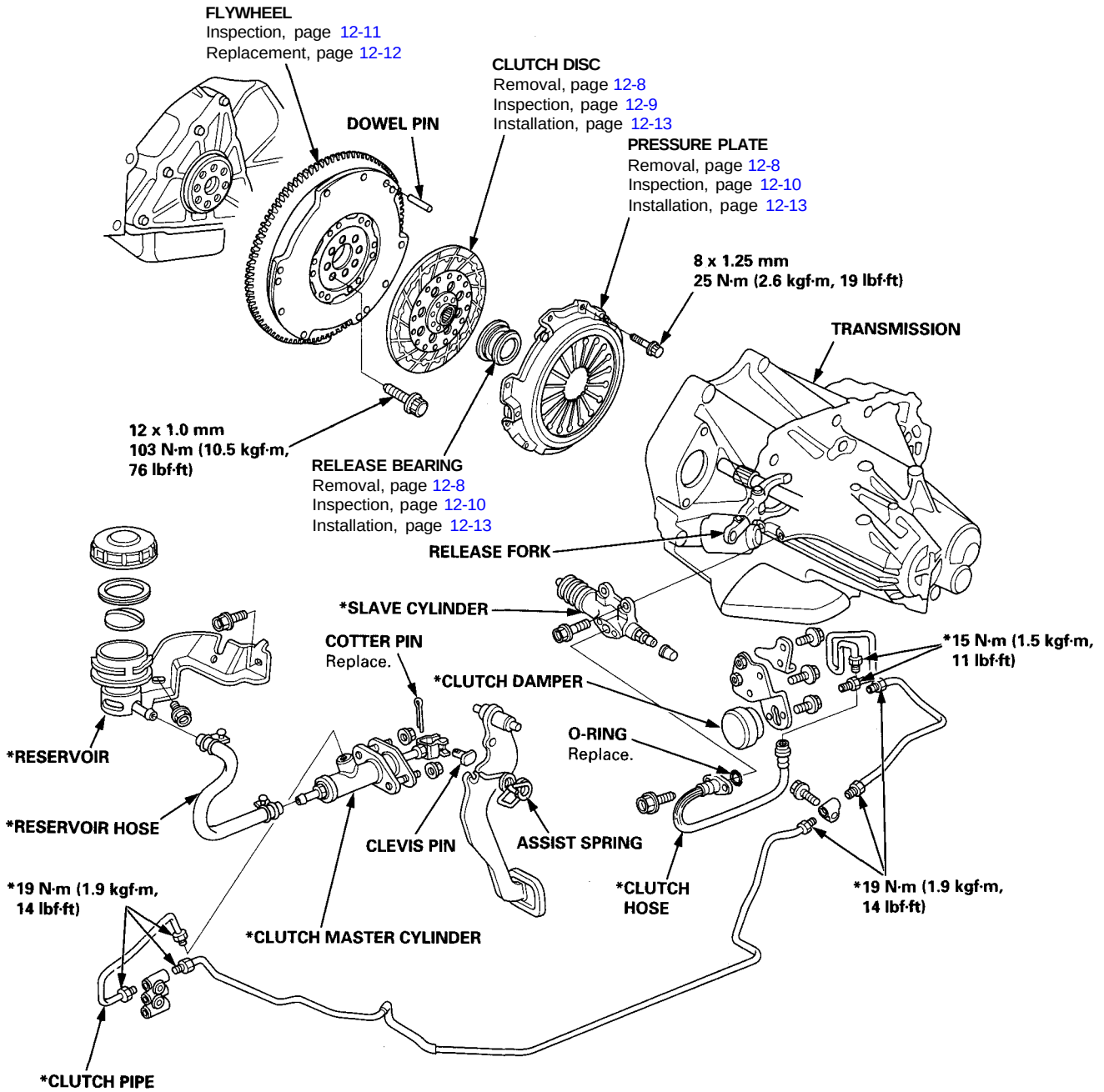

Clutch Pedal

Adjustment

NOTE:
- To check the switch, see section 23.
- The clutch is self-adjusting to compensate for wear.

CAUTION: If there is no clearance between the master cylinder piston and push rod, the release bearing is held against the diaphragm spring, which can result in clutch slippage or other clutch problems.

1. Loosen locknut A, and back off the pedal switch until it no longer touches the clutch pedal.
2. Loosen locknut C, and turn the push rod in or out to get the specified stroke and height at the clutch pedal.
3. Tighten locknut C.
4. Thread in the clutch pedal switch A in until it contacts the clutch pedal.
5. Turn the switch in 1/4—1/2 turn further.
6. Tighten locknut A.
7. Loosen locknut B and clutch pedal switch B.
8. Measure the clearance between the floor board and clutch pedal with the clutch pedal fully depressed.
9. Release the clutch pedal 15-20 mm (0.59-0.79 in) from the fully depressed position, and hold it there. Adjust the position of pedal switch B so that the engine will start with the clutch pedal in this position.
10. Thread in pedal switch B in 1/4-1/2 turn further.
11. Tighten locknut B.

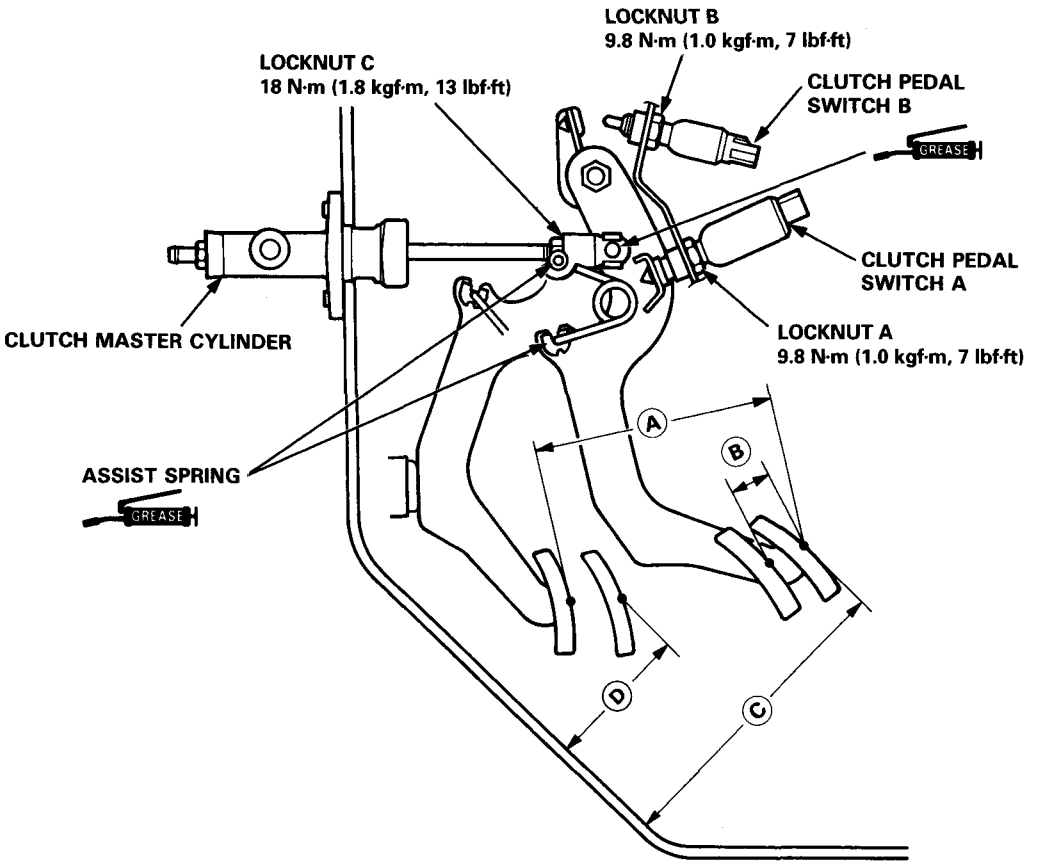

Ⓐ (STROKE at PEDAL): 125 mm (4.92 in)
Ⓑ (TOTAL CLUTCH PEDAL FREE PLAY): 9—15 mm (0.35—0.59 in) includes the pedal play 1—7 mm (0.04—0.28 in)
Ⓒ (CLUTCH PEDAL HEIGHT): 176.2 mm (6.94 in) to the floor.
Ⓓ (CLUTCH PEDAL DISENGAGEMENT HEIGHT): 92 mm (3.62 in) minimum to the floor.

Clutch Master Cylinder

Removal

CAUTION:
- **Avoid spilling brake fluid on paint as it may damage the finish.**
- **Plug the end of the clutch line and reservoir hose with a shop towel to prevent fluid from flowing out of the clutch line and reservoir hose after disconnecting.**

1. Disconnect the clutch line from the clutch master cylinder.

2. Pry out the cotter pin, and pull the clevis pin out of the clevis.

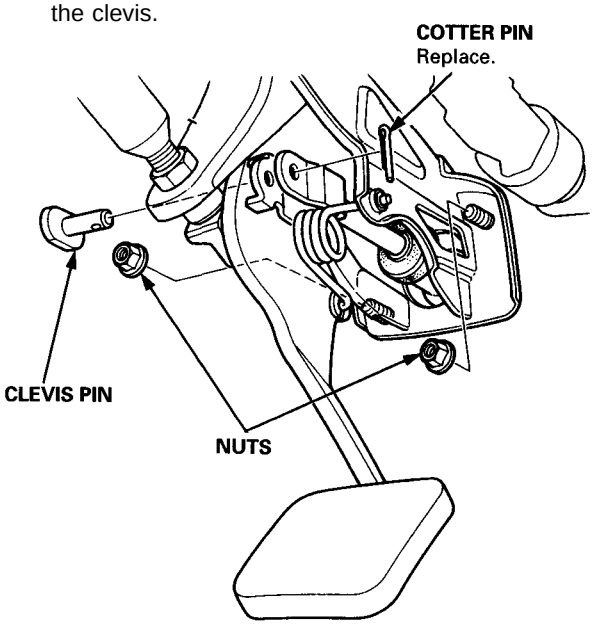

3. Remove the nuts.

4. Remove the reservoir from the front compartment, then remove the clutch master cylinder.

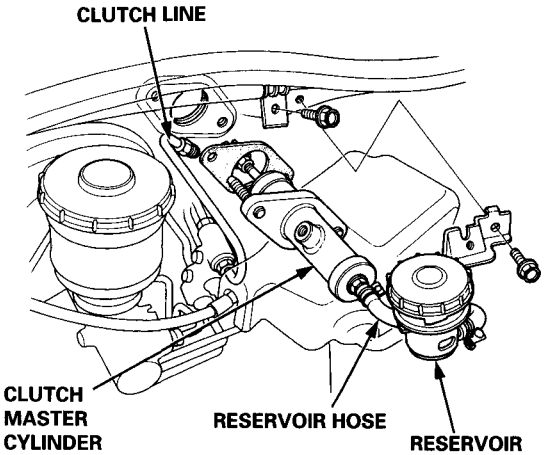

5. Disconnect the reservoir hose from the clutch master cylinder, then remove the reservoir.

Installation

1. Install the clutch master cylinder in the reverse order of removal.

   NOTE: Bleed the clutch hydraulic system (see page 12-7).

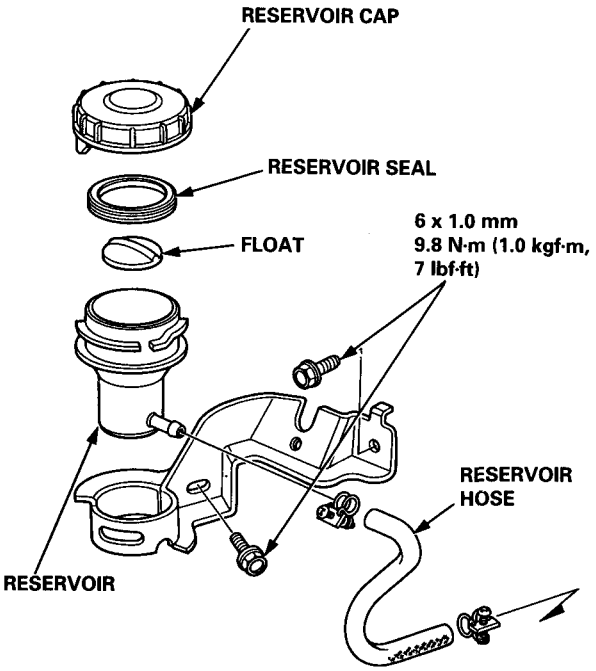

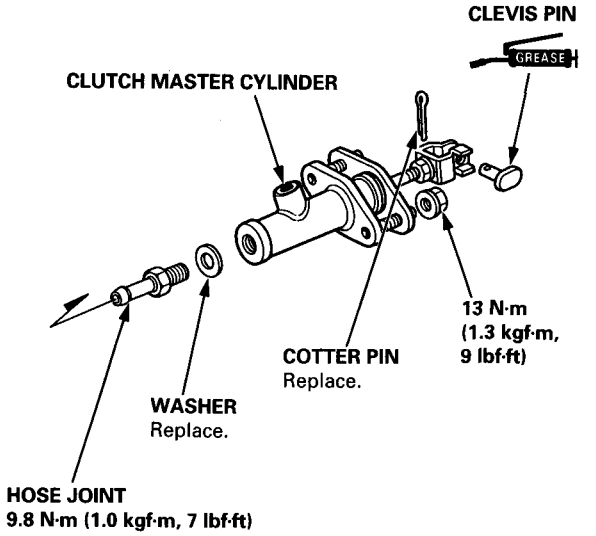

Slave Cylinder

Removal

1. Disconnect the clutch hose from the slave cylinder. Plug the end of the clutch hose with a shop towel to prevent brake fluid from coming out.

   CAUTION: Avoid spilling brake fluid on the painted surfaces, as it may damage the finish.

2. Remove the slave cylinder from the clutch housing.

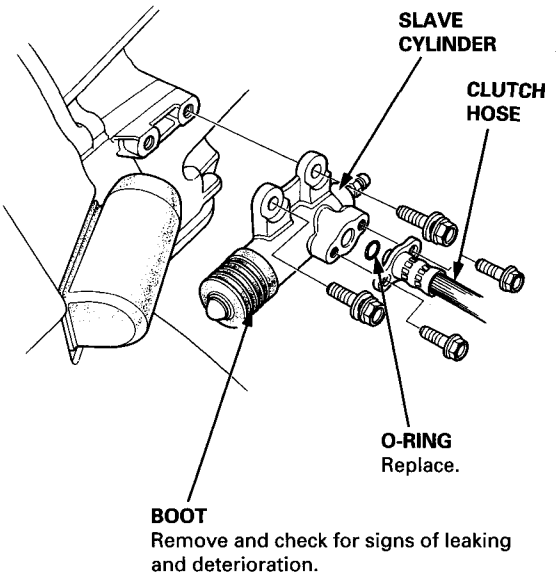

Installation

GREASE: Super High Temp Urea Grease (P/N 08798 – 9002).
GREASE: Brake Assembly Lube or equivalent rubber grease.

1. Install the slave cylinder on the clutch housing.

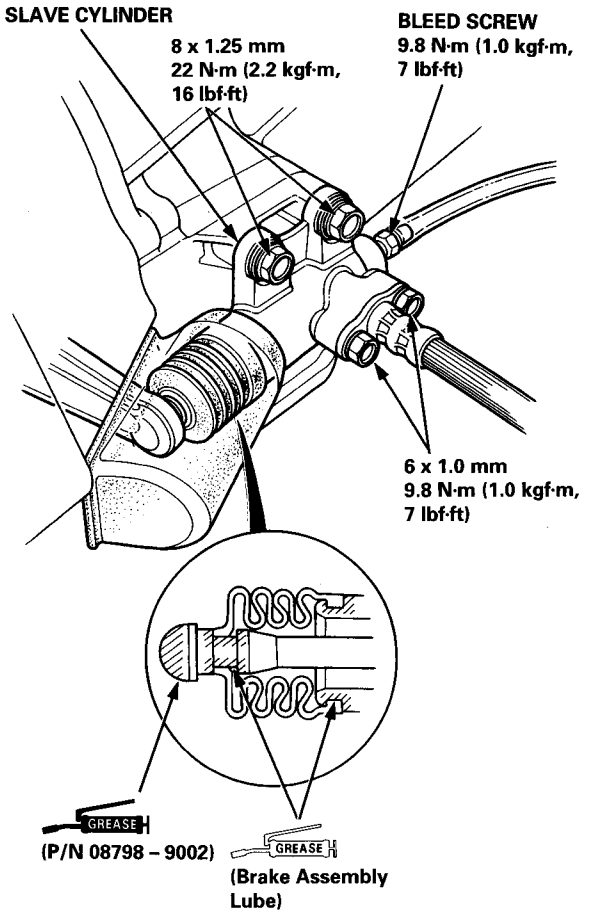

2. Bleed the clutch hydraulic system:

   - Attach a hose to the bleed screw, then suspend the hose in a container of brake fluid.
   - Make sure there is an adequate supply of fluid at the master cylinder, then slowly pump the clutch pedal until no more bubbles appear at the hose.
   - Refill the master cylinder fluid when done.
   - Always use Genuine Honda DOT 3 Brake Fluid. Using a non-Honda brake fluid can cause corrosion and decrease the life of the system.

Pressure Plate, Clutch Disc

Removal

1. Remove the transmission (see section 13).
2. Install the special tools.

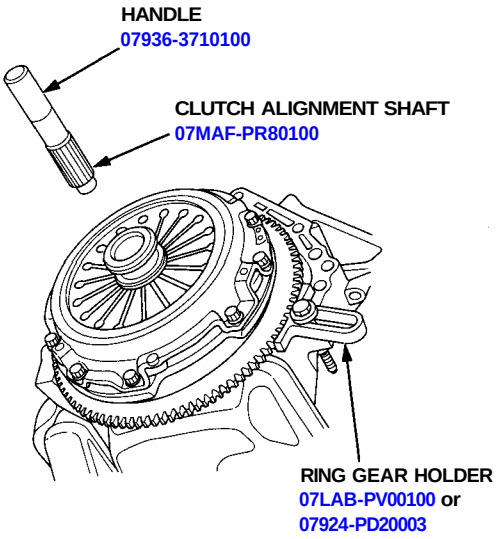

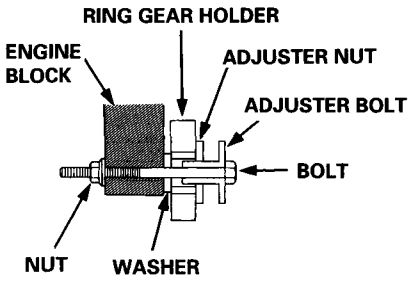

3. To prevent warping, unscrew the pressure plate mounting bolts two turns at a time in a crisscross pattern, then remove the pressure plate.

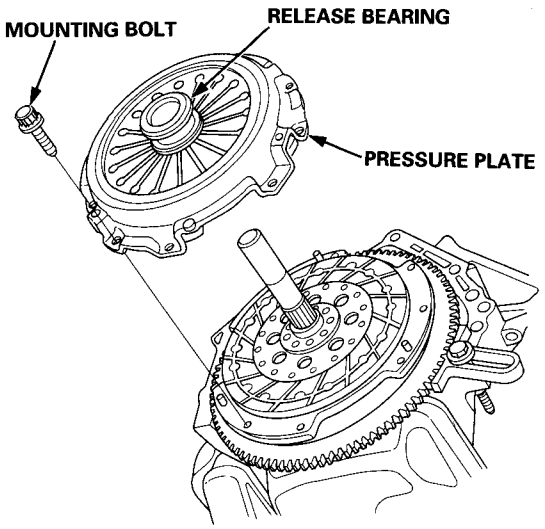

4. Remove the release bearing from the pressure plate.

5. Remove the clutch disc and special tools.

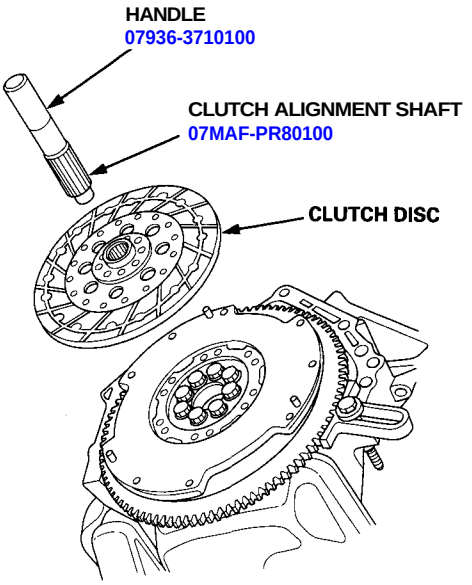

Clutch Disc

Inspection

1. Inspect the lining of the clutch disc for signs of slippage or oil. Replace it if it is burned black or oil soaked.

2. Measure the clutch disc thickness.

   Clutch Disc Thickness:
   Standard (New): 8.2 – 8.9 mm (0.32 – 0.35 in)
   Service Limit: 6.2 mm (0.24 in)

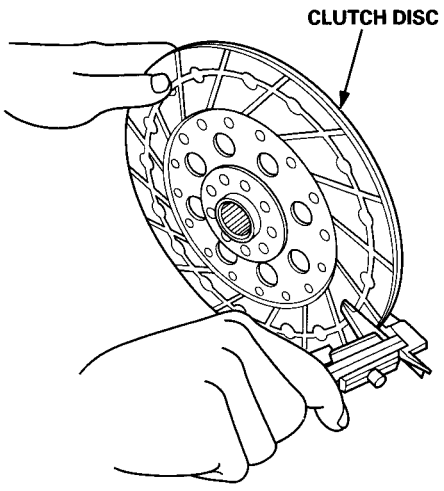

If the thickness is less than the service limit, replace the clutch disc.

3. Measure the depth from the lining surface to the rivets, on both sides.

   Rivet Depth:
   Standard (New): 1.2 mm (0.047 in) min.
   Service Limit: 0.2 mm (0.01 in)

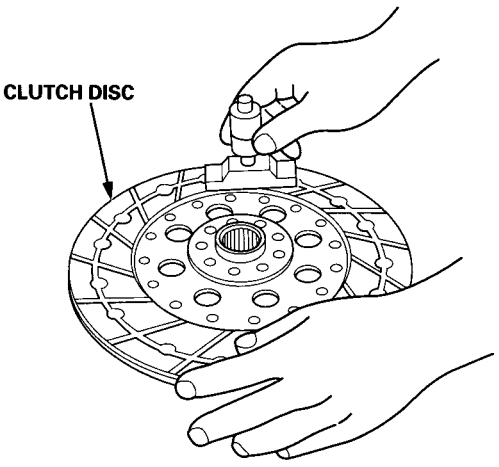

If the depth is less than the service limit, replace the clutch disc.

Pressure Plate

Inspection

1. Inspect the pressure plate surface for wear, cracks, and burning.
2. Inspect the fingers of the diaphragm spring for wear at the release bearing contact area.
3. Inspect for warpage using a straight edge and feeler gauge. Measure across the pressure plate at three points.

Standard (New): 0.03 mm (0.001 in) max.
Service Limit: 0.15 mm (0.006 in)

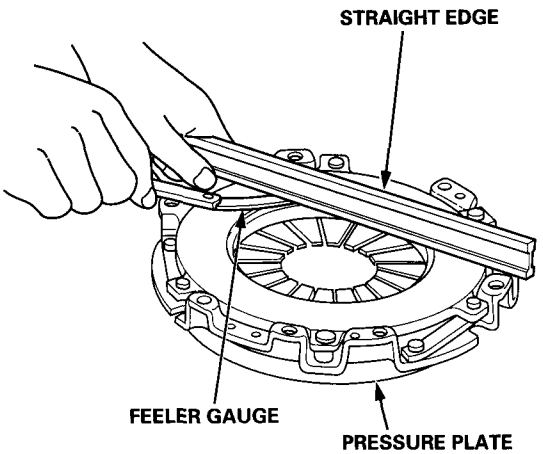

If the warpage exceeds the service limit, replace the pressure plate.

Release Bearing

Inspection

1. Check the release bearing for excessive play by spinning it by hand. Do not wash it in solvent.



2. If there is excessive play, replace the release bearing with a new one.

Inspection

1. Inspect the ring gear teeth for wear and damage.
2. Inspect the clutch disc mating surface on the flywheel for wear, cracks, and burning.
3. Measure the flywheel runout using a dial indicator through at least two full turns. Push against the flywheel each time you turn it to take up the crankshaft thrust washer clearance.

   NOTE: The runout can be measured with engine installed.

   Standard (New): 0.05 mm (0.002 in) max.
   Service Limit: 0.15 mm (0.006 in)

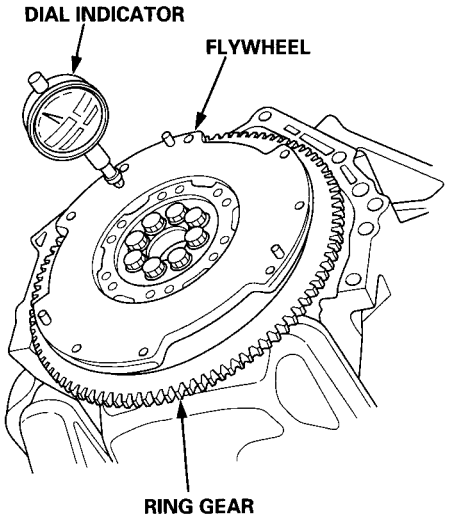

   If the runout the exceeds the service limit, replace the flywheel.

4. Turn the inner race of the flywheel bearing with your finger. The flywheel bearing should turn smoothly and quietly. Check that the bearing outer race fits tight in the flywheel. Replace the bearing if the inner race does not turn smoothly, quietly, or if the outer race does not fit tight in the flywheel.

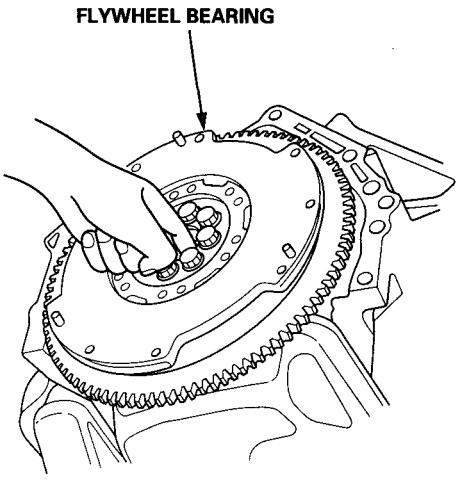

Flywheel, Flywheel Bearing

Replacement

1. Remove the flywheel mounting bolts in a crisscross pattern in several steps, then remove the flywheel.

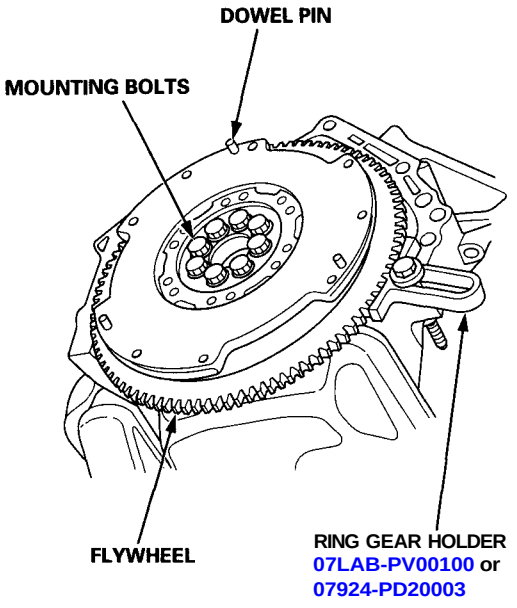

2. Remove the flywheel bearing from the flywheel.

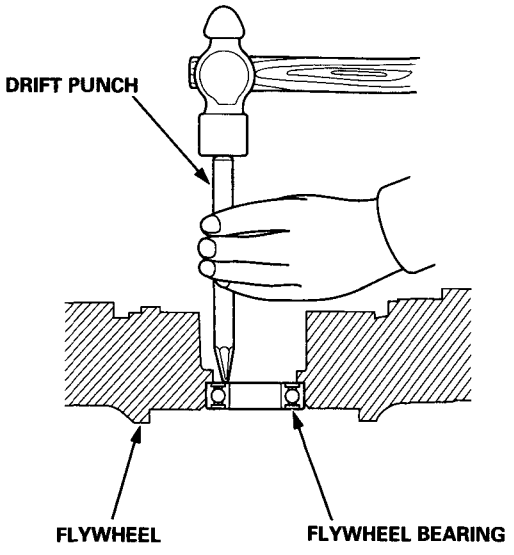

3. Drive the new flywheel bearing into the flywheel using the special tools.

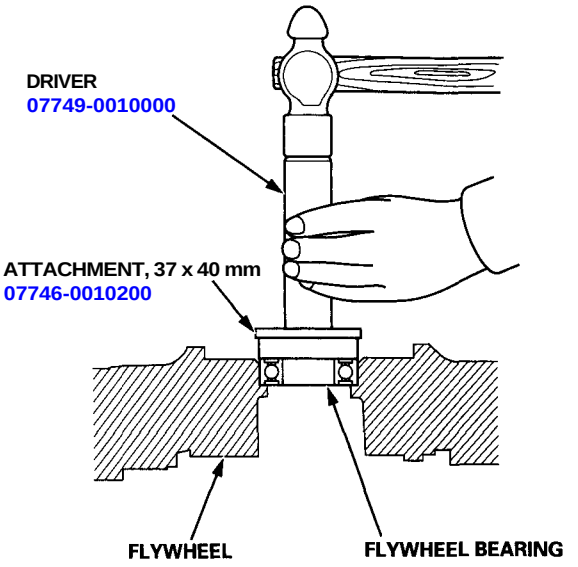

4. Align the hole in the flywheel with the crankshaft dowel pin and install the flywheel.
Install the bolts finger tight.

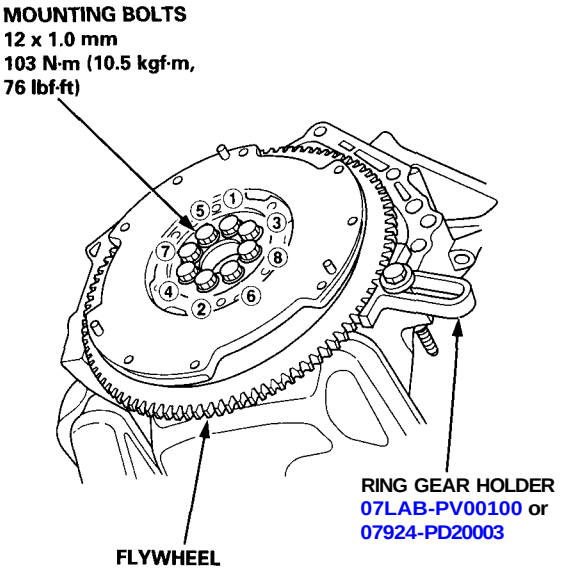

5. Install the special tool, then torque the flywheel mounting bolts in a crisscross pattern as shown.

Pressure Plate, Clutch Disc

Installation

1. Install the ring gear holder.

2. Apply grease to the splines of the clutch disc, then install the clutch disc using the special tools as shown.

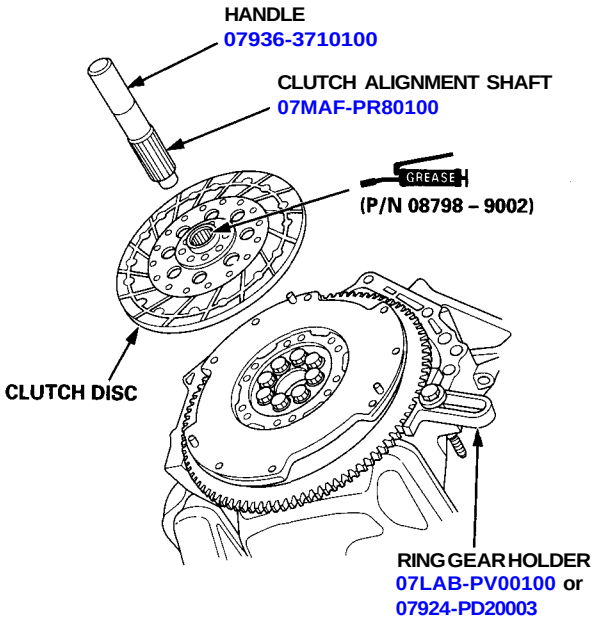

3. Install the release bearing on the pressure plate.

4. Install the pressure plate. Make sure the release bearing does not come off.

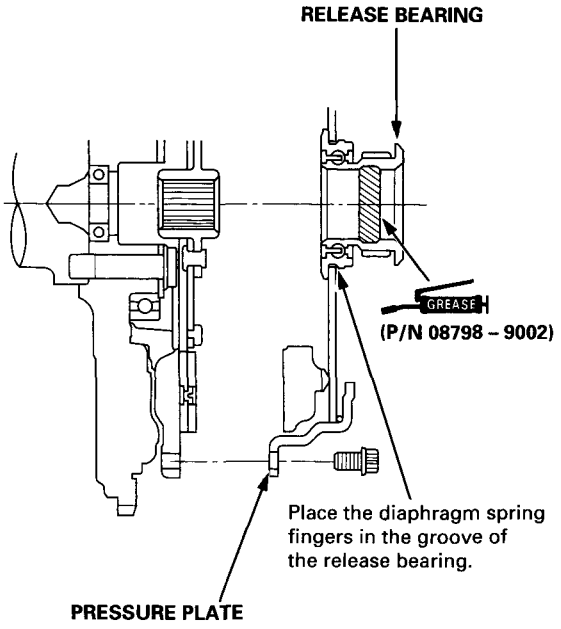

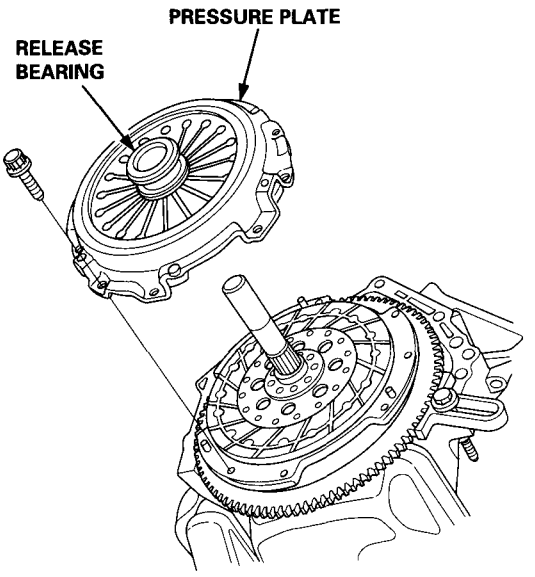

5. Torque the mounting bolts in a crisscross pattern as shown. Tighten them in several steps to prevent warping the diaphragm spring. Make sure the release bearing does not come off.

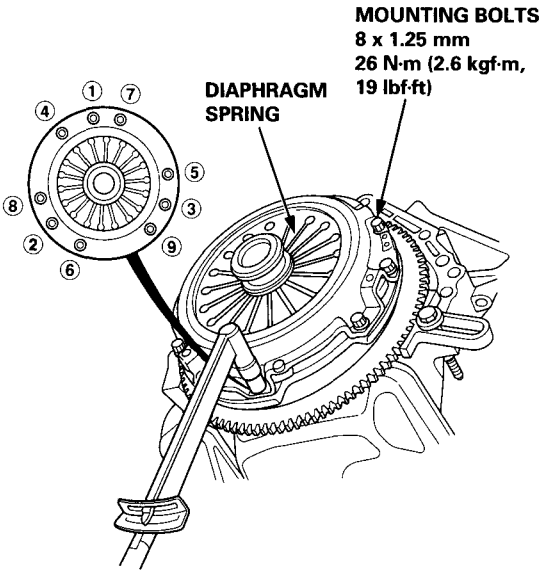

6. Remove the special tools.

7. Reinstall the transmission (see section 13).

Manual Transmission

Special Tools 13–2
Maintenance
  Transmission Oil 13–3
Back–up Light Switch Neutral Position Switch
  Replacement 13–3
Reverse Lockout System
  Component Location Index 13–4
  System Description 13–5
  Troubleshooting Flowchart 13–7
Solenoid
  Test 13–11
  Replacement 13–11
Transmission Assembly
  Removal 13–12
  Component Location Index 13–16
  Reassembly 13–48
  Installation 13–53
Transmission Housing
  Removal 13–18
Reverse Shift Arm, Reverse Shift Fork
  Clearance Inspection 13–19
Reverse Idler Gear Shaft Assembly
  Removal 13–20
  Disassembly/ Reassembly 13–21
Reverse Shift Fork Assembly
  Disassembly/ Reassembly 13–22
Mainshaft, Countershaft, Differential Assemblies
  Removal 13–22
Shift Lever, Select Lever
  Removal 13–23
Change Holder Assembly
  Disassembly/ Reassembly 13–25
Change Holder Assembly, Shift Fork
  Clearance Inspection 13–26
Shift Fork, Syncro Sleeve
  Clearance Inspection 13–27
Shift Fork Assembly
  Disassembly/ Reassembly 13–28
Mainshaft Assembly
  Component Location Index
    ’97–99 Models 13–29
    ’00–05 Models 13–2c
  Clearance Inspection
    ’97–99 Models 13–30
    ’00–05 Models 13–3c
  Disassembly 13–32
  Inspection 13–33
  Reassembly 13–34
Countershaft Assembly
  Component Location Index 13–35
  Clearance Inspection 13–36
  Disassembly 13–37
  Inspection 13–38
  Reassembly 13–38
Syncro Sleeve, Syncro Hub
  Inspection 13–40
  Installation 13–40
Synchro Ring, Gear
  Inspection 13–41
Oil Pump
  Disassembly/ Reassembly 13–42
  Clearance Inspection 13–43
Mainshaft Oil Seal (Clutch Housing)
  Replacement 13–44
Countershaft Bearing (Clutch Housing)
  Replacement 13–45
Mainshaft Thrust Shim
  Adjustment 13–46
Gearshift Mechanism
  Overhaul 13–57

Special Tools

Ref. No.	Tool Number	Description	Qty	Page Reference
①	07GAJ – PG20110	Mainshaft Holder	1	13-47
②	07GAJ – PG20130	Mainshaft Base	1	13-47
*③	07736 – A01000A	Adjustable Bearing Puller, 25 – 40 mm	1	13-45
④	07746 – 0010400	Attachment, 52 x 55 mm	1	13-44
⑤	07746 – 0010500	Attachment, 62 x 68 mm	1	13-45
⑥	07746 – 0030100	Driver, 40 mm I.D.	1	13-47
⑦	07746 – 0030400	Attachment, 35 mm I.D.	1	13-47
⑧	07749 – 0010000	Driver	1	13-44, 13-45

* Must be used with commercially available 3/8" – 16 Slide Hammer

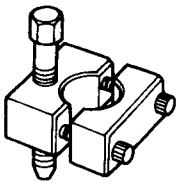

①

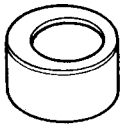

②

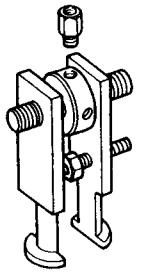

③

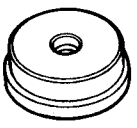

④

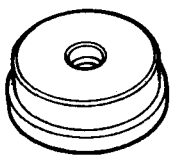

⑤

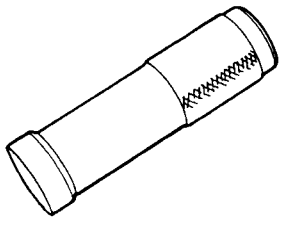

⑥



⑦

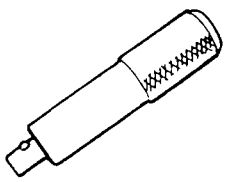

⑧

Transmission Oil

1. Check the oil at normal operating temperature (the cooling fan comes on), engine OFF, and the vehicle on level ground.

2. Remove the oil filler plug, then check the level and condition of the oil.

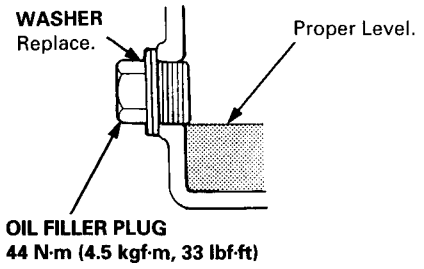

3. The oil level must be up to the fill hole. If it is below the hole, add oil until it runs out, then reinstall the oil filler plug.

4. If the transmission oil is dirty, remove the drain plug, and drain the oil.

5. Reinstall the drain plug with a new washer, and refill the transmission with the recommended oil to the proper level.

6. Reinstall the oil filler plug with a new washer.

NOTE: The drain plug washer should be replaced at every oil change.

Oil Capacity
2.65 ℓ (2.80 US qt, 2.33 Imp qt) at oil change.
2.90 ℓ (3.06 US qt, 2.55 Imp qt) at overhaul.

Always use Genuine Honda Manual Transmission Fluid (MTF). Using motor oil can cause stiffer shifting because it does not contain the proper additives.

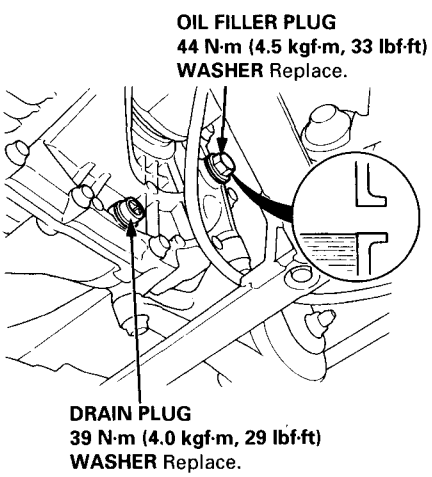

Back-up Light Switch Neutral Position Switch

Replacement

NOTE: To check the switch, see section 23.

1. Disconnect the connector, then remove the switch connector from the connector clamp.

2. Remove the switch.

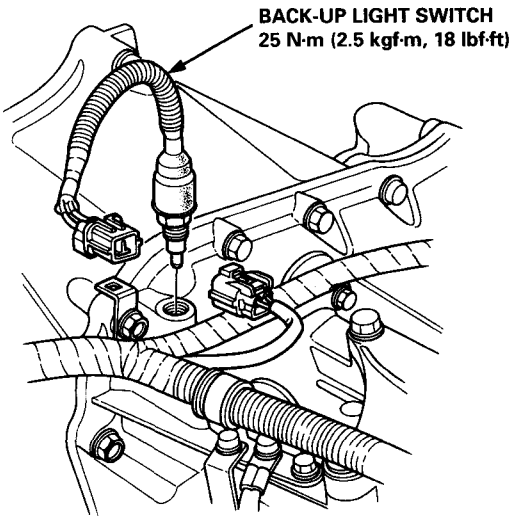

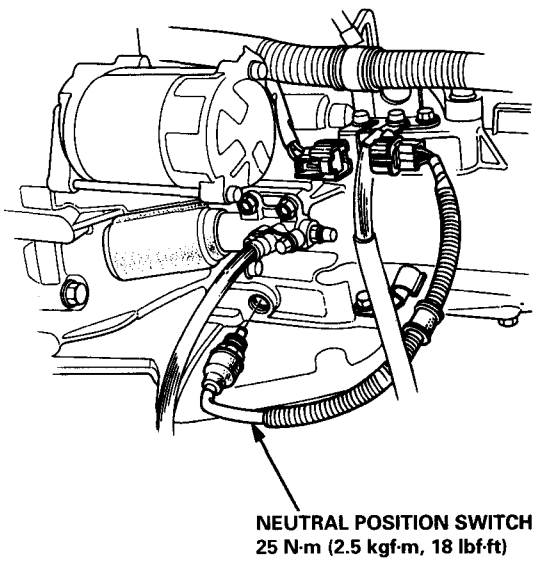

3. Apply liquid gasket (P/N 08718-0001) to the switch threads, then install the switch.

Reverse Lockout System

Component Location

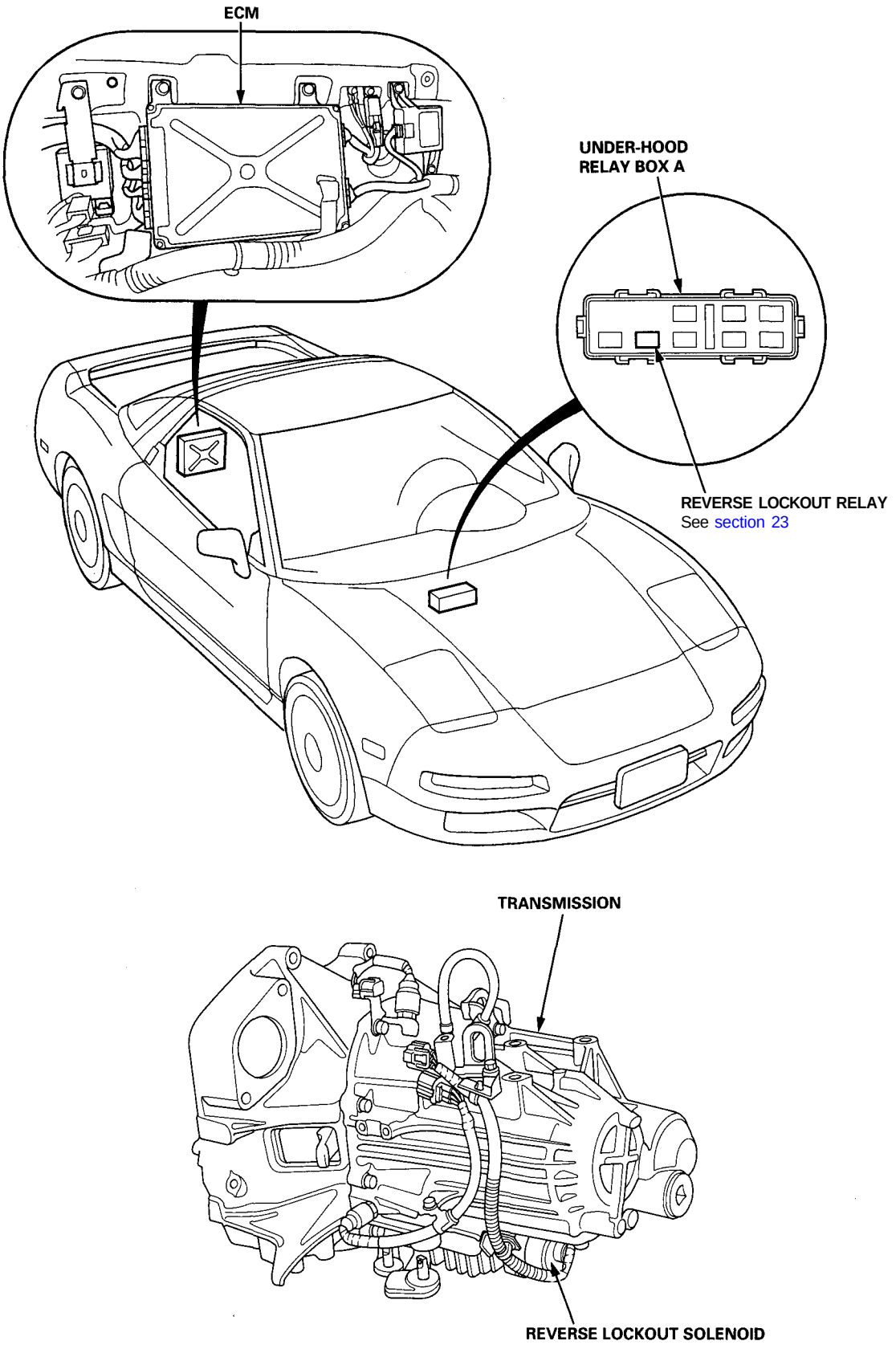

Description

At a vehicle speed of 19 mph (30 km/h) or more, a signal from the vehicle speed sensor (VSS) activates the reverse lockout solenoid, which causes the select lock pin to extend. As a result, the interlock cannot rotate to the reverse shift piece making it impossible to select reverse gear.
At a vehicle speed of 16 mph (25 km/h) or less, the signal from the VSS is interrupted which turns off the reverse lockout solenoid. The select lock return spring pulls the select lock pin back, enabling the interlock to move freely so that reverse gear can be selected.

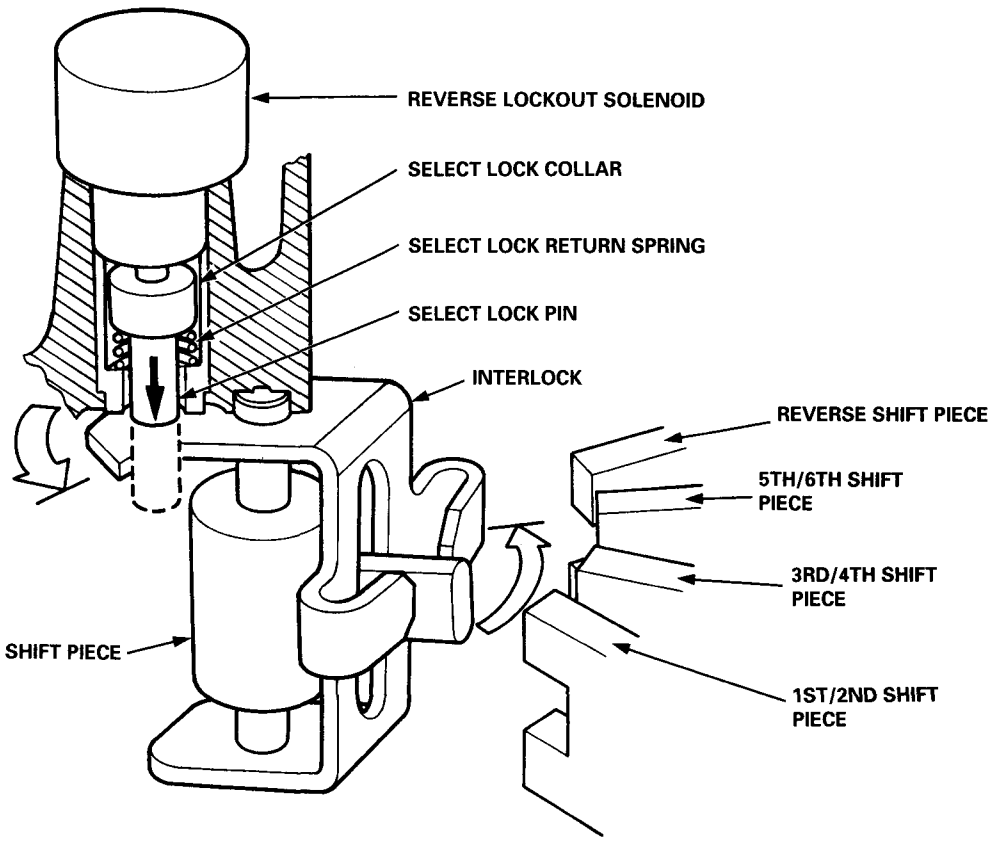

Reverse lockout system does not work.

Check the PGM-FI system for any diagnostic trouble codes (DTCs).

Are there any codes? — YES → **Perform the indicated PGM-FI system troubleshooting (see section 11).**

NO

Check fuse No. 5 (15 A) in the under-dash fuse box.

Is the fuse OK? — NO → **Replace the fuse.**

YES

Remove the reverse lockout relay from the under-hood relay box A, and test the relay (section 23).

Is the relay OK? — NO → **Replace the relay.**

YES

Turn the ignition switch ON (II).

Measure voltage between terminals No. 1 and No. 2 in the reverse lockout relay connector and body ground.

Is there battery voltage? — NO → **Repair open in the YEL[1] wire between the No. 5 (15 A) fuse and the under-hood relay box A.**

YES

(To page 13-8)

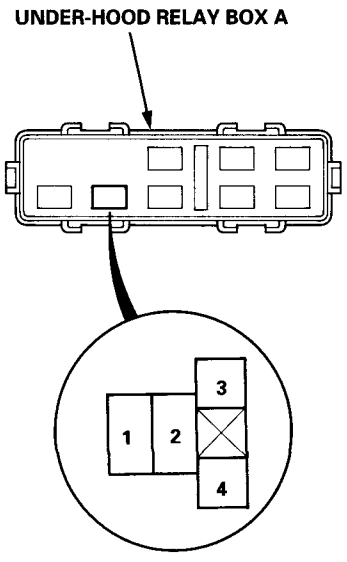

View from terminal side.

(cont'd)

Reverse Lockout System

Troubleshooting (cont'd)

(From page 13-7)

Measure the voltage between ECM connector terminal A17 and body ground. (See section 11 for how to use the Backprove Sets.)

ECM CONNECTOR A (26P)

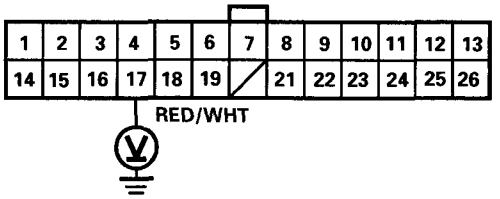

Wire side of female terminals

Is there battery voltage?

NO → Disconnect the A connector from the ECM.

Is there battery voltage?

YES → **Check for poor connections or loose wires at the ECM. If OK, substitute a known-good ECM and retest.**

NO → **Repair open in the RED/WHT wire between the under-hood relay box A and the ECM.**

YES

Disconnect the 3P connector to the reverse lockout solenoid.

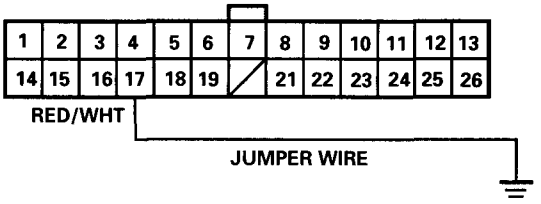

Connect a jumper lead between A17 terminal of the test harness and body ground.

Check for voltage between the GRN/WHT (+) in the wire harness side of the 3P connector and body ground.

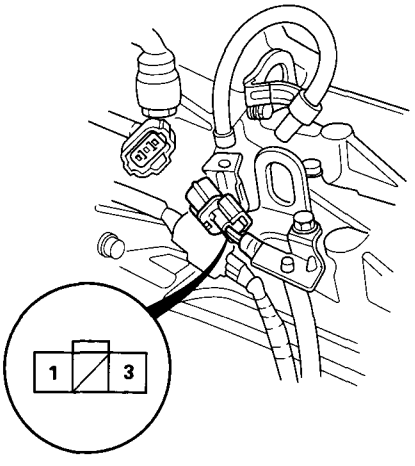

Wire side of female terminals

(To page 13-9)

(From page 13-8)

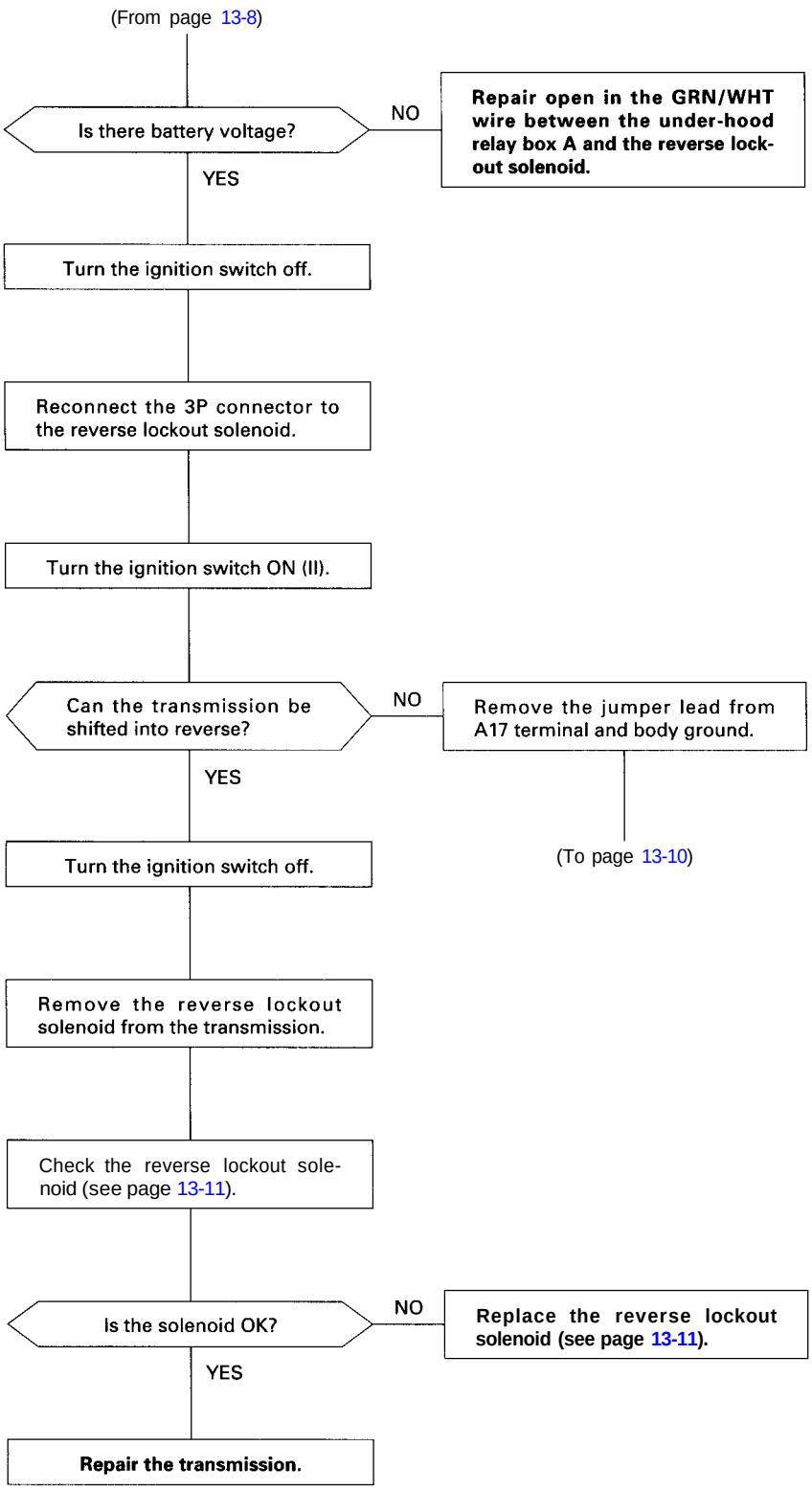

(To page 13-10)

(cont'd)

Reverse Lockout System

Troubleshooting (cont'd)

(From page 13-9)

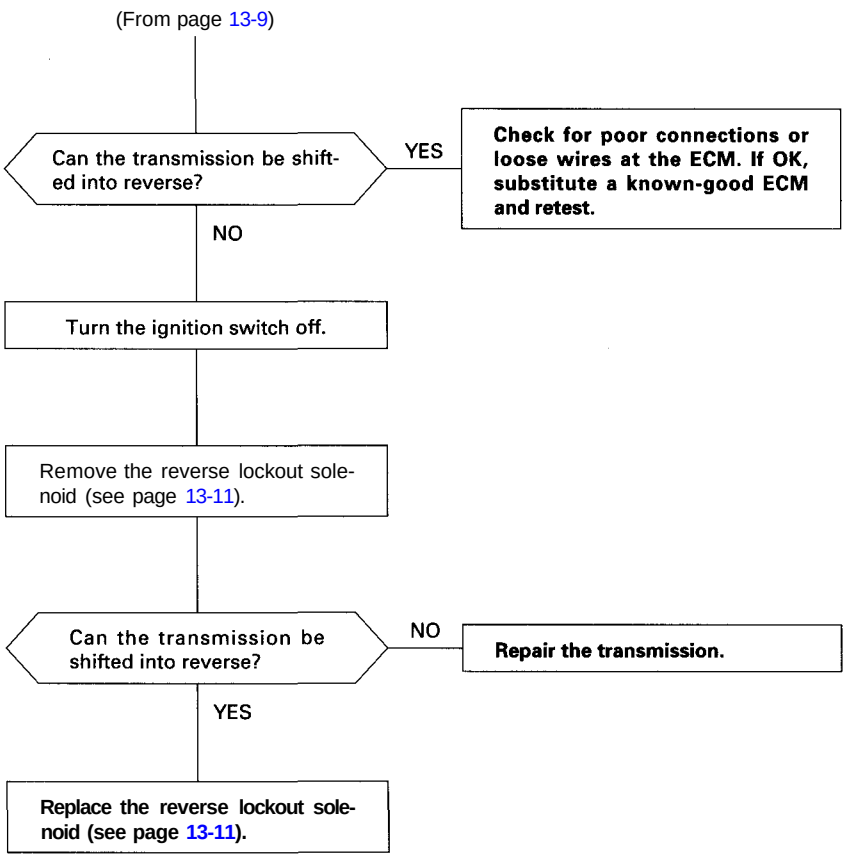

Solenoid Test

1. Disconnect the 3P connector of the reverse lockout solenoid.
2. Measure the resistance between No. 1 and No. 3 terminals.

Standard: 10.74 – 11.86 Ω

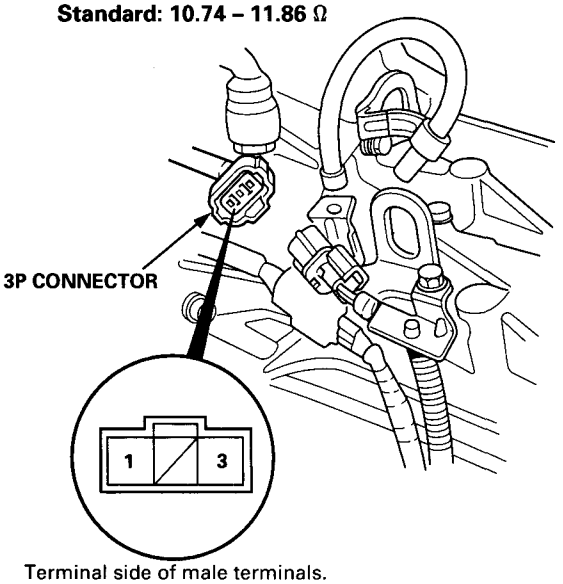

Terminal side of male terminals.

If the resistance is not within the standard, replace the reverse lockout solenoid.

3. Test reverse lockout solenoid operation by connector battery power to the No. 1 terminal and ground to the No. 3 terminal. A clicking sound should be heard.
4. If the reverse lockout solenoid no clicking sound is heard, replace it.

Solenoid Replacement

1. Disconnect the 3P connector.

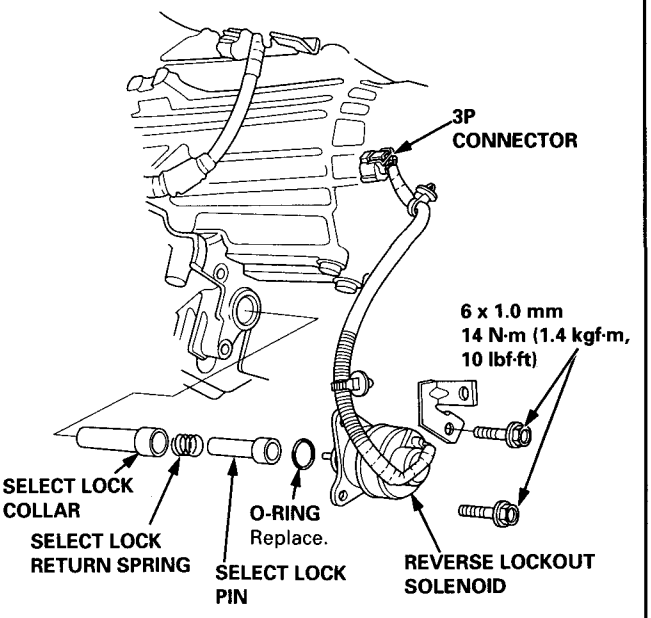

2. Remove the reverse lockout solenoid from the transmission.
3. Remove the select lock pin and select lock return spring.
4. Install the reverse lockout solenoid in the reverse order of removal.

Transmission Assembly

Removal

⚠ WARNING Make sure lifts are placed properly, and hoist brackets are attached to correct positions (see section 1).

1. Check and record the rear wheel alignment (see section 18).
2. Disconnect the battery negative (-) and positive (+) cables from the battery.
3. Drain transmission oil. Reinstall the drain plug with a new washer.
4. Remove the strut bar.
5. Remove the air cleaner assembly.
6. Remove the connectors from the control box, and remove the control box. Do not remove the vacuum tubes from the control box.
7. Remove the wire harness holder, jumper connector and transmission ground cable.
8. Disconnect the back-up light switch, neutral position switch, differential speed sensor, reverse lockout solenoid, and vehicle speed sensor (VSS) connectors.
9. Disconnect the starter motor cables, then remove the starter motor.
10. Remove the transmission mount.
11. Remove the two transmission housing bolts.

☆: Corrosion resistant bolt/nut

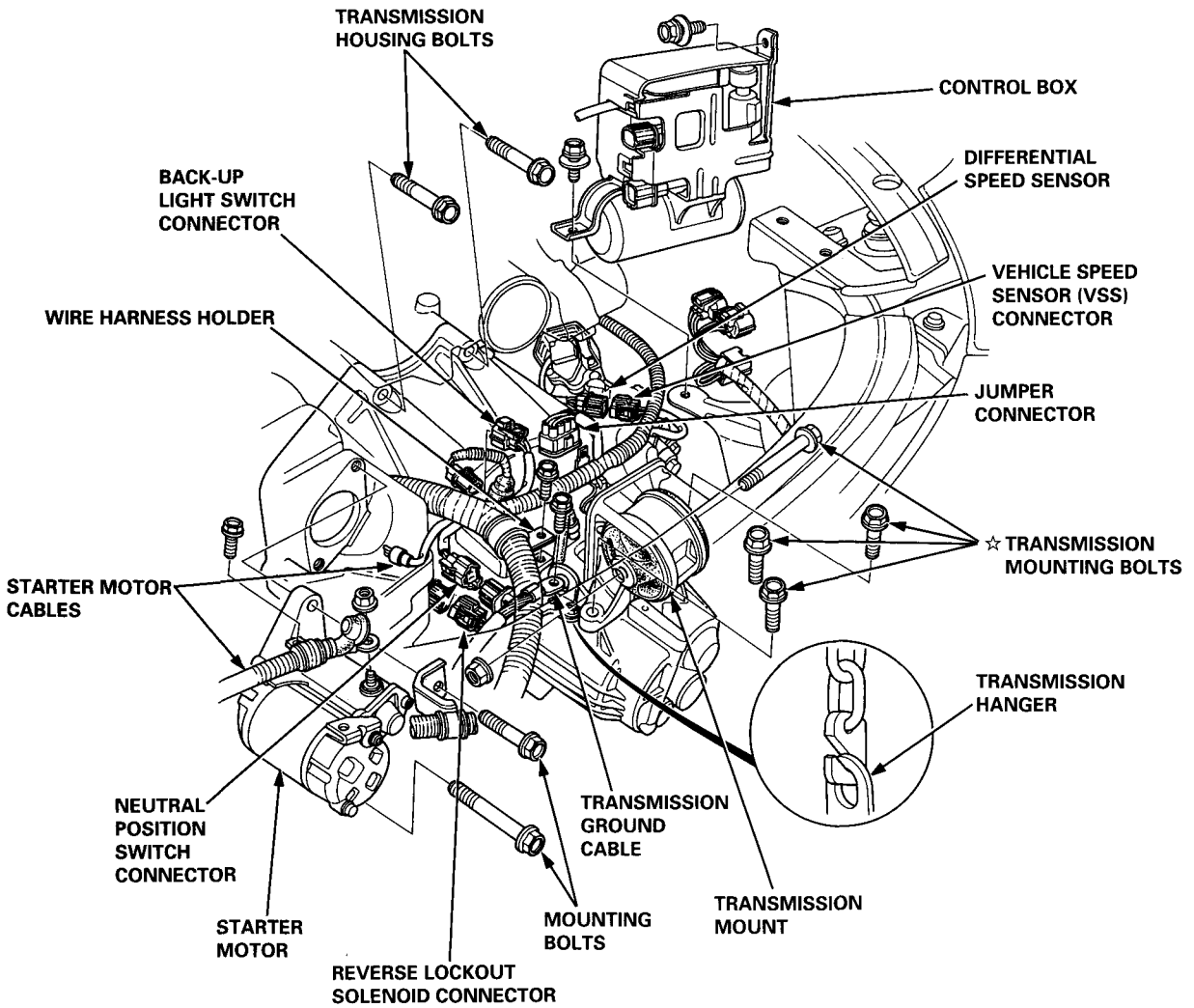

12. Remove the parking brake cable holders from the rear beam rod.

☆: Corrosion resistant bolt/nut

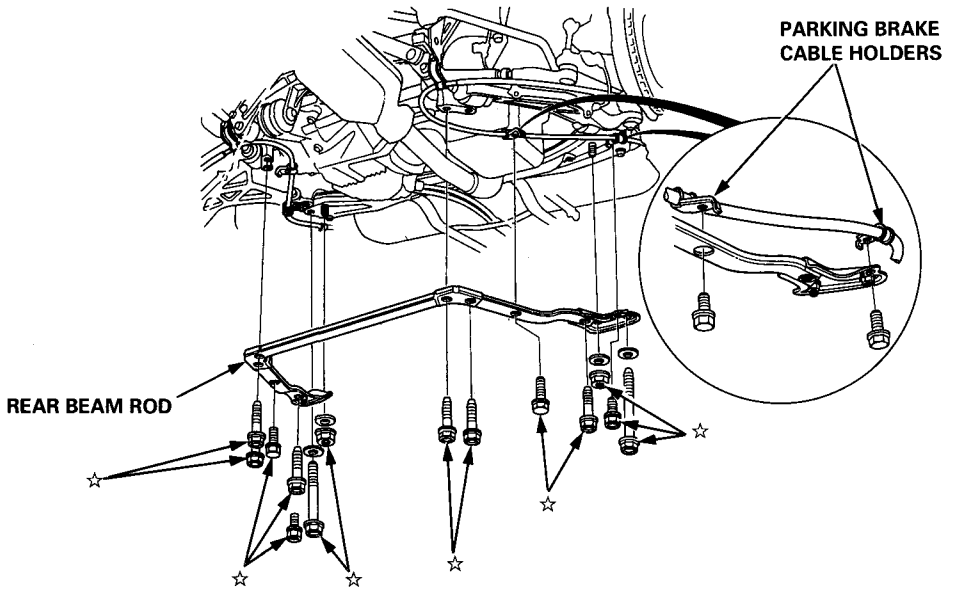

13. Remove the rear beam rod.
14. Remove the parking brake cable holder from the rear sub frame, and the wheel sensor wire clamp from the lower control arm.

☆: Corrosion resistant bolt/nut

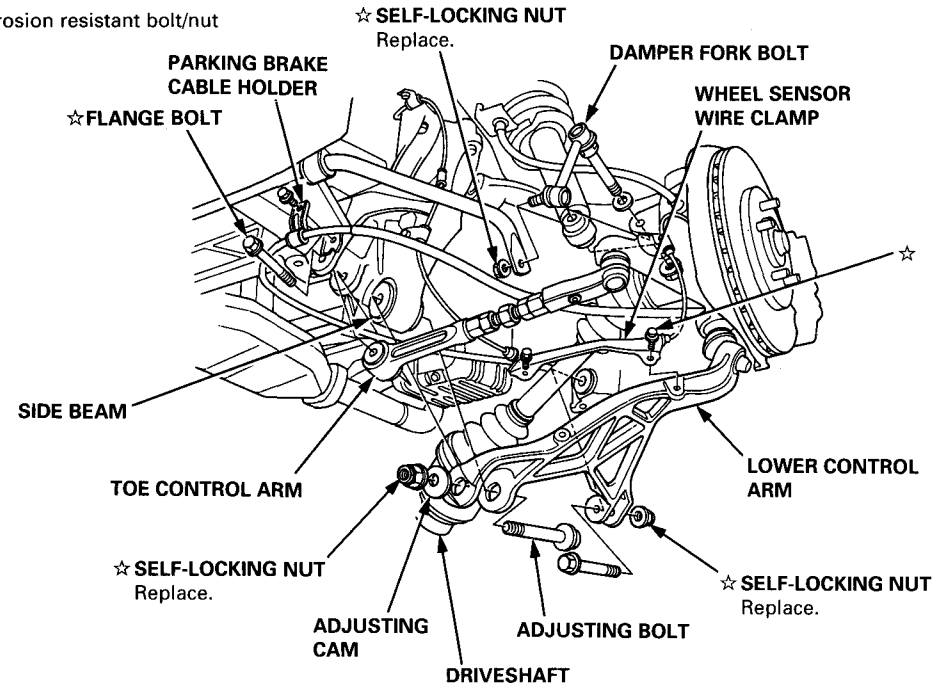

15. Remove the flange bolt, and separate the toe control arm from the side beam (see section18).
16. Remove the damper fork bolt (see section 18).
17. Remove the adjusting bolt and the flange bolt, then separate the lower control arm from the side beam (see section 18).
18. Pry the driveshaft out of the differential. Pull and remove it. (cont'd)

Transmission Assembly

Removal (cont'd)

19. Remove the intermediate shaft heat cover and the intermediate shaft mounting bolts.

☆: Corrosion resistant bolt/nut

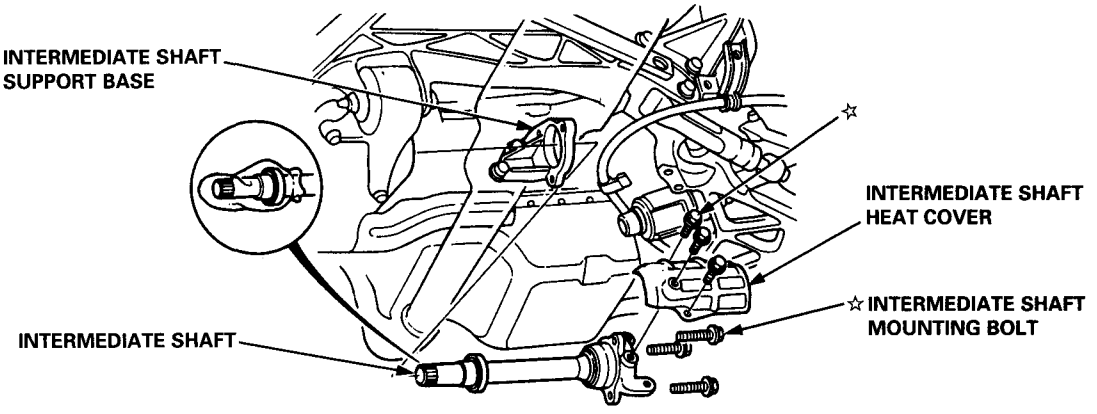

20. Pry the intermediate shaft out of the differential. Pull and remove it. Coat all precision finished surfaces with clean engine oil or grease. Tie plastic bags over the driveshaft ends.
21. Remove the parking brake cable holder from the rear sub frame, and the wheel sensor wire clamp from the lower control arm.

☆: Corrosion resistant bolt/nut

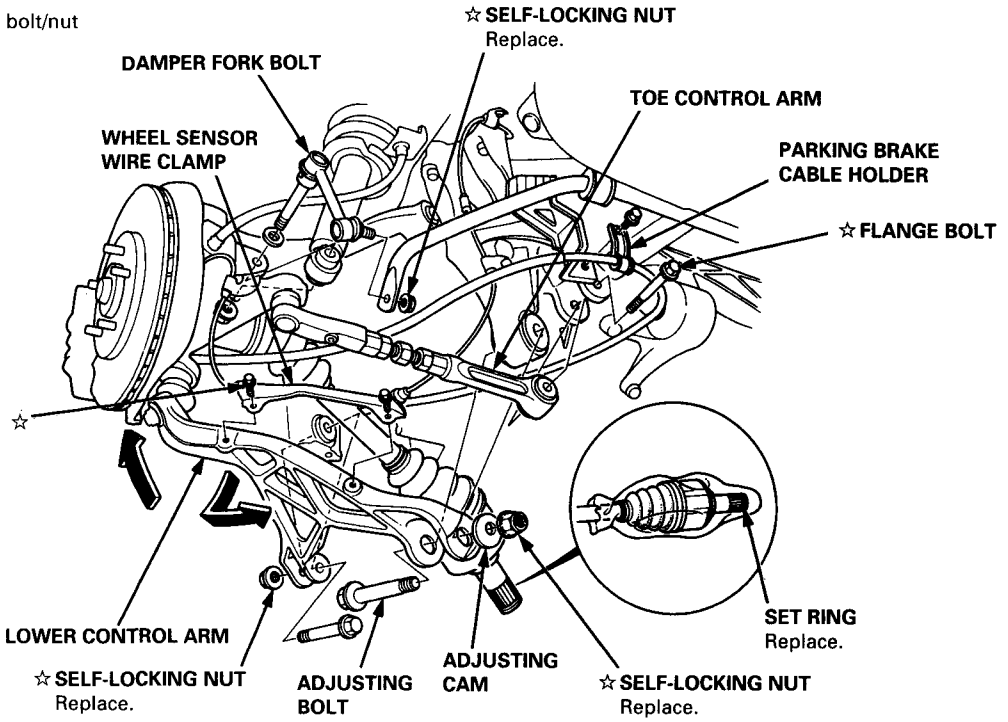

22. Remove the flange bolt, and separate the toe control arm from the side beam (see section 18).
23. Remove the damper fork bolt (see section 18).
24. Remove the adjusting bolts, and the flange bolt, then separate the lower control arm from the side beam.
25. Pry the driveshaft out of the differential. Pull and remove it. Coat all precision finished surfaces with clean engine oil or grease. Tie plastic bags over the driveshaft ends.

26. Remove the one of the upper control arm mounting bolt.
27. Remove the lower cover, change wire bracket and upper cover.
28. Remove the shift cable and select cable.
29. Remove the slave cylinder from the transmission. Do not operate the clutch pedal once the slave cylinder has been removed.
30. Remove the release fork from the clutch release hanger, then hang the release fork on the clutch housing.

☆: Corrosion resistant bolt/nut

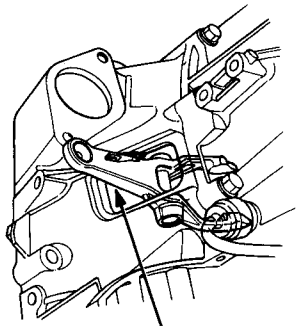

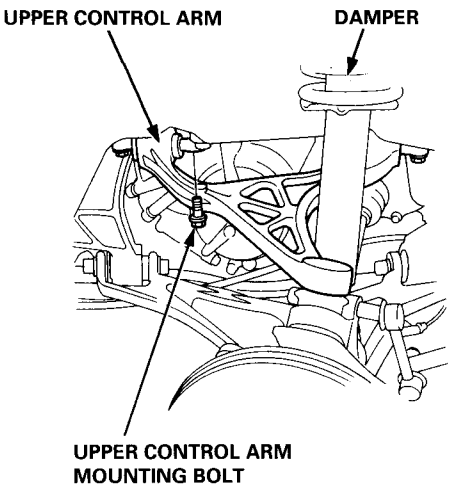

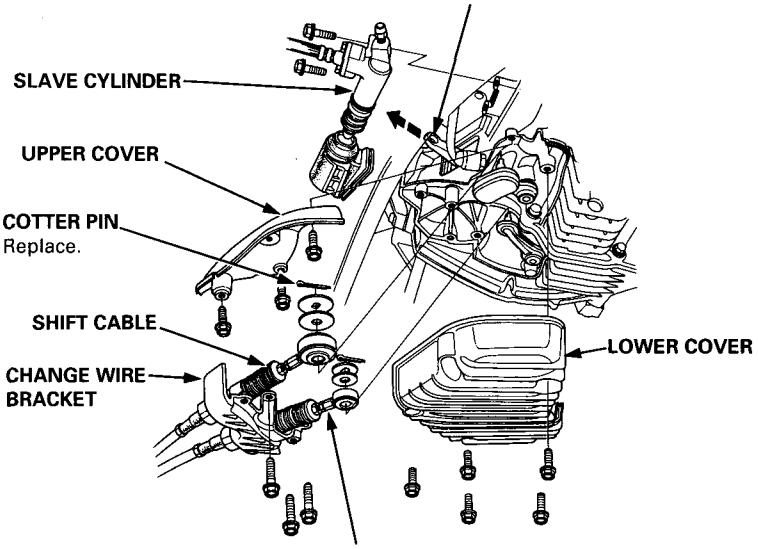

31. Remove the clutch housing cover.

☆: Corrosion resistant bolt/nut

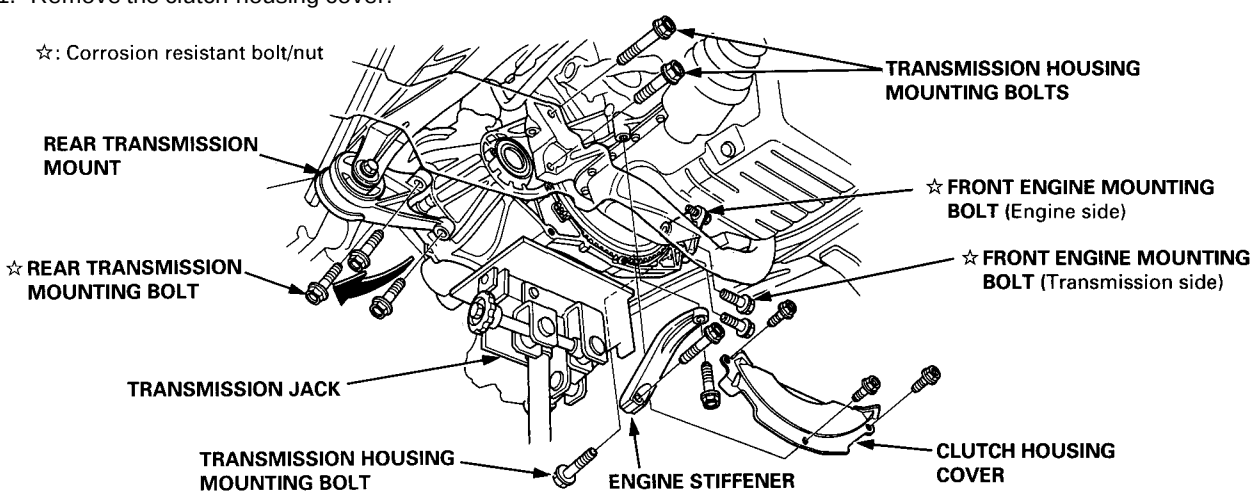

32. Attach a chain hoist to the transmission hangers.
33. Place a jack under the transmission, and raise the transmission just enough to take weight off mounts.
34. Remove the front engine mounting bolts on the transmission side, and retighten the bolt on the engine side. Loosen the front engine mounting bolt on the engine side, but do not remove it. After removing the two bolts on the transmission side, be sure to retighten the bolt on the engine side.
35. Remove the rear transmission mounting bolts and engine stiffener.
36. Remove the transmission housing mounting bolts.
37. Pull the transmission away from the engine until it clears the mainshaft, then lower it on the transmission jack.

Illustrated Index

Clean all parts thoroughly in solvent and dry with compressed air.

Lubricate all parts with oil before reassembly.

NOTE:

- This transmission uses no gaskets between the major housings; use liquid gasket (P/N 08718-0001). If 20 minutes have passed after applying liquid gasket, reapply it and assemble the housings and allow it to cure at least 30 minutes after assembly before filling the transmission with oil.
- Always clean the magnet ㉔ whenever the transmission housing is disassembled.

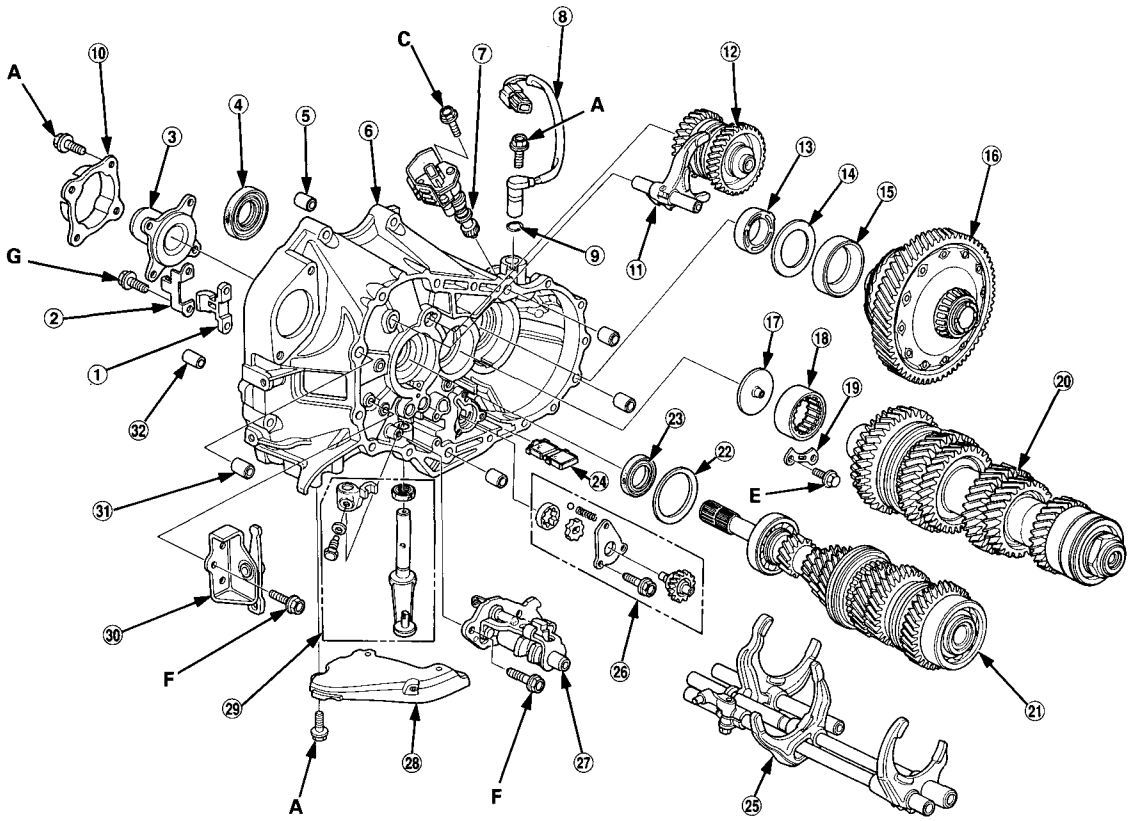

① **CLUTCH RELEASE HANGER**
② **RELEASE HANGER SPRING**
③ **RELEASE BEARING GUIDE**
④ **40 x 68 x 12.5 mm OIL SEAL**
Replace.
⑤ **14 x 20 mm DOWEL PIN**
⑥ **CLUTCH HOUSING**
⑦ **VEHICLE SPEED SENSOR (VSS)**
⑧ **DIFFERENTIAL SPEED SENSOR**
⑨ **O-RING**
Replace.
⑩ **RELEASE BEARING GUIDE COVER**
⑪ **REVERSE SHIFT FORK ASSEMBLY**
Disassembly/Reassembly, page 13-22
⑫ **REVERSE IDLE GEAR SHAFT ASSEMBLY**
Disassembly/Reassembly, page 13-21
⑬ **OIL GUIDE RING**
⑭ **90 mm WASHER**
⑮ **BEARING OUTER RACE**
⑯ **DIFFERENTIAL ASSEMBLY**
See section 15
⑰ **OIL GUIDE PLATE**
⑱ **NEEDLE BEARING**
Inspect for wear and operation.
⑲ **BEARING RETAINING PLATE**
⑳ **COUNTERSHAFT ASSEMBLY**
Index, page 13-35
㉑ **MAINSHAFT ASSEMBLY**
Index, page 13-29
㉒ **75 mm SPRING WASHER**
㉓ **32 x 46 x 7 mm OIL SEAL**
Replace.
㉔ **TRANSMISSION MAGNET**
㉕ **SHIFT FORK ASSEMBLY**
Disassembly/Reassembly, page 13-28
㉖ **OIL PUMP ASSEMBLY**
Disassembly/Reassembly, page 13-42
㉗ **CHANGE HOLDER ASSEMBLY**
Disassembly/Reassembly, page 13-25
㉘ **UPPER COVER**
㉙ **SELECT LEVER ASSEMBLY**
• Removal, page 13-23
• Installation, page 13-48
㉚ **REVERSE SHIFT ARM**
㉛ **14 x 20 mm DOWEL PIN**
㉜ **10 x 20 mm DOWEL PIN**

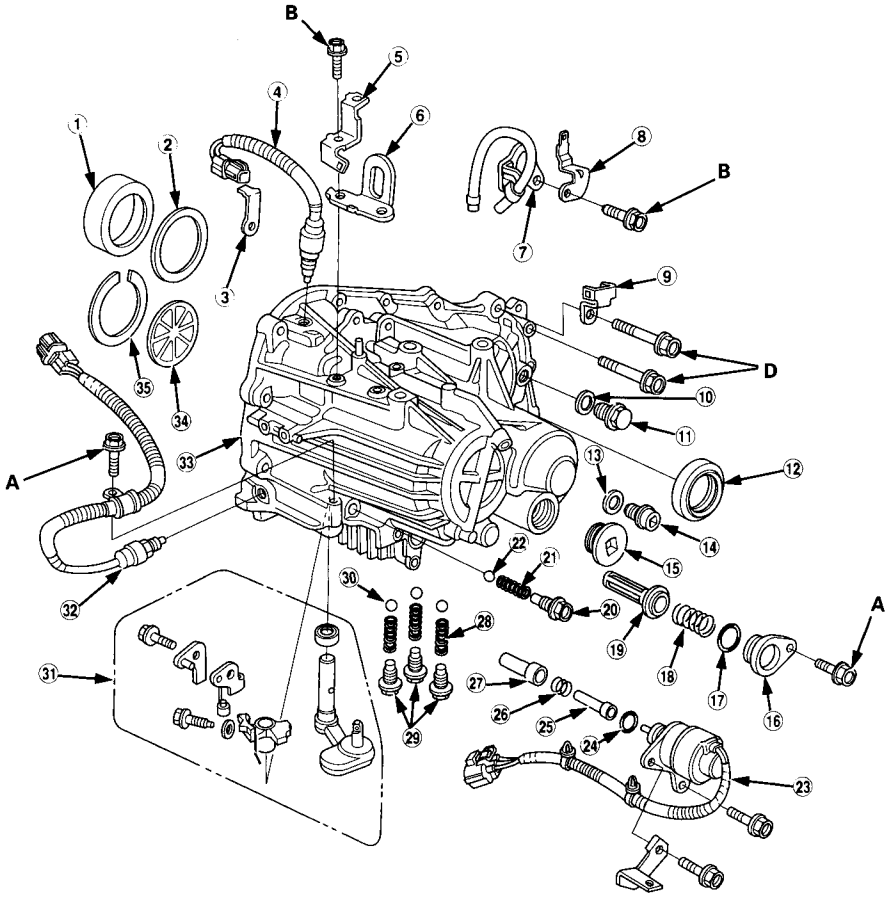

① **BEARING OUTER RACE**
② **75 mm THRUST SHIM**
Selection.
③ **CLAMP**
④ **BACK-UP LIGHT SWITCH**
25 N-m (2.5 kgf-m, 18 lbf-ft)
⑤ **CLAMP**
⑥ **TRANSMISSION HANGER B**
⑦ **TRANSMISSION HANGER A**
⑧ **CLAMP**
⑨ **CLAMP**
⑩ WASHER Replace.
⑪ **OIL FILLER PLUG**
44 N-m (4.5 kgf-m, 33 lbf-ft)
⑫ **42 x 63 x 12.5 mm OIL SEAL**
Replace.
⑬ WASHER Replace.
⑭ **DRAIN PLUG**
39 N-m (4.0 kgf-m, 29 lbf-ft)
⑮ **36 mm SEALING BOLT**
34 N-m (3.5 kgf-m, 25 lbf-ft)
⑯ **STRAINER COVER**
⑰ O-RING Replace.
⑱ **STRAINER SET SPRING**
⑲ **OIL PUMP STRAINER**
⑳ **14 mm SEALING BOLT**
32 N-m (3.3 kgf-m, 24 lbf-ft)
㉑ **SPRING (L. 25 mm)**
㉒ **STEEL BALL (3/8 in)**
㉓ **REVERSE LOCKOUT SOLENOID**
㉔ O-RING Replace.
㉕ **SELECT LOCK PIN**
㉖ **SELECT LOCK RETURN SPRING**
㉗ **SELECT LOCK COLLAR**
㉘ **SPRING (L. 30 mm)**
㉙ **12 mm SEALING BOLT**
22 N-m (2.2 kgf-m, 16 lbf-ft)
㉚ **STEEL BALL (5/16 in)**
㉛ **SHIFT LEVER ASSEMBLY**
Removal, page 13-23
Installation, page 13-48
㉜ **NEUTRAL POSITION SWITCH**
25 N-m (2.5 kgf-m, 18 lbf-ft)
㉝ **TRANSMISSION HOUSING**
㉞ **OIL GUIDE PLATE**
㉟ **82 mm THRUST SHIM**
Selection, page 13-46

Torque Value	Bolt Size
A – 12 N·m (1.2 kgf·m, 9 lbf·ft)	6 x 1.0 mm
B – 24 N·m (2.4 kgf·m, 17 lbf·ft)	8 x 1.25 mm
C – 25 N·m (2.6 kgf·m, 19 lbf·ft)	8 x 1.25 mm
D – 44 N·m (4.5 kgf·m, 33 lbf·ft)	10 x 1.25 mm
E – 12 N·m (1.2 kgf·m, 9 lbf·ft)	6 x 1.0 mm SPECIAL BOLT
F – 15 N·m (1.5 kgf·m, 11 lbf·ft)	6 x 1.0 mm SPECIAL BOLT
G – 25 N·m (2.6 kgf·m, 19 lbf·ft)	8 x 1.25 mm SPECIAL BOLT
H – 14 N·m (1.4 kgf·m, 10 lbf·ft)	6 x 1.0 mm

Transmission Housing

Removal

1. Place the clutch housing on two pieces of wood thick enough to keep the mainshaft from hitting the workbench.

2. Remove the back up light switch, neutral position switch, reverse lockout solenoid, differential speed sensor and vehicle speed sensor (VSS).

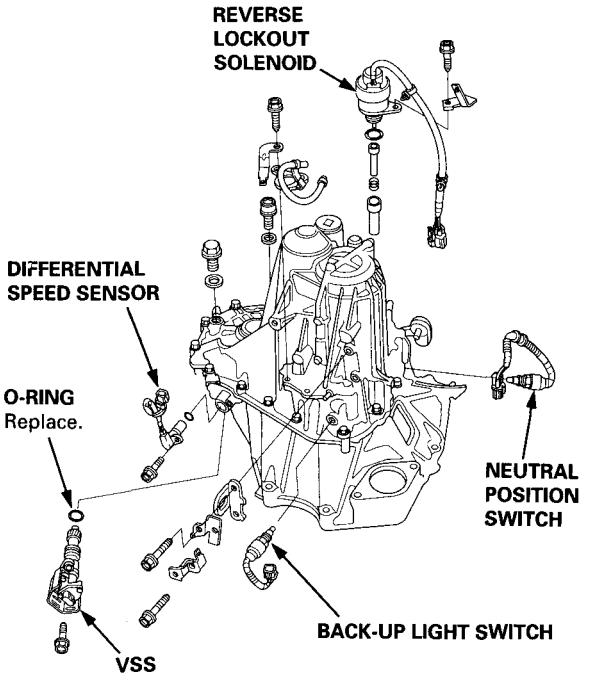

3. Remove the sealing bolts, springs and steel balls.

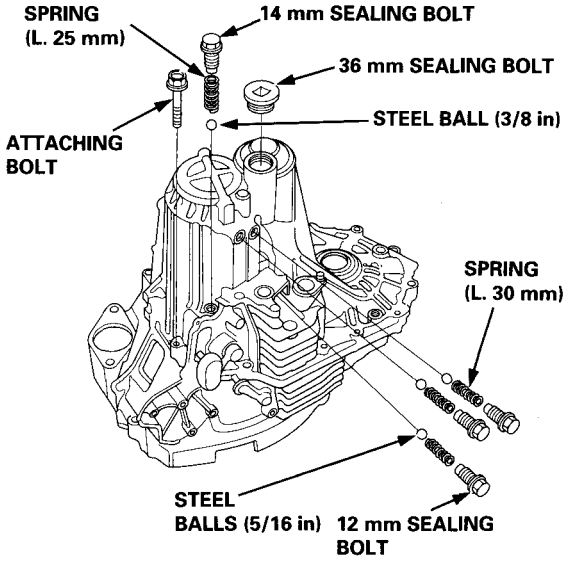

4. Remove the transmission housing attaching bolts in a crisscross pattern in several steps.

5. Remove the 36 mm sealing bolt.

6. Expand the snap ring on the countershaft ball bearing, and remove it from the groove using a pair of snap ring plier.

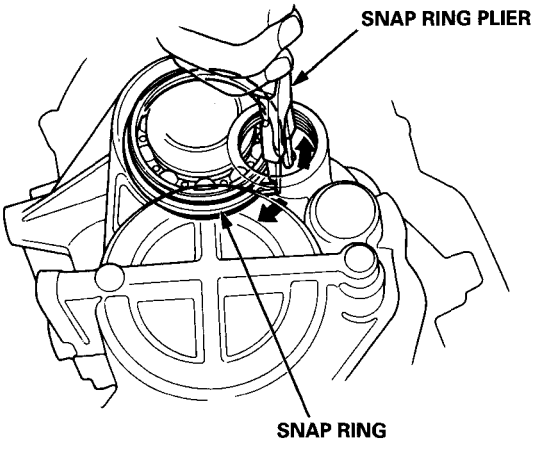

7. Separate the clutch housing from the transmission housing.

8. Remove the thrust shim and oil guide plate from the transmission housing.

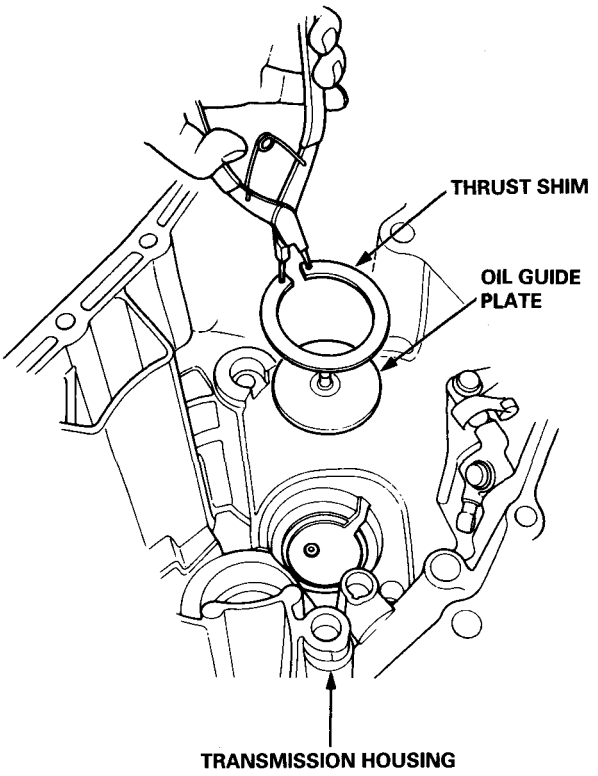

Reverse Shift Arm, Reverse Shift Fork

Clearance Inspection

1. Measure the clearance between the reverse shift arm and the reverse shift piece.

Standard: 0.05 – 0.30 mm (0.002 – 0.012 in)
Service Limit: 0.5 mm (0.02 in)

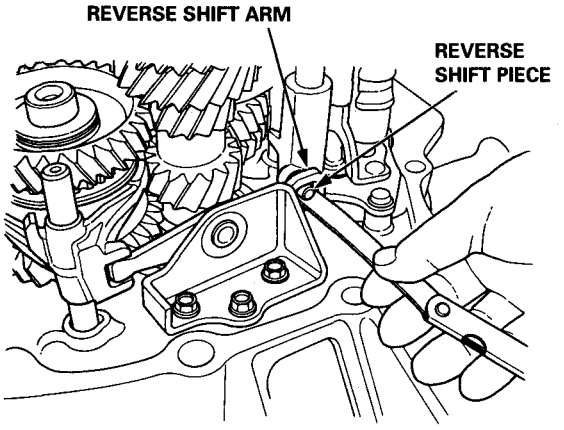

2. If the clearance exceeds the service limit, measure the width of the groove in the reverse shift arm.

Standard: 7.05 – 7.20 mm (0.278 – 0.283 in)

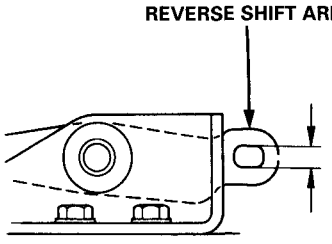

If the width of the groove exceeds the standard, replace the reverse shift arm with a new one.
If the width of the groove is within the standard, replace the reverse shift piece with a new one.

3. Measure the clearance between the reverse shift arm and reverse shift fork.

Standard: 0.05 – 0.35 mm (0.002 – 0.014 in)
Service Limit: 0.5 mm (0.02 in)

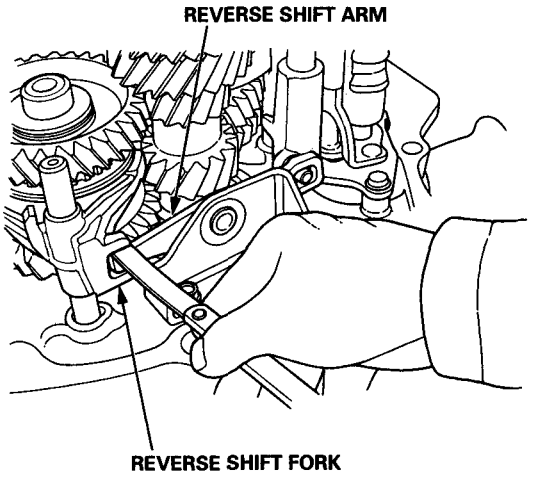

4. If the clearance exceeds the service limit, measure the width of the reverse shift arm.

Standard: 12.8 – 13.0 mm (0.504 – 0.512 in)

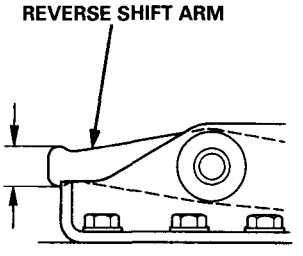

If the width is less than the standard, replace the reverse shift arm with a new one.
If the width is within the standard, replace the reverse shift fork with a new one.

(cont'd)

Reverse Shift Arm, Reverse Shift Fork

Clearance Inspection (cont'd)

5. Measure the clearance between the reverse shift fork and reverse synchro sleeve.

Standard: 0.45 – 0.65 mm (0.018 – 0.026 in)
Service Limit: 1.0 mm (0.039 in)

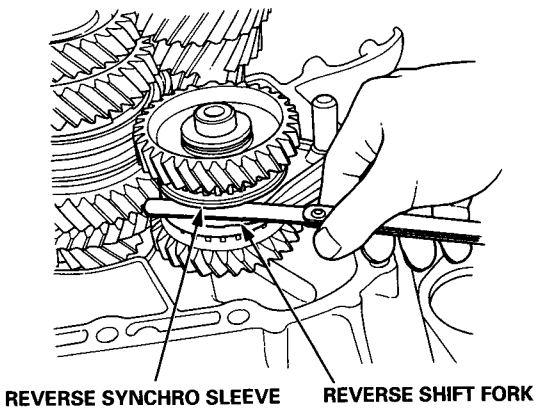

6. If the clearance exceeds the service limit, measure the thickness of the shift fork fingers.

Standard: 6.4 – 6.5 mm (0.252 – 0.256 in)

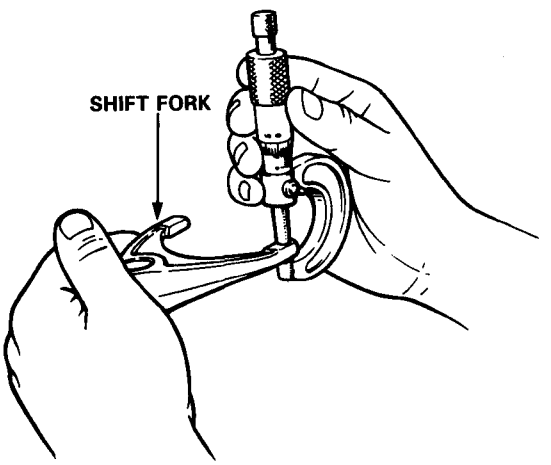

If the trickiness is less than the standard, replace the reverse shift fork with a new one.
If the trickiness is within the standard, replace the reverse synchro sleeve with a new one.
The synchro sleeve and synchro hub should be replaced as a set.

Reverse Idler Gear Shaft Assembly

Removal

1. Remove the reverse shift arm from the clutch housing.

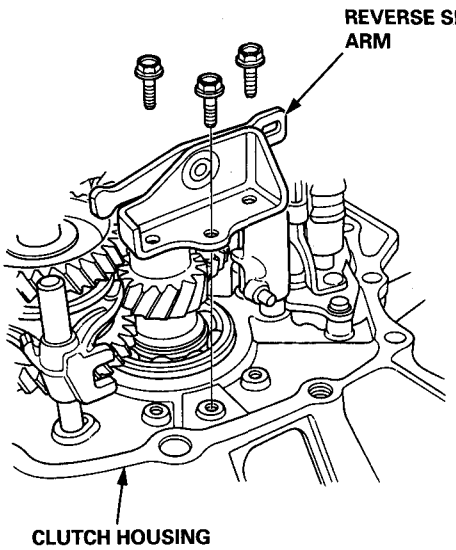

2. Shift the reverse shift fork to the driven gear side.
3. Remove the reverse shift fork assembly.

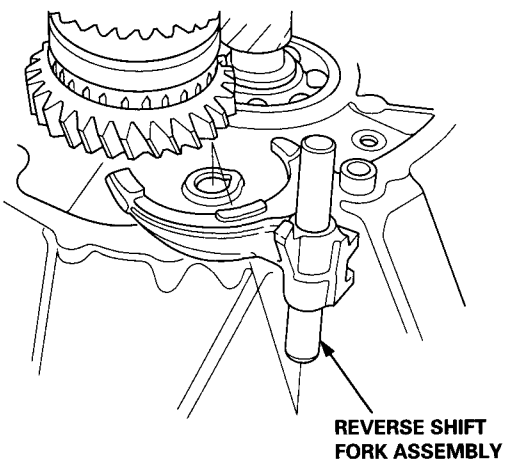

4. Remove the reverse idle gear shaft assembly.

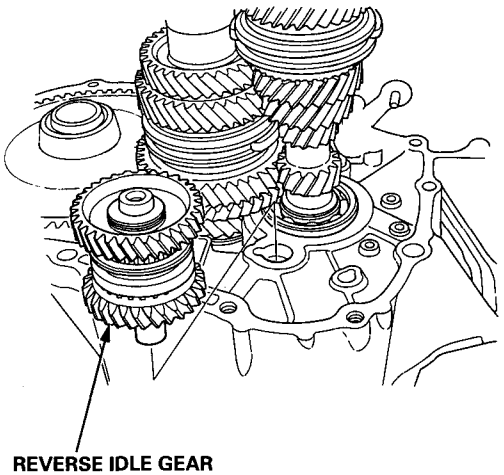

Disassembly/Reassembly

NOTE:
- The thrust needle bearings are the same size.
- The needle bearings are the same size.

OIL Prior to reassembling, clean all the parts in solvent, dry them, and apply lubricant to any contact surface.

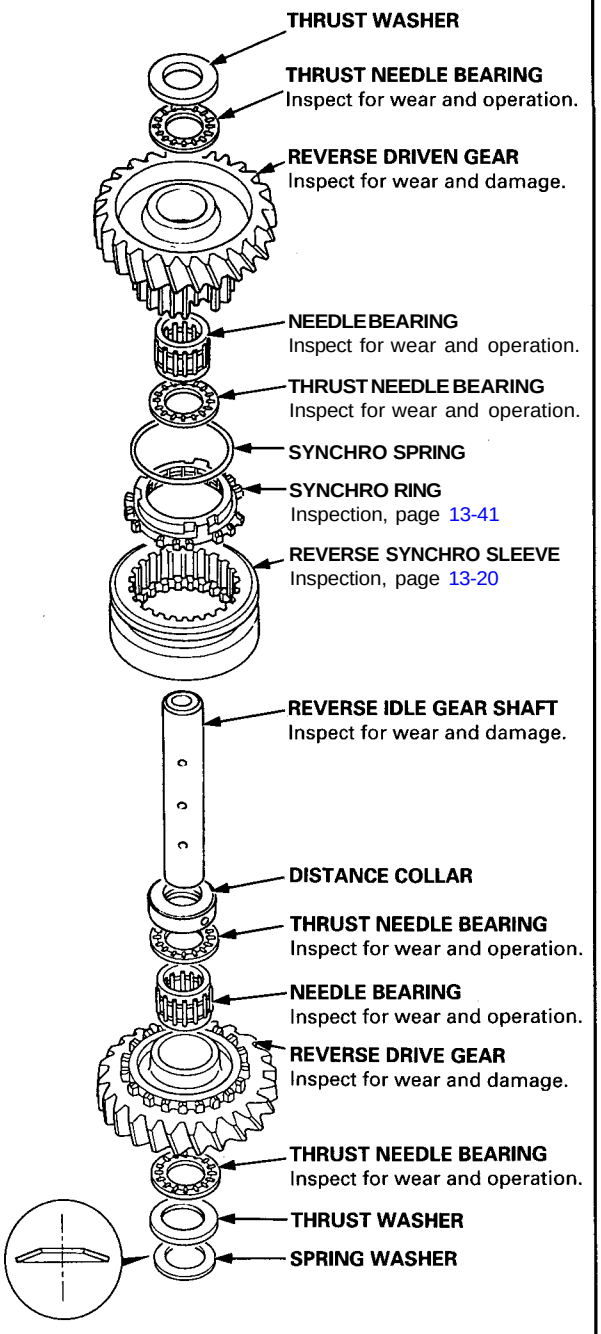

Reverse Shift Fork Assembly

Disassembly/Reassembly

NOTE: The spring pin grooves should be 180° apart.

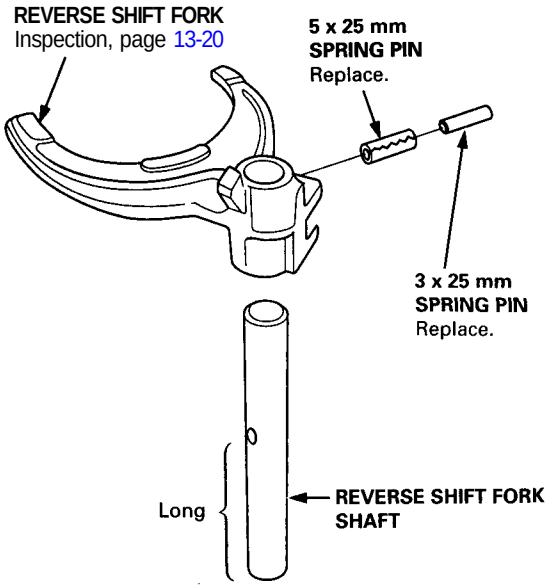

Disassembly:
Remove the 3 mm spring pin and 5 mm spring pin.

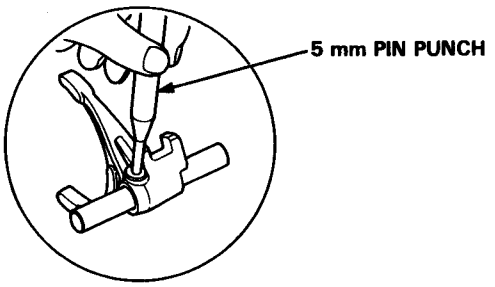

Reassembly:
Install the 5 mm spring pin first, then install the 3 mm spring pin.

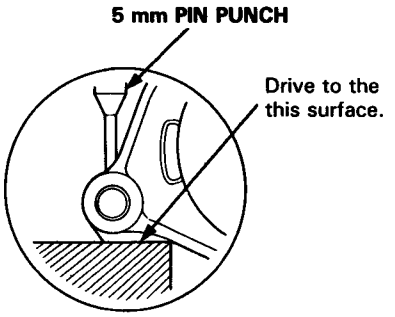

Mainshaft, Countershaft, Differential Assemblies

Removal

1. Remove the change holder assembly from the clutch housing.

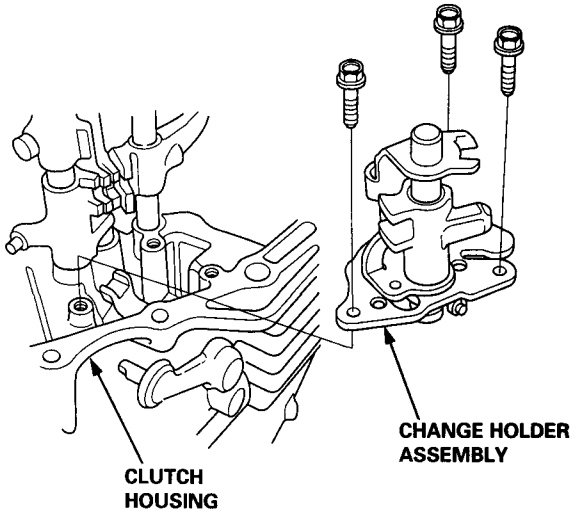

2. Tape the mainshaft splines to protect them, then remove the mainshaft assembly and countershaft assembly with the shift fork from the clutch housing.

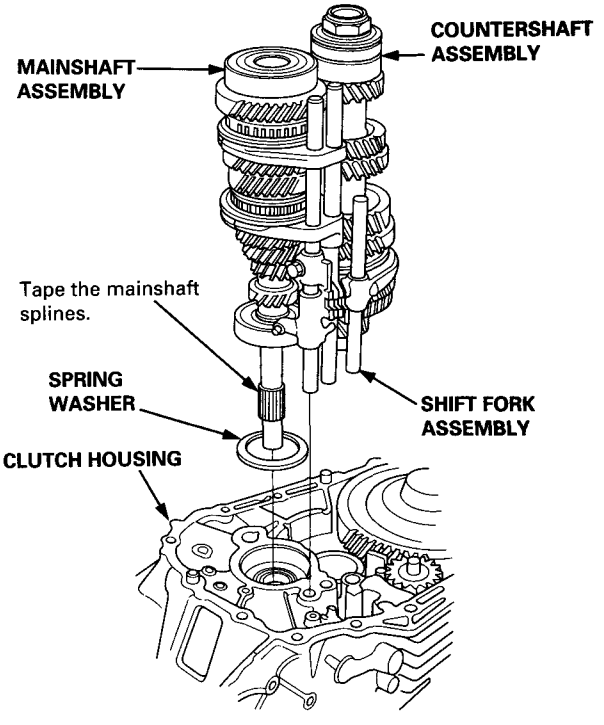

3. Remove the differential assembly from the clutch housing.

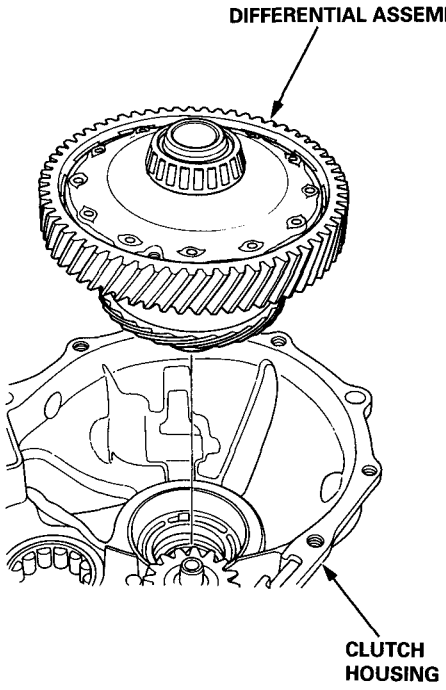

Shift Lever, Select Lever

Removal

1. Remove the shift spring set plate and shift detent spring from the transmission housing.

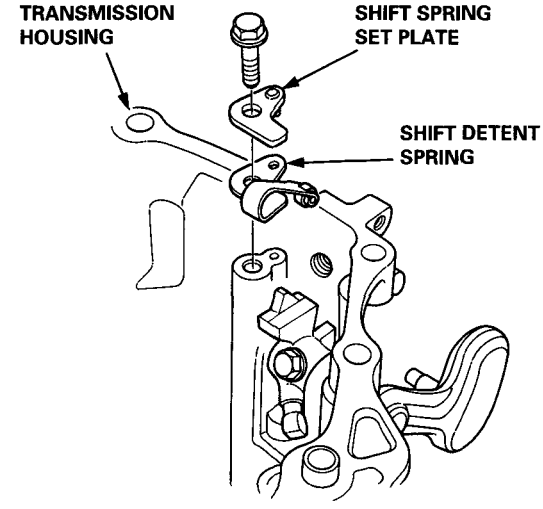

2. Remove the bolt and spring washer.

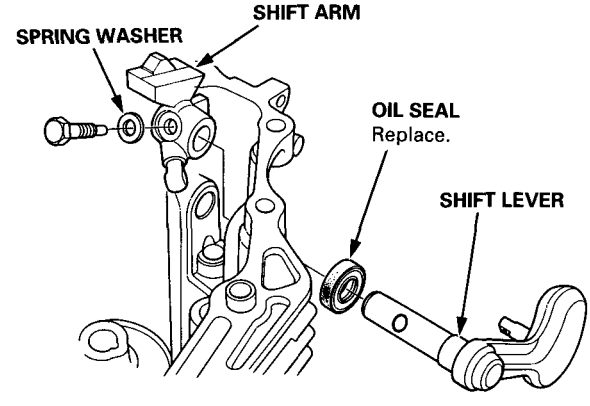

3. Pull out the shift lever, then remove the shift arm.

(cont'd)

Shift Lever, Select Lever

Removal (cont'd)

4. Remove the bolt and spring washer.

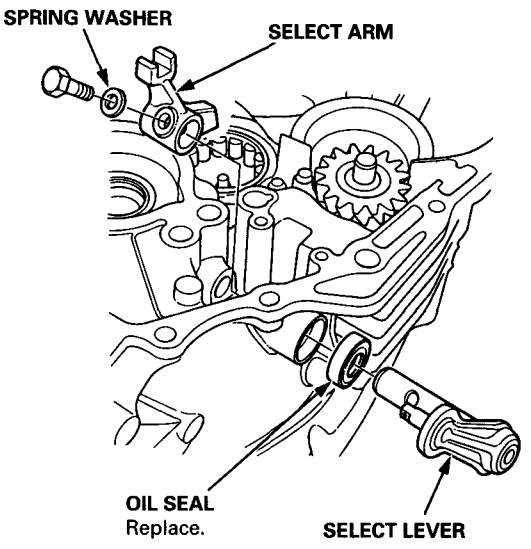

5. Pull out the select lever, then remove the select arm.

Change Holder Assembly

Disassembly/Reassembly

NOTE: Make sure the return springs are installed properly.

OIL Prior to reassembling, clean all parts in solvent, dry them, and apply lubricant to any contact surfaces.

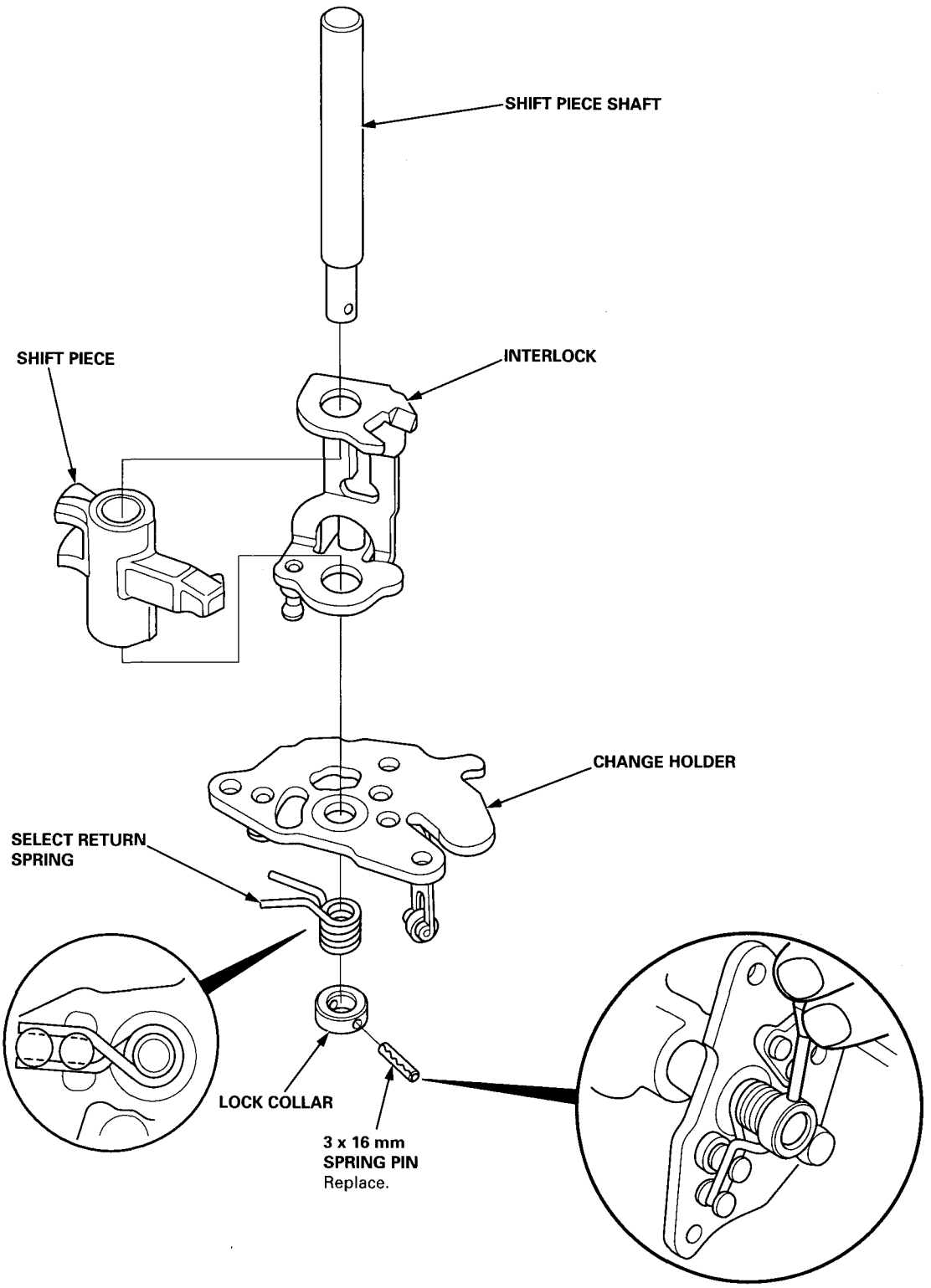

Change Holder Assembly, Shift Fork

Clearance Inspection

1. Measure the clearance between the shift piece and shift arm.

Standard: 0.05 – 0.25 mm (0.002 – 0.010 in)
Service Limit: 0.5 mm (0.020 in)

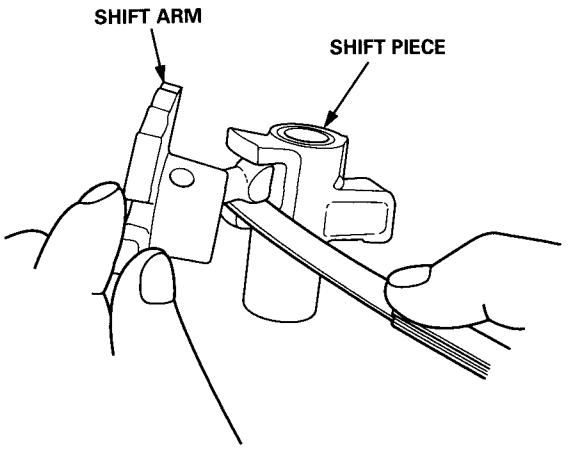

2. If the clearance exceeds the service limit, measure the width of the shift arm.

Standard: 12.9 – 13.0 mm (0.508 – 0.512 in)

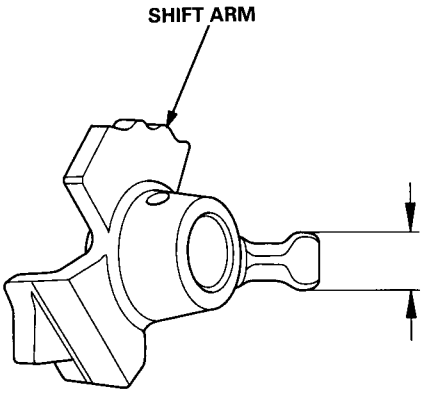

If the width of the shift arm is less than the standard, replace the shift arm with a new one.
If the width of the shift arm is within the standard, replace the shift piece with a new one.

3. Measure the clearance between the interlock and select arm.

Standard: 0.03 - 0.15 mm (0.001 - 0.006 in)

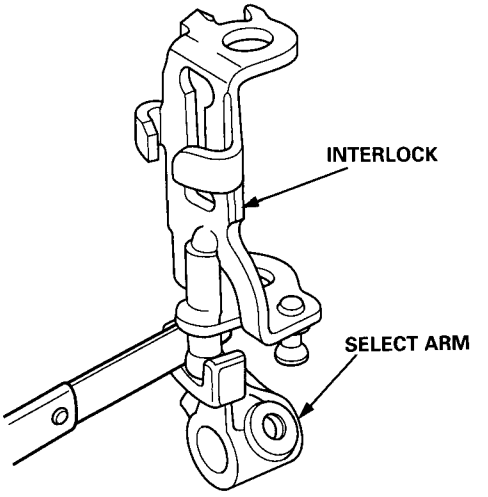

4. If the clearance exceeds the standard, measure the width of the interlock finger.

Standard: 11.95 – 12.00 mm (0.470 – 0.472 in)

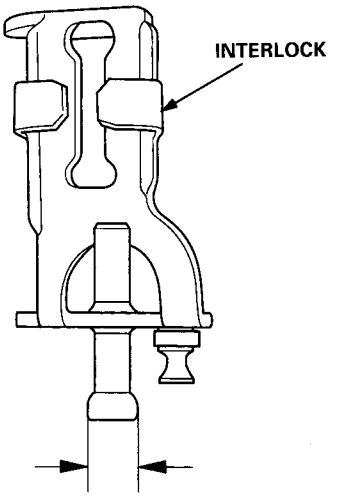

If the width of the interlock is less than the standard, replace the interlock with a new one.
If the width of the interlock is within the standard, replace the select arm with a new one.

5. Measure the clearance between the shift fork and shift piece.

Standard: 0.2 – 0.5 mm (0.008 – 0.020 in)
Service Limit: 0.6 mm (0.024 in)

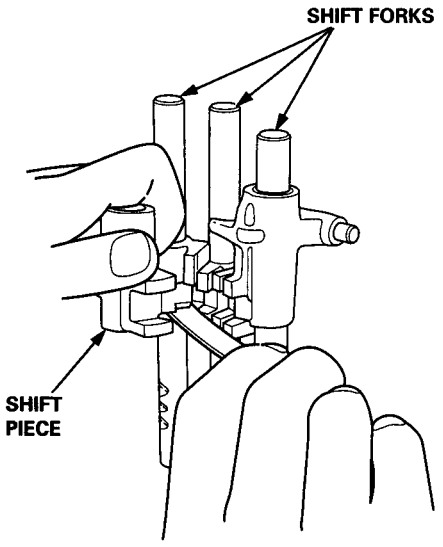

6. If the clearance exceeds the service limit, measure the width of the shift piece.

Standard: 11.9 – 12.0 mm (0.469 – 0.472 in)

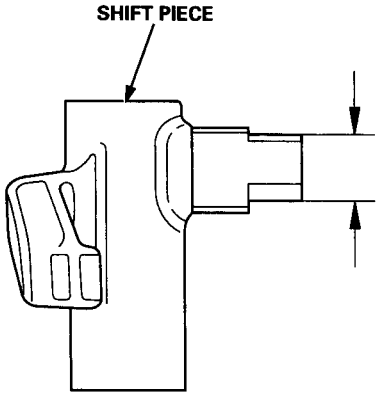

If the width of the shift piece is less than the standard, replace the shift piece with a new one.
If the width of the shift piece is within the standard, replace the shift pieces or shift forks with a new one.

Shift Fork, Synchro Sleeve

Clearance Inspection

1. Measure the clearance between each shift fork and its matching synchro sleeve..

Standard: 0.45 – 0.65 mm (0.018 – 0.026 in)
Service Limit: 1.0 mm (0.039 in)

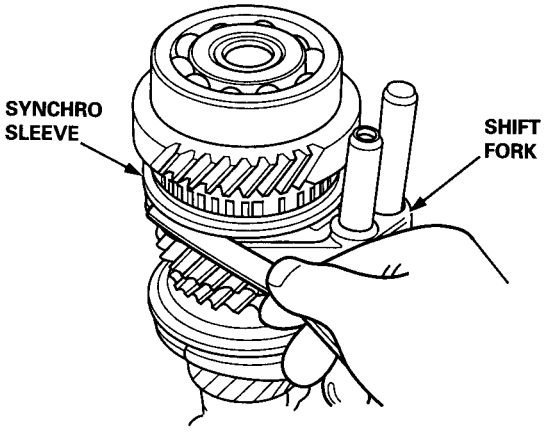

2. If the clearance exceeds the service limit, measure the width of the shift fork fingers.

Standard:
1st/2nd Shift Fork: 8.9 – 9.0 mm (0.350 – 0.354 in)
3rd/4th, 5th/6th Shift Fork: 7.4 – 7.5 mm (0.291 – 0.295 in)

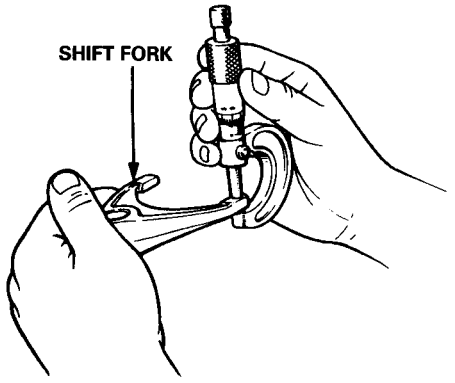

If the width of the shift fork fingers is less than the standard, replace the shift fork with a new one.
If the width of the shift fork fingers is within the standard, replace the synchro sleeve with a new one. The synchro sleeve and synchro hub should be replaced as a set.

Shift Fork Assembly

Disassembly/Reassembly

NOTE: Install the spring pins so their grooves are 180° apart.

OIL Prior to reassembling, clean all the parts in solvent, dry them, and apply lubricant to any contact surfaces.

Disassembly: Remove the 3 mm spring pin and 5 mm spring pin.

Reassembly: Install the 5 mm spring pin first, then install the 3 mm spring pin.

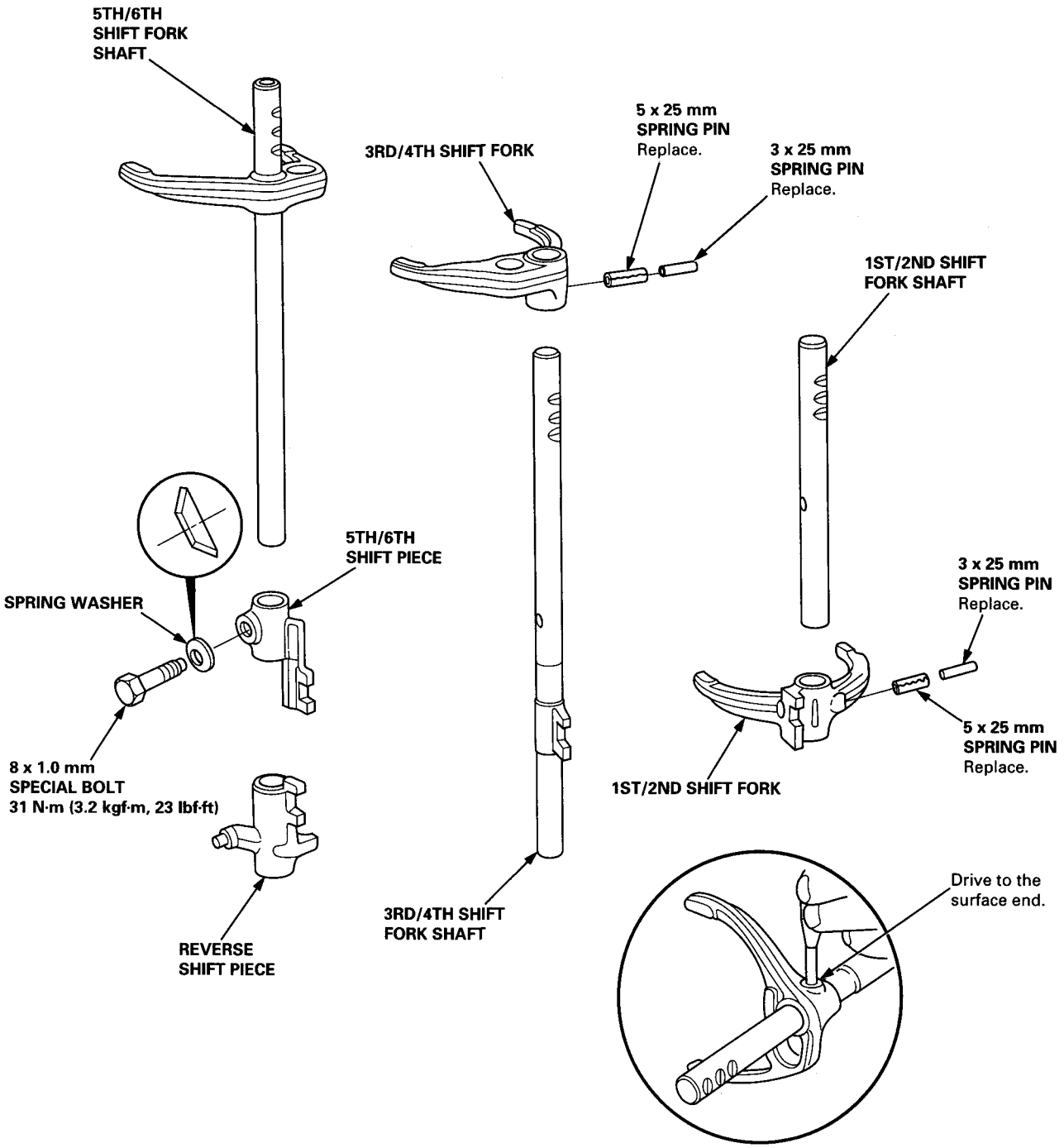

Mainshaft Assembly

Index

NOTE: The 3rd/4th and 5th/6th synchro hubs are installed with a press.

OIL Prior to reassembling, clean all the parts in solvent, dry them, and apply lubricant to any contact surfaces. The 3rd/4th and 5th/6th synchro hubs, however, should be installed with a press before lubricating them.

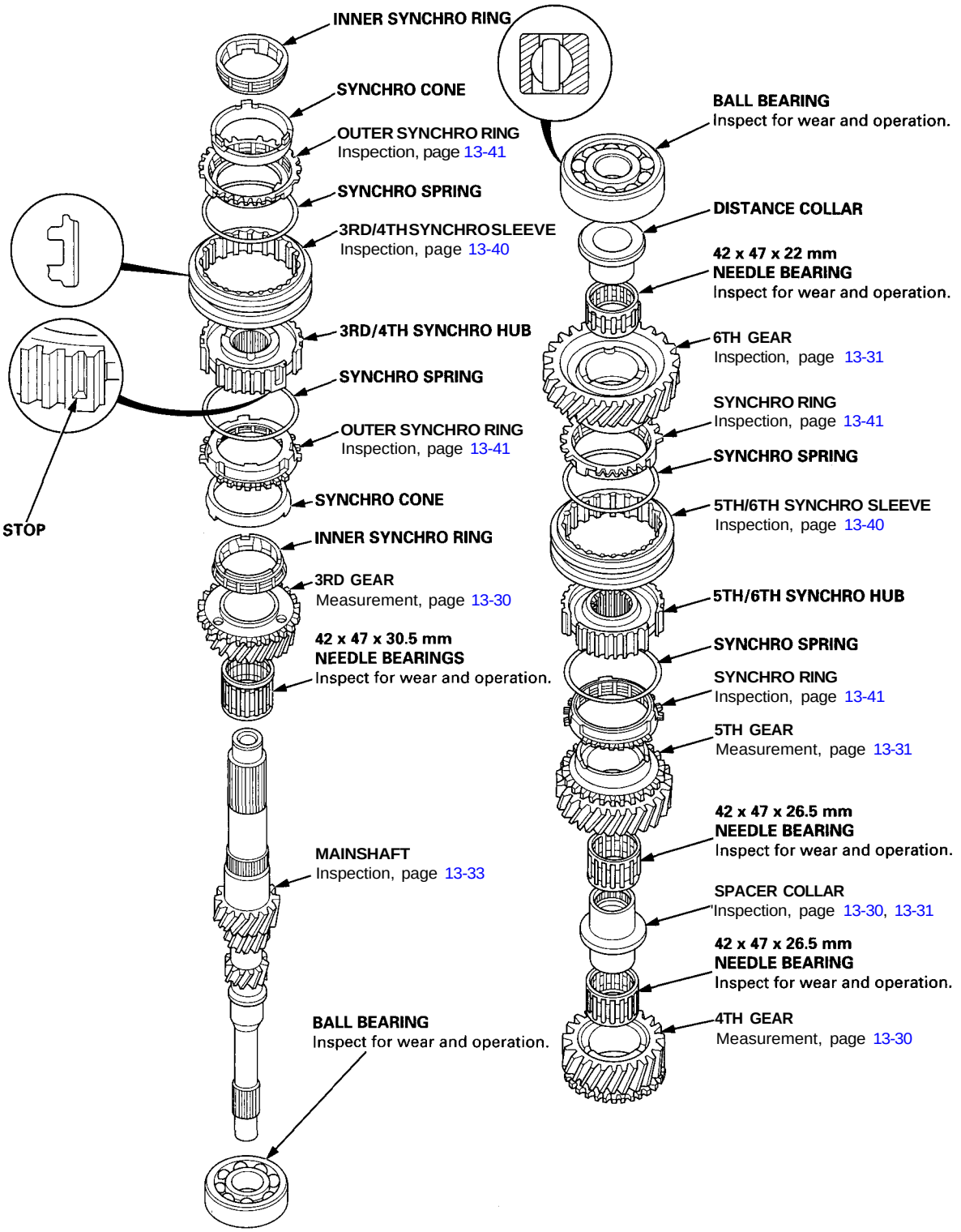

Mainshaft Assembly

Clearance Inspection

1. Measure the clearance between 2nd and 3rd gears.

Standard: 0.06 - 0.19 mm (0.002 - 0.007 in)
Service Limit: 0.3 mm (0.012 in)

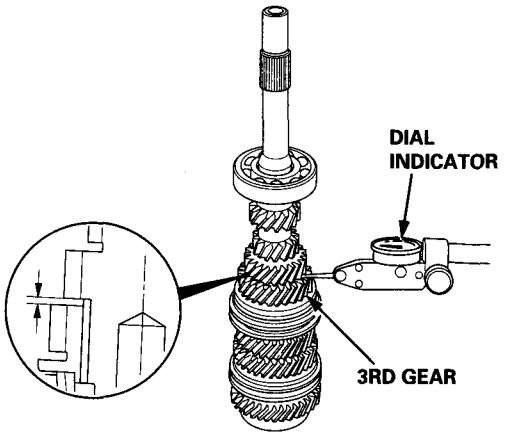

2. If the clearance exceeds the service limit, measure the thickness of 3rd gear.

Standard: 30.39 – 30.47 mm (1.196 – 1.200 in)
Service Limit: 30.30 mm (1.193 in)

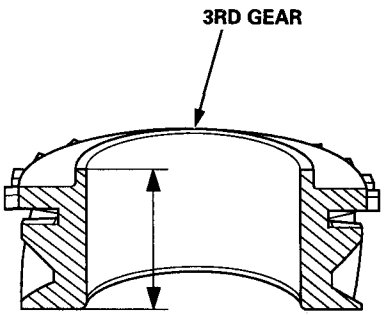

If the thickness of 3rd gear is less than the service limit, replace 3rd gear with a new one.
If the thickness of 3rd gear is within the service limit, replace the 3rd/4th synchro hub with a new one.

3. Measure the clearance between 4th gear and the spacer collar.

Standard: 0.06 - 0.19 mm (0.002 - 0.007 in)
Service Limit: 0.3 mm (0.012 in)

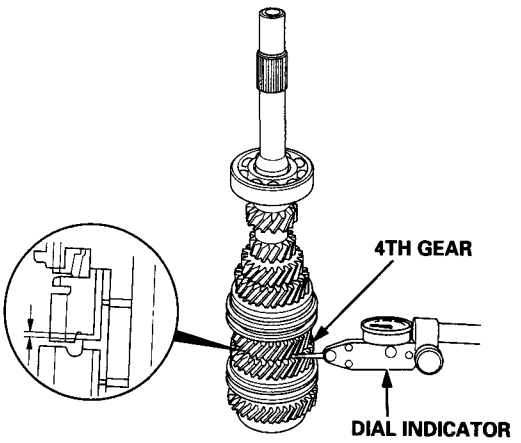

4. If the clearance exceeds the service limit, measure distance Ⓐ on the spacer collar.

Standard: 26.53 – 26.58 mm (1.044 – 1.046 in)
Service Limit: 26.51 mm (1.044 in)

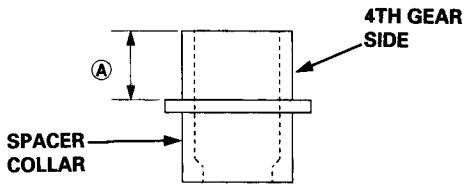

5. If distance Ⓐ is less than the service limit, replace the spacer collar with a new one.
If distance Ⓐ is within the service limit, measure the thickness of 4th gear.

Standard: 26.39 – 26.47 mm (1.039 – 1.042 in)
Service Limit: 26.30 mm (1.035 in)

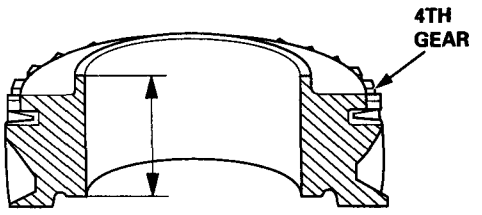

If the thickness of 4th gear is less than the service limit, replace 4th gear with a new one.
If the thickness of 4th gear is within the service limit, replace the 3rd/4th synchro hub with a new one.

6. Measure the clearance between the spacer collar and 5th gear.

Standard: 0.06 – 0.24 mm (0.002 – 0.009 in)
Service Limit: 0.3 mm (0.012 in)

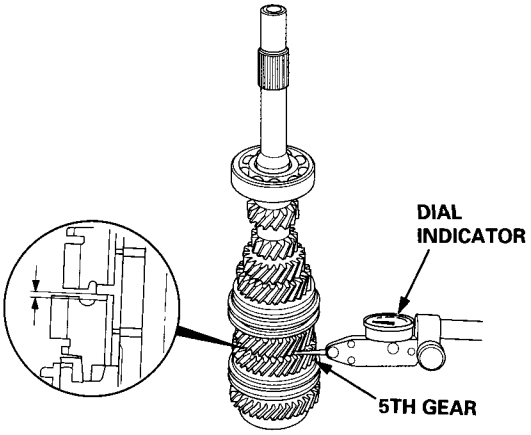

7. If the clearance exceeds the service limit, measure distance Ⓑ on the spacer collar.

Standard: 26.53 – 26.58 mm (1.044 – 1.046 in)
Service Limit: 26.51 mm (1.044 in)

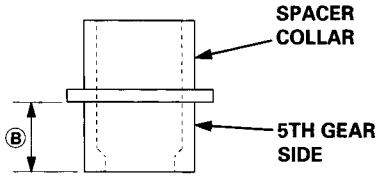

8. If distance Ⓑ is less than the service limit, replace the spacer collar with a new one.
If distance Ⓑ is within the service limit, measure thickness of 5th gear.

Standard: 32.89 – 32.97 mm (1.295 – 1.298 in)
Service Limit: 32.80 mm (1.291 in)

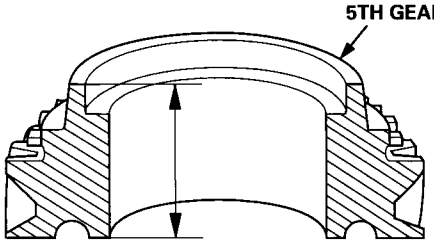

If the thickness of 5th gear is less than the service limit, replace 5th gear with a new one.
If the thickness of 5th gear is within the service limit, replace the 5th/6th synchro hub with a new one.

9. Measure the clearance between the distance collar and 6th gear.

Standard: 0.06 – 0.24 mm (0.002 – 0.009 in)
Service Limit: 0.3 mm (0.012 in)

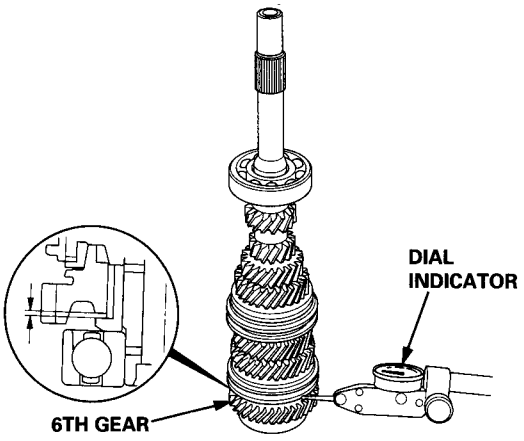

10. If the clearance exceeds the service limit, measure distance Ⓒ on the distance collar.

Standard: 22.03 – 22.08 mm (0.867 – 0.869 in)
Service Limit: 22.01 mm (0.867 in)

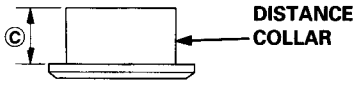

11. If distance Ⓒ is less than the service limit, replace the distance collar with a new one.
If distance Ⓒ is within the service limit, measure thickness of 5th gear.

Standard: 28.39 – 28.47 mm (1.118 – 1.121 in)
Service Limit: 28.30 mm (1.114 in)

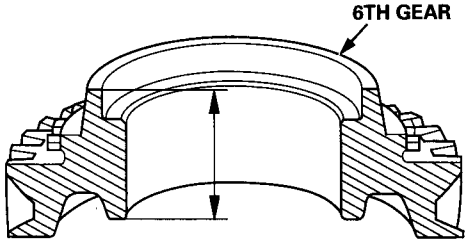

If the thickness of 6th gear is less than the service limit, replace 6th gear with a new one.
If the thickness of 6th gear is within the service limit, replace the 5th/6th synchro hub with a new one.

Mainshaft Assembly

Disassembly

1. Support ball bearing on steel blocks as shown, and press the shaft out of the ball bearing. Use of a jaw-type puller can damage the gear teeth.

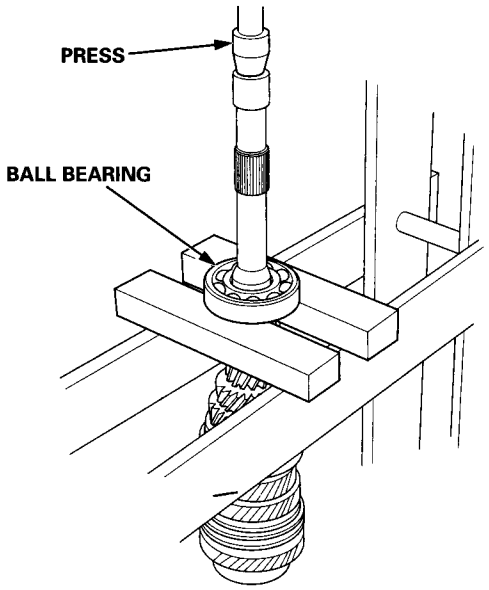

2. Support 6th gear on steel blocks as shown, and press the shaft out of the ball bearing.

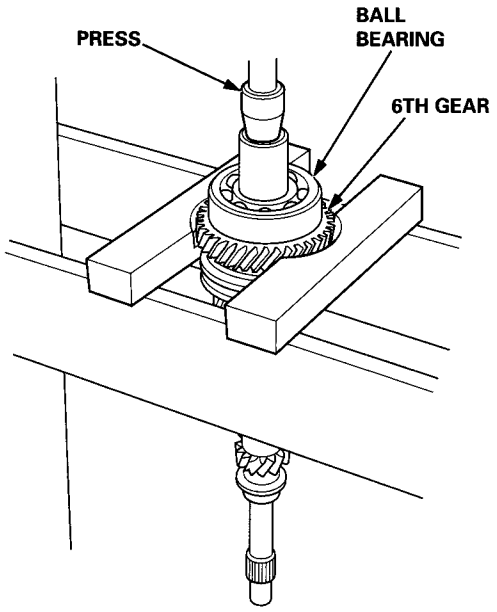

3. Support 5th gear on steel blocks as shown, and press the shaft out of the 5th/6th synchro hub.

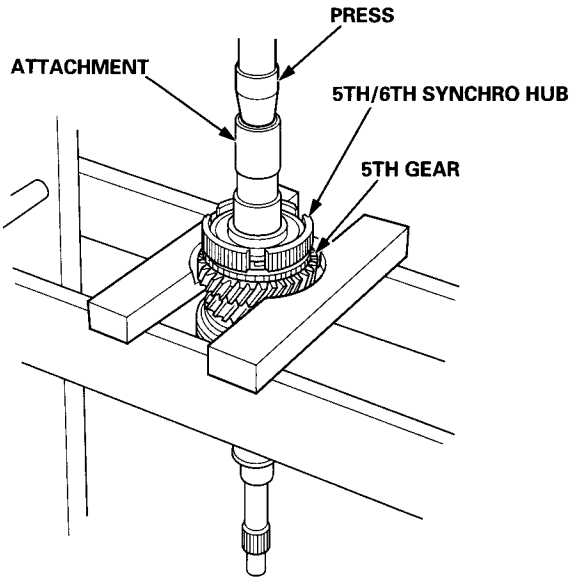

4. In the same manner as above, support the 3rd gear on steel blocks, and press the shaft out of the 3rd/4th synchro hub.

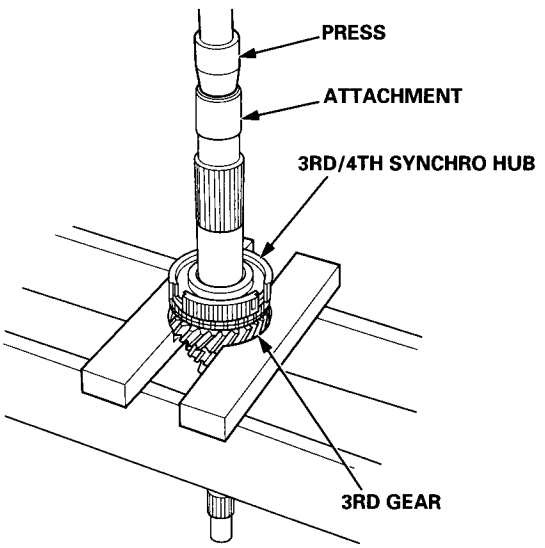

Inspection

1. Inspect the gear surface and bearing surface for wear and damage, then measure the mainshaft at points A, B, and C.

Standard:
A (Ball bearing surface): 32.002 – 32.018 mm (1.2599 – 1.2605 in)
B (Needle bearing surface): 41.984 – 42.000 mm (1.6529 – 1.6535 in)
C (Ball bearing surface): 30.984 – 31.000 mm (1.2198 – 1.2205 in)

Service limit:
A: 31.950 mm (1.2579 in)
B: 41.930 mm (1.6508 in)
C: 30.930 mm (1.2177 in)

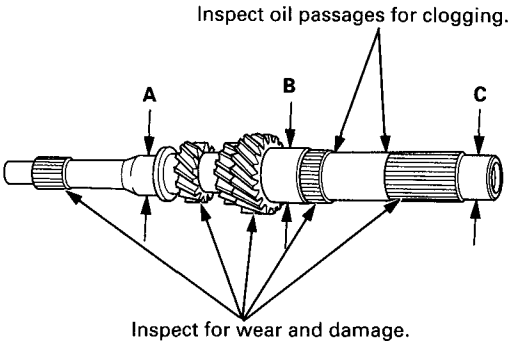

If any part of the mainshaft is less than the service limit, replace the mainshaft with a new one.

2. Support the mainshaft at both ends, and inspect for runout.

Standard: 0.02 mm (0.001 in) max.
Service Limit: 0.05 mm (0.002 in)

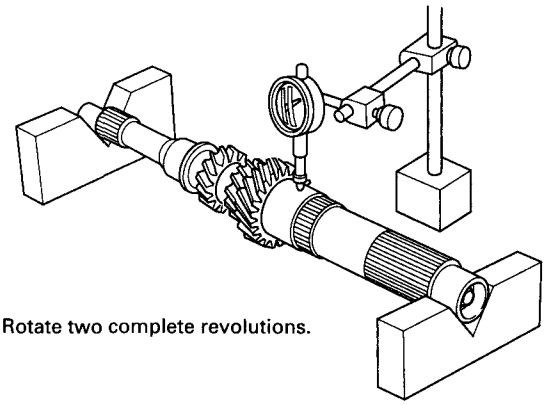

If the runout exceeds the service limit, replace the mainshaft with a new one.

Mainshaft Assembly

Reassembly

CAUTION:

- **Prior to reassembling, clean all the parts in solvent, dry them, and apply lubricant to any contact parts.**
- **Press the 3rd/4th and 5th/6th synchro hubs on the mainshaft without lubrication.**
- **When installing the 3rd/4th and 5th/6th synchro hubs, support the shaft on steel blocks, and install the synchro hubs using a press.**
- **Install the 3rd/4th and 5th/6th synchro hubs with a maximum pressure of 1,000 kg (2,205 lbs), then press both the 3rd/4th and 5th/6th synchro hubs with a pressure of 2,000 kg (4,409 lbs).**
- **The clutch housing ball bearing is installed when it's time to check the mainshaft clearances.**

NOTE: To reassemble, see page 13-31.

1. Support 2nd gear on steel blocks, then install the 3rd/4th synchro hub using a press.

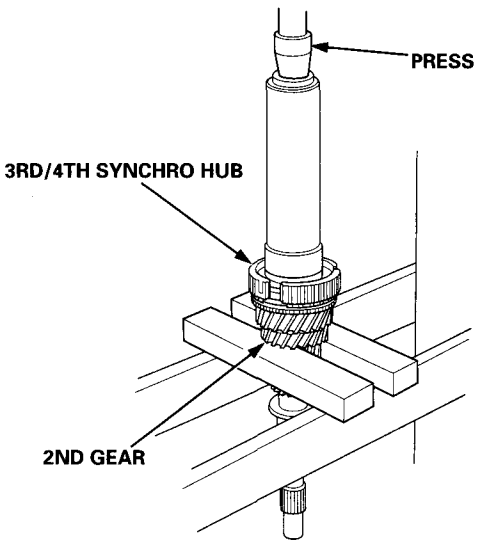

2. Install the 3rd/4th synchro sleeve by aligning the stops on the 3rd/4th synchro sleeve and hub. After installing, check the operation of the 3rd/4th synchro hub set.

3. Install the 5th/6th synchro hub using a press.

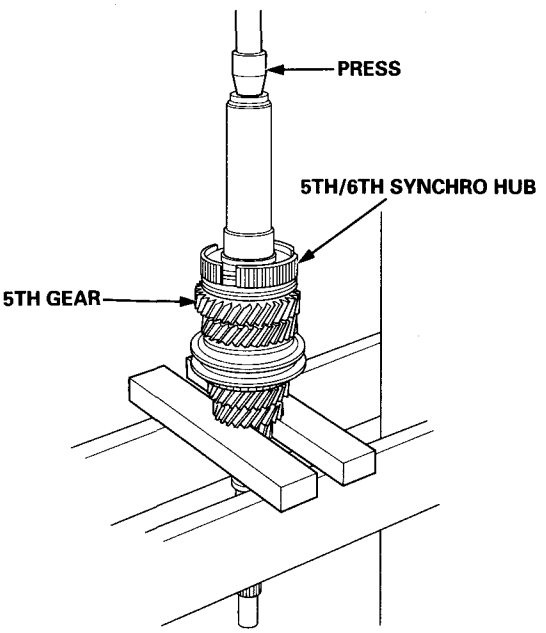

4. Install the transmission housing side ball bearing with the tapered end facing down using a press.

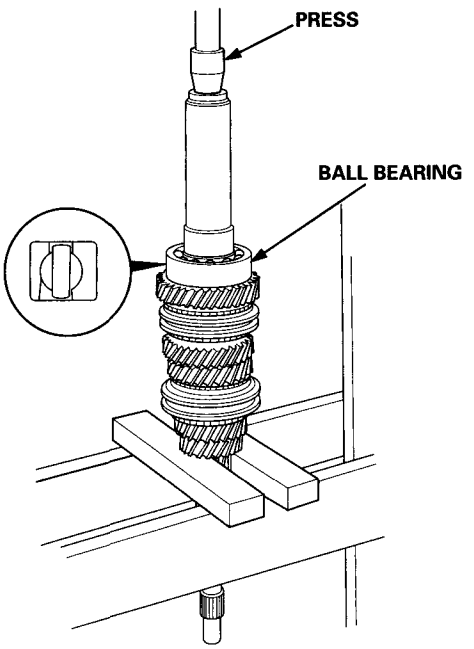

Countershaft Assembly

Index

NOTE: The 3rd, 4th, 5th and 6th gears are installed with a press.

OIL Prior to reassembling, clean all the parts in solvent, dry them, and apply lubricant to any contact surfaces. The 3rd, 4th, 5th and 6th gears should be installed without lubrication using a press.

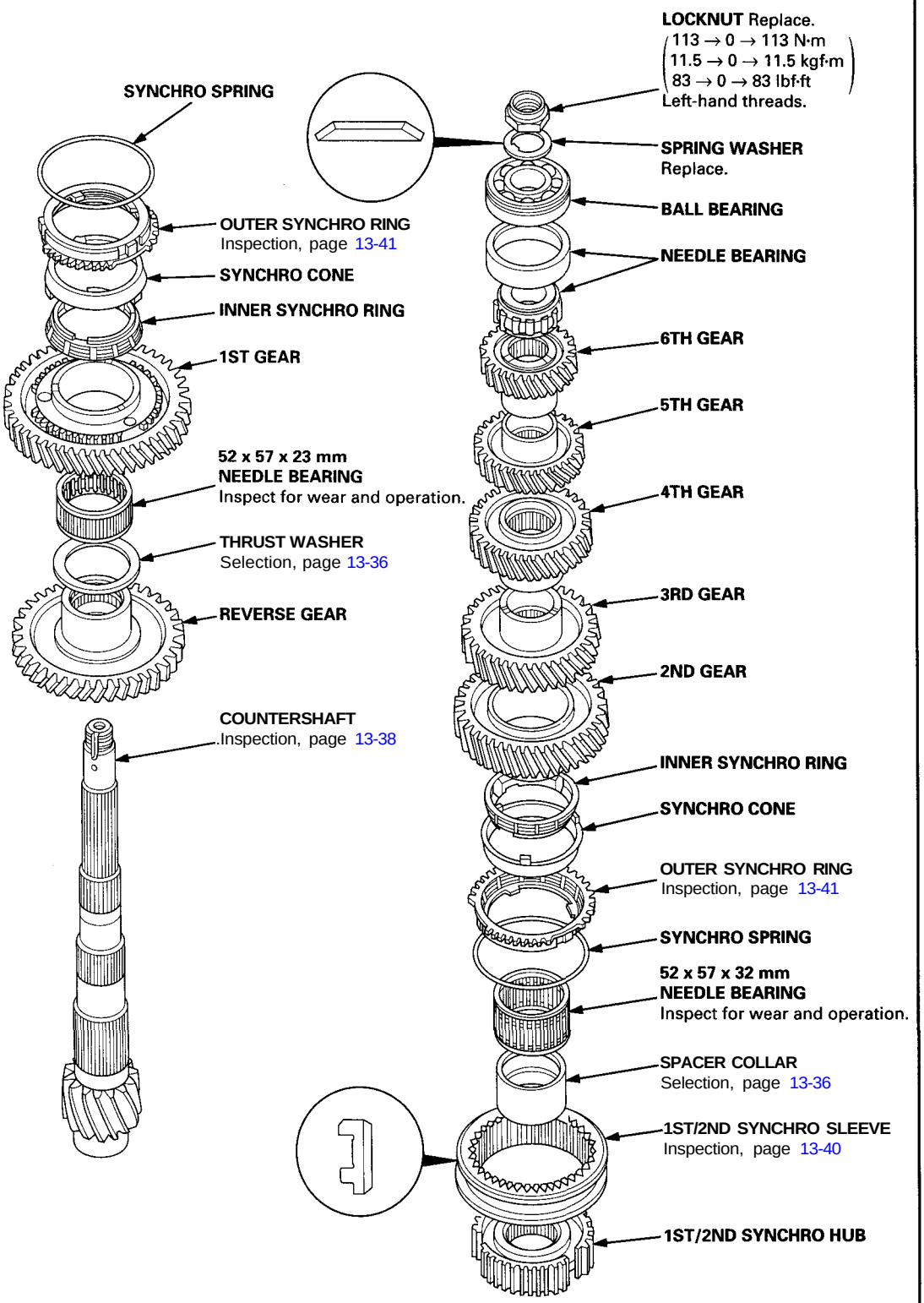

Countershaft Assembly

Clearance Inspection

1. Measure the clearance between 2nd and 3rd gear.

   Standard: 0.04 – 0.10 mm (0.002 – 0.004 in)

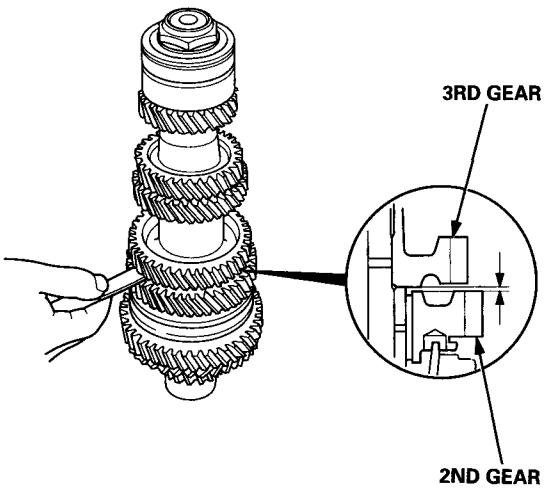

2. If the clearance exceeds the standard, select the appropriate spacer collar for the correct clearance from the chart below.

SPACER COLLAR

	Part Number	Thickness
A	23912 – PR8 – F00	32.07 – 32.09 mm (1.2626 – 1.2634 in)
B	23913 – PR8 – F00	32.03 – 32.05 mm (1.2610 – 1.2618 in)

3. Measure the clearance between 1st and reverse gear.

   Standard: 0.04 - 0.10 mm (0.002 - 0.004 in)

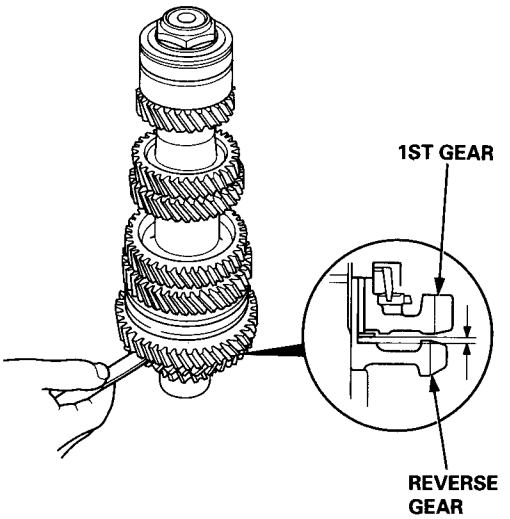

4. If the clearance exceeds the standard, select the appropriate thrust washer for the correct clearance from the chart below.

THRUST WASHER

	Part Number	Thickness
A	23921 – PR8 – F00	1.43 mm (0.0563 in)
B	23922 – PR8 – F00	1.46 mm (0.0575 in)
C	23923 – PR8 – F00	1.49 mm (0.0587 in)
D	23924 – PR8 – F00	1.52 mm (0.0598 in)
E	23925 – PR8 – F00	1.55 mm (0.0610 in)

Disassembly

NOTE: Remove the gears using a press and steel blocks. Use of a jaw-type puller can damage the gear teeth.

1. Securely clamp the countershaft assembly in a bench vise with wood blocks.

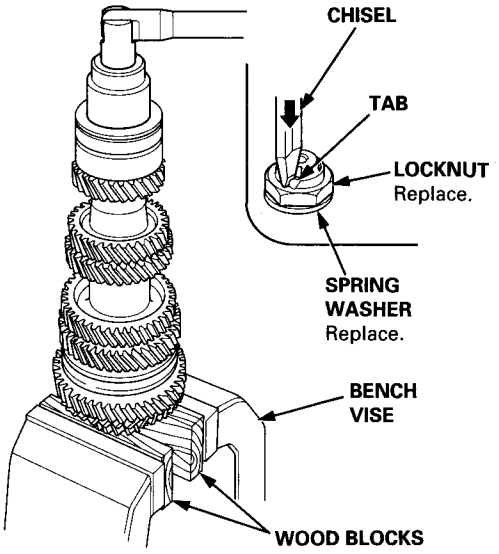

2. Raise the locknut tab from the groove of the countershaft, and remove the locknut and the spring washer.

   NOTE: The locknut has left-hand threads.

3. Support 6th gear on steel blocks, and press the shaft out of ball bearing, needle bearing, and 6th gear.

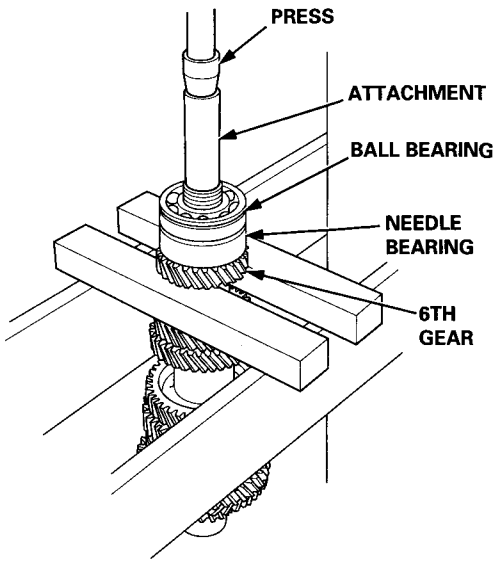

4. Support 4th gear on steel blocks, and press the shaft out of 5th and 4th gears.

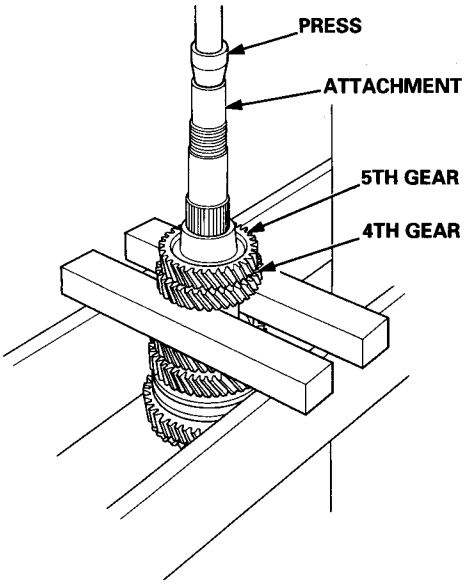

5. Support 2nd gear on steel blocks, and press the shaft out of 3rd and 2nd gears.

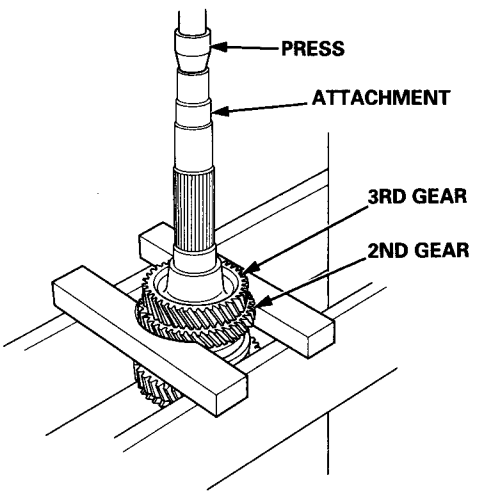

Countershaft Assembly

Inspection

1. Inspect the gear surfaces and bearing surfaces for wear and damage, then measure the countershaft at points A and B inspect oil passages for clogging.

Standard:
A (Needle bearing surface): 43.974 – 43.990 mm (1.7313 – 1.7319 in)
B (Ball bearing surface): 33.984 – 34.000 mm (1.3380 – 1.3386 in)
Service limit:
A: 43.920 mm (1.7291 in)
B: 33.930 mm (1.3358 in)

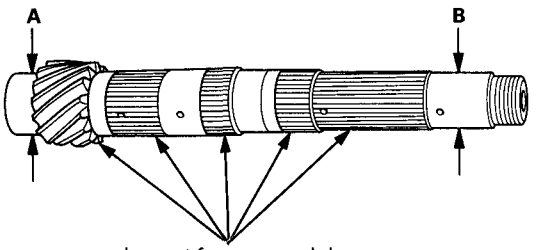

Inspect for wear and damage.

If any part of the countershaft is less than the service limit, replace it with a new one.

2. Support the countershaft at both ends, and inspect for runout.

Standard: 0.02 mm (0.001 in) max.
Service Limit: 0.05 mm (0.002 in)

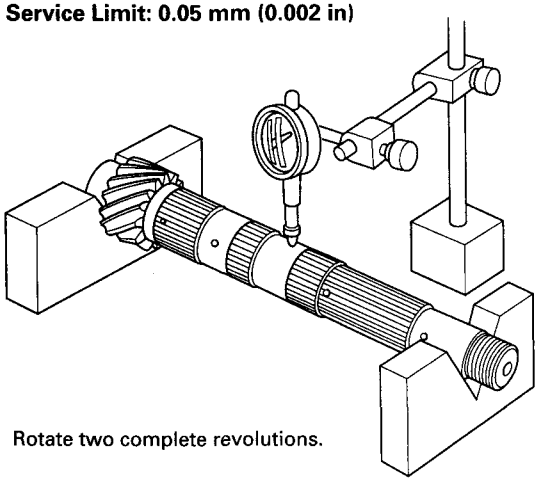
Rotate two complete revolutions.

If the runout exceeds the service limit, replace the countershaft with a new one.

Countershaft Assembly

Reassembly

CAUTION:

- **Prior to reassembling, clean all the parts in solvent, dry them, and apply lubricant to any contact parts.**
- **Press the 3rd, 4th, 5th and 6th gears on the countershaft without lubrication.**
- **When installing the 3rd, 4th, 5th and 6th gears, support the shaft on steel blocks, and install the gears using a press.**
- **Install the 3rd, 4th, 5th and 6th gears with a maximum pressure of 1,000 kg (2,205 lbs), then press all three gears with a pressure of 2,600 kg (5,732 lbs).**

NOTE: To reassemble, see page 13-37.

1. Support the countershaft on a steel block, and install 3rd gear using a press.

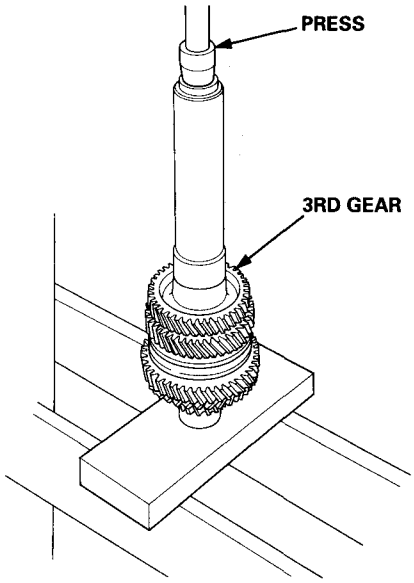

2. Install 4th gear using a press.

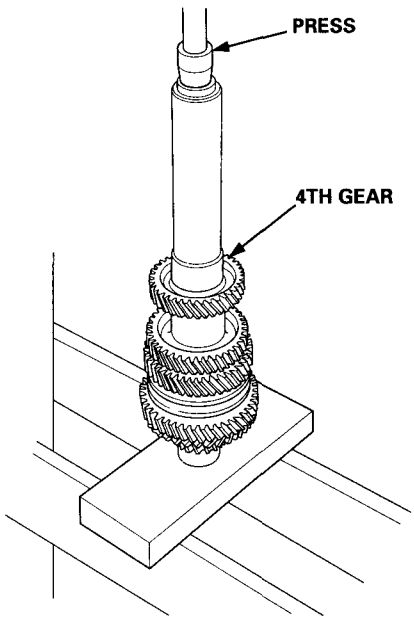

3. Install 5th gear using a press.

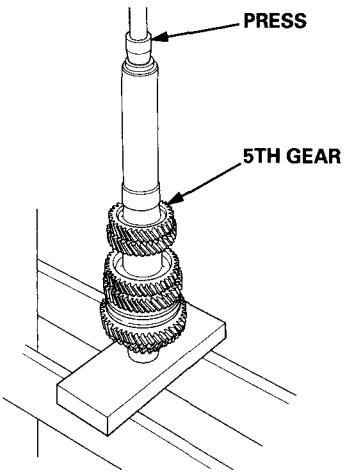

4. Install 6th gear using a press.

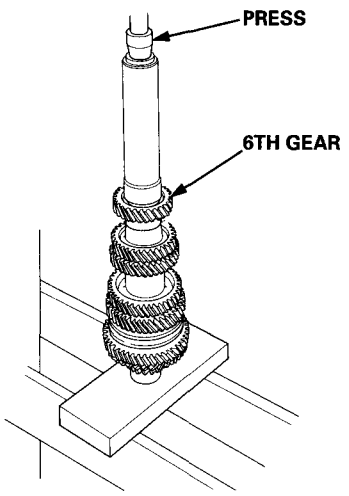

5. Install the needle bearing using a press then install the bearing outer race.

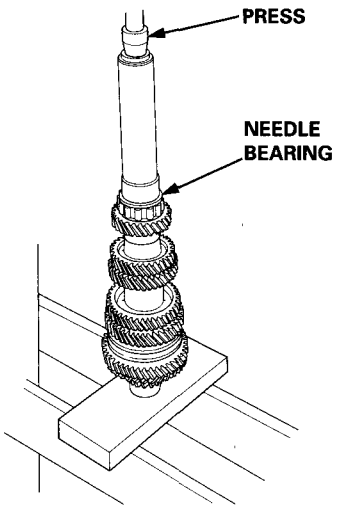

6. Install the ball bearing using a press.

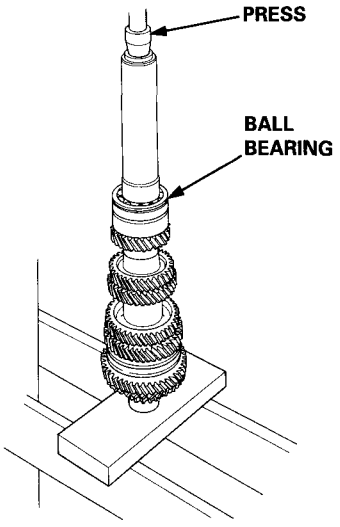

7. Securely clamp the countershaft assembly in a bench vise with wood blocks.

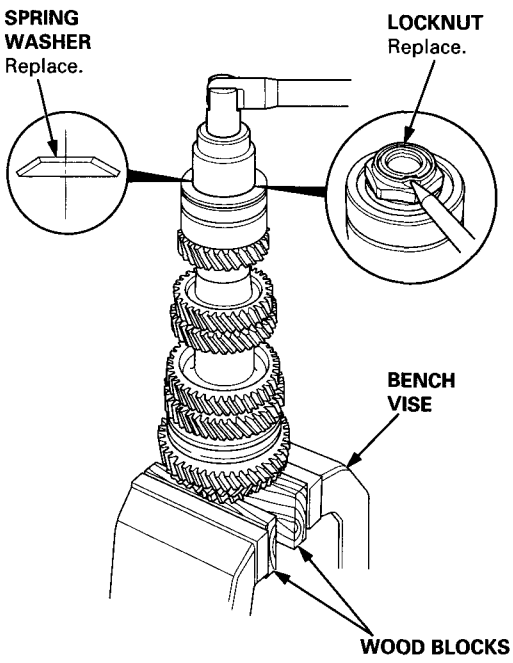

8. Install the spring washer, tighten the locknut, then stake the locknut tab into the groove.

NOTE: The locknut has left-hand threads.

LOCKNUT
113 → 0 → 113 N·m
(11.5 → 0 → 11.5 kgf·m, 83 → 0 → 83 lbf·ft)

Synchro Sleeve, Synchro Hub

Inspection

1. Inspect gear teeth on all synchro hubs and synchro sleeves for rounded off corners, which indicates wear.

2. Install each synchro hub in its mating synchro sleeve, and check for freedom of movement.
   If replacement is required, always replace the synchro sleeve and synchro hub as a set.

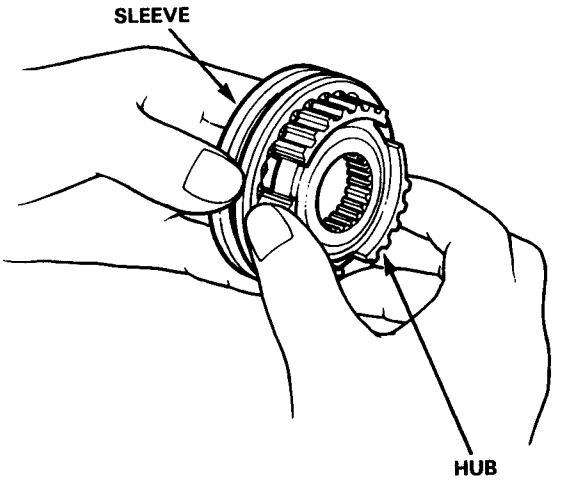

Installation

Each synchro sleeve has three sets of longer teeth (120 degrees apart) that must be matched with the three sets of deeper grooves in the synchro hub when assembled.
Installing the synchro sleeve with its longer teeth in the synchro hub slots will damage the spring ring.

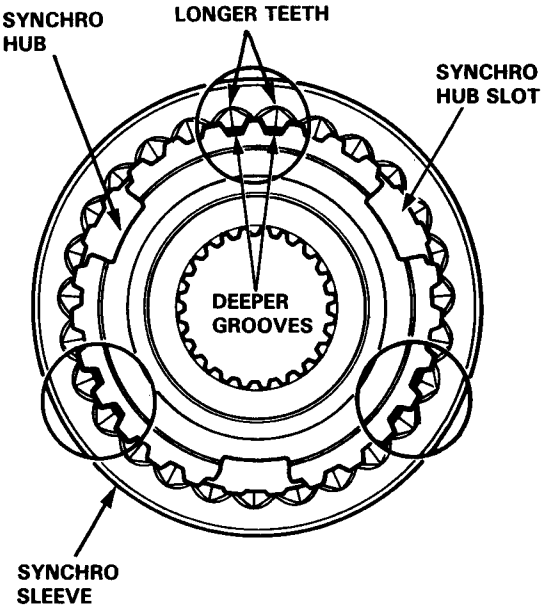

Synchro Ring, Gear

Inspection

1. Inspection the synchro ring and gear.

   A : Inspect the inside of the synchro ring for wear.

   B : Inspect the synchro sleeve teeth and matching teeth on the synchro ring for wear (rounded off).

   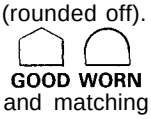

   C : Inspect the synchro sleeve teeth and matching teeth on the gear for wear (rounded off).

   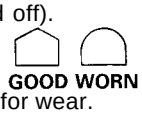

   D : Inspect the gear hub thrust surface for wear.

   E : Inspect the cone surface for wear and roughness.

   F : Inspect the teeth on all gears for uneven wear, scoring, gaining, and cracks.

2. Coat the cone surface of the gear with oil, and place the synchro ring on the matching gear. Rotate the synchro ring, making sure that it does not slip.

   Measure the clearance between the synchro ring and gear all the way around. Hold the synchro ring against the gear evenly while measuring the clearance.

   Synchro Ring-to-Gear Clearance
   Standard: 0.85 – 1.1 mm (0.033 – 0.043 in)
   Service Limit: 0.4 mm (0.016 in)

   Double Cone Synchro-to-Gear Clearance
   Standard:
   Ⓐ: (Outer Synchro Ring to Synchro Cone)
   0.5 – 1.0 mm (0.020 – 0.039 in)
   Ⓑ: (Synchro Cone to Gear)
   0.5 – 1.0 mm (0.020 – 0.039 in)
   Ⓒ: (Outer Synchro Ring to Gear)
   0.95 – 1.68 mm (0.037 – 0.066 in)

   Service Limit:
   Ⓐ: 0.3 mm (0.012 in)
   Ⓑ: 0.3 mm (0.012 in)
   Ⓒ: 0.6 mm (0.024 in)

   If the clearance is less than the service limit, replace the synchro ring and synchro cone.

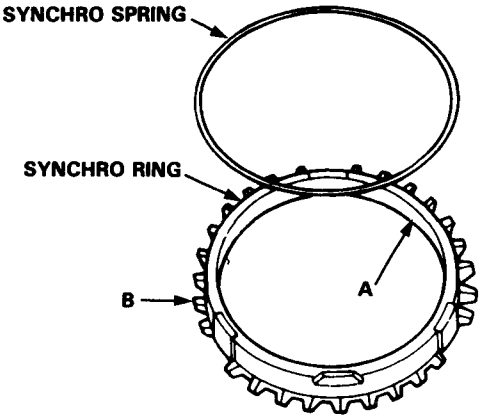

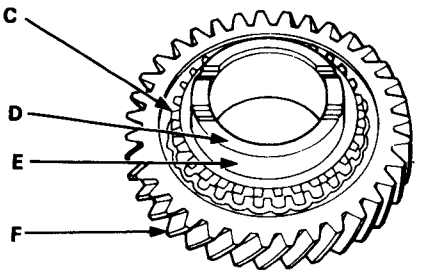

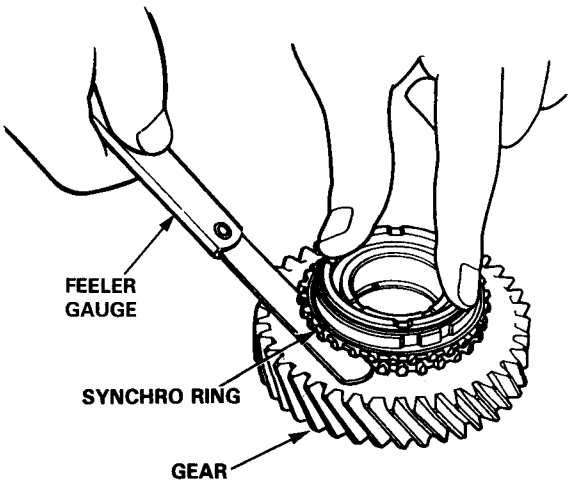

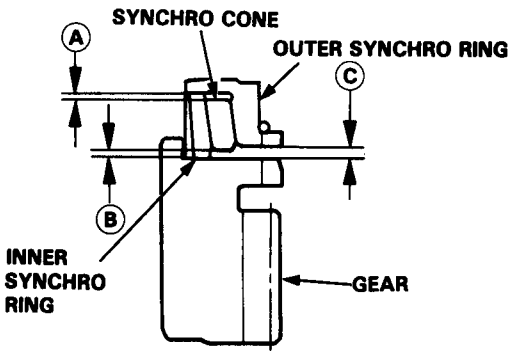

Oil Pump

Disassembly/Reassembly

OIL Prior to reassembling, clean all the parts in solvent, dry them, and apply lubricant to any contact surfaces.

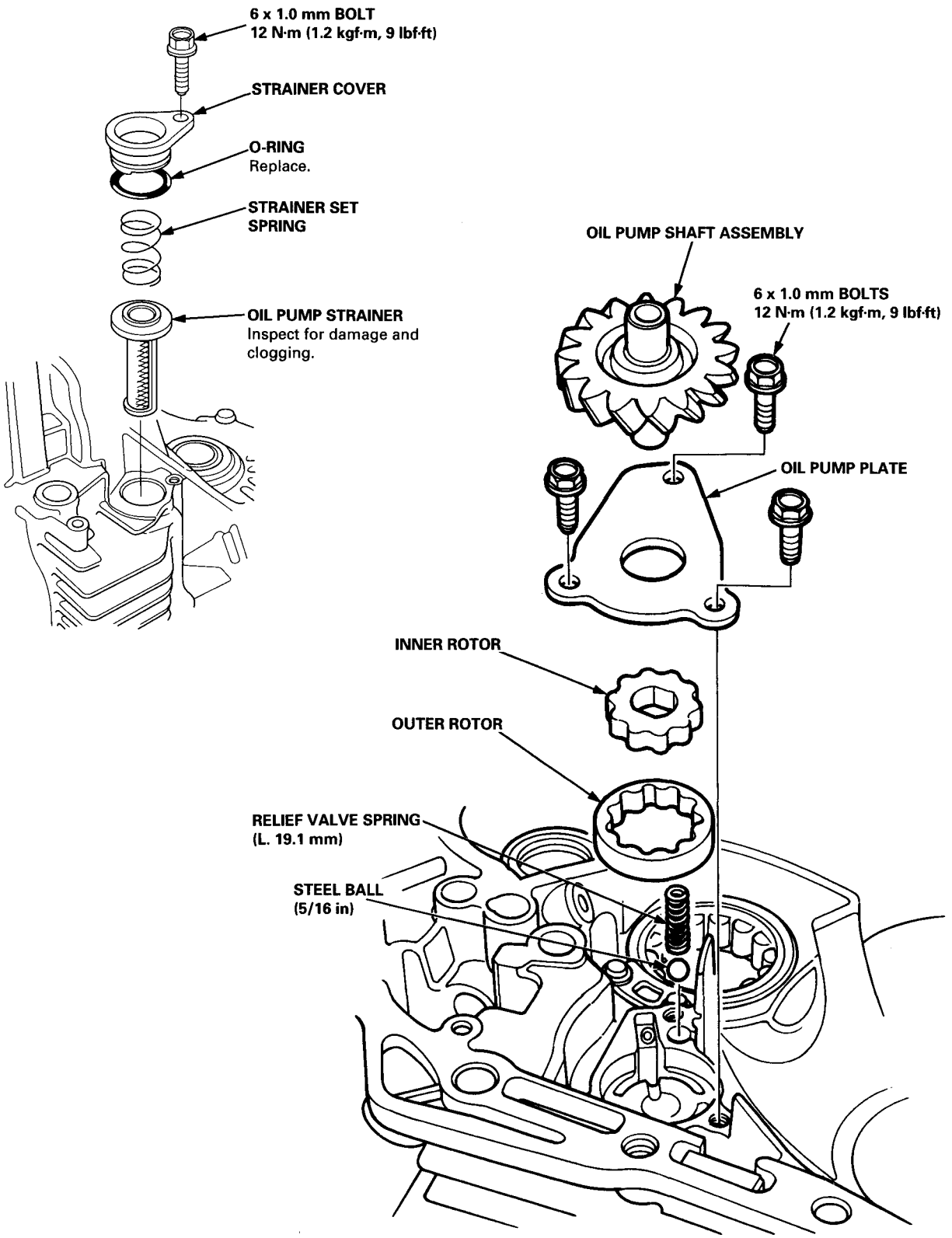

Clearance Inspection

1. Check the clearance between the transmission mating surface of the clutch housing and the oil pump gear.

Standard: 0.3 - 0.8 mm (0.012 - 0.031 in)
Service Limit: 0.9 mm (0.035 in)

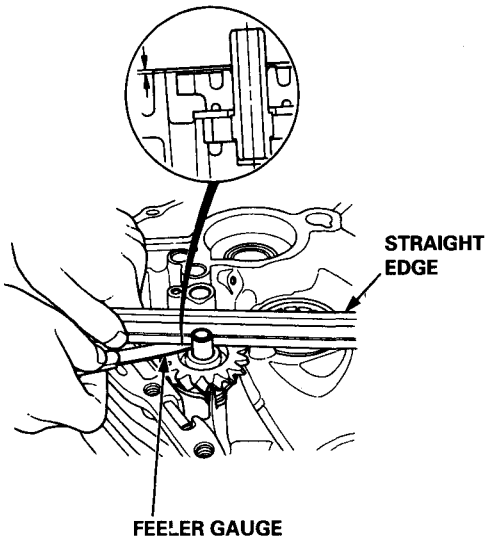

2. Check the axial clearance on the pump rotor.

Clutch Housing-to-Rotor Axial clearance
Standard: 0.03-0.1 mm (0.001 - 0.004 in)
Service Limit: 0.15 mm (0.006 in)

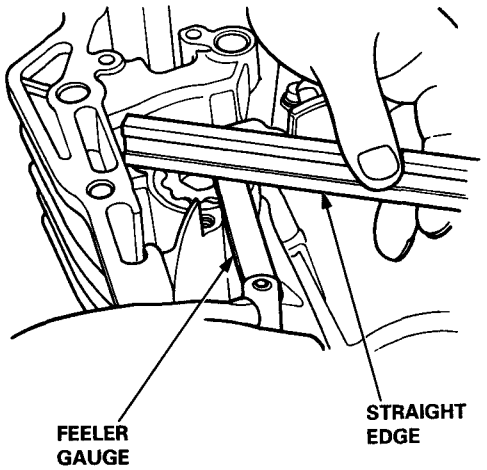

3. Check the radial clearance on the pump rotor.

Inner Rotor-to-Outer Rotor Radial clearance
Standard: 0.14 mm (0.006 in) max.
Service Limit: 0.2 mm (0.008 in)

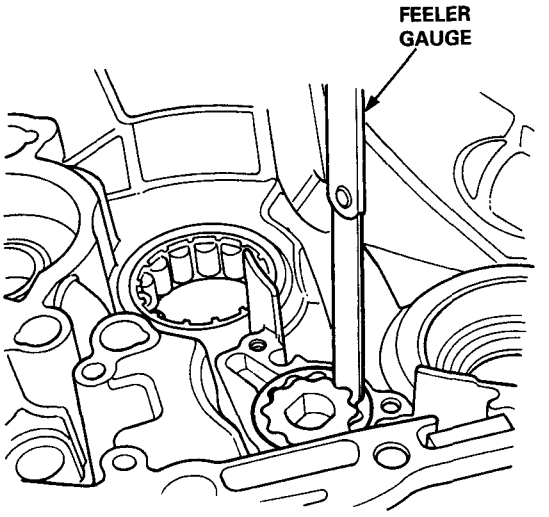

4. Check the radial clearance between the clutch housing and the outer rotor.

Clutch Housing-to-Rotor Radial clearance
Standard: 0.1 - 0.2 mm (0.004-0.008 in)
Service Limit: 0.22 mm (0.009 in)

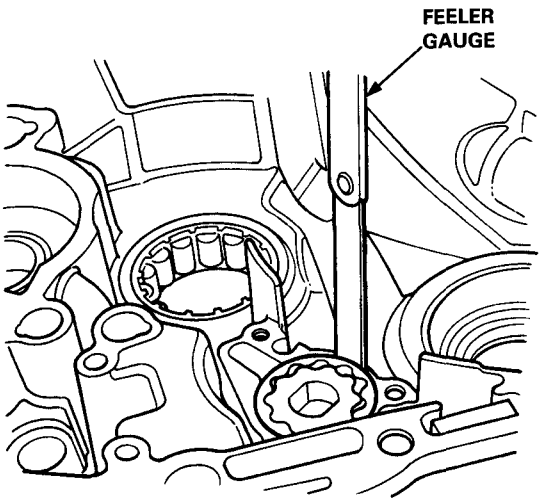

Mainshaft Oil Seal (Clutch Housing)

Replacement

1. Remove the release bearing guide cover, and release bearing guide.

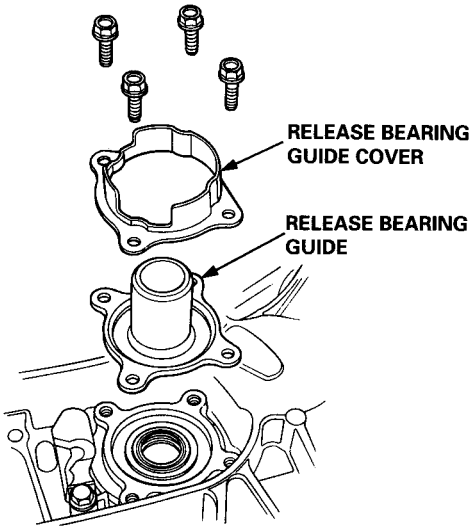

2. Remove the oil seal.

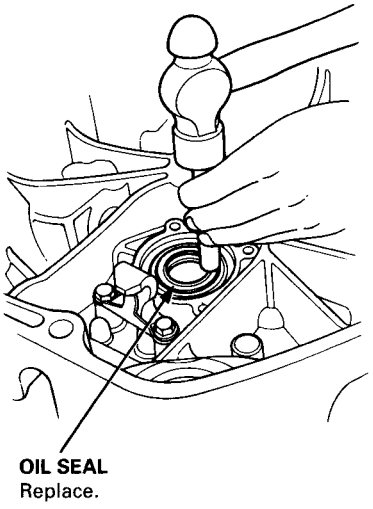

3. Drive a new oil seal from the clutch side using the special tools as shown.

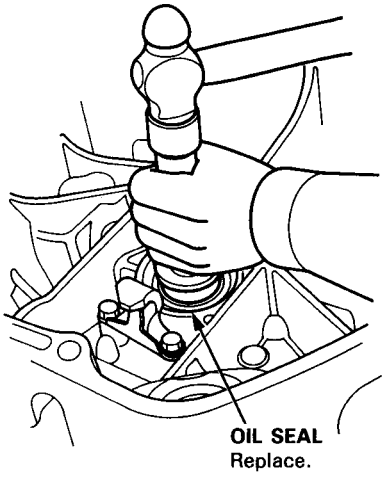

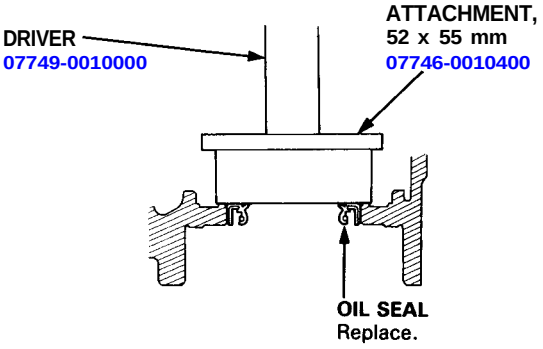

4. Install the release bearing guide, and release bearing guide cover.

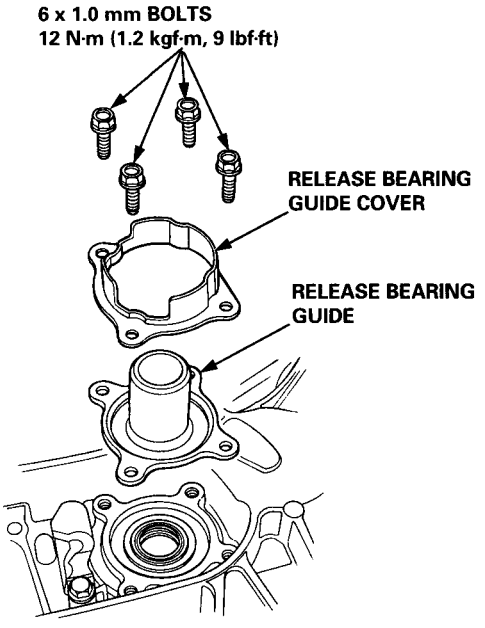

Countershaft Bearing (Clutch Housing)

Replacement

1. Remove the bearing retaining plate.

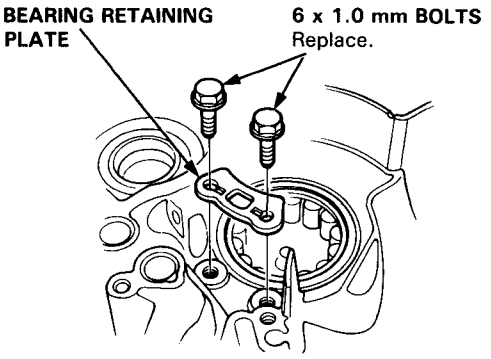

2. Remove the needle bearing with the special tool, then remove the oil guide plate.

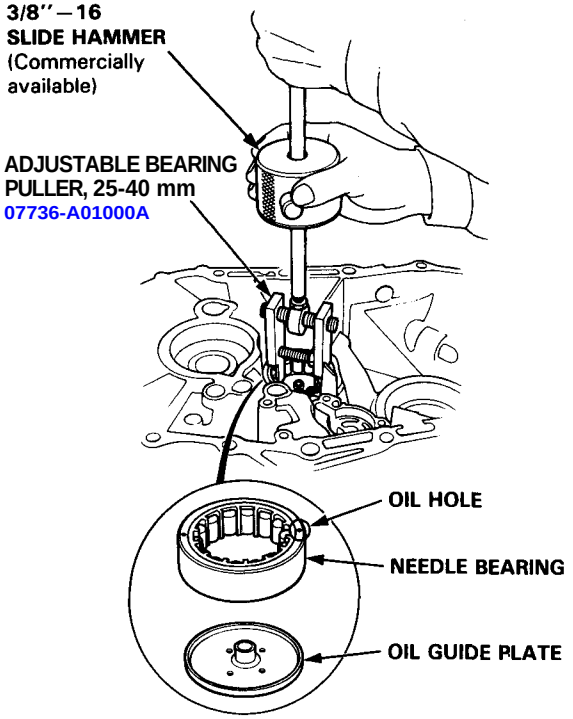

3. Position the oil guide plate and new needle bearing in the bore of the clutch housing. Position the needle bearing with the oil hole facing up.

4. Drive the needle bearing using the special tools.

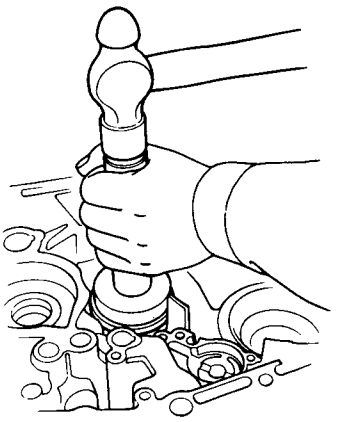

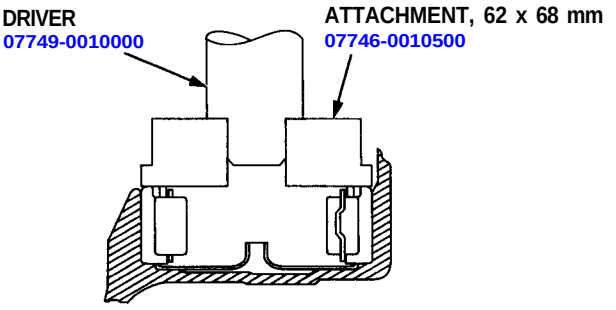

5. Install the bearing retaining plate, and stake the bolt heads in the groove in the bearing retaining plate.

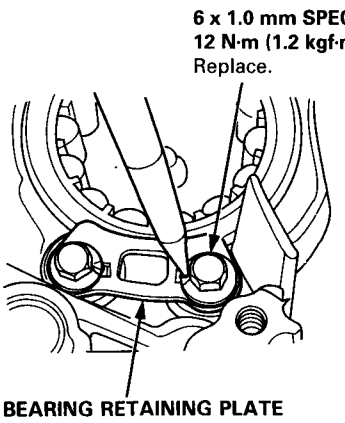

Mainshaft Thrust Shim

Adjustment

1. Remove the thrust shim and oil guide plate from the transmission housing.
2. Install the mainshaft in the transmission housing. Do not install the clutch housing side ball bearing.
3. Measure distance Ⓐ between the end of the transmission housing and mainshaft. Use a straight edge and feeler gauge, and measure at three locations and average the readings.

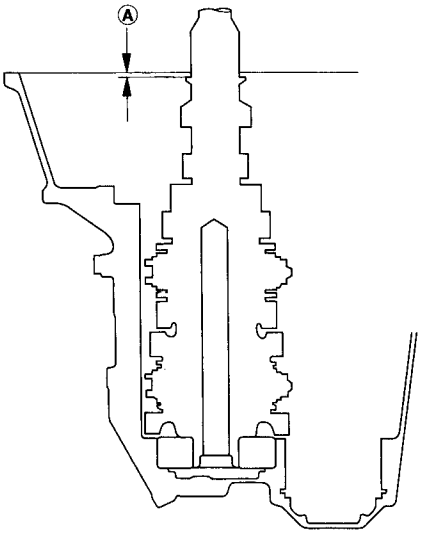

4. Set the mainshaft ball bearing in the clutch housing, and measure distance Ⓑ or Ⓒ between the surfaces of the clutch housing and the bearing inner race. Use a straight edge and feeler gauge, and measure at three locations and average the readings. Do not install the spring washer.

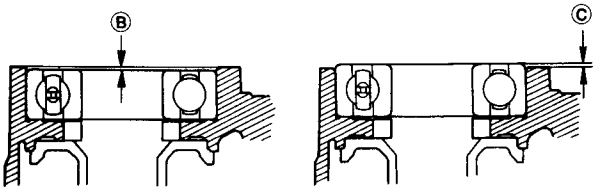

5. Select the proper thrust shim on the basis of the following calculations. Do not use more than two thrust shims.

(Basic Formula)
A + B – 0.99 mm = shim thickness (max.)
A + B – 1.06 mm = shim thickness (min.)
A – C – 0.99 mm = shim thickness (max.)
A – C – 1.06 mm = shim thickness (min.)

82 mm THRUST SHIM

	Part Number	Thickness
A	23931 – PR8 – F00	0.60 mm (0.0236 in)
B	23932 – PR8 – F00	0.63 mm (0.0248 in)
C	23933 – PR8 – F00	0.66 mm (0.0260 in)
D	23934 – PR8 – F00	0.69 mm (0.0272 in)
E	23935 – PR8 – F00	0.72 mm (0.0283 in)
F	23936 – PR8 – F00	0.75 mm (0.0295 in)
G	23937 – PR8 – F00	0.78 mm (0.0307 in)
H	23938 – PR8 – F00	0.81 mm (0.0319 in)
I	23939 – PR8 – F00	0.84 mm (0.0331 in)
J	23940 – PR8 – F00	0.87 mm (0.0343 in)
K	23941 – PR8 – F00	0.90 mm (0.0354 in)
L	23942 – PR8 – F00	0.93 mm (0.0366 in)
M	23943 – PR8 – F00	0.96 mm (0.0378 in)
N	23944 – PR8 – F00	0.99 mm (0.0390 in)
O	23945 – PR8 – F00	1.02 mm (0.0402 in)
P	23946 – PR8 – F00	1.05 mm (0.0413 in)
Q	23947 – PR8 – F00	1.08 mm (0.0425 in)
R	23948 – PR8 – F00	1.11 mm (0.0437 in)
S	23949 – PR8 – F00	1.14 mm (0.0449 in)
T	23950 – PR8 – F00	1.17 mm (0.0461 in)
U	23951 – PR8 – F00	1.20 mm (0.0472 in)

NOTE: Clean all the parts thoroughly before installation.

6. Install the oil guide plate and thrust shim into the transmission housing.

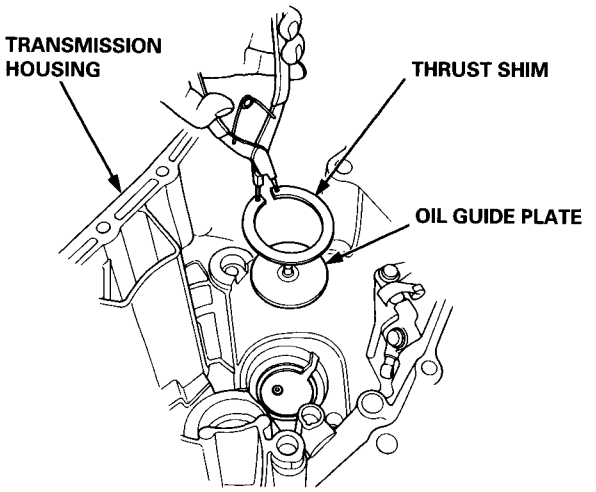

7. Install the ball bearing onto the mainshaft using the special tools.

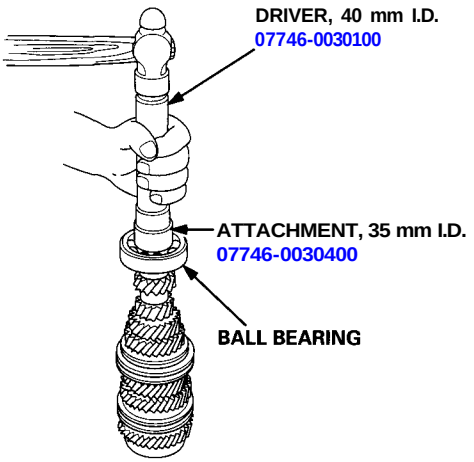

8. Install the 75 mm spring washer and mainshaft assembly into the clutch housing.

9. Install the transmission housing.

Torque: 44 N-m (4.5 kgf-m, 33 lbf-ft)

10. Check the thrust clearance in the manner described below. Carry out the measurement at normal room temperature.

a. Slide the mainshaft base over the mainshaft,
b. Attach the mainshaft holder to the mainshaft as follows:

- Back-out the mainshaft holder bolt and loosen the two hex bolts.
- Fit the holder over the mainshaft so its lip is towards the transmission.
- Align the mainshaft holder's lip around the groove at the inside of the mainshaft splines, then tighten the hex bolts.

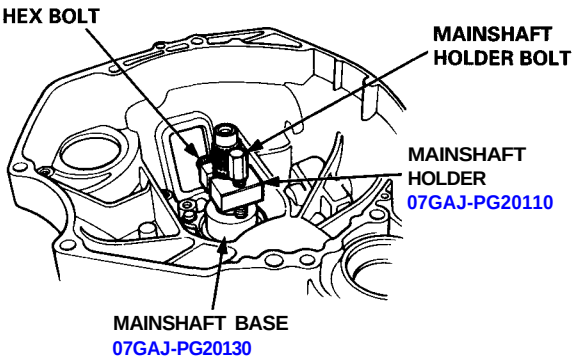

c. Seat the mainshaft full by tapping its end with a plastic hammer,
d. Thread the mainshaft holder bolt in until it just contacts the wide surface of the mainshaft base.
e. Zero a dial gauge on the end of the mainshaft.

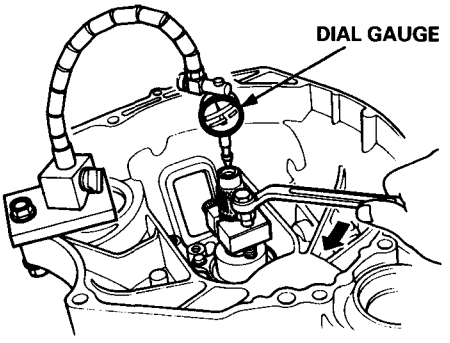

f. Turn the mainshaft holder bolt clockwise; stop turning when the dial gauge has reached its maximum movement. The reading on the dial gauge is the amount of mainshaft end play.

CAUTION: Turning the shaft holder bolt more then 60 degrees after the needle of the dial gauge stops moving may damage the transmission.

g. If the reading is within the standard, the clearance is correct.
If the reading is not within the standard, recheck the shim thickness.

Standard: 0.14 - 0.21 mm (0.006 - 0.008 in)

Reassembly

1. Install the oil seal, shift arm, and shift lever in the transmission housing.

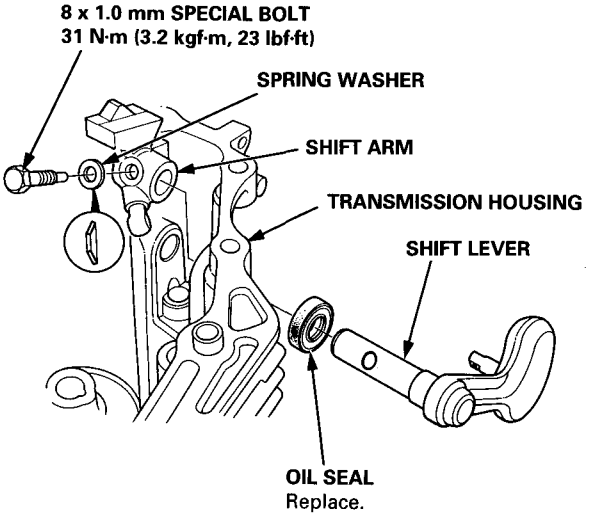

2. Install the shift detent spring and spring set plate.

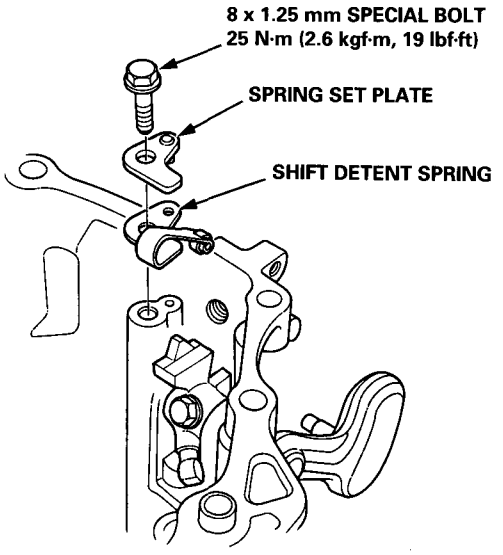

3. Install the oil seal, select arm, and select lever in the clutch housing.

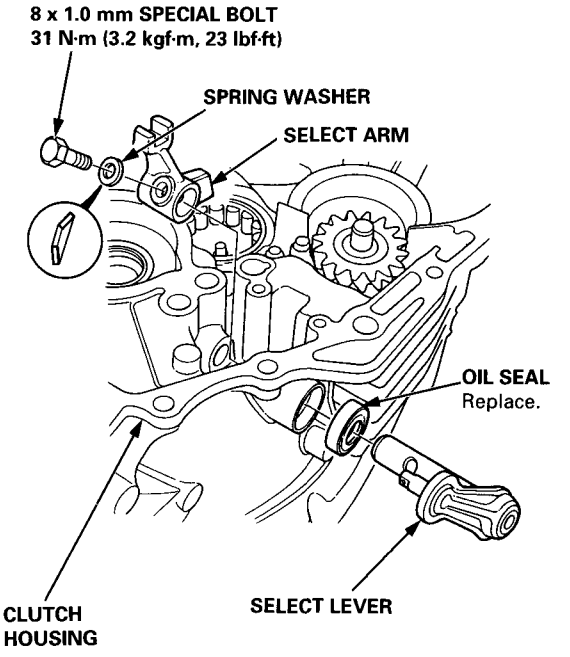

4. Install the differential assembly into the clutch housing.

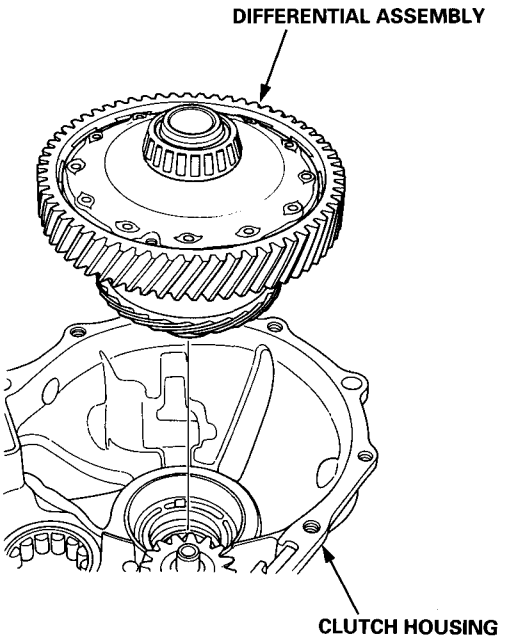

5. Install the spring washer, then insert the mainshaft and countershaft into the shift forks and install them as an assembly. Tape the mainshaft splines before installation.

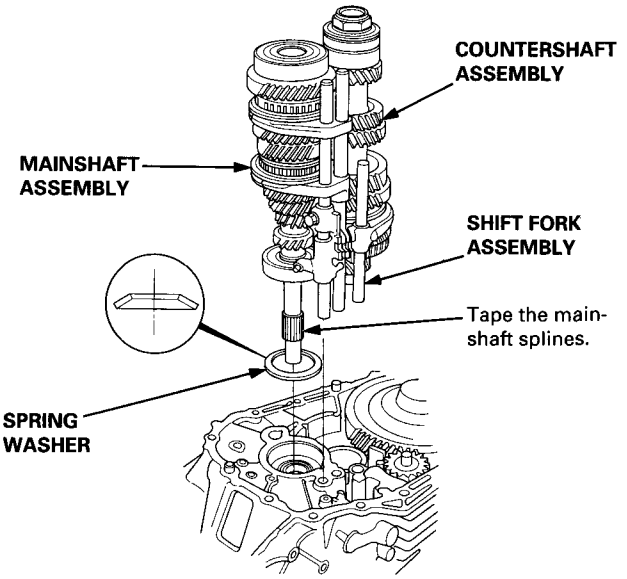

6. Install the change holder assembly in the clutch housing. Place the interlock finger in the groove of the select arm.

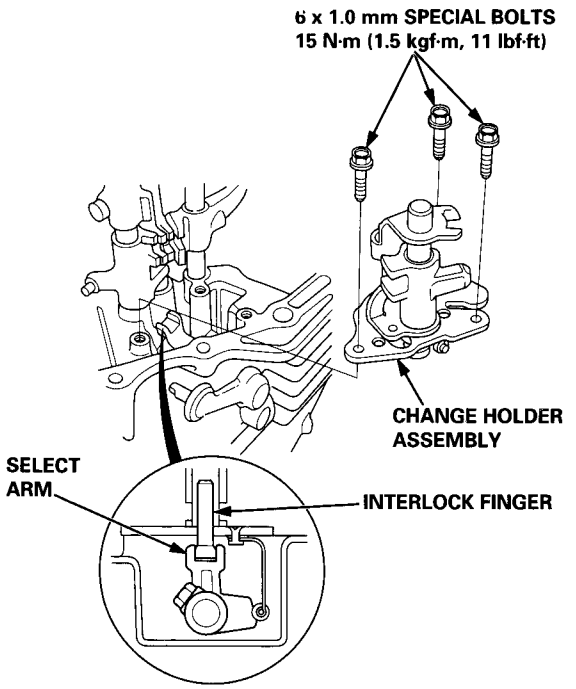

7. Install the reverse idle gear shaft assembly.

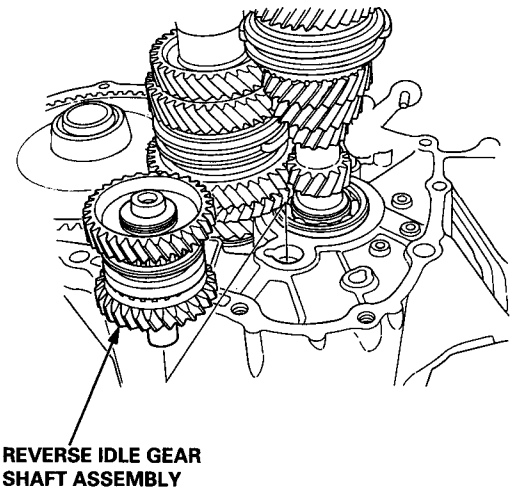

8. Shift the reverse synchro sleeve to the driven gear side, then install the reverse shift fork assembly.

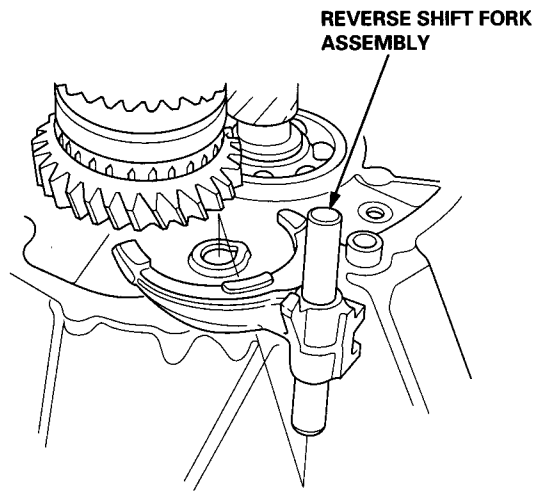

(cont'd)

Reassembly (cont'd)

9. Install the reverse shift arm.

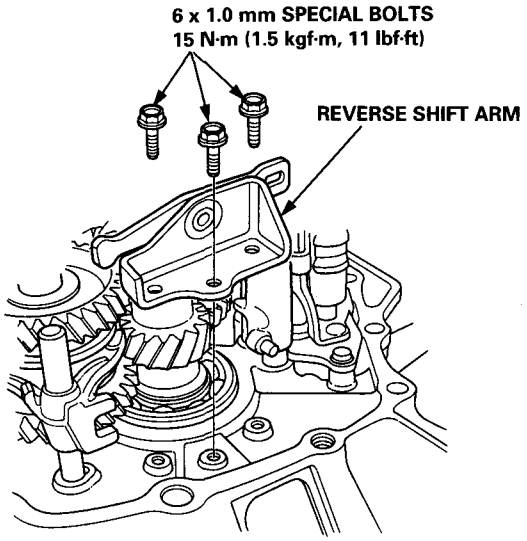

10. Apply liquid gasket to the surface of the transmission housing mating with the clutch housing as shown, and note those items:

- Use liquid gasket (P/N 08718 - 0001).
- Remove any dirt or oil from the sealing surface.
- Seal the entire circumference of the bolt holes to prevent oil leakage.
- If 20 minutes have passed after applying liquid gasket, reapply it and assemble the housings.
- After assembly, wait at least 30 minutes before refilling with oil.

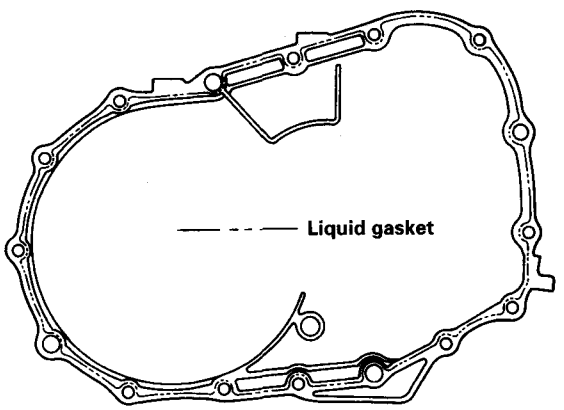

11. Install the dowel pins on the clutch housing.

12. Place the transmission housing over the clutch housing, being careful to line up the shafts.

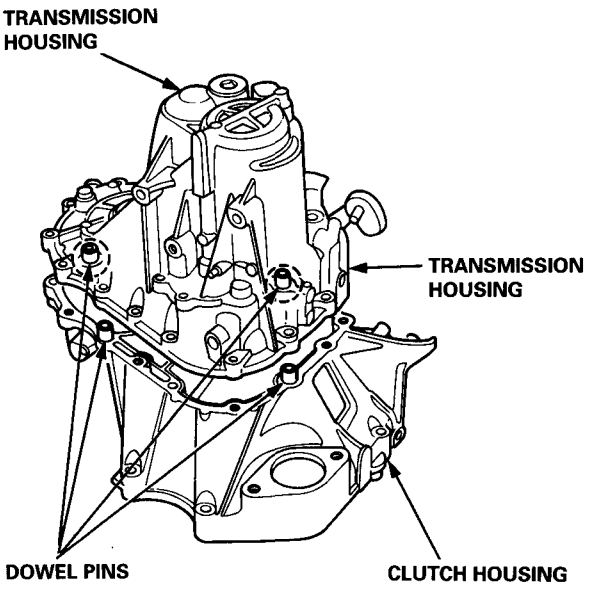

a. Place the shift lever as a shown.

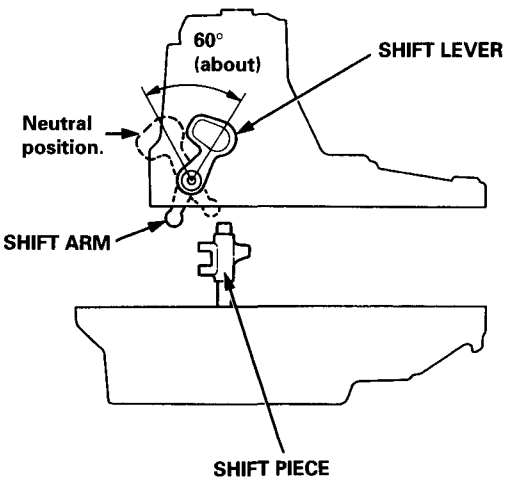

b. Lower the transmission housing, then place the shift arm in the groove of the shift piece by turning the shift lever.

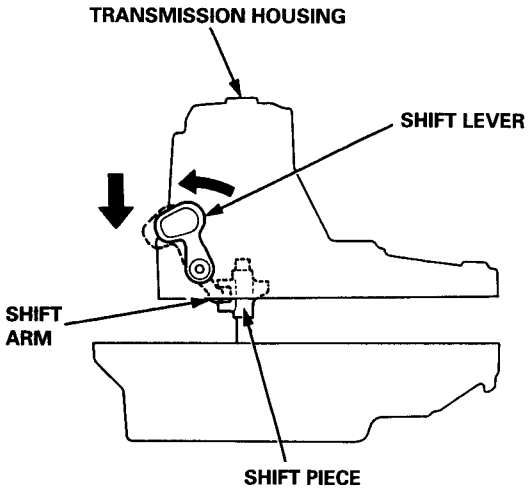

c. Check the operation of the shift lever.

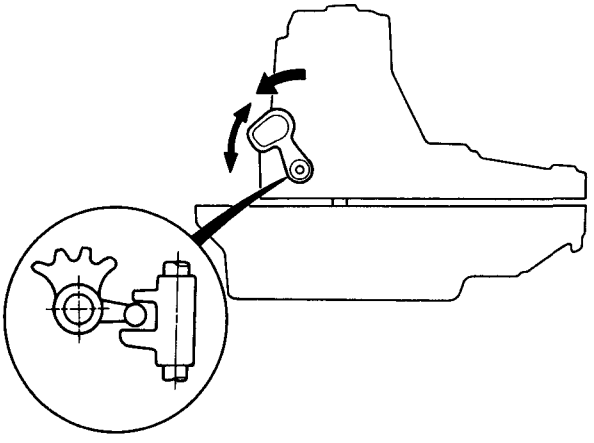

13. Lower the transmission housing with snap ring pliers, and set the snap ring in the groove of the countershaft bearing.

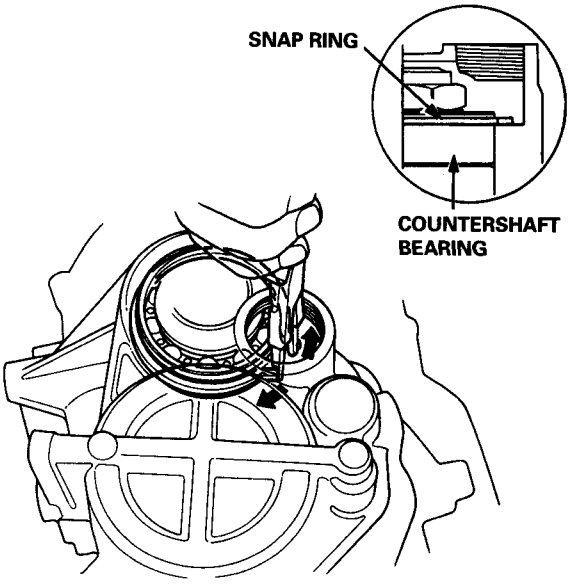

14. Check that the snap ring is securely seated in the groove of the countershaft bearing.

Dimension A as installed: 1.37 – 7.85 mm (0.054 – 0.309 in)

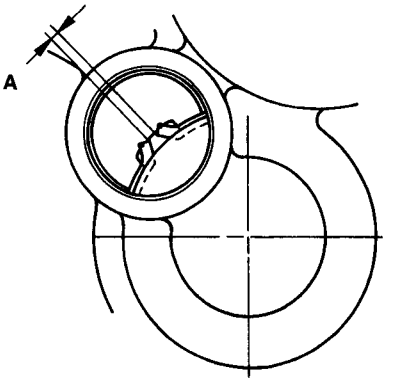

(cont'd)

Reassembly (cont'd)

15. Tighten the transmission housing attaching bolts in a crisscross pattern in several steps as shown below.

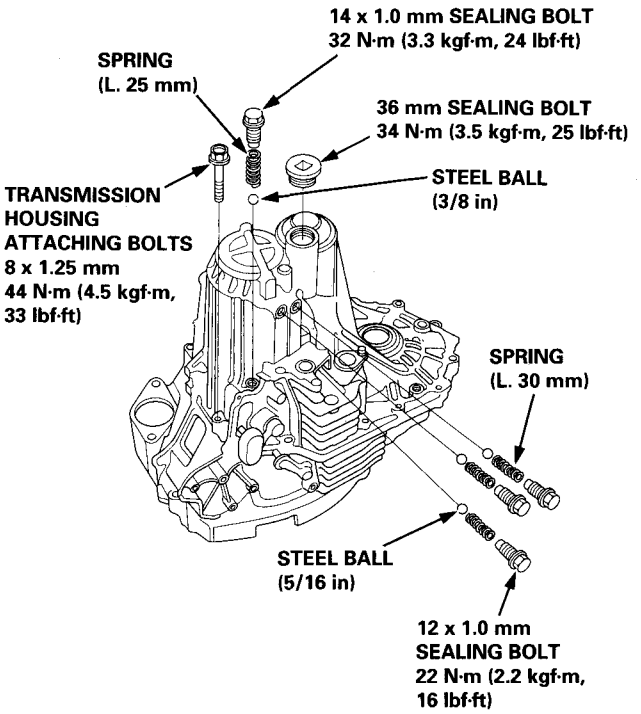

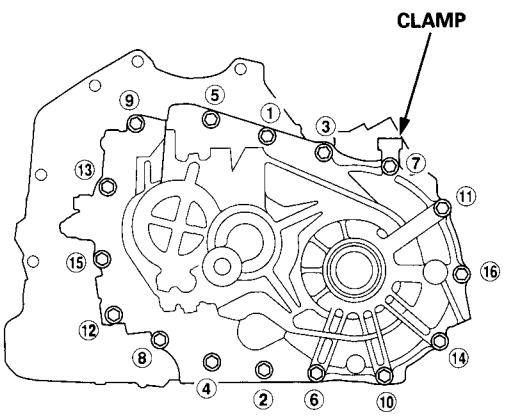

16. Apply liquid gasket (P/N 08718 - 0001) to the threads, and install the 36 mm sealing bolt.

17. Install the steel balls, springs, and sealing bolts.

NOTE: Apply liquid gasket (P/N 08718 - 0001) to the threads, but don't plug the hole with liquid gasket.

18. Apply liquid gasket (P/N 08718-0001) to the threads, and install the back-up light switch and neutral position switch.

A: 8 x 1.25 mm
24 N·m (2.4 kgf·m, 17 lbf·ft)
B: 8 x 1.25 mm
25 N·m (2.6 kgf·m, 19 lbf·ft)
C: 6 x 1.0 mm
12 N·m (1.2 kgf·m, 9 lbf·ft)
D: 6 x 1.0 mm
14 N·m (1.4 kgf·m, 10 lbf·ft)

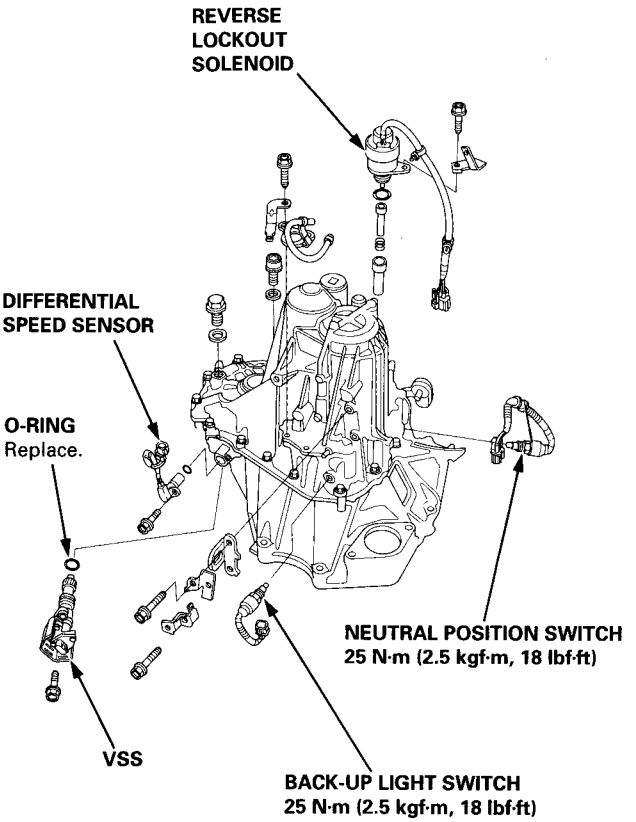

19. Install the differential speed sensor, reverse lockout solenoid, and vehicle speed sensor (VSS).

Transmission Assembly

Installation

NOTE: Use only Super High Temp Urea Grease (P/N 08798 - 9002).

1. Place the transmission on the transmission jack, and raise it to the engine level. Check that the two dowel pins are installed in the clutch housing.
2. Set the release fork to the clutch housing.
3. Install the two transmission housing mounting bolts and engine stiffener.
4. Install the three rear transmission mounting bolts.
5. Loosen the front engine mounting bolt, then install the two front engine mounting bolts to the transmission side.
6. Remove the transmission jack.
7. Install the clutch housing cover.

☆: Corrosion resistant bolt/nut

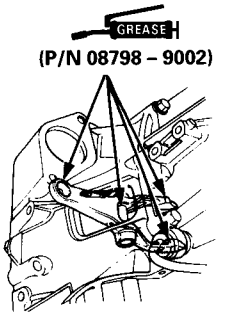

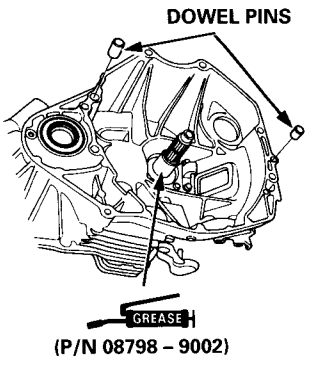

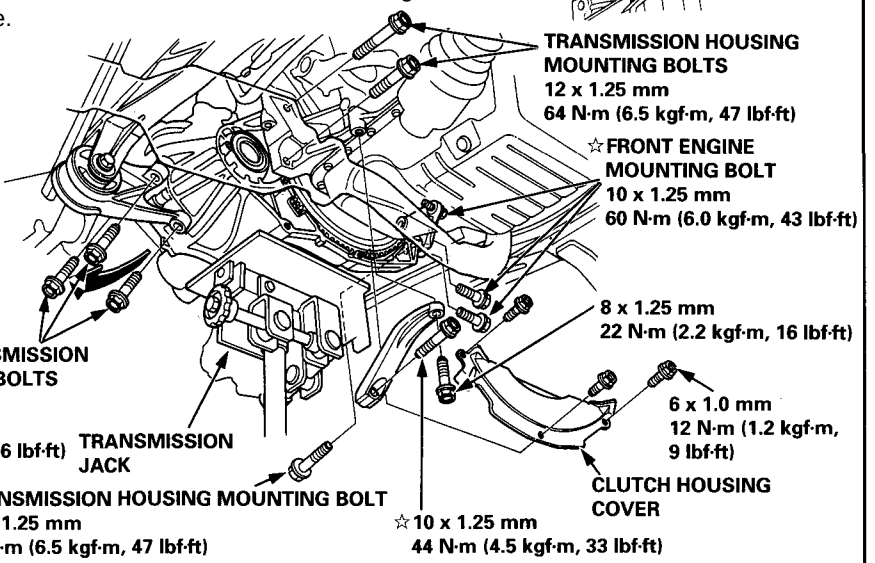

8. Install the release fork in the release hanger, then install the slave cylinder.

☆: Corrosion resistant bolt/nut

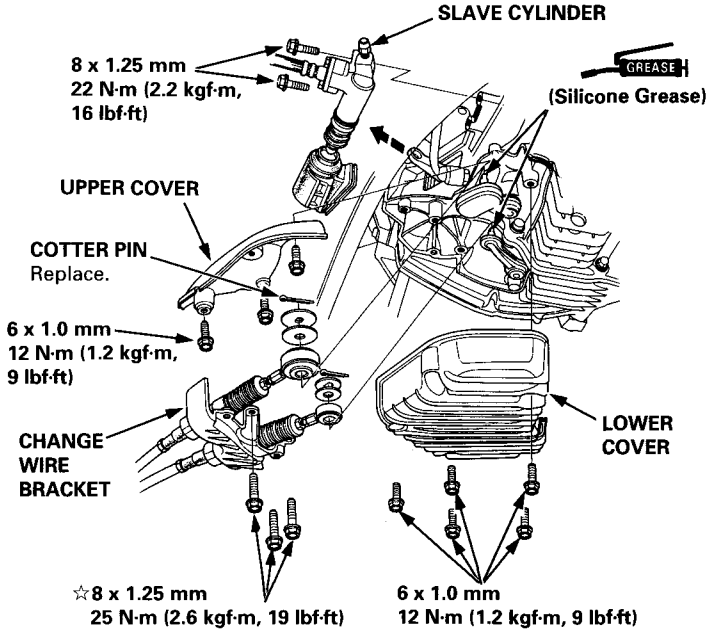

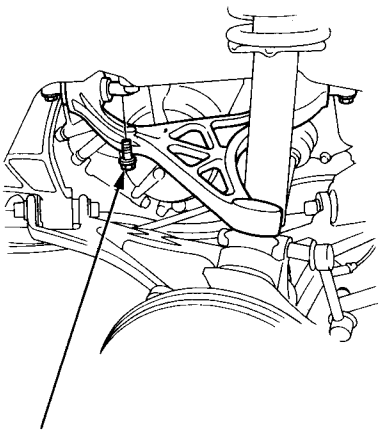

9. Connect the shift cable and select cable. Take care not to bend the cables.
10. Install the upper cover, change wire bracket and lower cover.
11. Install the upper control arm mounting bolt.

(cont'd)

Installation (cont'd)

12. Install a new set ring on the end of the left driveshaft and intermediate shaft.

☆: Corrosion resistant bolt/nut

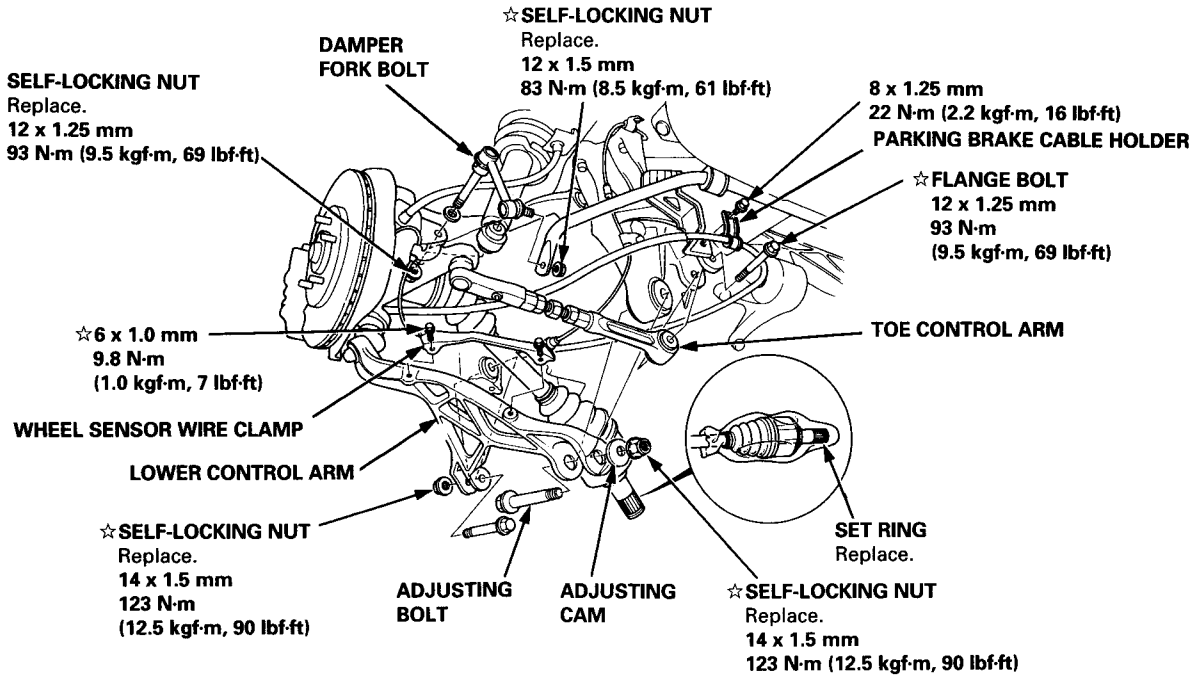

13. Install the left driveshaft (see section 16).
14. Install the lower control arm to the side beam (see section 18). Align the reference marks on the adjusting bolt, adjusting cam and lower control arm.
15. Install the damper fork bolt (see section 18).
16. Install the toe control arm to the side beam (see section 18). Make sure that the arrow marks on the toe control arm are aligned.
17. Install the wheel sensor wire clamp and parking brake cable holder.
18. Install the intermediate shaft, and tighten the intermediate shaft mounting bolts to the intermediate shaft support base.
19. Install the intermediate shaft heat cover.

☆: Corrosion resistant bolt/nut

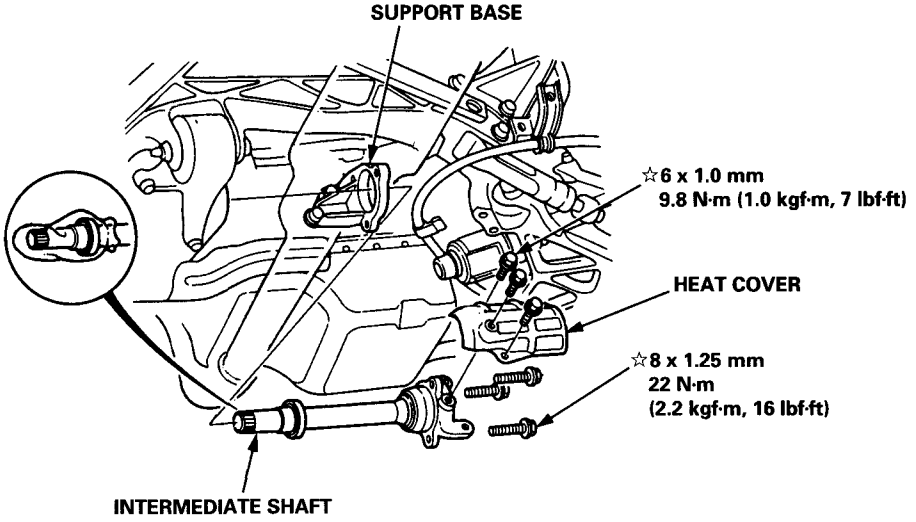

20. Install the right driveshaft onto the intermediate shaft.

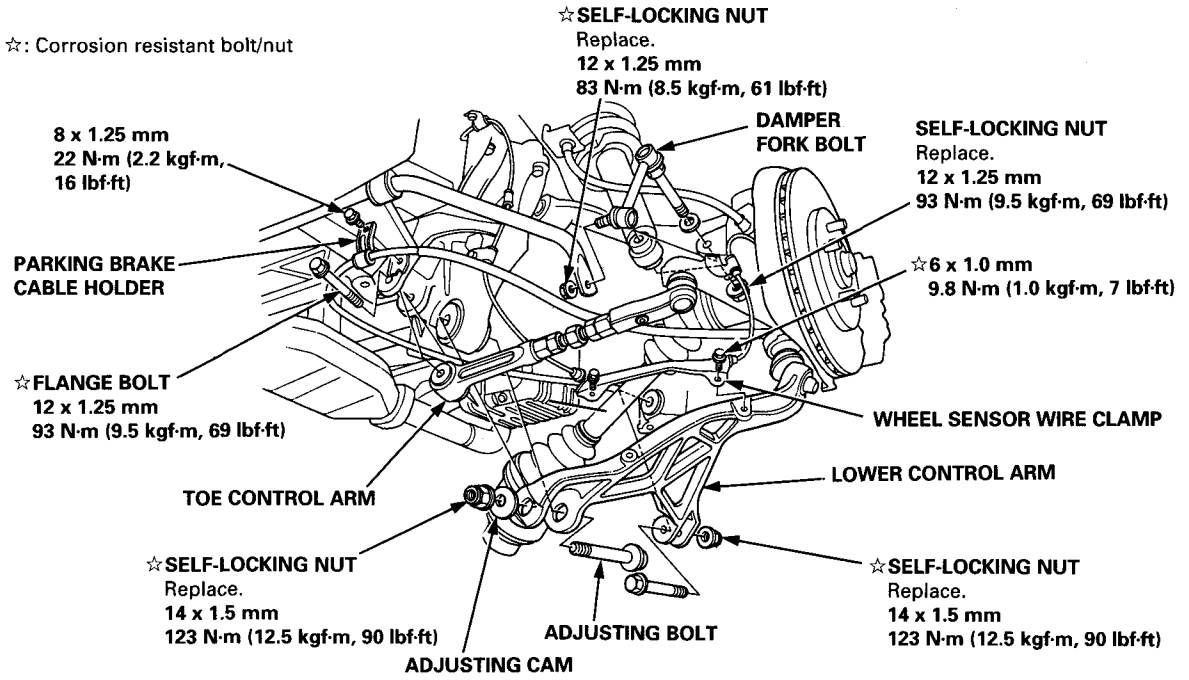

21. Install the lower control arm to the side beam (see section 18). Align the reference marks on the adjusting bolt, adjusting cam and lower control arm.
22. Install the damper fork bolt (see section 18).
23. Install the toe control arm to the side beam (see section 18). Make sure that the arrow marks on the toe control arm are aligned.
24. Install the wheel sensor wire clamp and parking brake cable holder.
25. Install the rear beam rod.

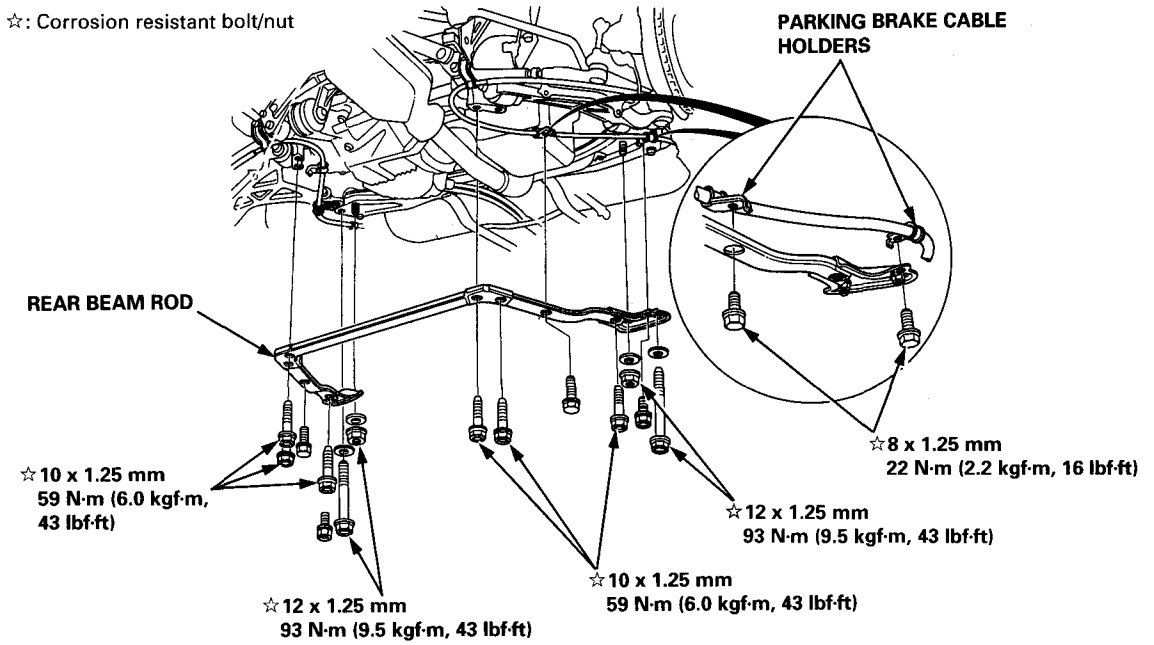

26. Install the parking brake cable holders on the rear beam rod. (cont'd)

Transmission Assembly

Installation (cont'd)

27. Install the transmission mount and two transmission housing mounting bolts.
28. Install the starter motor, and connect the starter motor cables. Make sure that the crimped side of the ring terminals facing out (see section 23).
29. Install the transmission ground cable and jumper connector, and connect the back-up light switch, neutral position switch, differential speed sensor, reverse lockout solenoid, and vehicle speed sensor (VSS) connector.
30. Install the control box, and connect the control box connectors.
31. Install the air cleaner assembly.
32. Install the strut bar.
33. Refill the transmission with the recommended oil (see page 13-3).
34. Connect the battery positive (+) and negative (-) cables to the battery.
35. Inspect the rear camber (see section 18).
36. Check the clutch operation.
37. Shift the transmission, and check for smooth operation.

☆: Corrosion resistant bolt/nut

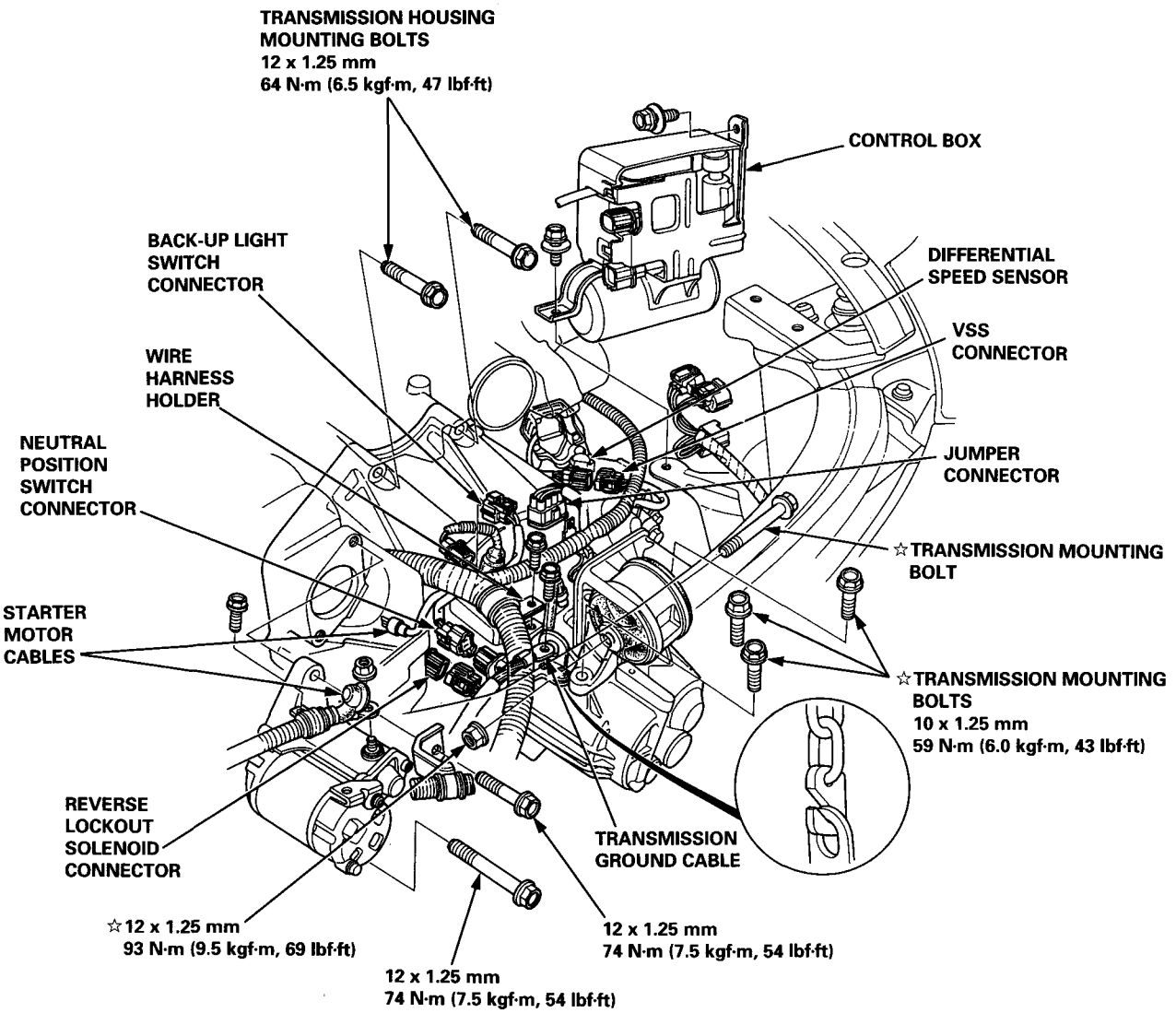

Gearshift Mechanism

Overhaul

NOTE:
- Inspect rubber parts for wear and damage when disassembling.
- Check that the new cotter pin is seated firmly.

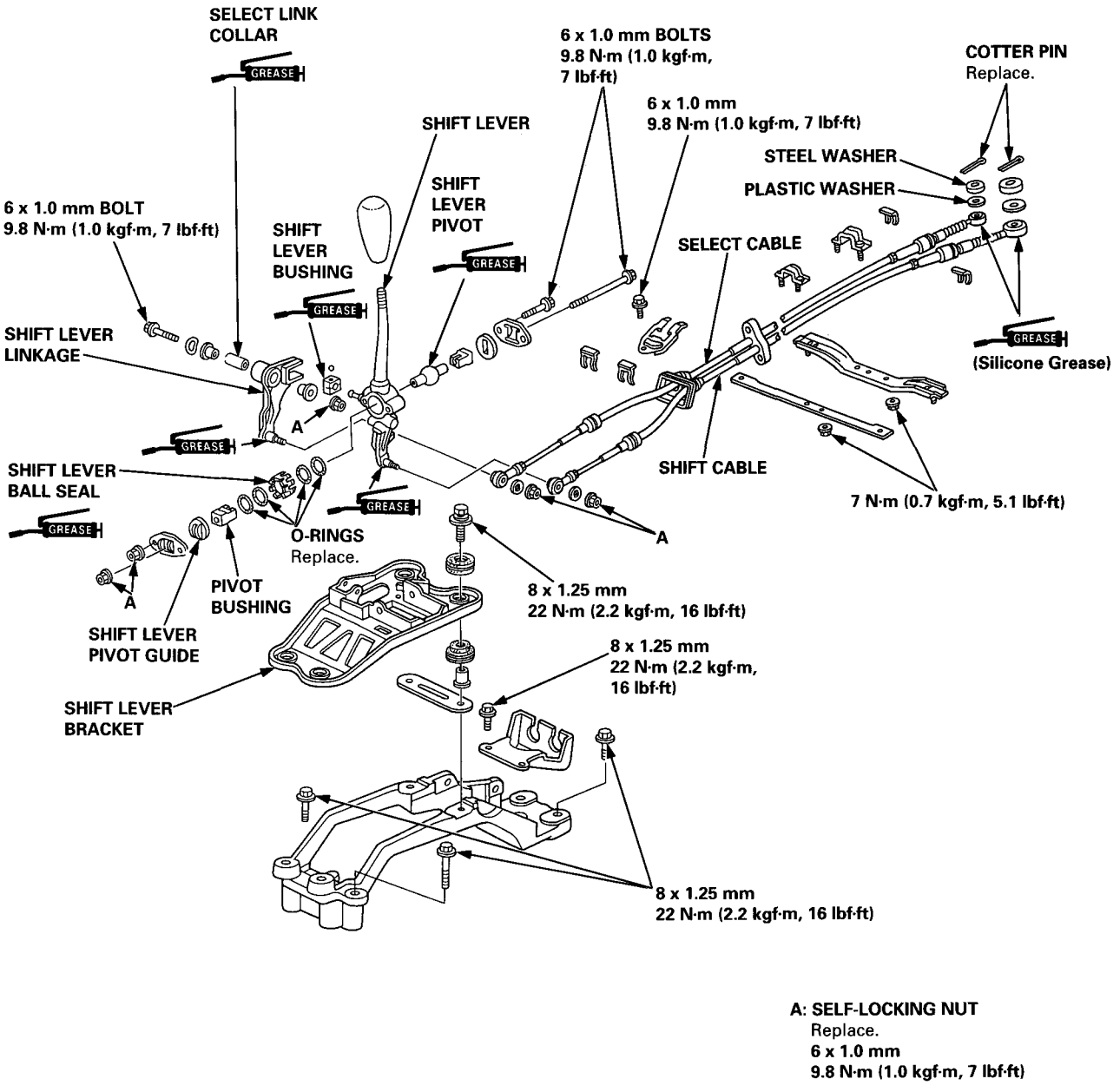

A: SELF-LOCKING NUT
Replace.
6 x 1.0 mm
9.8 N·m (1.0 kgf·m, 7 lbf·ft)

Automatic Transmission

Special Tools 14–2
Description
General Operation 14–3
Clutches 14–6
Power Flow 14–8
Electronic Control System . 14–14
Hydraulic Control 14–18
Hydraulic Flow 14–28
Lock–up System 14–38
ATF Cooler 14–45

Electrical System

Component Locations 14–46
Troubleshooting Procedures
'97 Model 14–50
'98-05 Models 14–4a
Symptom to Component Chart
'97–'03 Models 14–8a
'04-05 Models 14–2h
Lock–up Control Solenoid Valve A/B
Test 14–22a
Replacement 14–22a
Shift Control Solenoid Valve A/B
Test 14–23a
Replacement 14–23a
Linear Solenoid
Test 14–94
Replacement 14–94
Mainshaft/Countershaft Speed Sensors
Replacement 14–87
Transmission Control Module (TCM)
Replacement 14–97

Hydraulic System

Symptom–to–component Chart 14–98
Road Test 14–102
Stall Speed Test 14–104
Fluid Level Checking/Changing 14–105
Pressure Testing 14–106

Transmission

Transmission
Removal 14–110
Reassembly 14–161
Installation 14–167
Component Location Index
Left Side Cover/Transmission 14–114
Transmission Housing 14–116
Torque Converter Housing/Valve Body 14–118
Left Side Cover Removal 14–120
Transmission Housing
Removal 14–121
Valve Body Removal 14–122
Valve Body Repair 14–123
Valve Assembly 14–124
Valve Caps Description 14–126
ATF Pump Inspection 14–127
Main Valve Body
Disassembly/Inspection/Reassembly 14–128
Secondary Valve Body
Disassembly/Inspection/Reassembly 14–130
Servo Body/Throttle Valve Body
Disassembly/Inspection/Reassembly 14–132
Regulator Valve Body
Disassembly/Inspection/Reassembly 14–134
Lock-up Valve Body
Disassembly/Inspection/Reassembly 14–135
2nd Accumulator Body
Disassembly/Inspection/Reassembly 14–136
Mainshaft
Disassembly/Inspection/Reassembly 14–137
Countershaft
Disassembly/Inspection/Reassembly 14–138
Inspection/Installation 14–139
One–way Clutch/Parking Gear
Disassembly/Inspection/Reassembly 14–142
Secondary Shaft
Disassembly/Inspection/Reassembly 14–143
Inspection/Installation 14–144
Clutch
Component Location Index 14–146
Disassembly 14–149
Reassembly 14–151
1st–hold Clutch Bearing
Replacement 14–155
Torque Converter Housing Bearings
Mainshaft Bearing/Oil Seal Replacement 14–156
Countershaft Bearing Replacement 14–157
Secondary Shaft Bearing Replacement 14–157
Transmission Housing Bearings
Replacement 14–158
Reverse Idler Gear
Installation 14–159
Manual Valve Detent Spring
Replacement/Adjustment .. 14–160
Parking Brake Stopper
Inspection/Adjustment 14–160
Torque Converter/Drive Plate
Component Location Index 14–166
Shift Cable
Adjustment 14–171
Removal/Installation 14–172
Shift Lever 14–173
Shift Indicator Panel
Adjustment 14–174
Shift Lock Release Cover
Installation 14–6c

Special Tools

Ref. No.	Tool Number	Description	Qty	Page Reference
①	07GAE – PG40200 or 07GAE – PG4020A	Clutch Spring Compressor Bolt Assembly	1	14-149, 14-152
②	07HAC – PK4010A	Housing Puller	1	14-121
**③	07LAE – PX40100	Clutch Spring Compressor Attachment	2	14-149, 14-152
④	07MAJ – PY4011A	A/T Oil Pressure Hose, 2210 mm	4	14-106
⑤	07MAJ – PY40120	A/T Oil Pressure Hose, Adapter	4	14-106
⑥	07PAZ – 0010100	SCS Service Connector	1	14-51, 14-5a
⑦	07SAZ – 001000A	Backprobe Set	2	14-53, 14-102, 14-7a
⑧	07406 – 0020400	A/T Oil Pressure Gauge w/pnel	1	14-106
⑨	07406 – 0070300	A/T Low Pressure Gauge w/pnel	1	14-106
*⑩	07736 – A01000B or 07736 – A01000A	Adjustable Bearing Puller, 25 – 40 mm	1	14-157
⑪	07746 – 0010500	Attachment, 62 x 68 mm	1	14-156, 14-157
⑫	07746 – 0010600	Attachment, 72 x 75 mm	1	14-155, 14-156, 14-157
⑬	07749 – 0010000	Driver	1	14-155, 14-156, 14-157
⑭	07924 – PJ4010A	Mainshaft Holder	1	14-120, 14-163
⑮	07947 – 6340500	Driver Attachment	1	14-156

* Must be used with commercially available 3/8" – 16 slide hammer.

** 07HAE – PL50100 may be used to substitute one of these tools.

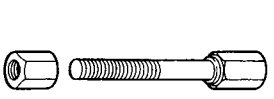

①

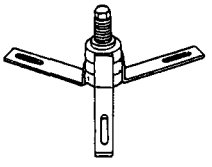

②

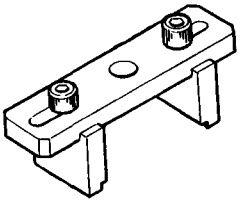

③

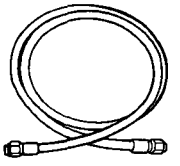

④

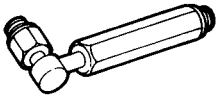

⑤

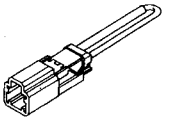

⑥

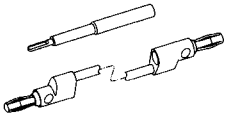

⑦

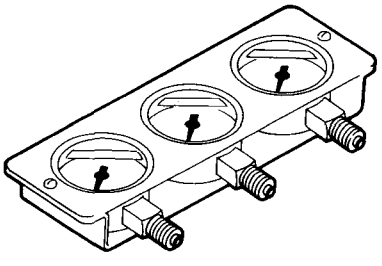

⑧

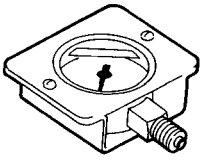

⑨

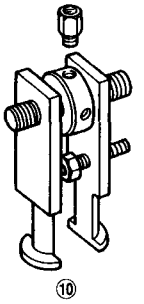

⑩

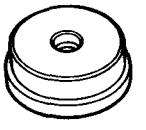

⑪

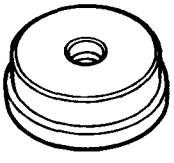

⑫

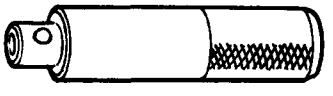

⑬

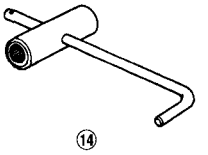

⑭

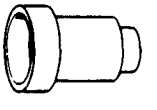

⑮

Description

The automatic transmission is a combination of a 3-element torque converter and a triple-shaft electronically controlled automatic transmission which provides 4 speeds forward and 1 speed reverse. The entire unit is positioned in line with the engine.

Torque Converter, Gears, and Clutches

The torque converter consists of a pump, turbine, and stator, assembled in a single unit.
They are connected to the engine crankshaft so they turn together as a unit as the engine turns.
Around the outside of the torque converter is a ring gear which meshes with the starter pinion when the engine is being started. The entire torque converter assembly serves as a flywheel while transmitting power to the transmission mainshaft. The transmission has three parallel shafts: the mainshaft, the countershaft, and the secondary shaft. The mainshaft is in line with the engine crankshaft.
The mainshaft includes the 1st and 4th clutches, and gears for 3rd, 4th, reverse, and 1st (3rd gear is integral with the mainshaft, while reverse gear is integral with 4th gear).
The countershaft includes the 1st-hold and 3rd clutches, and gears for 2nd, 3rd, 4th, reverse, 1st, and parking.
The secondary shaft includes the 2nd clutch and gears for 2nd and 3rd.
The 4th and reverse gears can be locked to the countershaft at its center, providing 4th gear or reverse, depending on which way the selector is moved.
The gears on the mainshaft and secondary shaft are in constant mesh with those on the countershaft.
When certain combinations of gears in the transmission are engaged by clutches, power is transmitted from the mainshaft to the countershaft to provide 1, 2, 3/M, D, and R positions.

Electronic Control

The electronic control system consists of the Transmission Control Module (TCM), sensors, a linear solenoid, a shift switch, and 4 solenoid valves. Shifting and lock-up are electronically controlled for comfortable driving under all conditions.
The TCM is located on the insulator center bulkhead, behind the driver's seat.

Hydraulic Control

The valve bodies include the main valve body, secondary valve body, servo body, regulator valve body, throttle valve body, lock-up valve body, and the 2nd accumulator body.
They are bolted to the torque converter housing as an assembly.
The main valve body contains the manual valve, 1-2 shift valve, 2-3 shift valve, 3-4 shift valve, relief valve, one-way relief valve, and oil pump gears.
The secondary valve body contains the 3-2 kick-down valve, clutch pressure control (CPC) valve, 2nd orifice control valve, 3rd orifice control valve, modulator valve, 4th exhaust valve, servo control valve, 2nd exhaust valve, and 4-3 kick-down valve.
The servo body contains the accumulator pistons and servo valve. The throttle valve body includes the throttle valve B which is bolted to the servo body.
The regulator valve body contains the pressure regulator valve, lock-up control valve, and cooler relief valve. Fluid from the regulator passes through the manual valve to the various control valves.
The lock-up valve body contains the lock-up timing B valve and lock-up shift valve. The 2nd accumulator body contains the accumulator pistons and limited slip differential relief valve.
The torque converter check valve is located in the torque converter housing, under the main valve body.
The 1st, 1st-hold, 3rd, and 4th clutches receive fluid from their respective feed pipes and the 2nd clutch receives fluid from the internal hydraulic circuit.

Shift Control Mechanism

Input from various sensors located throughout the vehicle determines which shift control solenoid valve the TCM will activate. Activating a shift control solenoid valve changes modulator pressure, causing a shift valve to move. This pressurizes a line to one of the clutches, engaging that clutch and its corresponding gear.

Lock-up Mechanism

In 3/M position and D position in 2nd, 3rd, and 4th, pressurized fluid is drained from the back of the torque converter through a fluid passage, causing the lock-up piston to be held against the torque converter cover. As this takes place, the mainshaft rotates at the same speed as the engine crankshaft. Together with hydraulic control, the TCM optimizes the timing of the lock-up mechanism.
The lock-up valves control the range of lock-up according to lock-up control solenoid valves A and B, and throttle valve B. When lock-up control solenoid valves A and B activate, modulator pressure changes. The lock-up control solenoid valves A and B are mounted on the torque converter housing, and are controlled by the TCM.

(cont'd)

Description

(cont'd)

Gear Selection

The shift lever has seven positions: [P] PARK, [R] REVERSE, [N] NEUTRAL, [D] 1st through 4th gear positions, [3/M] 3rd gear and sport shifting (manual shifting) mode (1st through 4th gears) with shift switch, [2] 2nd gears and [1] 1st gear.

Position	Description
[P] PARK	Rear wheels locked; parking pawl engaged with parking gear on countershaft. All clutches released.
[R] REVERSE	Reverse; reverse selector engaged with countershaft reverse gear and 4th clutch locked.
[N] NEUTRAL	All clutches released.
[D] DRIVE (1st through 4th: automatic shifting)	General driving; starts off in 1st, shifts automatically to 2nd, 3rd, then 4th, depending on vehicle speed and throttle position. Downshifts through 3rd, 2nd, and 1st on deceleration to stop. The lock-up mechanism comes into operation in 2nd, 3rd, and 4th gear.
[3/M] DRIVE (1st through 4th: manual shifting)	Manual Shifting Driving; starts off 1st or 2nd, shifts to 2nd, 3rd, and 4th with the shift switch operation. Although, this position has an automatic shifting area: • 1-2 upshift • 4-3 downshift, 3-1 downshift, 2-1 downshift depending on vehicle speed. When the vehicle decelerates to a stop, the transmission shifts to 1st gear automatically. The transmission can shift to 2nd gear by pushing the shift switch up while the vehicle is stopped. The lock-up mechanism comes into operation in 2nd, 3rd, and 4th gear.
[2] SECOND	Driving in 2nd gear; stays in 2nd gear, does not shift up and down. For engine braking or better traction starting off on loose or slippery surface.
[1] FIRST	Driving in 1st gear, stays in 1st gear, does not shift up. For engine braking.

Starting is possible only in [P] and [N] positions through use of a slide-type, neutral-safety switch.

Automatic Transaxle (A/T) Gear Position Indicator

The A/T gear position indicator in the instrument panel shows what gear has been selected without having to look down at the console.

With the shift lever in the [3/M] position, the indicator light next to the [M] in the instrument panel will display the gear selected.

ATF Cooler

With this mid-engine type vehicle, the radiator is mounted at the front of the vehicle, so the ATF cooler is installed directly on the transmission housing.

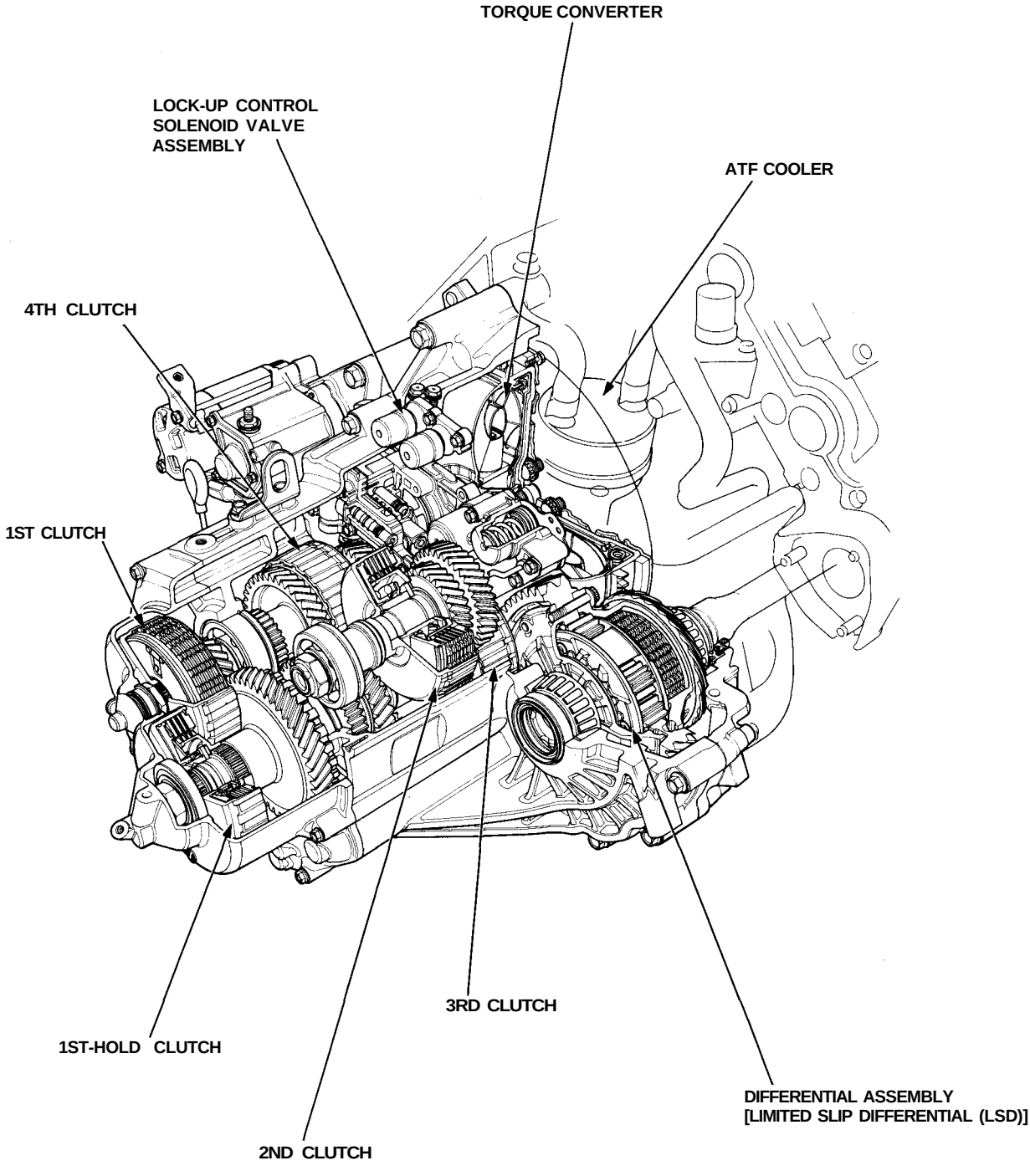
TORQUE CONVERTER
LOCK-UP CONTROL SOLENOID VALVE ASSEMBLY
ATF COOLER
4TH CLUTCH
1ST CLUTCH
1ST-HOLD CLUTCH
3RD CLUTCH
2ND CLUTCH
DIFFERENTIAL ASSEMBLY [LIMITED SLIP DIFFERENTIAL (LSD)]

Description

Clutches

The four-speed automatic transmission uses hydraulically-actuated clutches to engage or disengage the transmission gears. When hydraulic pressure is introduced into the clutch drum, the clutch piston is applied. This presses the friction discs and steel plates together, locking them so they don't slip. Power is then transmitted through the engaged clutch pack to its hub-mounted gear.

When hydraulic pressure is bled from the clutch pack, the piston releases the friction discs and the steel plates, and they are free to slide past each other. This allows the gear to spin independently of its shaft, transmitting no power.

1st Clutch
The 1st clutch engages/disengages 1st gear, and is located at the end of the mainshaft, just behind the left side cover.
The 1st clutch is supplied hydraulic pressure by its ATF feed pipe within the mainshaft.

1st-hold Clutch
The 1st-hold clutch engages/disengages 1st-hold or [1] position, and is located at the end of the countershaft, just behind the left side cover. The 1st-hold clutch is supplied hydraulic pressure by its ATF feed pipe within the countershaft.

2nd Clutch
The 2nd clutch engages/disengages 2nd gear, and is located on the secondary shaft. The 2nd clutch is supplied hydraulic pressure through the secondary shaft by a circuit connected to the 2nd accumulator body.

3rd Clutch
The 3rd clutch engages/disengages 3rd gear, and is located at the end of the countershaft, opposite the left side cover.
The 3rd clutch is supplied hydraulic pressure by its ATF feed pipe within the countershaft.

4th Clutch
The 4th clutch engages/disengages 4th gear, as well as reverse gear, and is located at the center of the mainshaft. The 4th clutch is supplied hydraulic pressure by its ATF feed pipe within the mainshaft.

One-way Clutch
The one-way clutch is positioned between the parking gear and 1st gear, with the parking gear splined to the countershaft. The 1st gear provides the outer race surface, and the parking gear provides the inner race surface. The one-way clutch locks up when power is transmitted from the mainshaft 1st gear to the countershaft 1st gear.
The 1st clutch and gears remain engaged in the 1st, 2nd, 3rd, and 4th gear ranges in the [2], [3/M], and [D] position.
However, the one-way clutch disengages when the 2nd, 3rd, or 4th clutches/gears are applied in the [2], [3/M], and [D] position. This is because the increased rotational speed of the gears on the countershaft over-ride the locking "speed range" of the one-way clutch. Thereafter, the one-way clutch freewheels with the 1st clutch still engaged.

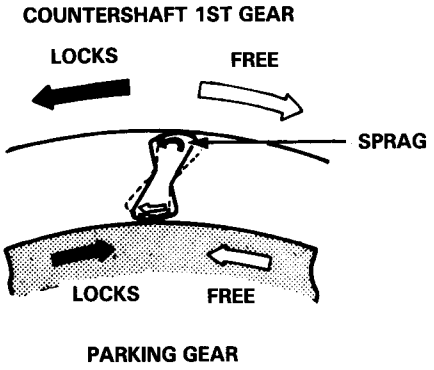

View from Left side cover side.

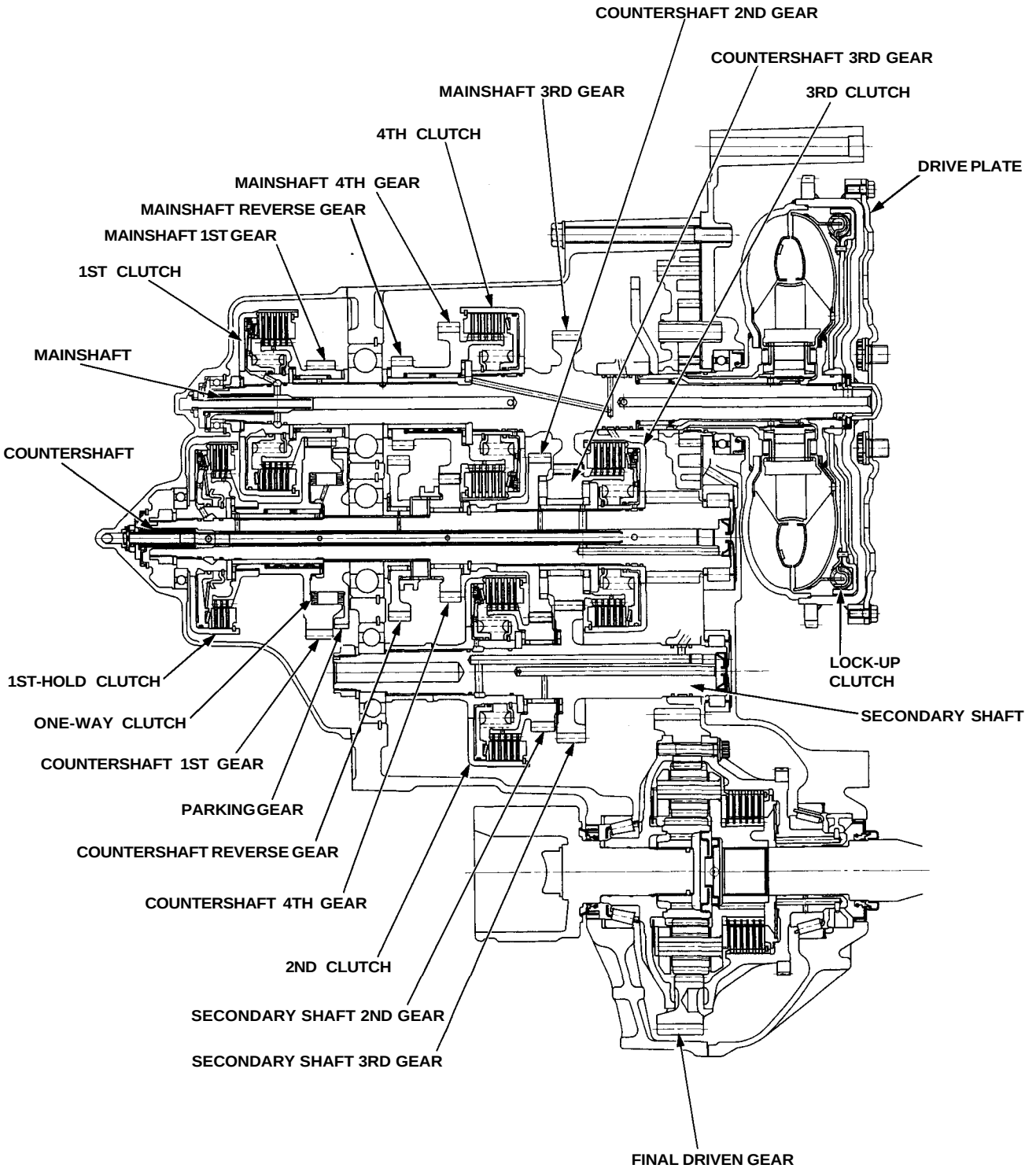
COUNTERSHAFT 2ND GEAR
COUNTERSHAFT 3RD GEAR
MAINSHAFT 3RD GEAR
3RD CLUTCH
4TH CLUTCH
DRIVE PLATE
MAINSHAFT 4TH GEAR
MAINSHAFT REVERSE GEAR
MAINSHAFT 1ST GEAR
1ST CLUTCH
MAINSHAFT
COUNTERSHAFT
LOCK-UP CLUTCH
SECONDARY SHAFT
1ST-HOLD CLUTCH
ONE-WAY CLUTCH
COUNTERSHAFT 1ST GEAR
PARKING GEAR
COUNTERSHAFT REVERSE GEAR
COUNTERSHAFT 4TH GEAR
2ND CLUTCH
SECONDARY SHAFT 2ND GEAR
SECONDARY SHAFT 3RD GEAR
FINAL DRIVEN GEAR

Description

Power Flow

PART / RANGE	TORQUE CONVERTER	1ST GEAR 1ST HOLD CLUTCH	1ST GEAR 1ST CLUTCH	1ST GEAR ONE-WAY CLUTCH	2ND GEAR 2ND CLUTCH	3RD GEAR 3RD CLUTCH	4th GEAR	4th CLUTCH	REVERSE GEAR	PARKING GEAR
P	○	x	x	x	x	x	x	x	x	○
R	○	x	x	x	x	x	x	○	○	x
N	○	x	x	x	x	x	x	x	x	x
D 3/M 1ST	○	x	○	○	x	x	x	x	x	x
D 3/M 2ND	○	x	○*	x	○	x	x	x	x	x
D 3/M 3RD	○	x	○*	x	x	○	x	x	x	x
D 3/M 4TH	○	x	○*	x	x	x	○	○	x	x
2	○	x	○*	x	○	x	x	x	x	x
1	○	○	○	x	x	x	x	x	x	x

○: Operates, x: Doesn't operate, *: Although the 1st clutch engages, driving power is not transmitted as the one-way clutch slips.

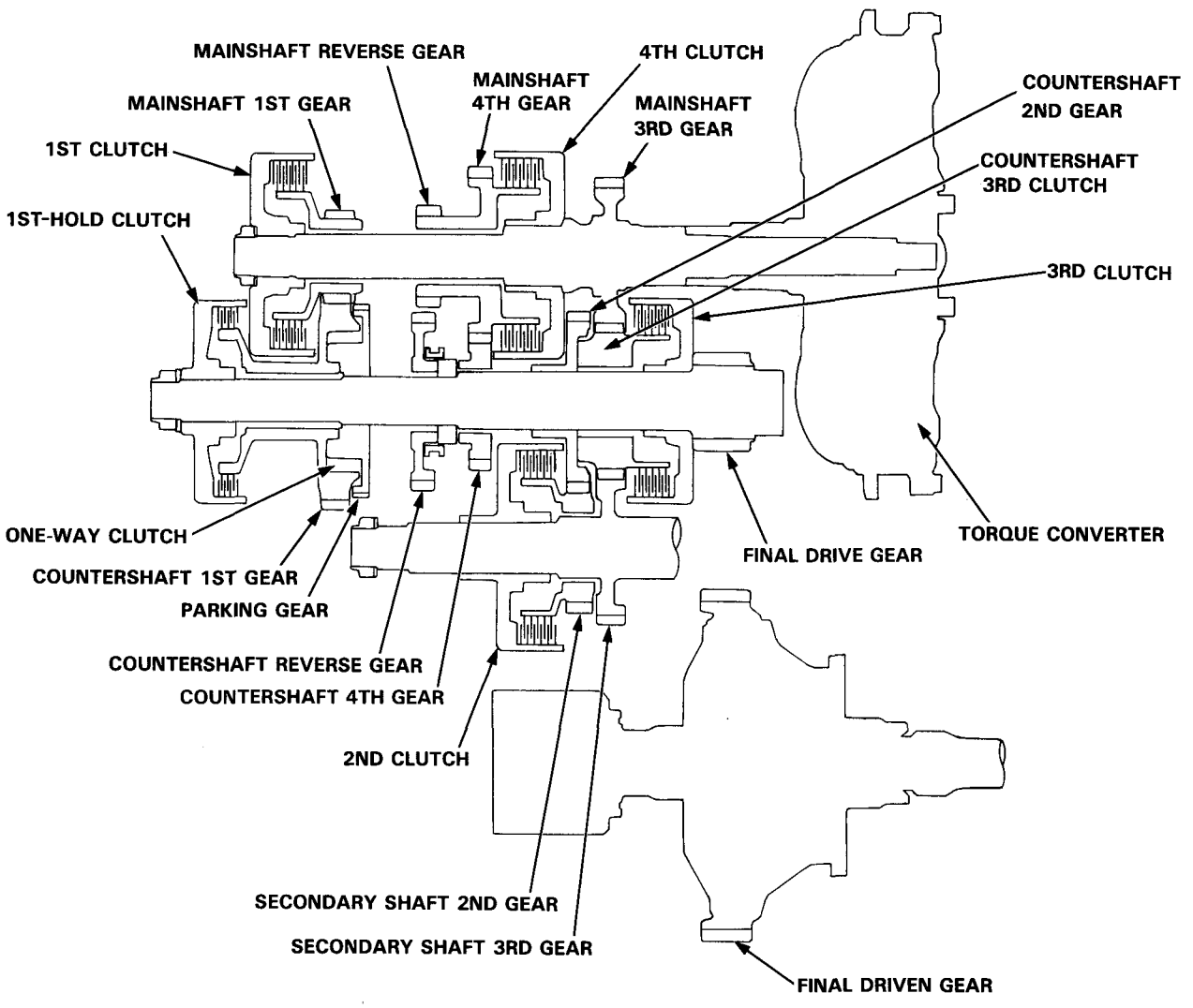

1st Speed in [1] Position

At [1] position, hydraulic pressure is applied to the 1st clutch and to the 1st-hold clutch.

The power flow when accelerating is as follows;

1. Hydraulic pressure is applied to the 1st clutch on the mainshaft, and power is transmitted via the 1st clutch to the mainshaft 1st gear.

2. Power transmitted to the mainshaft 1st gear is conveyed via the countershaft 1st gear to the one-way clutch on the inside of the countershaft 1st gear. The one-way clutch is used to drive the countershaft.

3. Power is transmitted to the final drive gear and drives the final driven gear.
   Hydraulic pressure is applied to the 1st-hold clutch, but the countershaft is rotated by the one-way clutch.

The power flow when decelerating is as follows;

1. Rolling resistance from the road surface through the rear wheels to the final drive gear, then to the countershaft 1st gear via the 1st-hold clutch, which is applied during deceleration.

2. The one-way clutch becomes free because the countershaft is rotating in reverse.

3. The counterforce conveyed to the countershaft 1st gear turns the mainshaft 1st gear. Since hydraulic pressure is also applied to the 1st clutch, counterforce is also transmitted to the mainshaft. As a result, engine braking can be obtained with 1st gear.

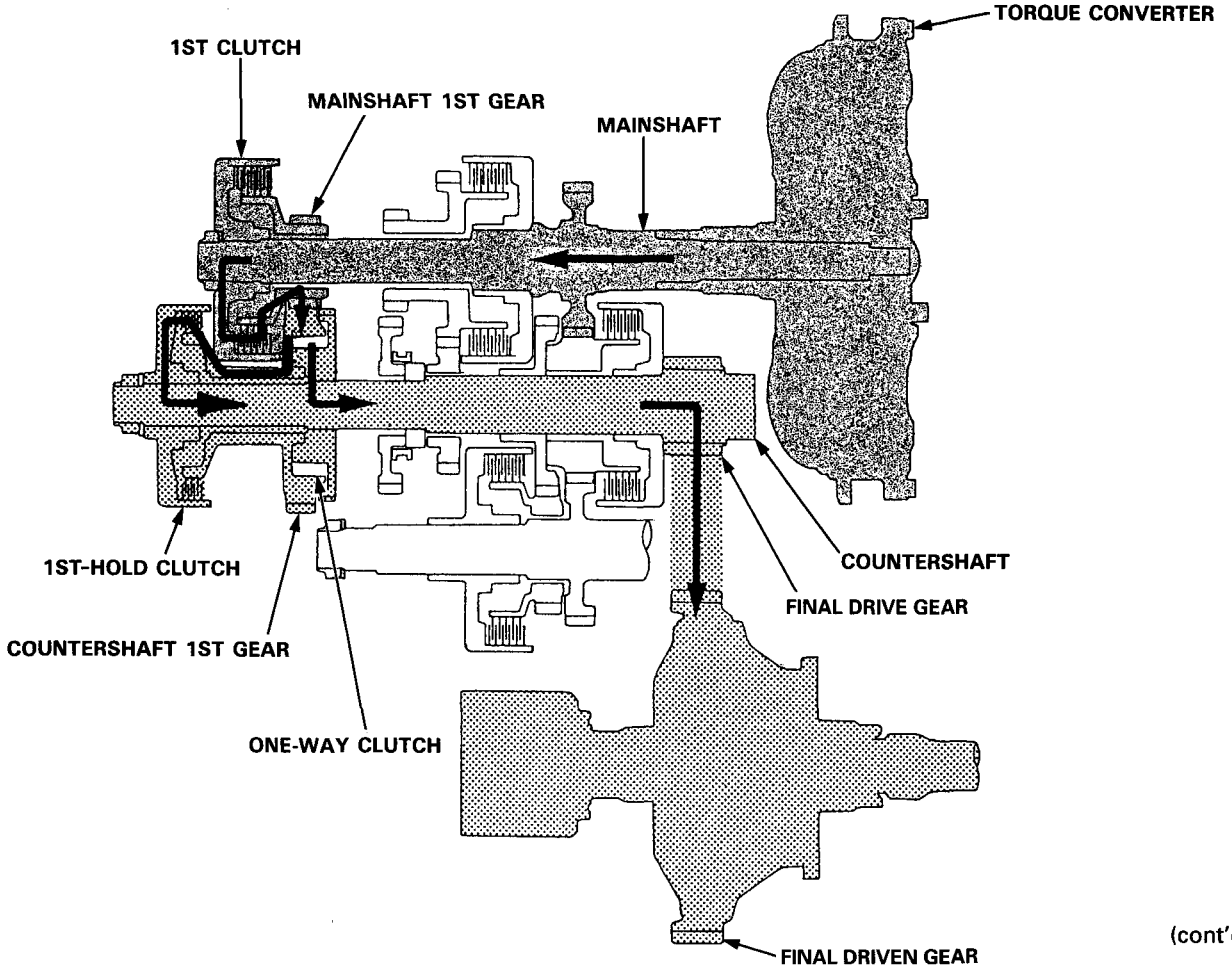

(cont'd)

Power Flow (cont'd)

1st Gear in [3/M] and [D] positions

In [D] position, the optimum gear is automatically selected from the gear ratios of 1st, 2nd, 3rd, and 4th speeds, according to conditions such as the balance between throttle opening (engine load) and vehicle speed.

1. Hydraulic pressure is applied to the 1st clutch, which rotates together with the mainshaft, and the mainshaft 1st gear.
2. Power is transmitted to the countershaft 1st gear, and it drives the countershaft via the one-way clutch.
3. Power is transmitted to the final drive gear, and it drives the final driven gear.

NOTE: Hydraulic pressure is not applied to the 1st-hold clutch in except in [1] position.

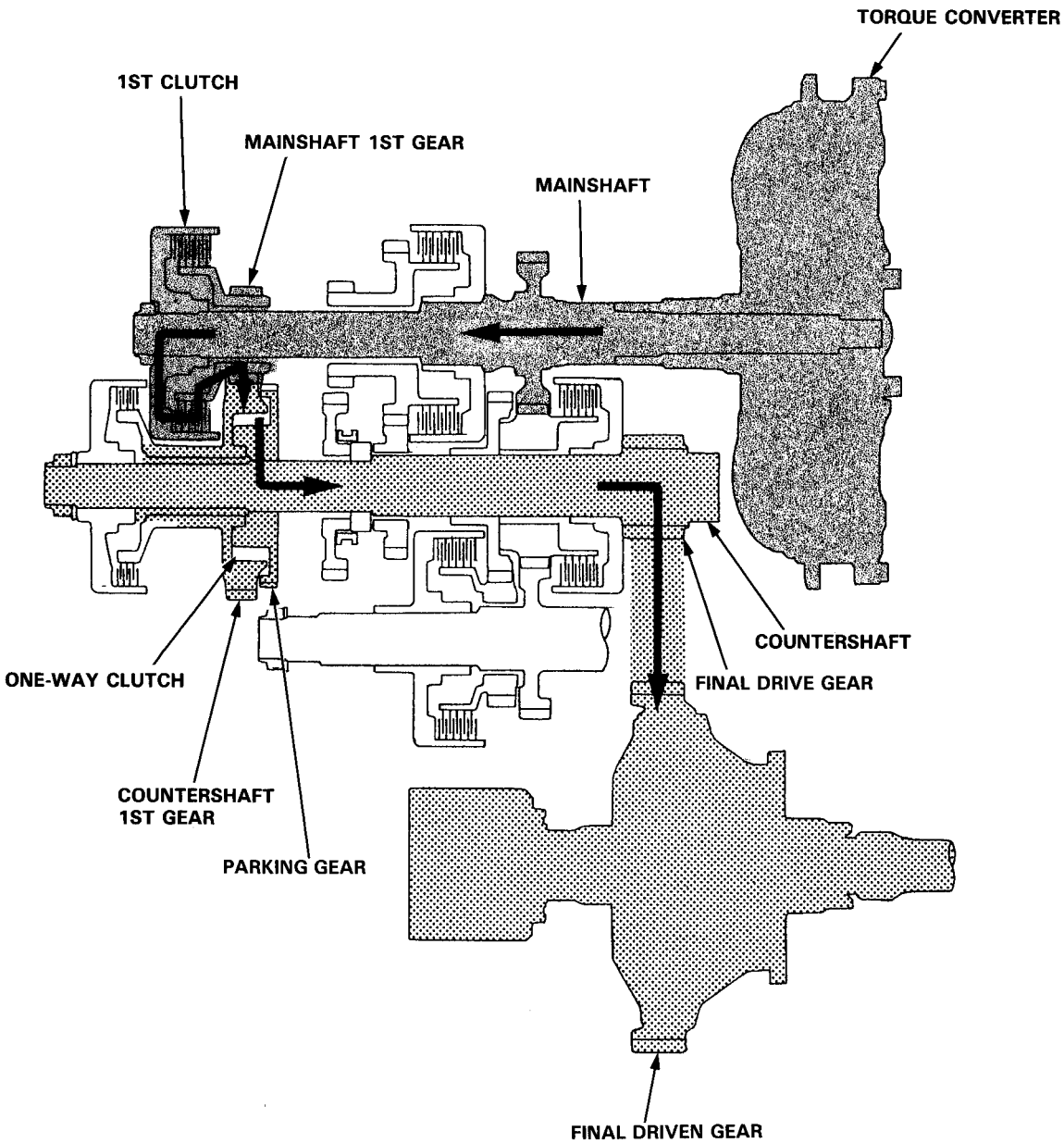

2nd Gear in [2], [3/M] and [D] Positions

1. Power from the mainshaft 3rd gear drives the countershaft 3rd gear. Since there is no hydraulic pressure to the 3rd clutch, the countershaft 3rd gear turns freely and drives the secondary shaft 3rd gear.

2. Power is also transmitted to the secondary shaft 2nd gear because hydraulic pressure is applied to the 2nd clutch.

3. The secondary shaft 2nd gear drives the countershaft 2nd gear. Power is transmitted to the final drive gear and drives the final driven gear.

NOTE: Hydraulic pressure is also applied to the 1st clutch, but since the rotation speed of 2nd gear exceeds 1st gear speed, power from 1st gear is cut off at the one-way clutch.

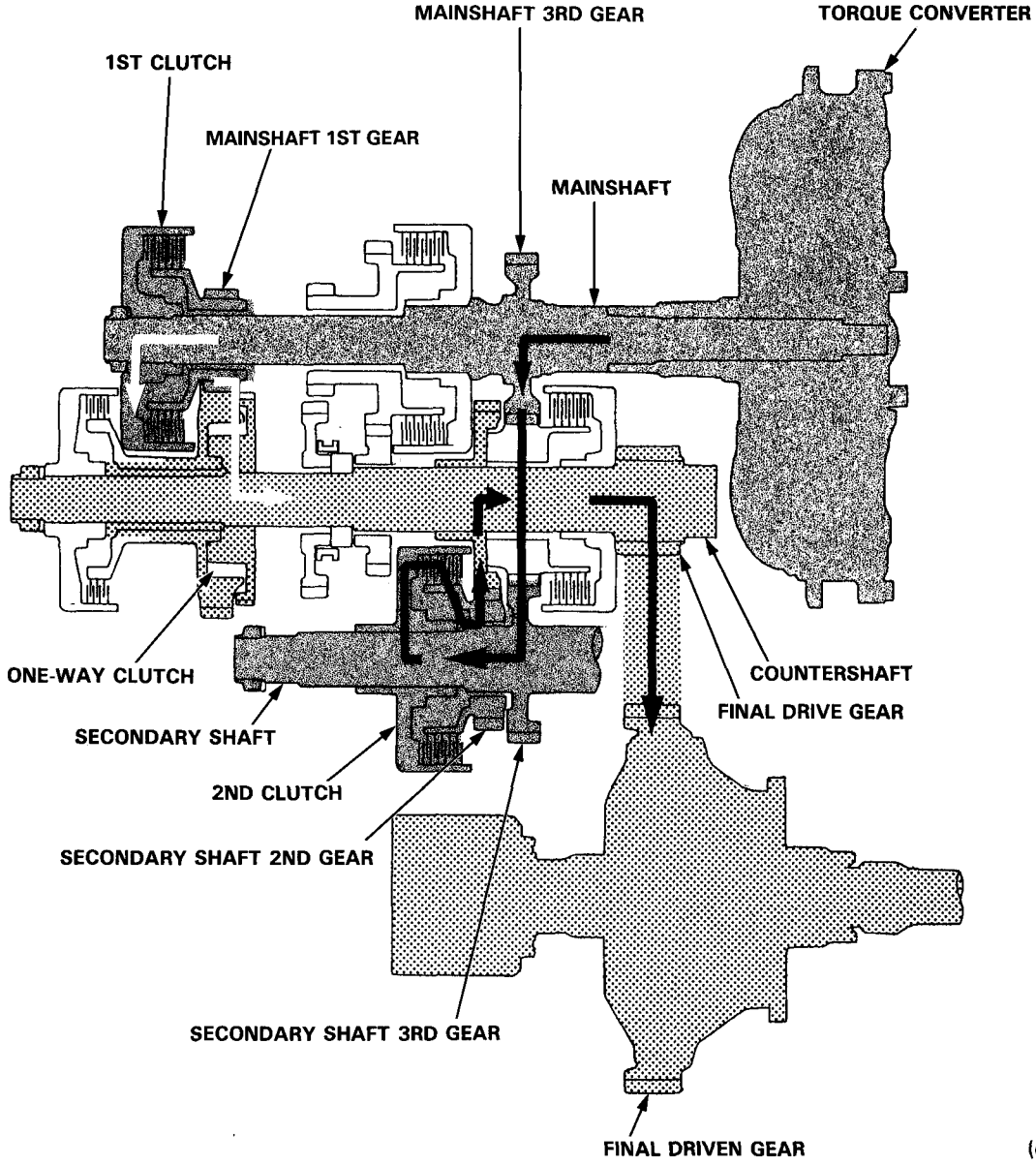

(cont'd)

Power Flow (cont'd)

3rd Gear in 3/M and D Positions

1. Hydraulic pressure is applied to the 3rd clutch. Power from the mainshaft 3rd is transmitted to the countershaft 3rd gear.
2. Power is transmitted to the final drive gear and drives the final driven gear.

NOTE: Hydraulic pressure is also applied to the 1st clutch, but since the rotation speed of the 3rd gear exceeds 1st gear speed, power from 1st gear is cut off at the one-way clutch.

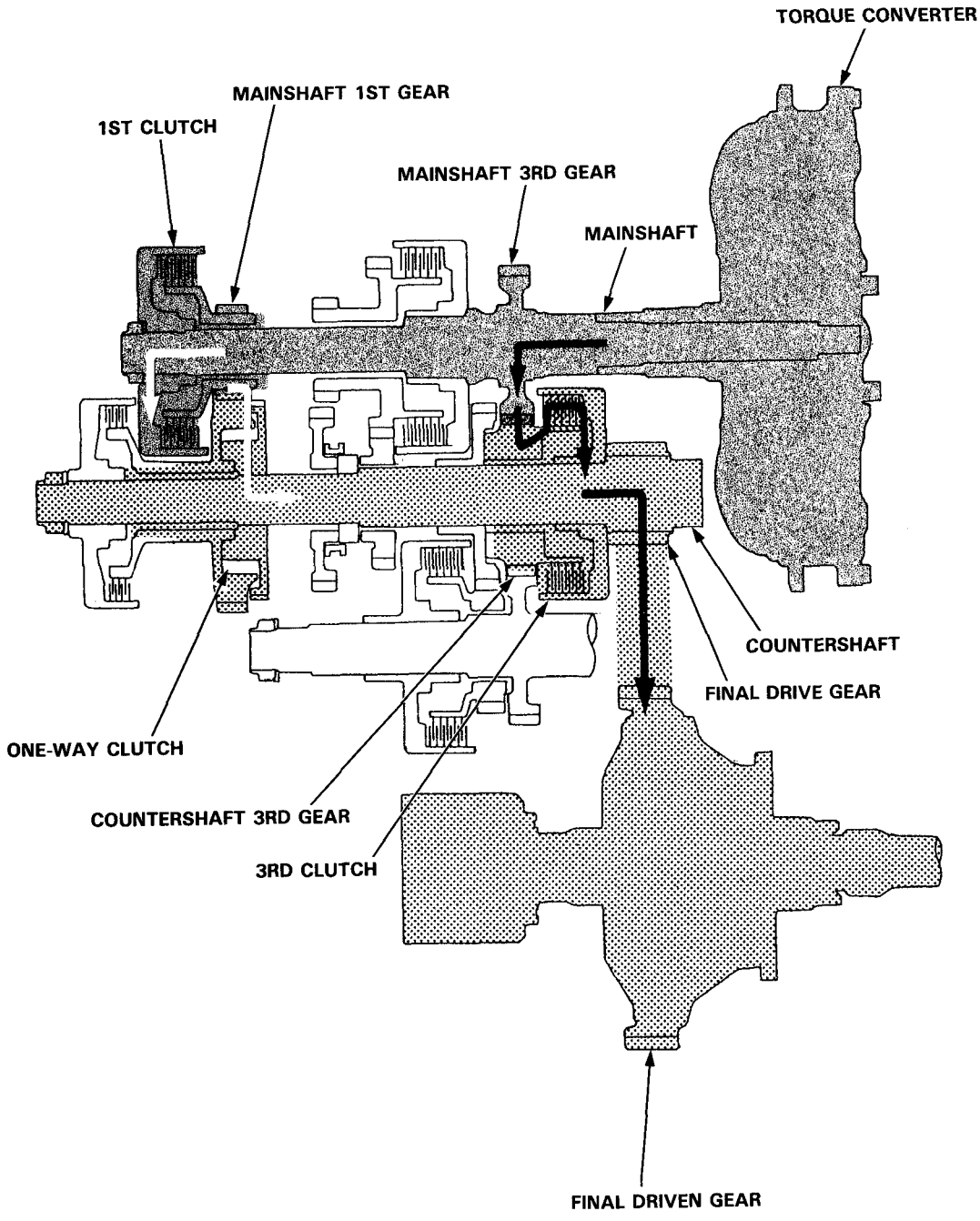

4th Gear in 3/M and D Positions

1. Hydraulic pressure is applied to the 4th clutch, which rotates together with the mainshaft, and the mainshaft 4th gear.
2. Power is transmitted through countershaft 4th gear to the countershaft.
3. Power is transmitted to the final drive gear and drives the final driven gear.

NOTE: Hydraulic pressure is also applied to the 1st clutch, but since the rotation speed of 4th gear exceeds 1st gear speed, power from 1st gear is cut off at the one-way clutch.

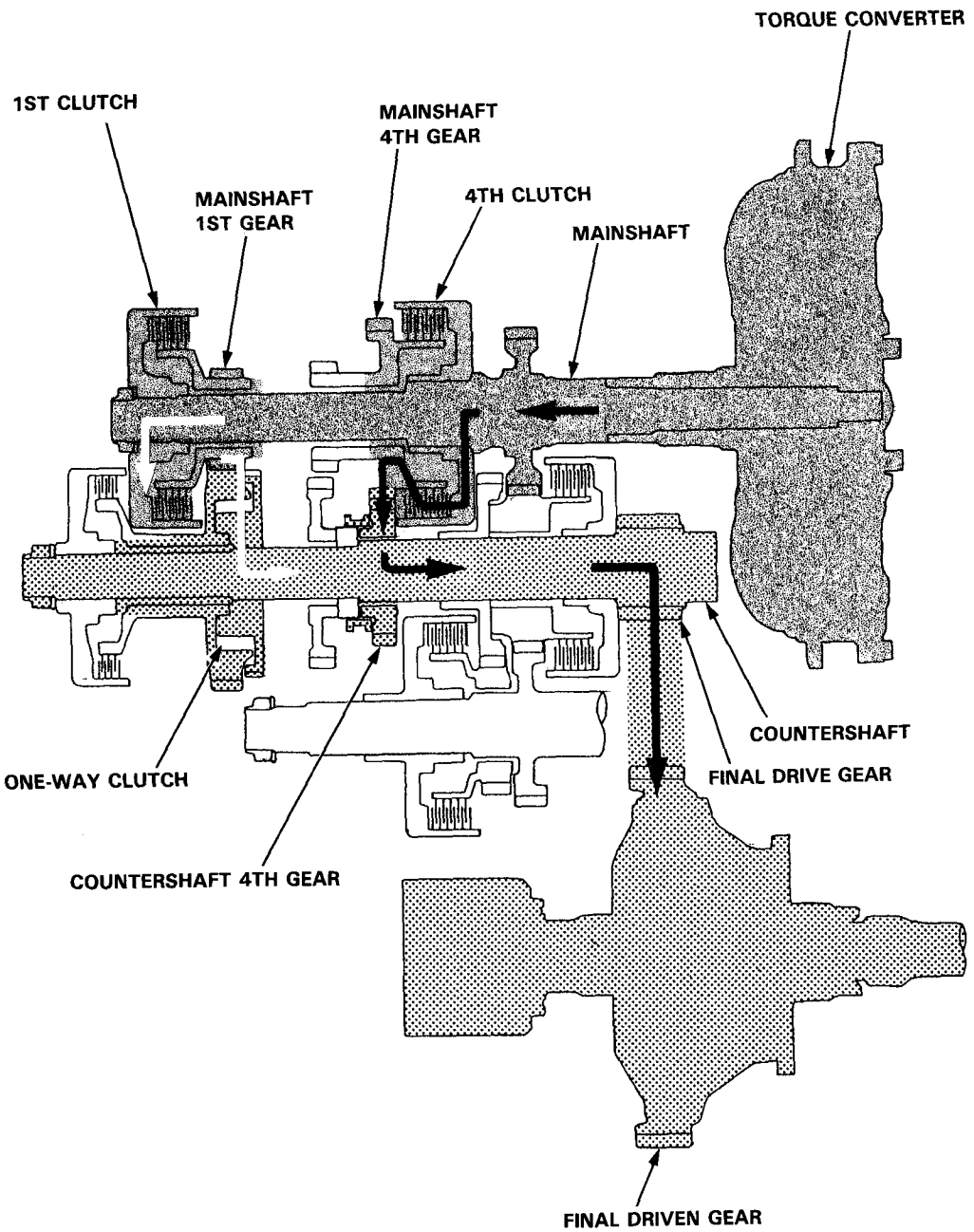

Description

Electronic Control System

The electronic control system consists of the Transmission Control Module (TCM), sensors, a linear solenoid and four solenoid valves. Shifting and lock-up are electronically controlled for comfortable driving under all conditions. The TCM is located on the insulator center bulkhead, behind the driver's seat.

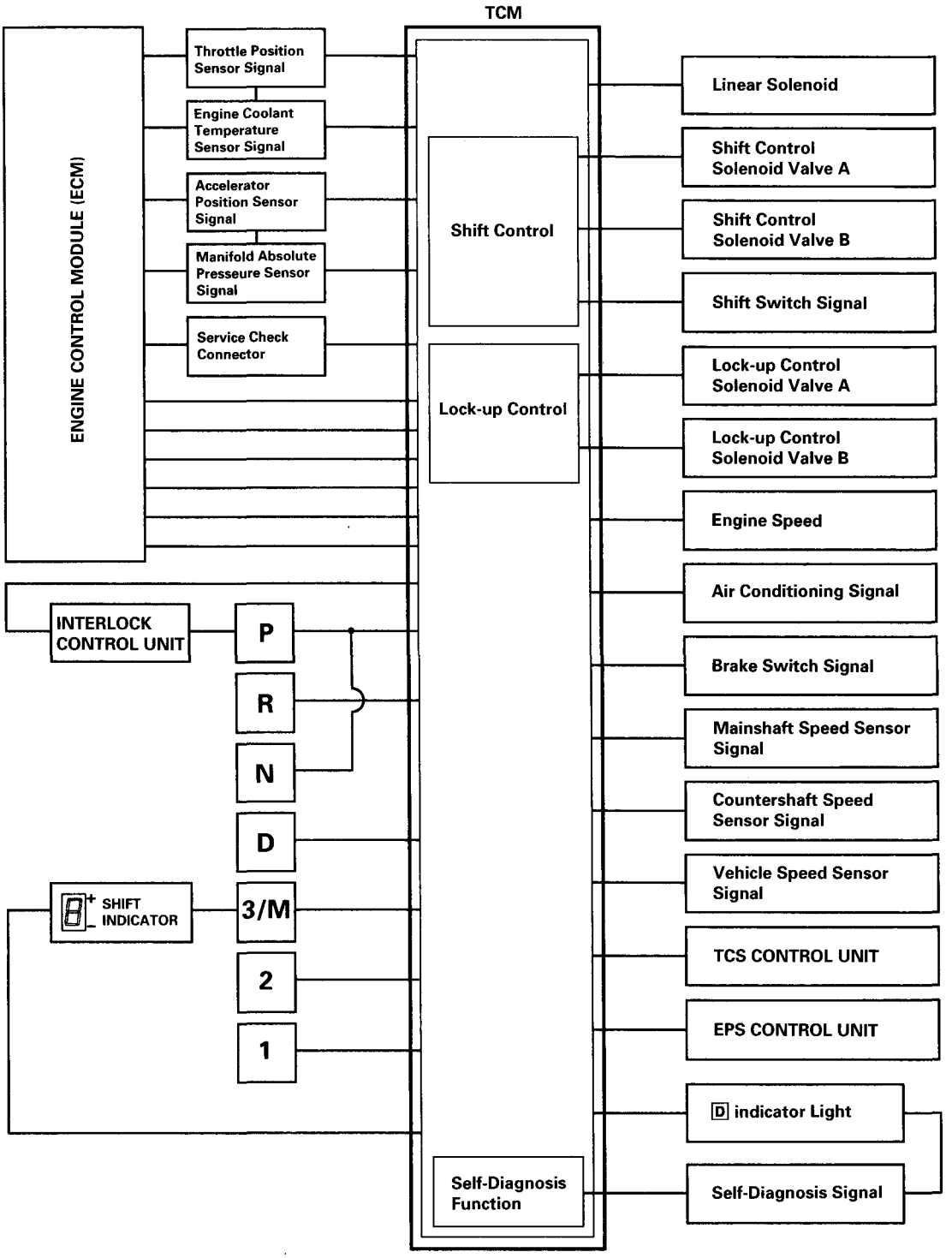

ShiftControl

Engine torque controls shifting through the linear solenoid. The linear solenoid is controlled by the TCM, and it is used to operate the throttle valve.
The TCM instantly determines which gear to select by various signals sent from sensors, and actuates shift control solenoid valves A and B to control shifting. Also, Sport Shifting mode has been adopted to shift gears up and down manually in [3/M] position, while using the shift switch on the steering column's right pod.

The combination of driving signals to shift control solenoid valves A and B is shown in the table below.

Position	Gear	Shift control solenoid valve	
		A	B
[D] [3/M]	1st	OFF	ON
	2nd	ON	ON
	3rd	ON	OFF
	4th	OFF	OFF
[2]	2nd	OFF	OFF
[1]	1st	ON	OFF
[R]	Reverse	ON	OFF

Sport Shifting (Manual Shifting) mode

In [3/M] position, the driver can use the shift switch on the steering column's right pod to shift gears up and down, much like a manual transmission.

- Pushing up on the shift switch: Transmission upshifts to the next higher gear.
- Pushing down on the shift switch: Transmission downshifts.

The number of the selected gear is displayed in the shift indicator next to the [M] indicator.

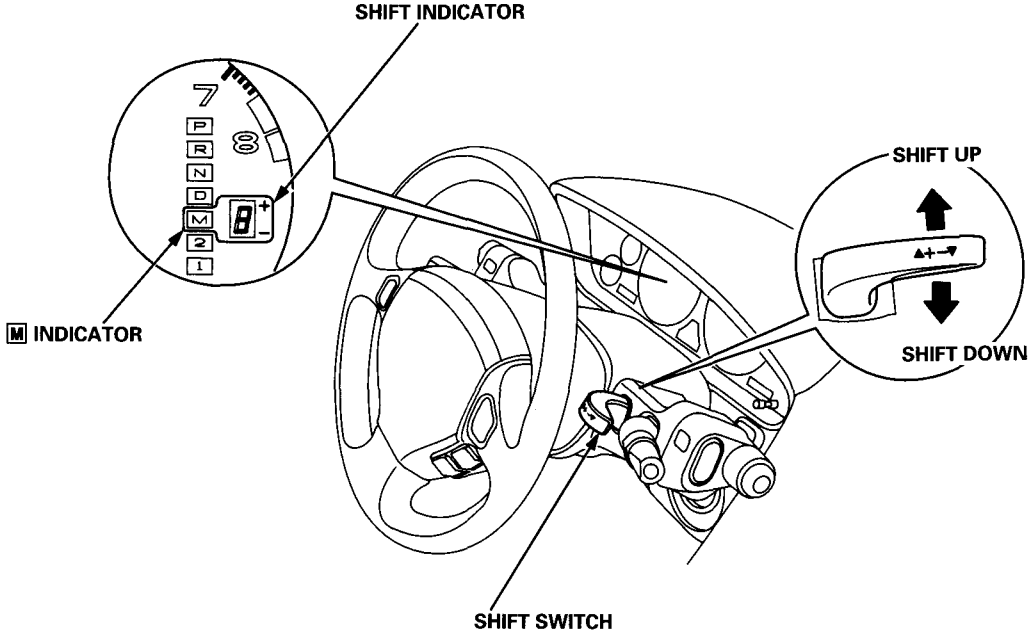

(cont'd)

Electronic Control System (cont'd)

- Automatic shifting control in Sport Shifting mode

This position also has automatic shifting areas:
- 1-2 upshift
- 4-3 downshift, 3-1 downshift, 2-1 downshift

depending on vehicle speed. To prevent engine over-revving, the transmission has a 1-2 automatic upshift speed, and 4-3, 3-1, 2-1 downshift allowable speeds.

- When the vehicle reaches the 1-2 automatic upshift speed, the TCM outputs the 1-2 upshift signal to the transmission and the transmission upshifts to 2nd from 1st gear.

- When the vehicle is coasting over the 4-3 downshift allowable speed and 3-2 downshift allowable speed, the TCM does not input the downshift signal from the shift switch, and the transmission does not downshift.

- When the vehicle is coasting over the 2-1 downshift allowable speed in 2nd gear, the TCM inputs the signal to wait until it reaches the 2-1 downshift allowable speed, then the shift indicator blinks to indicate it is waiting to downshift to 1st.

When the vehicle decelerates to a stop, the transmission shifts to 1st gear automatically.

The transmission can be shifted to 2nd gear by pushing the shift switch up while the vehicle is stopped. This allows the vehicle to start off in 2nd gear.

Lock-up Control

From sensor input signals, the TCM determines whether to turn the lock-up ON or OFF, and activates lock-up control solenoid valve A and/or B accordingly.

The lock-up control mechanism comes into operation in 2nd, 3rd, and 4th, in [D] and [3/M] positions.

The combination of driving signals to lock-up control solenoid valves A and B is shown in the table below.

Lock-up condition	Lock-up control solenoid valve	
	A	B
Lock-up OFF	OFF	OFF
Lock-up, slight	ON	OFF
Lock-up, half	ON	ON
Lock-up, full	ON	ON
Lock-up during deceleration	ON	OFF ⇔ ON Duty operation

Description

Hydraulic Control

The valve bodies include the main valve body, the regulator valve body, the lock-up valve body, the secondary valve body, the servo body, the throttle valve body and the 2nd accumulator body.
The ATF pump is driven by splines on the left end of the torque converter which is attached to the engine. Fluid flows through the regulator valve to maintain specified pressure through the main valve body to the manual valve directing pressure to each of the clutches.
The shift control solenoid valve assembly, the lock-up control solenoid valve assembly and the linear solenoid are bolted on the outside of the transmission.

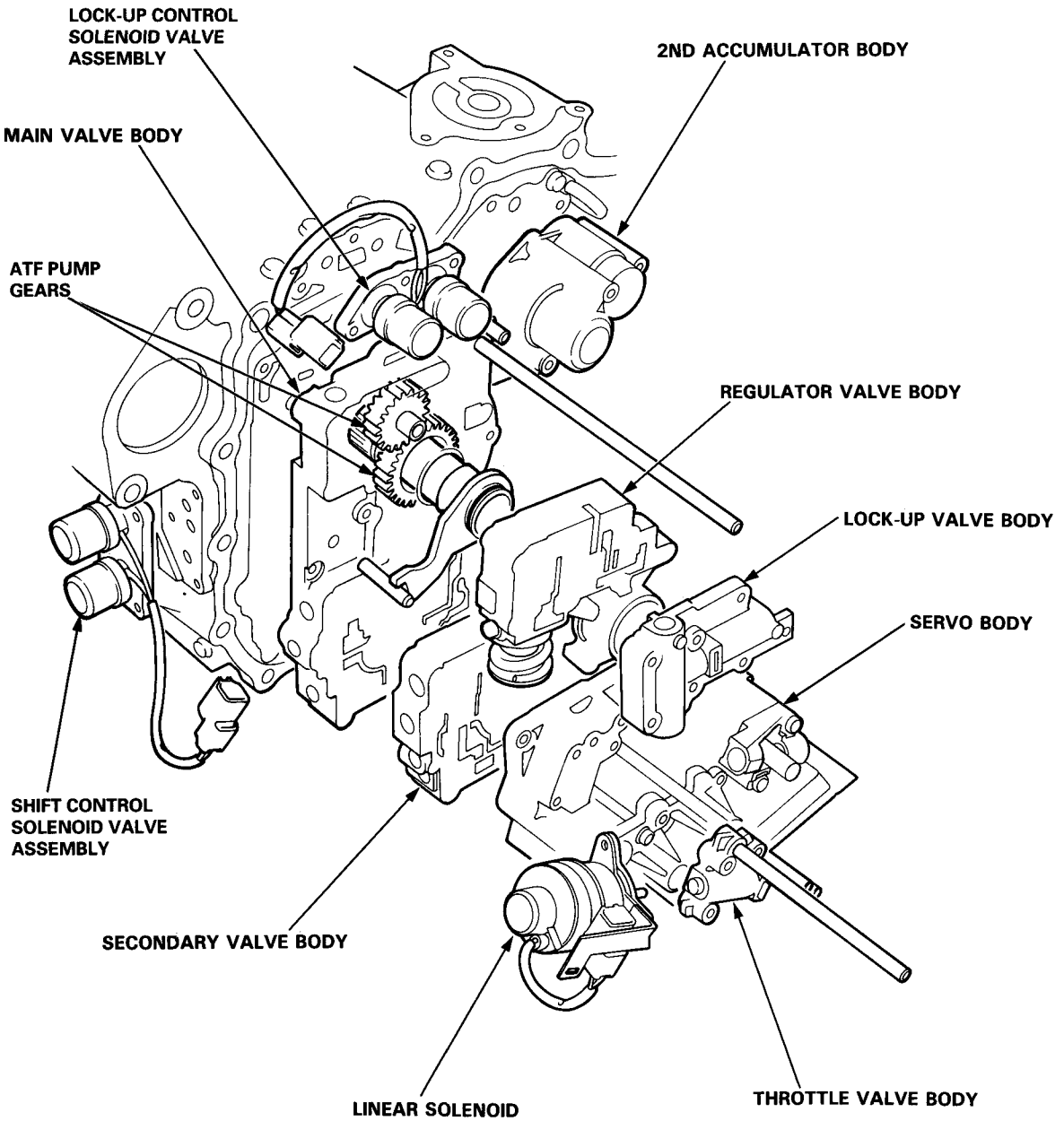

Throttle Valve Body
The throttle valve body is mounted on the servo valve body with the throttle valve built in.

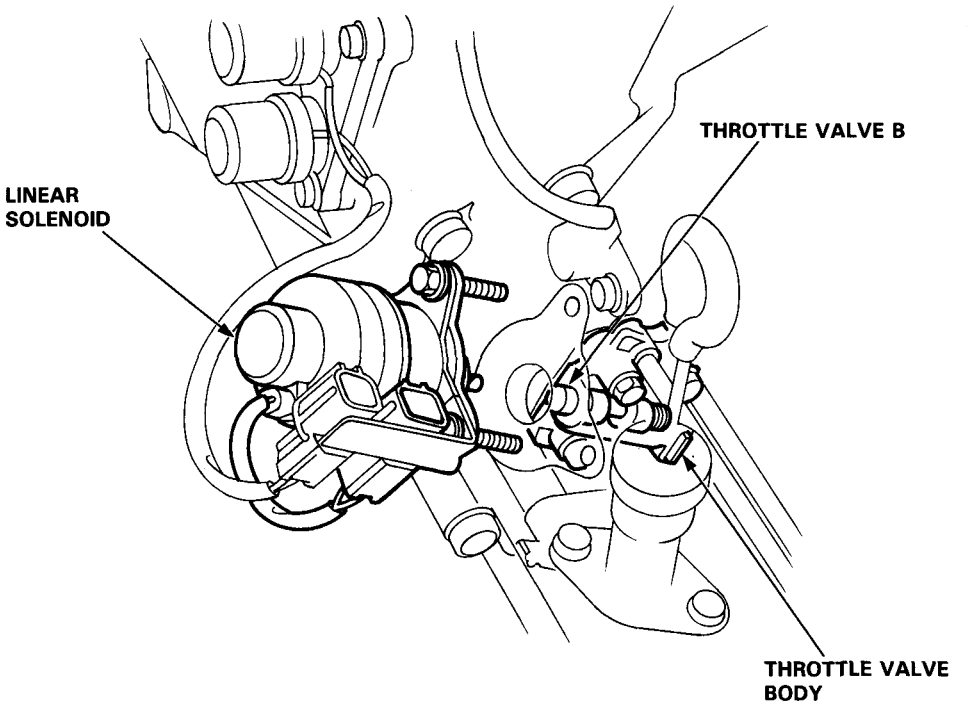

Throttle Valve B, Linear Solenoid
Throttle valve B converts changes in the throttle opening to changes in transmission hydraulic pressure, to determine transmission shift quality and lock-up operation. The throttle valve B also operates on accumulator back pressure to make smooth changes from one gear to another.
The end of the valve contacts the linear solenoid which is controlled by the TCM.
The throttle pedal load has been reduced by eliminating the cable.

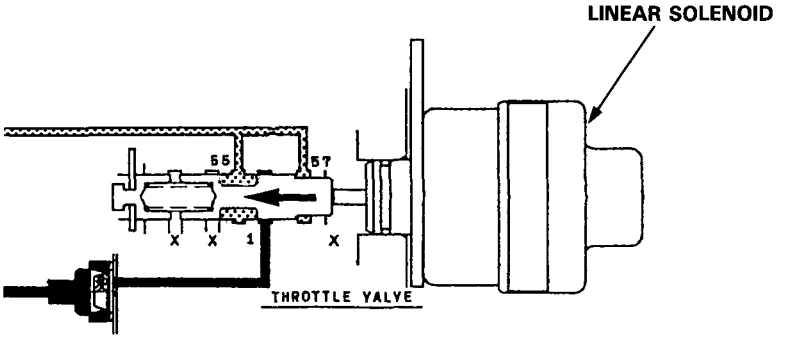

(cont'd)

Description

Hydraulic Control (cont'd)

Regulator Valve Body

The regulator valve body is mounted on the main valve body with the regulator valve, the lock-up control valve and the cooler relief valve built in. The stator shaft arm contacts the regulator valve spring cap.

The hydraulic pressure (line pressure) is controlled by the regulator valve.

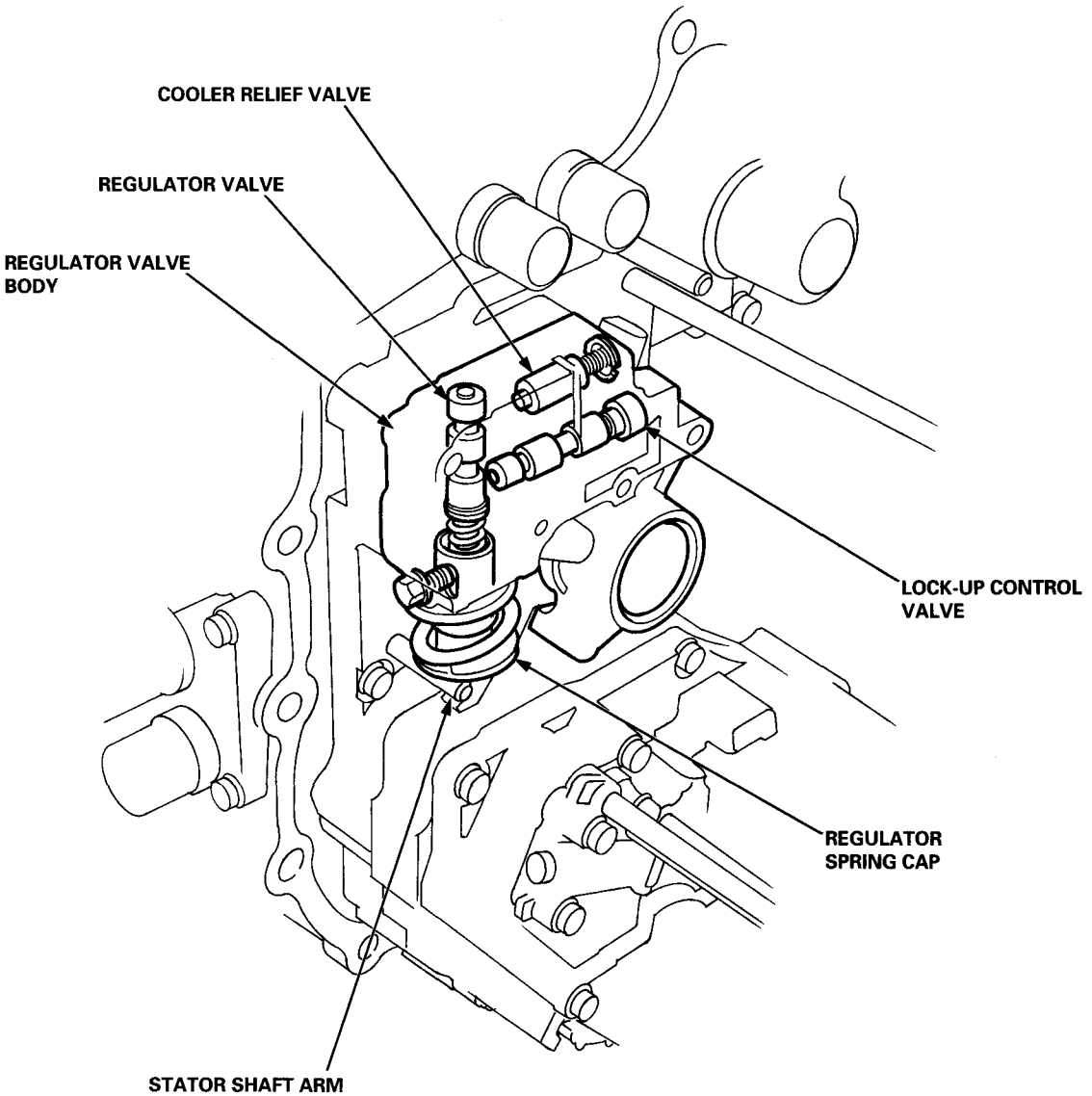

Regulator Valve

The regulator valve maintains a constant hydraulic pressure from the ATF pump to the hydraulic control system, while also furnishing fluid to the lubricating system and the torque converter.

Fluid from the ATF pump flows through B and B'. The regulator valve has a valve orifice. The fluid entering from B flows through the orifice to the A cavity. This pressure of the A cavity pushes the regulator valve to the right side, and this movement of the regulator valve uncovers the fluid port to the torque converter and the relief valve. The fluid flows out to the torque converter. The relief valve and regulator valve move to the left side.

According to the level of the hydraulic pressure through B, the position of the regulator valve changes, and the amount of fluid from B' through D and C also changes. This operation is continued, maintaining line pressure.

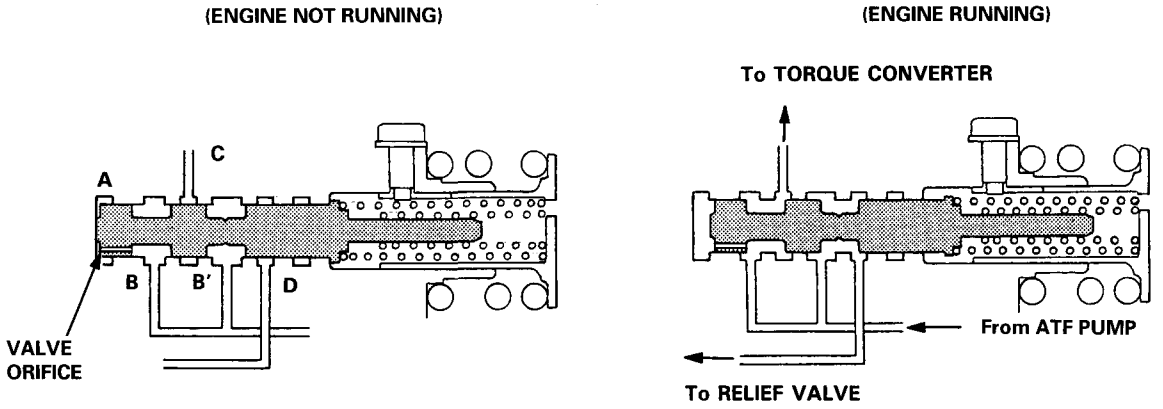

Stator Reaction Hydraulic Pressure Control

Hydraulic pressure increases according to torque are performed by the regulator valve using stator torque reaction. The stator shaft is splined with the stator in the torque converter, and its arm end contacts the regulator spring cap. When the vehicle is accelerating or climbing (Torque Converter Range), stator torque reaction acts on the stator shaft, and the stator arm pushes the regulator spring cap in the → direction in proportion to the reaction. The stator reaction spring compresses, and the regulator valve moves to increase the line pressure which is regulated by the regulator valve. Line pressure reaches its maximum when stator torque reaction reaches its maximum.

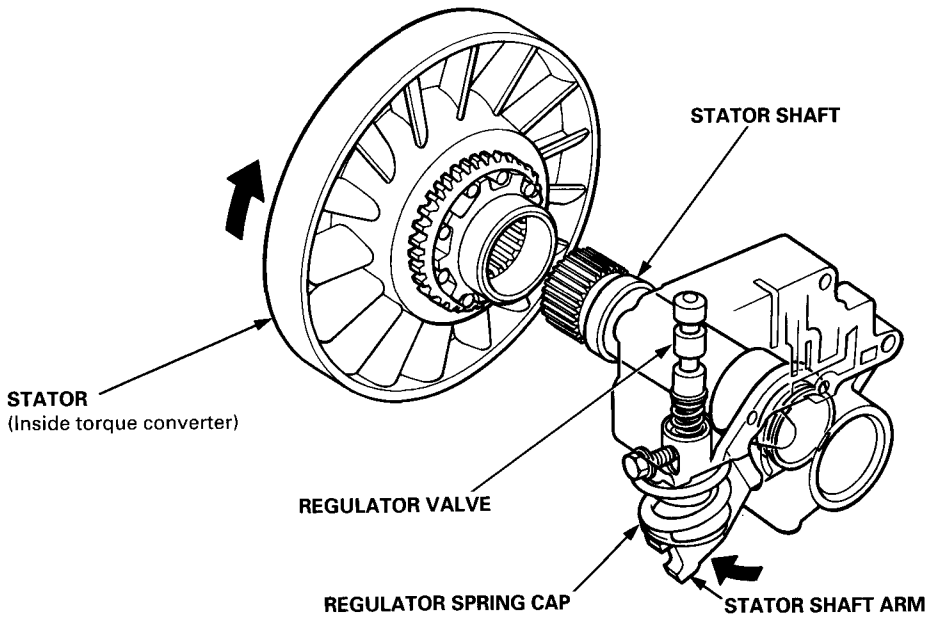

(cont'd)

Description

Hydraulic Control (cont'd)

Main Valve Body

The main valve body is located on the torque converter housing. The main valve body houses the ATF pump gears, the torque converter check valve, the manual valve, the 1-2, 2-3, 3-4 shift valves, the relief valve and the one-way relief valve.

The primary functions of the main valve body are to switch on and off, and to control the hydraulic pressure going to the hydraulic control system.

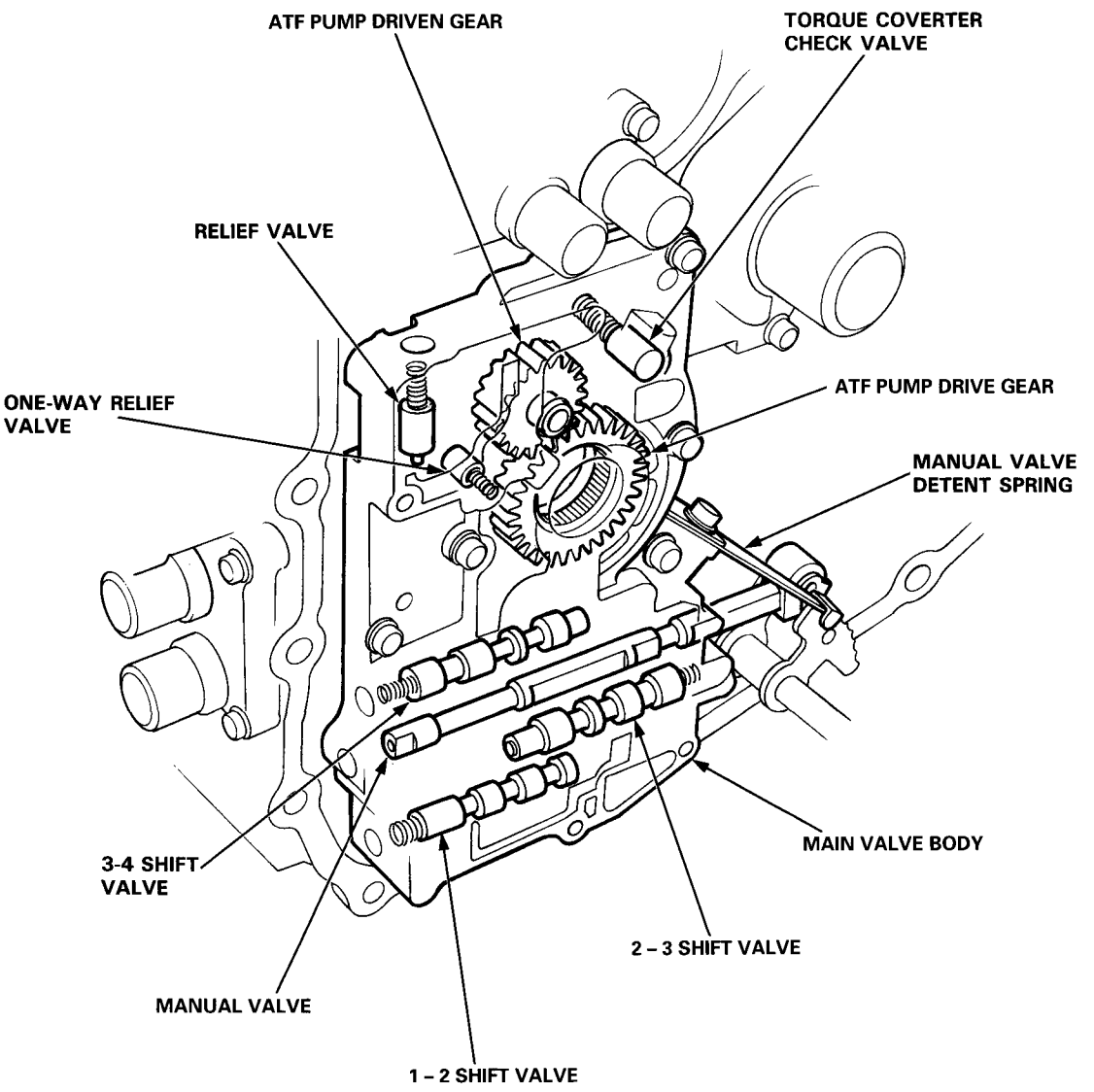

ATF Pump
The external tooth gear type ATF pump consists of a housing together with the main valve body, a pump drive gear, a pump driven gear, and a pump shaft. The ATF pump is installed on the torque converter housing. The pump's driving force is transmitted by the torque converter pump (directly connected to the engine) to the pump shaft. The intake and exhaust lines, and the torque converter line are incorporated in the housing.

One-way Relief Valve
The one-way relief valve is used during high speed or high temperature to send fluid to the ATF cooler for ATF cooling.

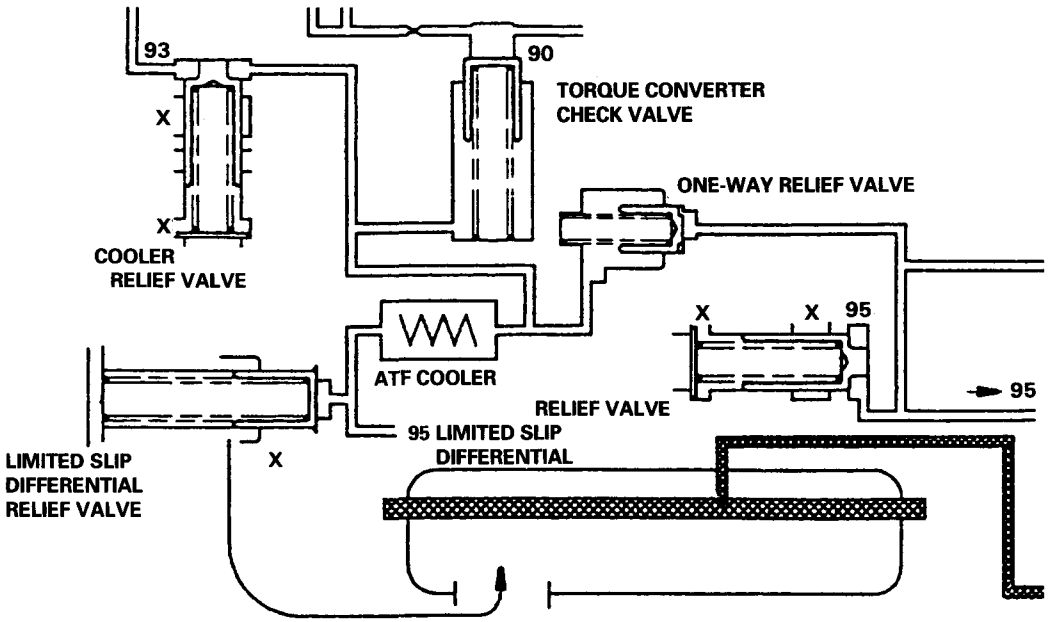

(cont'd)

Description

Hydraulic Control (cont'd)

Secondary Valve Body

The secondary valve body is also mounted on the main valve body with the 3-2 kick-down valve, the CPC valve, the 2nd orifice control valve, the 3rd orifice control valve, the modulator valve, the 4th exhaust valve, the 2nd exhaust valve, the servo control valve and the 4-3 kick-down valve built in.

Primarily, it regulates shift valve operation timing and clutch pressure for shock reduction during shifting.

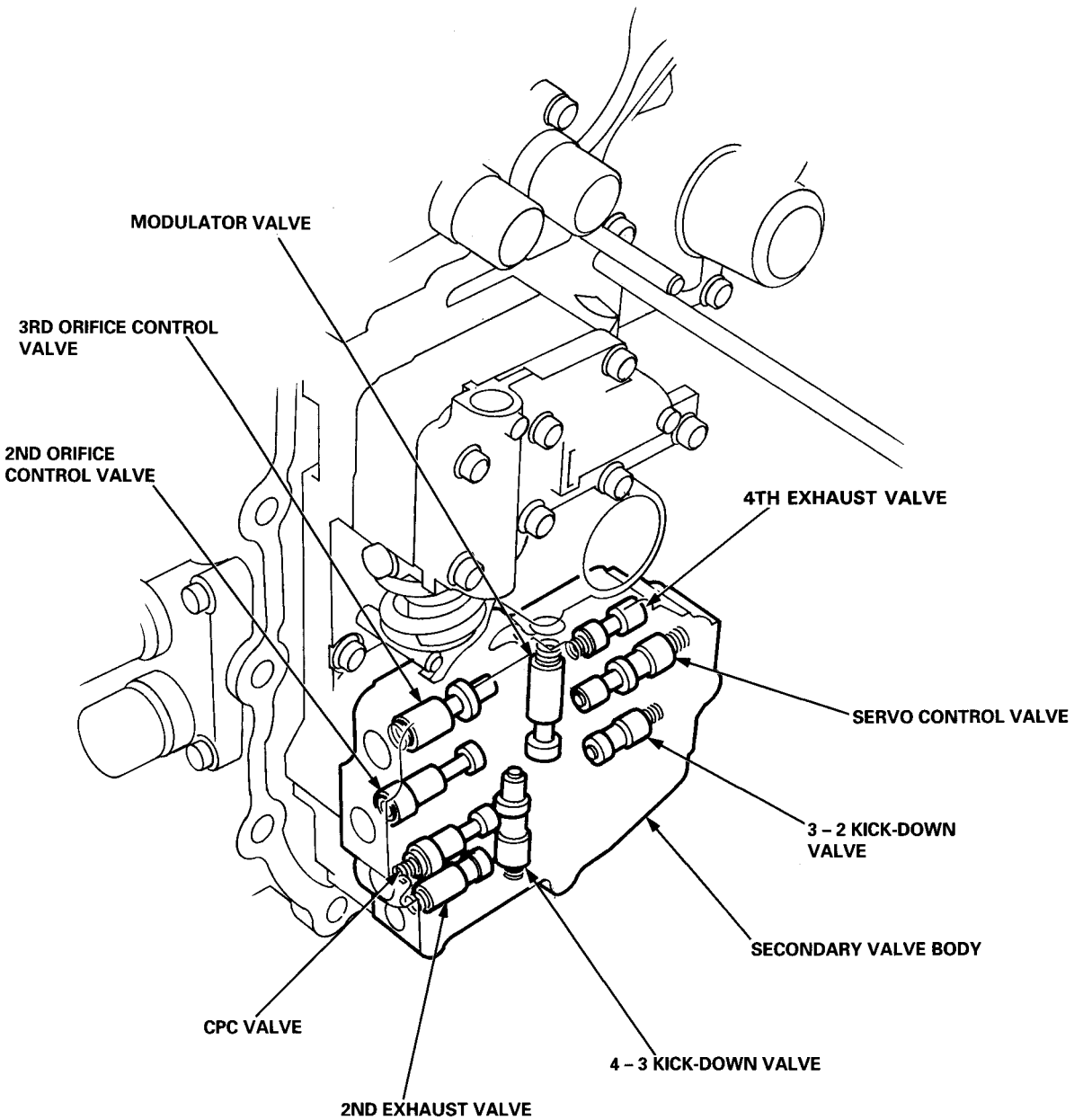

Modulator Valve
The modulator valve uses line pressure from the regulator (to shift control solenoid valves A/B) and the lock-up control solenoid valves A/B, to maintain accurate shift and lock-up characteristics.

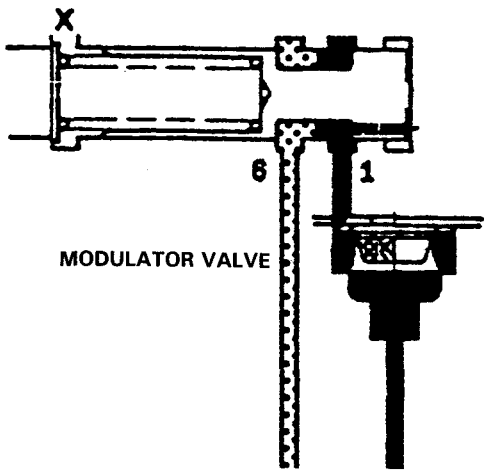

2nd Orifice Control Valve
For smooth shifting between the 2nd and 3rd gear, the open pressure on the 2nd gear side is relieved through a fixed orifice. The valve also moves to equalize pressure differences between the 2nd and 3rd gear.

2nd Exhaust Valve
The 2nd exhaust valve releases 2nd clutch pressure quickly when shifting from the range where hydraulic pressure is applied to the 2nd clutch in the [N] position.

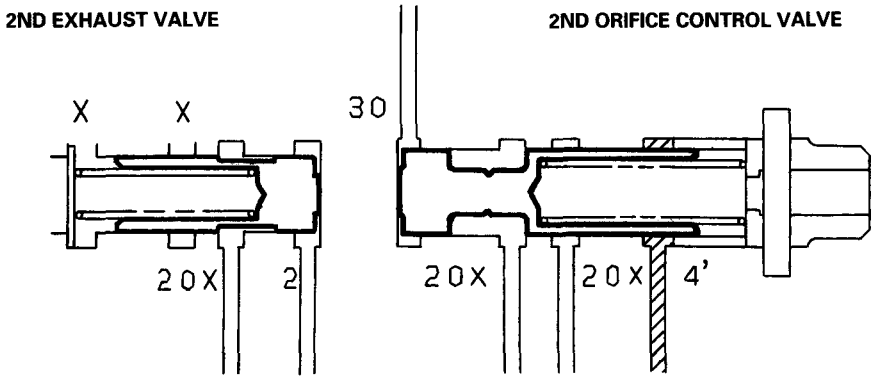

(cont'd)

Description

Hydraulic Control (cont'd)

Servo Body
The servo body is mounted on the secondary valve body with the servo valve, the 1st accumulator piston, the 3rd accumulator piston, and the 4th accumulator piston built in to it. The primary functions of the servo body are to switch the direction foward and reverse, and to control hydraulic pressure reduction for shifting shock.

2nd Accumulator Body
The 2nd accumulator body is mounted on the torque converter housing with the 1st-hold accumulator, the 2nd accumulator and the limited slip differential relief valve built in to it.

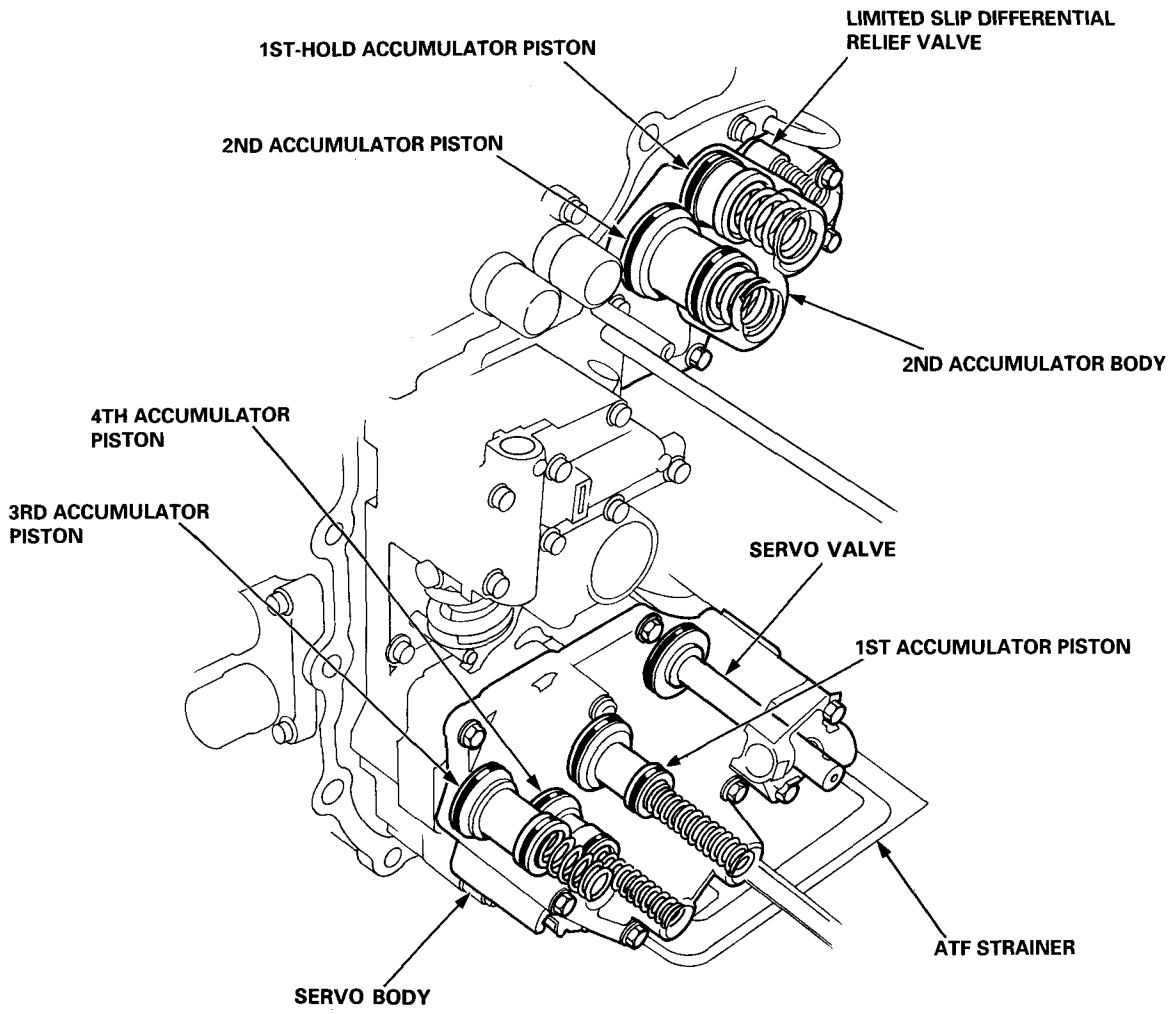

Limited Slip Differential Relief Valve
When the resistance of fluid flow inside the limited slip differential is high, the limited slip differential relief valve is opened, and fluid flows to the ATF cooler.

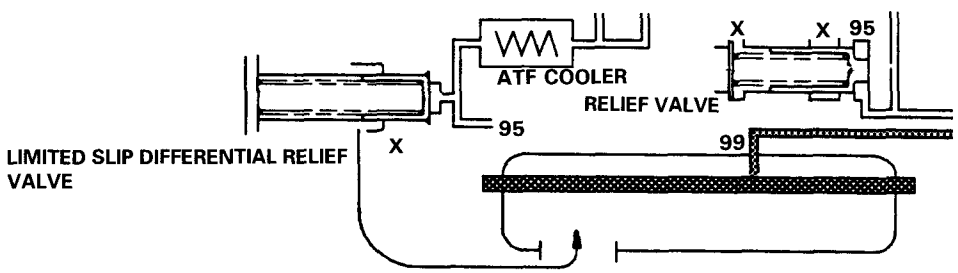

Lock-up Valve Body

The lock-up valve body is mounted on the regulator valve body with the lock-up shift valve and the lock-up timing B valve built in.

The capacity of the lock-up clutch is controlled by the lock-up shift valve and the lock-up timing B valve.

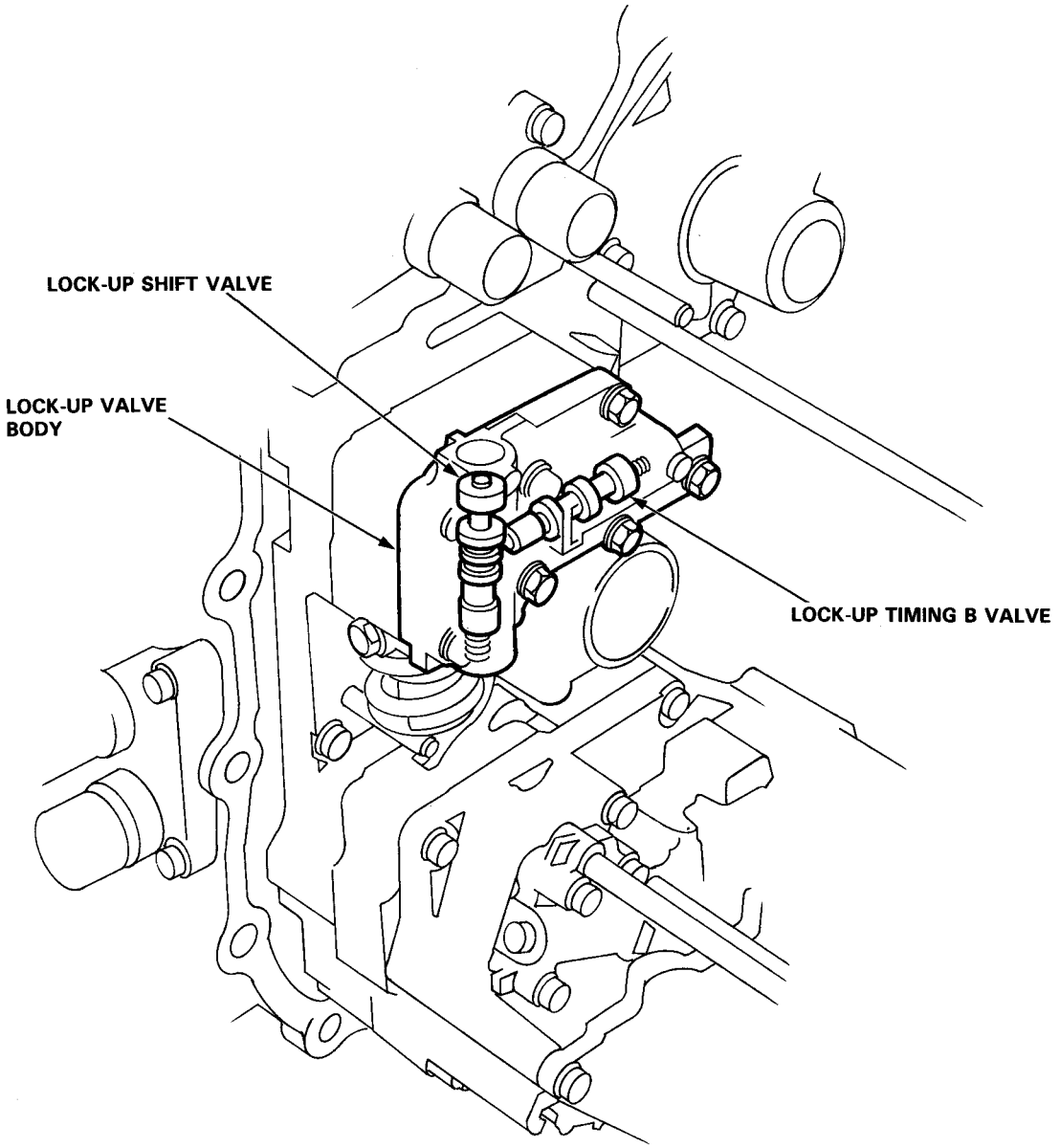

Description

Hydraulic Flow

General Chart of Hydraulic Pressure

ATF Pump — Regulator Valve — Line Pressure — Modulator Pressure
Throttle Pressure
Clutch Pressure
Torque Converter Pressure
Lubrication Pressure

Distribution of Hydraulic Pressure

- Regulator Valve — Torque Converter Pressure, Lubrication Pressure, To regulate Line Pressure
- Manual Valve — To select Line Pressure — Clutch Pressure
- Modulator Valve — Modulator Pressure — Shift Control Solenoid Valves, Lock-up Control Solenoid Valves
- 1-2 Shift Valve, 2-3 Shift Valve, 3-4 Shift Valve — Clutch Pressure
- Throttle Valve — Throttle B Pressure

NO.	DESCRIPTION OF PRESSURE	NO.	DESCRIPTION OF PRESSURE	NO.	DESCRIPTION OF PRESSURE
1	LINE	10	1ST CLUTCH	90	TORQUE CONVERTER
2	LINE	15	1ST-HOLD CLUTCH	91	TORQUE CONVERTER
3	LINE	16	1ST-HOLD CLUTCH	92	TORQUE CONVERTER
3'	LINE	18	LINE	93	ATF COOLER
3"	LINE	20	2ND CLUTCH	94	TORQUE CONVERTER
4	LINE	21	2ND CLUTCH	95	LUBRICATION
4'	CLUTCH PRESSURE CONTROL	25	LINE	96	TORQUE CONVERTER
5	CLUTCH PRESSURE CONTROL	30	3RD CLUTCH	97	TORQUE CONVERTER
6	MODULATOR	31	3RD CLUTCH	99	SUCTION
6A	MODULATOR (SHIFT SOL. V A)	40	4TH CLUTCH	X	BLEED
6B	MODULATOR (SHIFT SOL. V B)	41	4TH CLUTCH		
6C	MODULATOR (L/C SOL. V A)	55	THROTTLE B		
6D	MODULATOR (L/C SOL. V B)	56	THROTTLE B		
9	LINE	57	THROTTLE B		

N position

As the engine turns, the ATF pump also starts to operate. The ATF is drawn from (99) and discharged into (1). Then, ATF flowing from the ATF pump becomes the line pressure (1). The line pressure (1) is regulated by the regulator valve. The torque converter inlet pressure (92) enters (94) of torque converter through the orifice and discharges into (90).

The torque converter check valve prevents the torque converter pressure from rising.

Under this condition, the hydraulic pressure is not applied to the clutches.

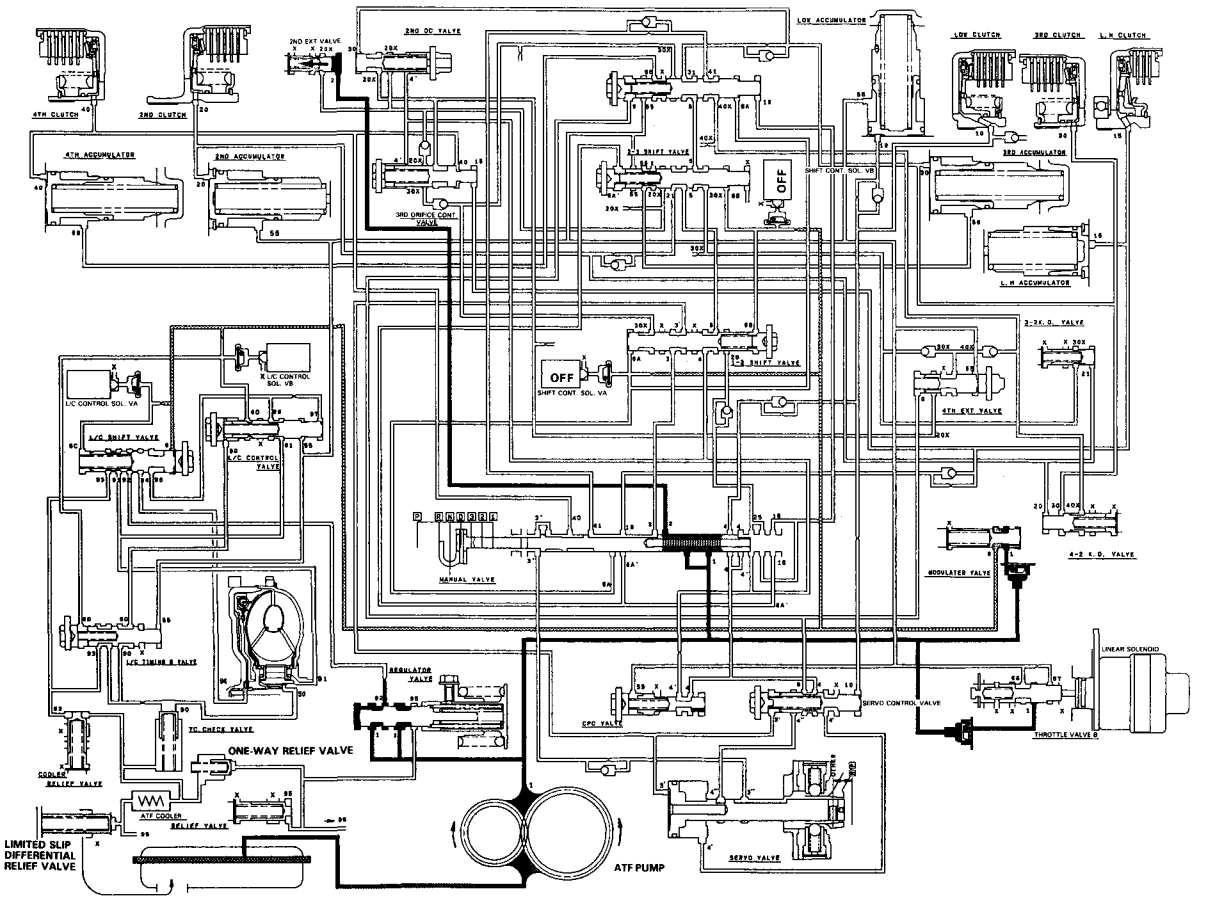

(cont'd)

Description

Hydraulic Flow (cont'd)

1 Position

Line pressure (1) becomes line pressure (4), (18), and (25) as it passes through the manual valve. Also, line pressure (1) goes to the modulator valve through the filter and becomes modulator pressure (6). Modulator pressure (6) is supplied to the 1-2 shift valve and 2-3 shift valve.

The 1-2 shift and 2-3 shift valves are moved to the left side because the shift control solenoid valve A is turned ON and B is OFF by the TCM.

The line pressure (18) is supplied to the 3-4 shift valve, and moves the valve to the left side. Line pressure (4) becomes 1st clutch pressure (10), and the 1st clutch is engaged.

Line pressure (4) becomes 1st-hold clutch pressure (16) via the 1-2 shift valve, 2-3 shift valve, 3-4 shift valve, and manual valve, and the 1st-hold clutch is engaged.

NOTE: When used, "left" or "right" indicates direction on the hydraulic circuit.

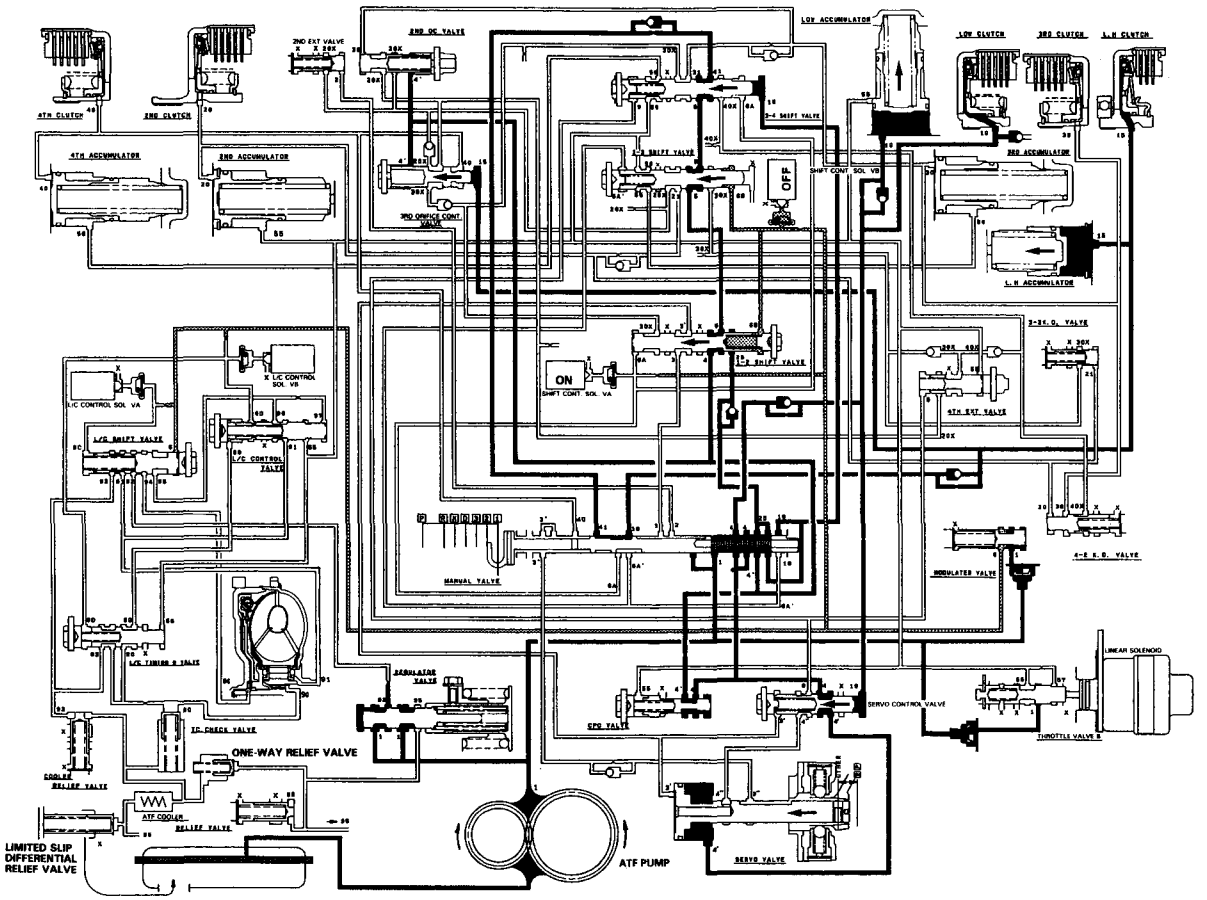

2 Position

Line pressure (1) becomes the line pressure (4), (25) as it passes through the manual valve.
Line pressure (1) goes to the modulator valve and becomes the modulator pressure (6). The modulator pressure (6) is supplied to the 1-2 shift valve and 3-4 shift valve. The 1-2 shift and 3-4 shift valves are moved to the left side, and the 2-3 shift valve is moved to the right side, because the shift control solenoid valve A and B are turned OFF by the TCM.
Line pressure (4) goes through the 2nd clutch pressure (20) to the 2nd clutch, then the 2nd clutch is engaged.
Line pressure (4) passing through the orifice becomes the 1st clutch pressure (10) and flows to the 1st clutch. However no power is transmitted by means of the one-way clutch.

NOTE: When used, "left" or "right" indicates direction on the hydraulic circuit.

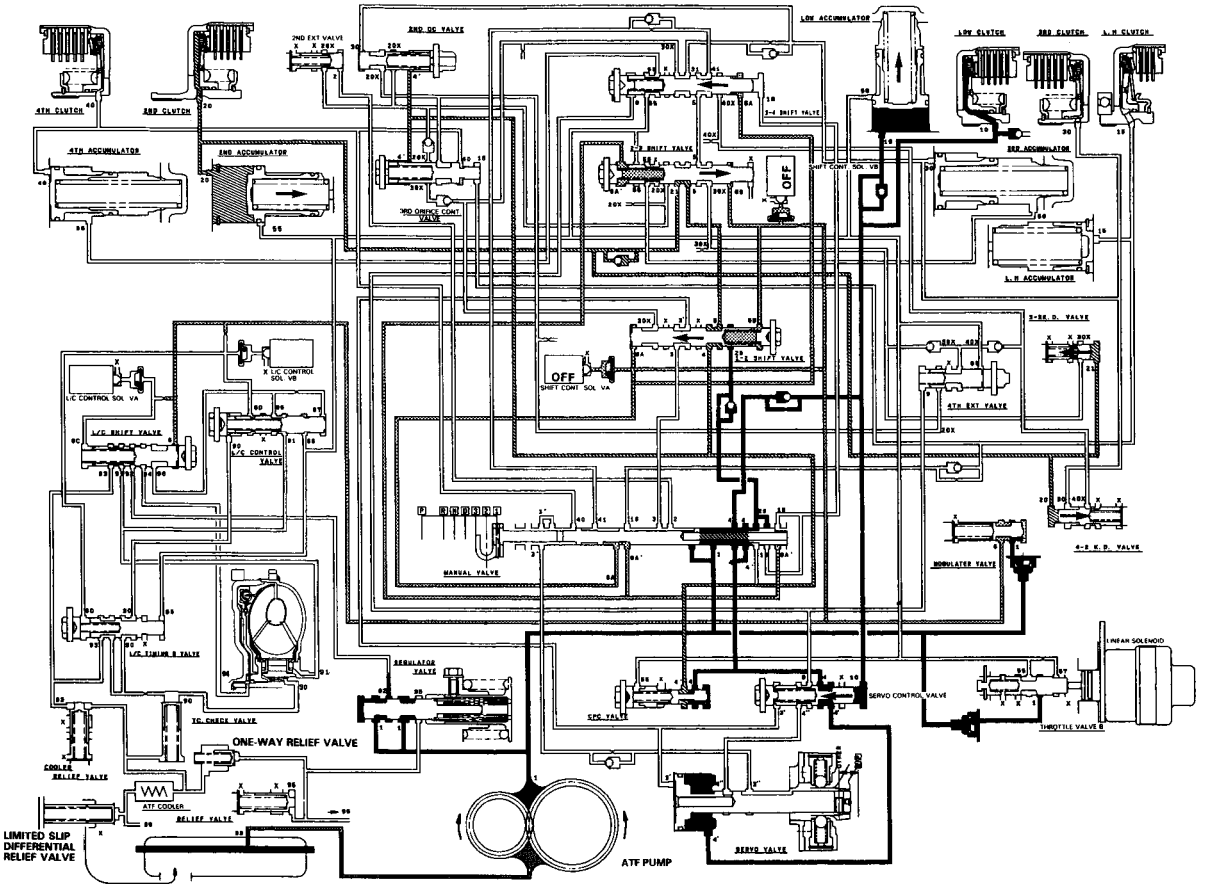

(cont'd)

Description

Hydraulic Flow (cont'd)

3/M and D Positions

1. 1st Gear

The flow of fluid through the torque converter circuit is the same as in N position.
Line pressure (1) becomes line pressure (4) and 1st clutch pressure (10).
The 1st clutch pressure is applied to the 1st clutch and 1st accumulator, and the vehicle will move as engine power is transmitted.
Line pressure (1) becomes modulator pressure (6) by the modulator valve and travels to each shift valve.
The 1-2 shift valve is moved to the right side because the shift control solenoid valve A is turned OFF and B is turned ON by the TCM.
Line pressure (1) also flows to the throttle valve.

NOTE: When used, "left" or "right" indicates direction on the hydraulic circuit.

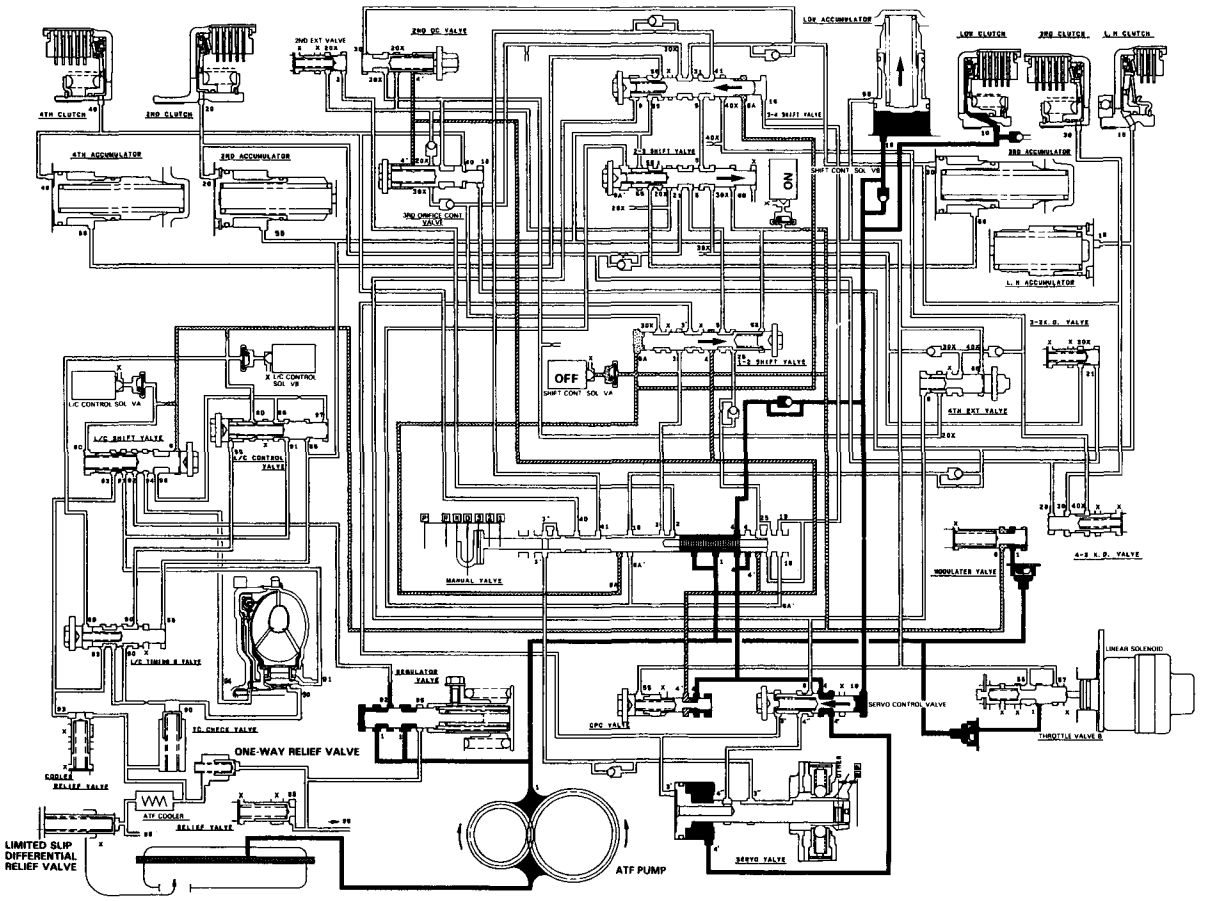

2. 2nd Gear

The flow of fluid to the 1-2 and 2-3 shift valves is the same as in 1st gear. As the speed of the vehicle reaches the prescribed value, solenoid valve A is turned ON by the TCM. As a result, the 1-2 shift valve is moved to the left side and uncovers the port leading to the 2nd clutch, and the 2nd clutch is engaged.

Fluid flows by way of:

— Line Pressure (4) → CPC Valve — Clutch Pressure Control (4') → 1-2 Shift Valve — Clutch Pressure Control (5) → 2-3 Shift Valve — 2nd Clutch Pressure (21) → Orifice — 2nd Clutch Pressure (20) → 2nd Clutch

Hydraulic pressure also flows to the 1st clutch. However no power is transmitted through of the one-way clutch.

NOTE: When used, "left" or "right" indicates direction on the hydraulic circuit.

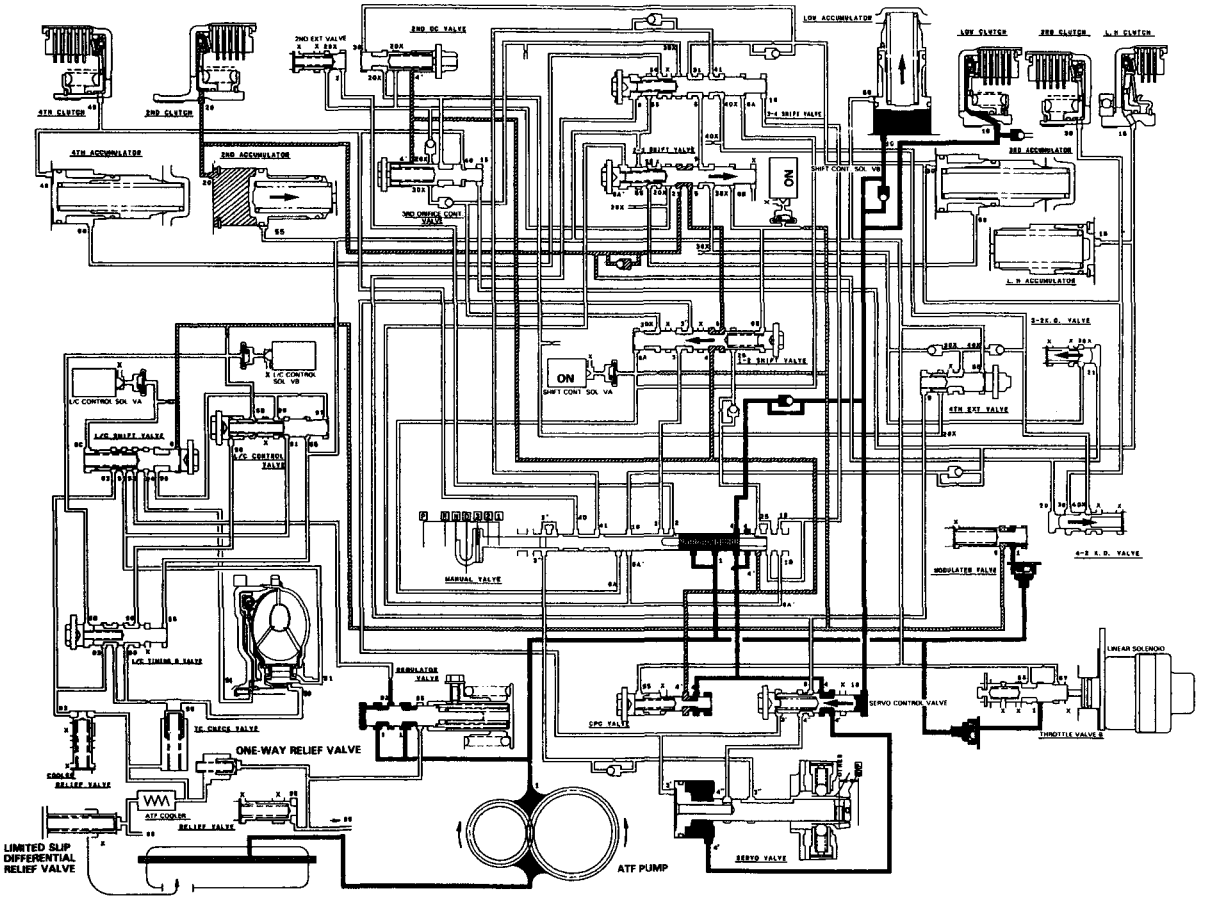

(cont'd)

Description

Hydraulic Flow (cont'd)

3. 3rd Gear

The flow of fluid to the 1-2, 2-3, and 3-4 shift valves is the same as in 2nd gear. As the speed of the vehicle reaches the prescribed value, shift control solenoid valve B is turned OFF (Shift control solenoid valve A remains ON). The 2-3 shift valve is then moved to the left side, uncovering the fluid port leading to the 3rd clutch. Since the 3-4 shift valve is moved to the right side to cover the fluid port to the 4th clutch, the 3rd clutch is engaged.

Fluid flows by way of:

— Line Pressure (4) → CPC Valve — Clutch Pressure Control (4') → 1-2 Shift Valve — Clutch Pressure Control (5) → 2-3 Shift Valve — Clutch Pressure Control (5) → 3-4 Shift Valve — 3rd Clutch Pressure (31) → 3rd Clutch

Hydraulic pressure also flows to the 1st clutch. However no power is transmitted through of the one-way clutch as in 2nd gear.

NOTE: When used, "left" or "right" indicates direction on the hydraulic circuit.

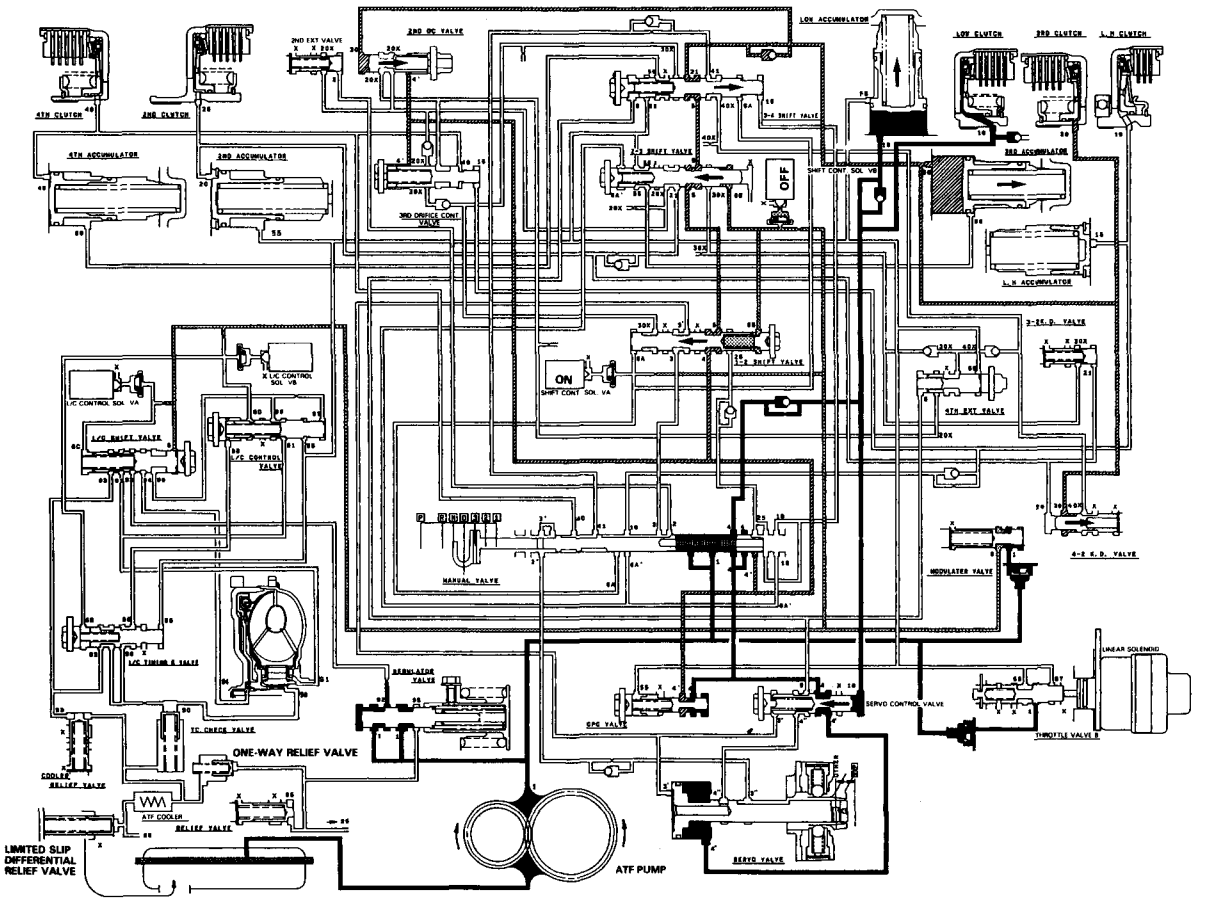

4. 4th Gear

The flow of fluid to the 1-2, 2-3, and 3-4 shift valves is the same as in 3rd gear. When the speed of the vehicle reaches the prescribed valve, shift control solenoid valve A is turned OFF (Shift control solenoid valve B remains OFF). As this takes place, the 3-4 shift valve is moved to the left side and uncovers the fluid port leading to the 4th clutch. Since the 1-2 and 2-3 shift valves are kept on the left side, the fluid flows through the 4th clutch, and power is transmitted through the 4th clutch.

Fluid flows by way of:

— Line Pressure (4) → CPC Valve — Clutch Pressure Control (4') → 1-2 Shift Valve — Clutch Pressure Control (5) → 2-3 Shift Valve — Clutch Pressure Control (5) → 3-4 Shift Valve — 4th Clutch Pressure (41) → Manual Valve — 4th Clutch Pressure (40) → 4th Clutch

Hydraulic pressure also flows to the 1st clutch. However no power is transmitted through of the one-way clutch as in 2nd and 3rd gear.

NOTE: When used, "left" or "right" indicates direction on the hydraulic circuit.

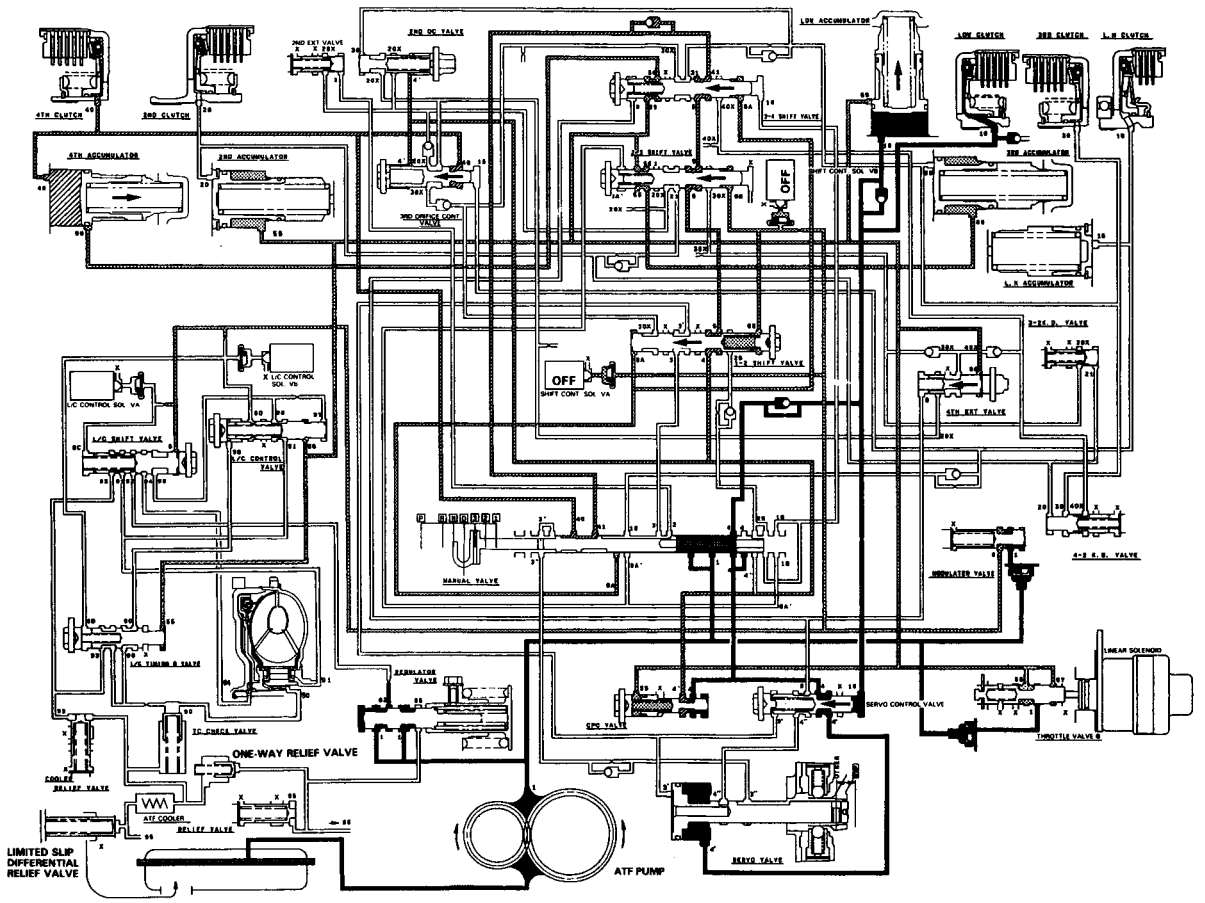

(cont'd)

Description

Hydraulic Flow (cont'd)

R Position

The flow of fluid through the torque converter circuit is the same as in the N position. Fluid (1) from the ATF pump flows through the manual valve and becomes line pressure (3). It then flows through the 1-2 shift valve to the servo valve (3), moving the shift fork shaft to the reverse position.

Under this condition, shift control solenoid valve A is turned ON and valve B is turned OFF as in 3rd gear. As a result, the 1-2 shift valve moves to the left side. Fluid (3') flows through the servo valve and the manual valve to the 4th clutch, and power is transmitted through the 4th clutch.

Reverse Inhibitor Control

When the R position is selected while the vehicle is moving forward at a speed over 6 mph (10 km/h), the TCM outputs 1st signal (A: OFF, B: ON), and the 1-2 shift valve is moved to the right side. Line pressure (3) is intercepted by the 1-2 shift valve, and power is not transmitted since the 4th clutch and the servo valve are not operating.

NOTE: When used, "left" or "right" indicates direction on the hydraulic circuit.

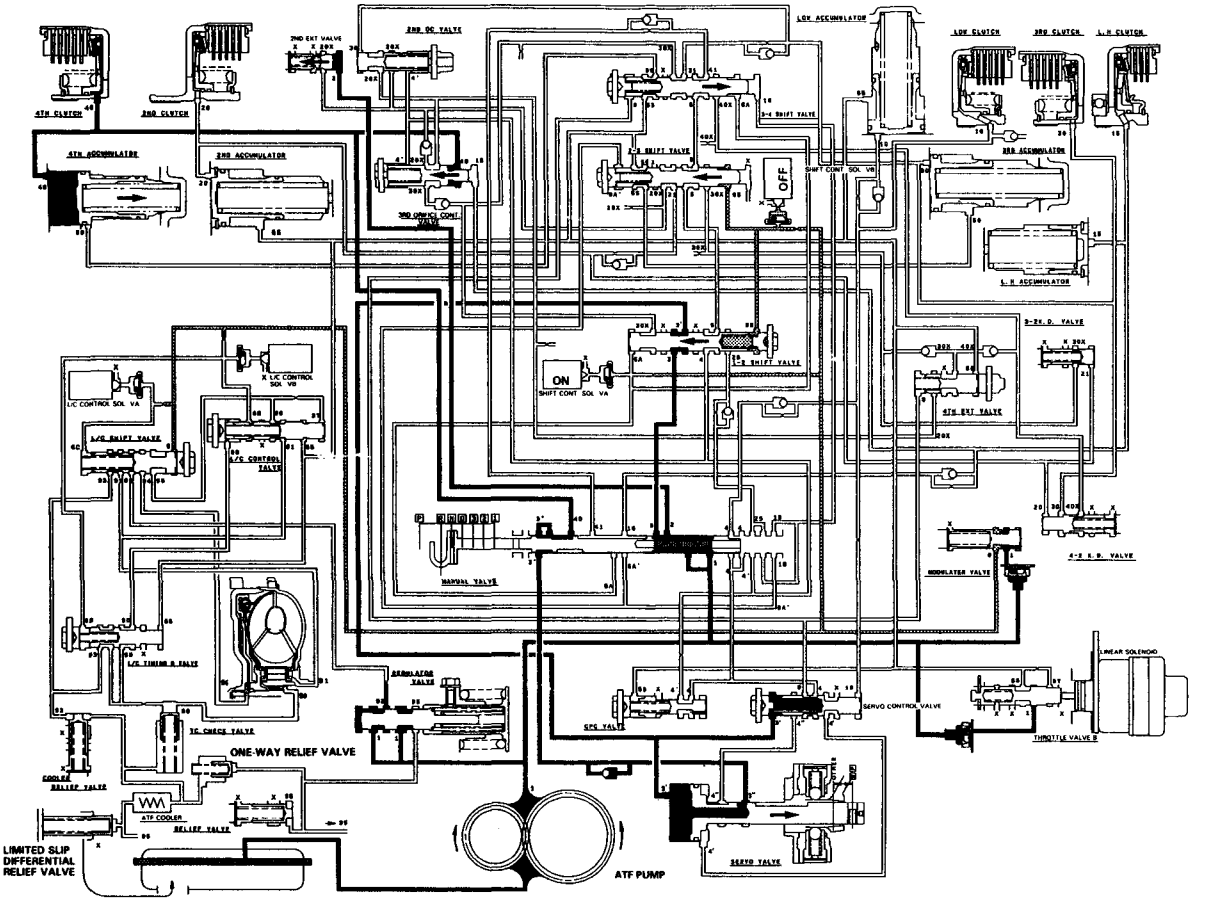

P Position

The flow of fluid through the torque converter circuit is the same as in N position.

Line pressure (1) becomes line pressure (3) as it passes through the manual valve. Line pressure (3) flows through the 1-2 shift valve, to the servo valve, and to the servo control valve, moving the shift fork to the reverse position as in the R position.

Hydraulic pressure is not supplied to the clutches, and power is not transmitted.

NOTE: When used, "left" or "right" indicates direction on the hydraulic circuit.

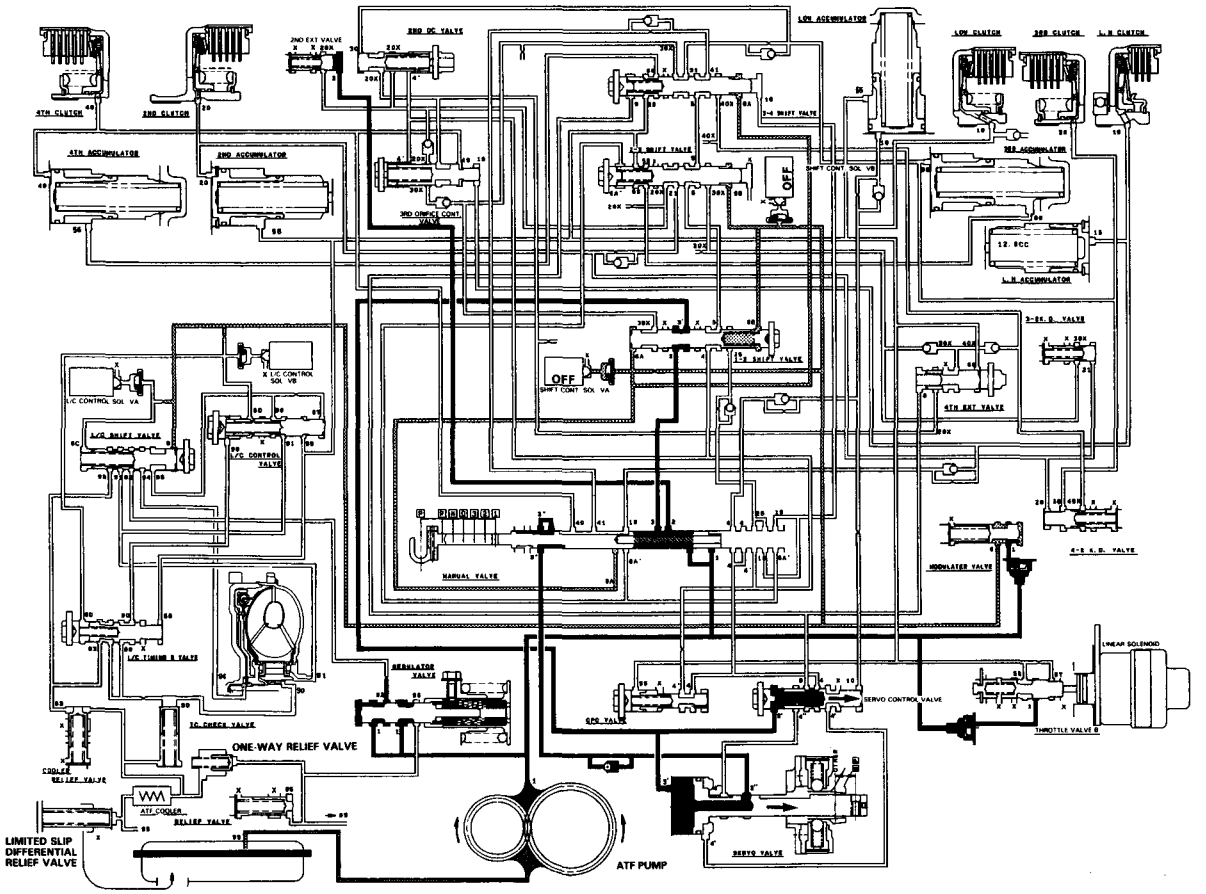

Description

Lock-up System

Lock-up Clutch

1. Operation (clutch on)

With the lock-up clutch on, fluid in the chamber between the converter cover and lock-up piston is discharged, and the converter fluid exerts pressure through the piston against the converter cover. As a result, the converter turbine is locked on the converter cover firmly. This bypasses the converter, placing the vehicle in direct drive.

Power flow

The power flows by way of:

Engine
↓
Drive plate
↓
Torque converter cover
↓
Lock-up piston
↓
Damper spring
↓
Turbine
↓
Mainshaft

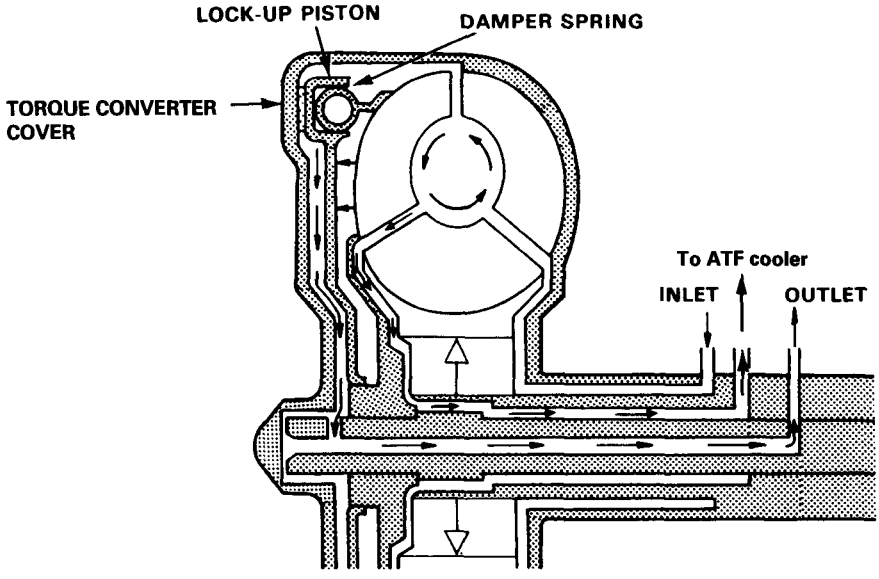

2. Operation (clutch off)

With the lock-up clutch off, fluid flows in the reverse of CLUTCH ON. As a result, the lock-up piston moves away from the converter cover, and the torque converter lock-up is released.

Power flow

Engine
↓
Drive plate
↓
Torque converter cover
↓
Pump
↓
Turbine
↓
Mainshaft

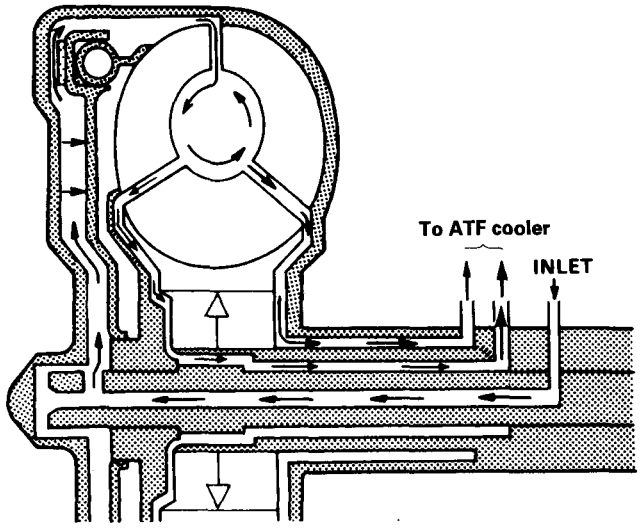

In 3/M position and D position (2nd, 3rd, and 4th gear), pressurized fluid is drained from the back of the torque converter through a passage, causing the lock-up piston to be held against the torque converter cover. As this takes place, the mainshaft rotates at the same speed as the engine crankshaft. Together with hydraulic control, the TCM optimizes the timing of the lock-up system. Under certain conditions, the lock-up operation is applied during deceleration, in 3/M position in (2nd, 3rd, and 4th gear), and in D position (3rd and 4th gears).

The lock-up shift valve controls the range of lock-up according to lock-up control solenoid valves A and B, and throttle valve B. When lock-up control solenoid valves A and B activate, modulator pressure changes. Lock-up control solenoid valves A and B are mounted on the torque converter housing, and are controlled by the TCM.

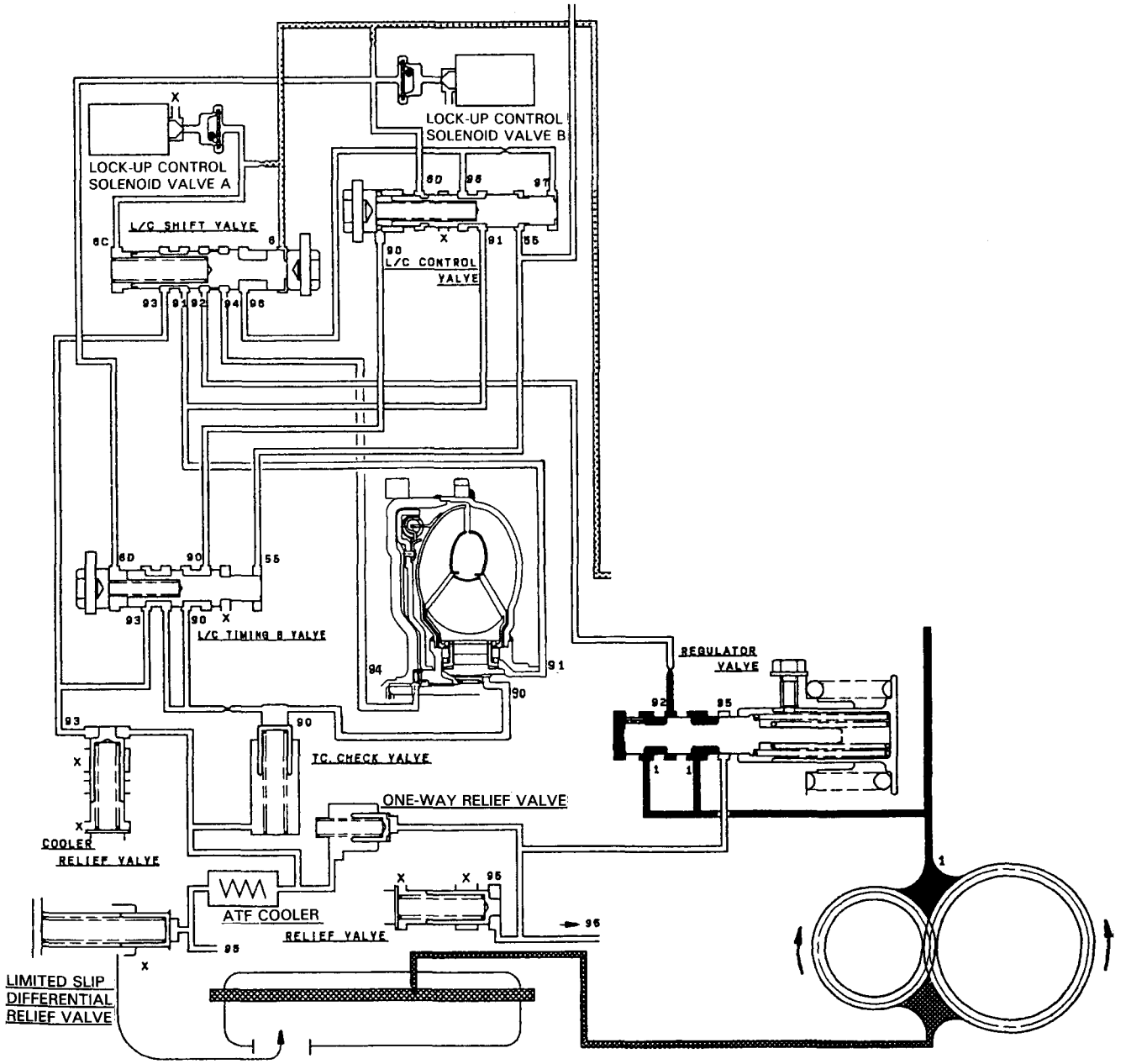

(cont'd)

Description

Lock-up System (cont'd)

No Lock-up

Pressurized fluid regulated by the modulator works on both ends of the lock-up shift valve and on the left side of the lock-up control valve. Under this condition, the pressure on both ends of the lock-up shift valve are equal, and the shift valve is moved to the right side by valve spring tension. Fluid from the ATF pump flows through the left side of the lock-up clutch to the torque converter; the lock up clutch is OFF.

NOTE: When used, "left" or "right" indicates direction on the hydraulic circuit.

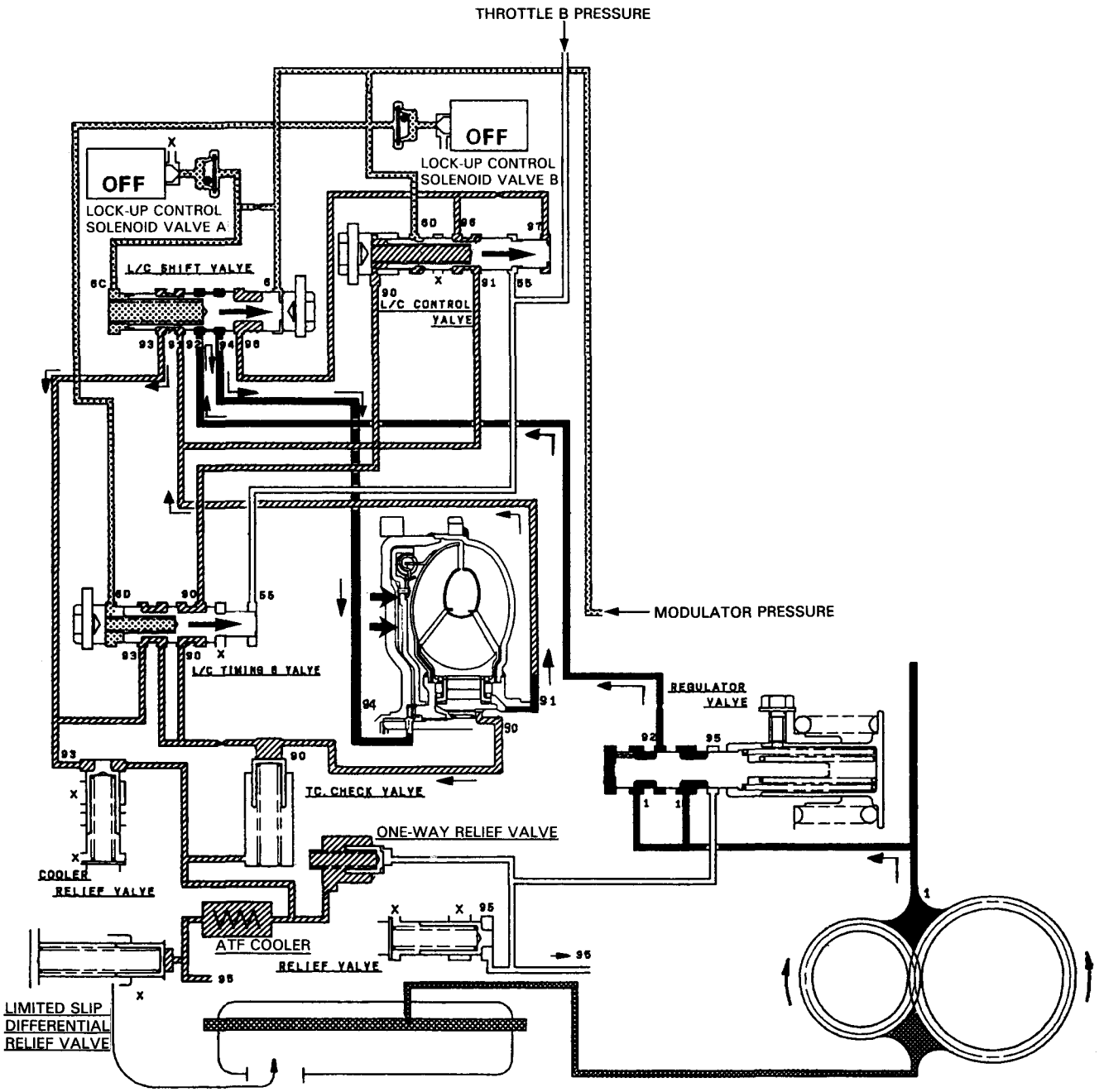

Partial Lock-up

Lock-up Control Solenoid Valve A: ON Lock-up Control Solenoid Valve B: OFF

The TCM switches solenoid valve A ON to release modulator pressure in the left cavity of the lock-up shift valve. Modulator pressure in the right cavity of the lock-up shift valve overcomes the spring force, and the lock-up shift valve is moved to the left side.

The torque converter pressure is separated into two passages:

Torque Converter Inner Pressure: enters into right side to engage lock-up clutch

Torque Converter Back Pressure: enters into left side to disengage lock-up clutch

Back pressure (F2) is regulated by the lock-up control valve, and the position of the lock-up timing valve B is determined by throttle B pressure, tension of the valve spring, and pressure regulated by the modulator. Also, the position of the lock-up control valve is determined by throttle valve B pressure, back pressure of the lock-up control valve, and torque converter pressure regulated by the check valve. In low speed range, throttle B pressure working on the right side of the lock-up control valve is low, causing the valve to be moved to the right side. With the lock-up control solenoid valve B kept OFF, modulator pressure is maintained in the left end of the lock-up control valve; the lock-up control valve is moved slightly to the left side. This slight movement of the lock-up control valve causes the back pressure to be lowered slightly, resulting in partial lock-up.

NOTE: When used, "left" or "right" indicates direction on the hydraulic circuit.

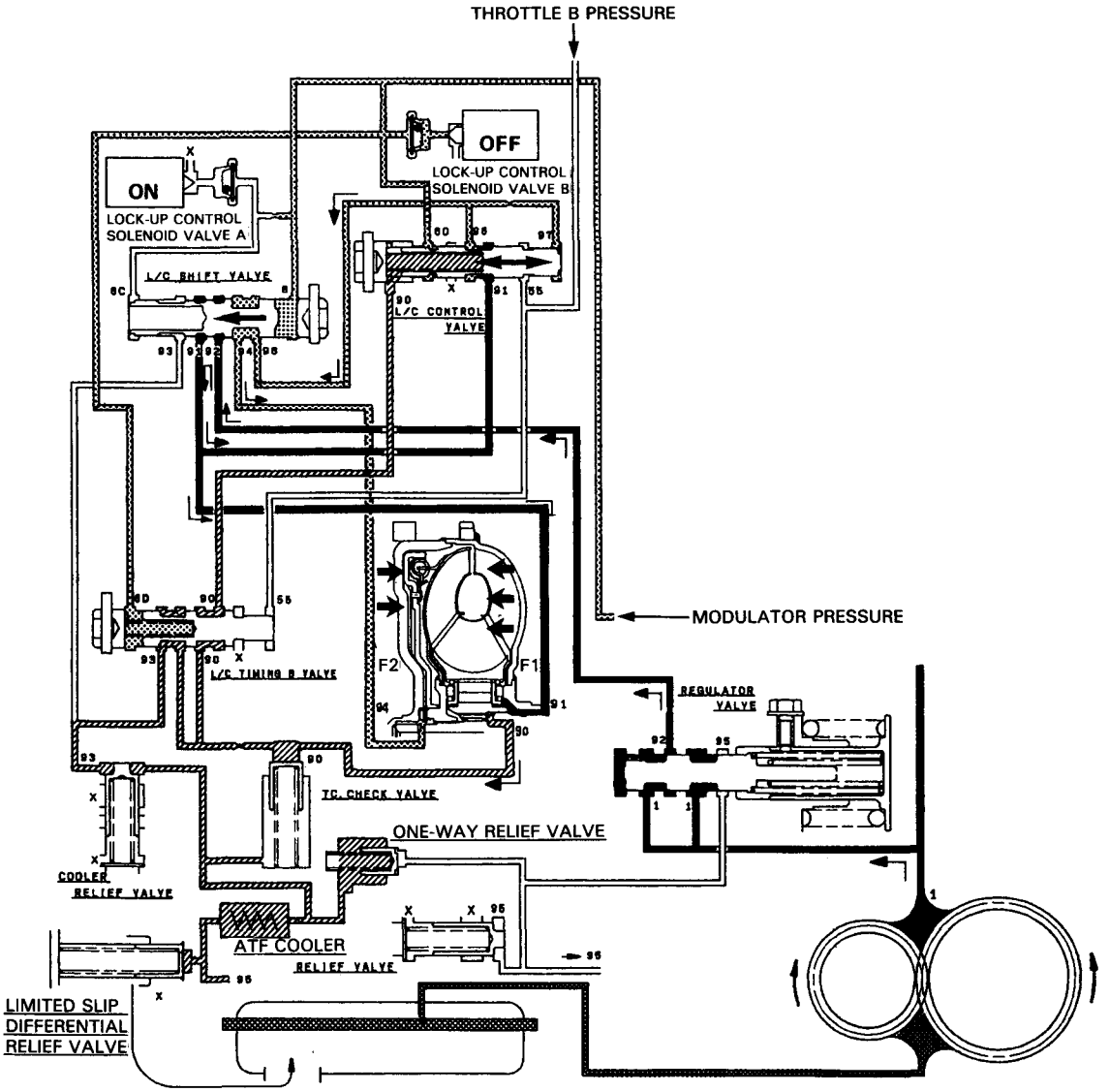

(cont'd)

Description

Lock-up System (cont'd)

Half Lock-up

Lock-up Control Solenoid Valve A: ON Lock-up Control Solenoid Valve B: ON

Modulator pressure is released by solenoid valve B, causing modulator pressure in the left cavity of the lock-up control valve to lower.

Also, modulator pressure in the left cavity of the lock-up timing valve B is low. Throttle B pressure is still low at this time, so, lock-up timing valve B is kept on the right side by spring force.

With lock-up control solenoid valve B turned ON, the lock-up control valve is moved somewhat to the right side, causing back pressure (F2) to lower. This allows move fluid (F1) to work on the lock-up clutch to engage the clutch. Back pressure (F2), which still exists, prevents the clutch from engaging fully.

NOTE: When used, "left" or "right" indicates direction on the hydraulic circuit.

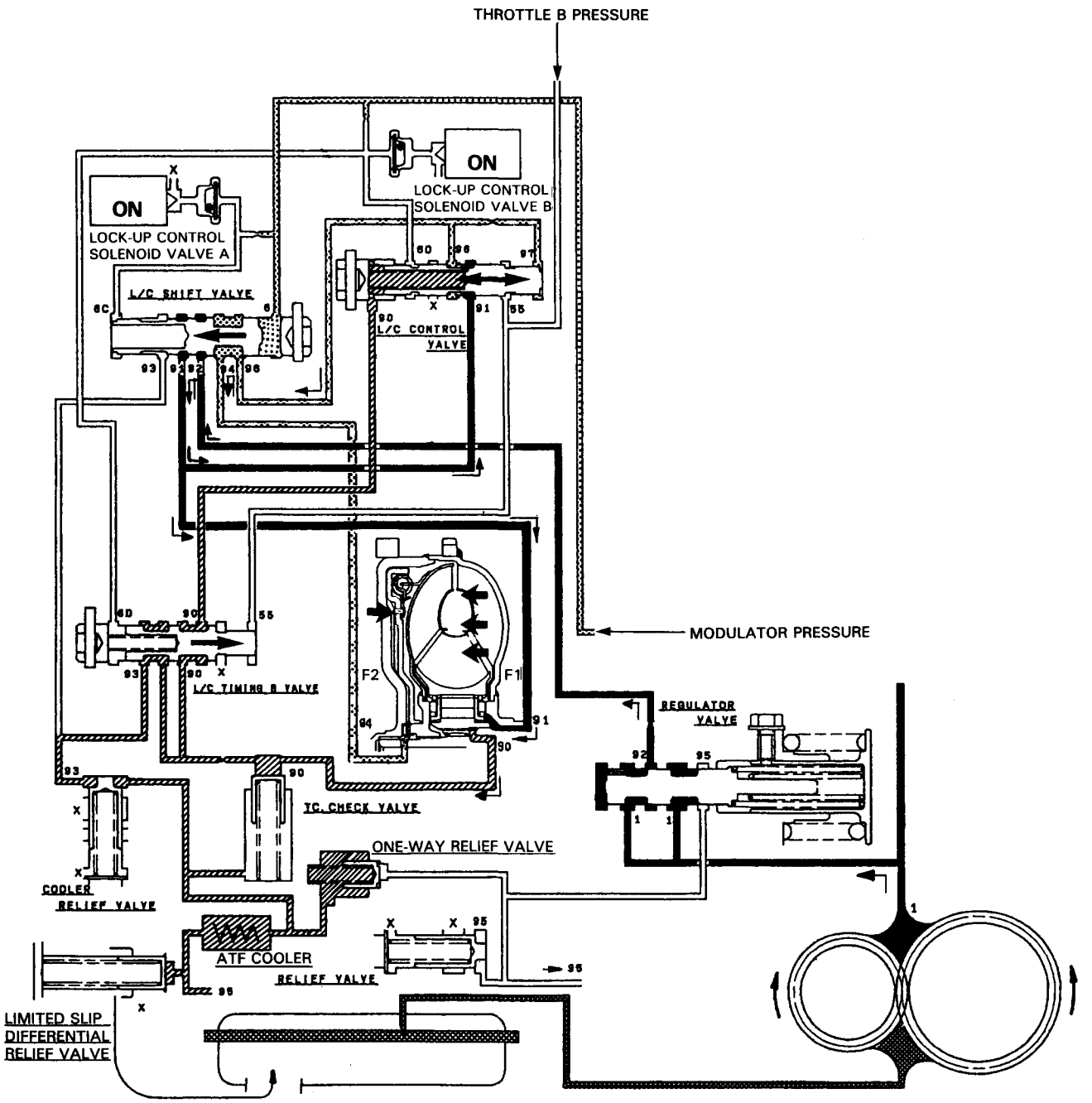

Full Lock-up

Lock-up Control Solenoid Valve A: ON Lock-up Control Solenoid Valve B: ON

When the vehicle speed further increases, the throttle B pressure is increased in accordance with the throttle opening. The lock-up timing valve B overcomes the spring force and moves to the left side. Also this valve closes the fluid port leading to the torque converter check valve.

Under this condition, the throttle B pressure working on the right end of the lock-up control valve becomes greater than that on the left end (modulator pressure in the left end has already been released by the solenoid valve B); i. e., the lock-up control valve is moved to the left side. As this happens, the torque converter back pressure is released fully, causing the lock-up clutch to be engaged fully.

NOTE: When used, "left" or "right" indicates direction on the hydraulic circuit.

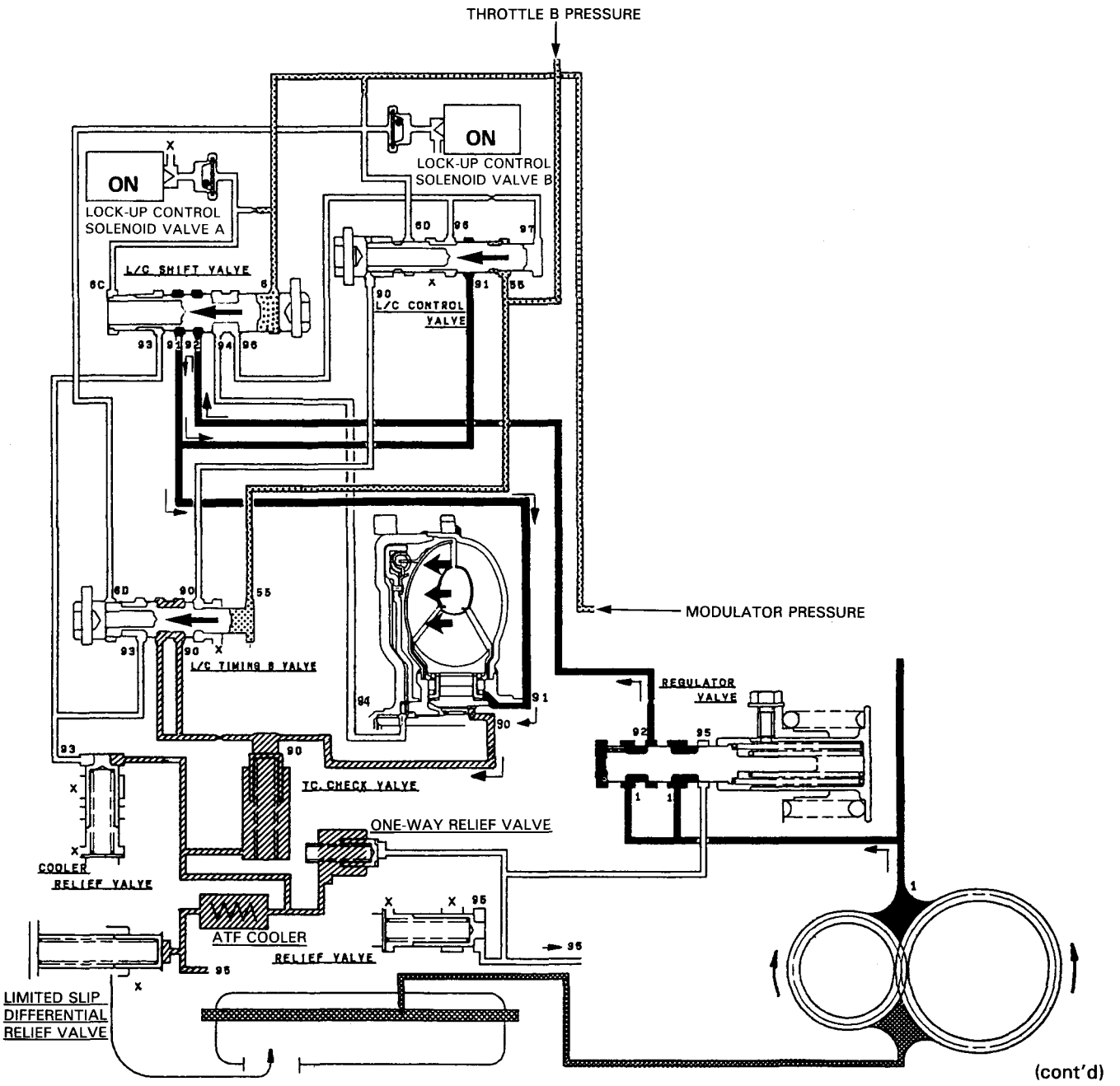

(cont'd)

Description

Lock-up System (cont'd)

Deceleration Lock-up

Lock-up Control Solenoid Valve A: ON Lock-up Control Solenoid Valve B: Duty Operation (ON ⟷ OFF)

The TCM switches the solenoid valve B to ON and OFF alternately at high speeds under certain conditions. The slight lock-up and half lock-up regions are maintained so as to lock the torque converter properly.

NOTE: When used, "left" or "right" indicates direction on the hydraulic circuit.

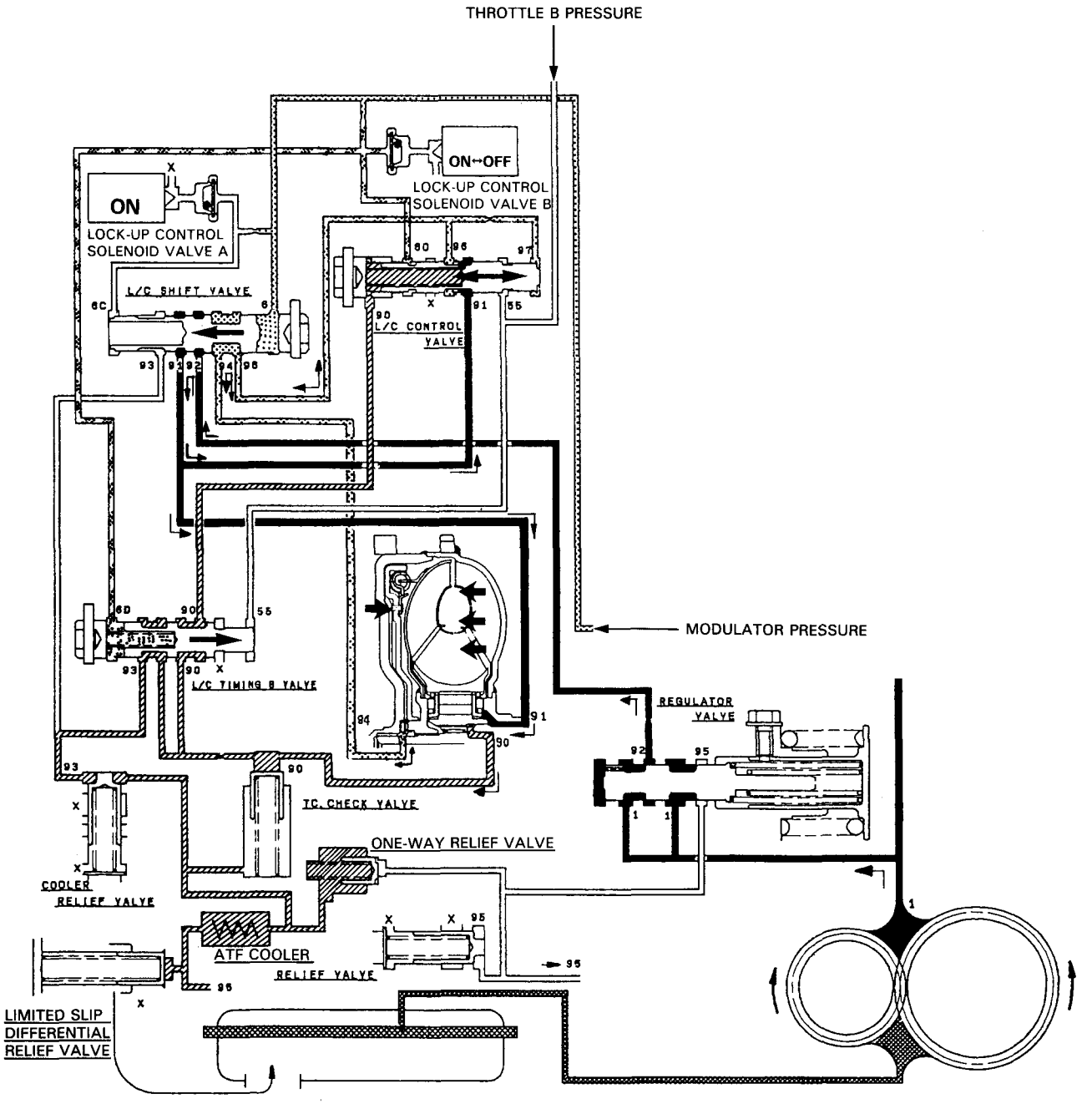

ATF Cooler

The radiator is mounted at the front of the vehicle. The ATF cooler is installed directly on the transmission housing. The ATF is cooled by the engine coolant.

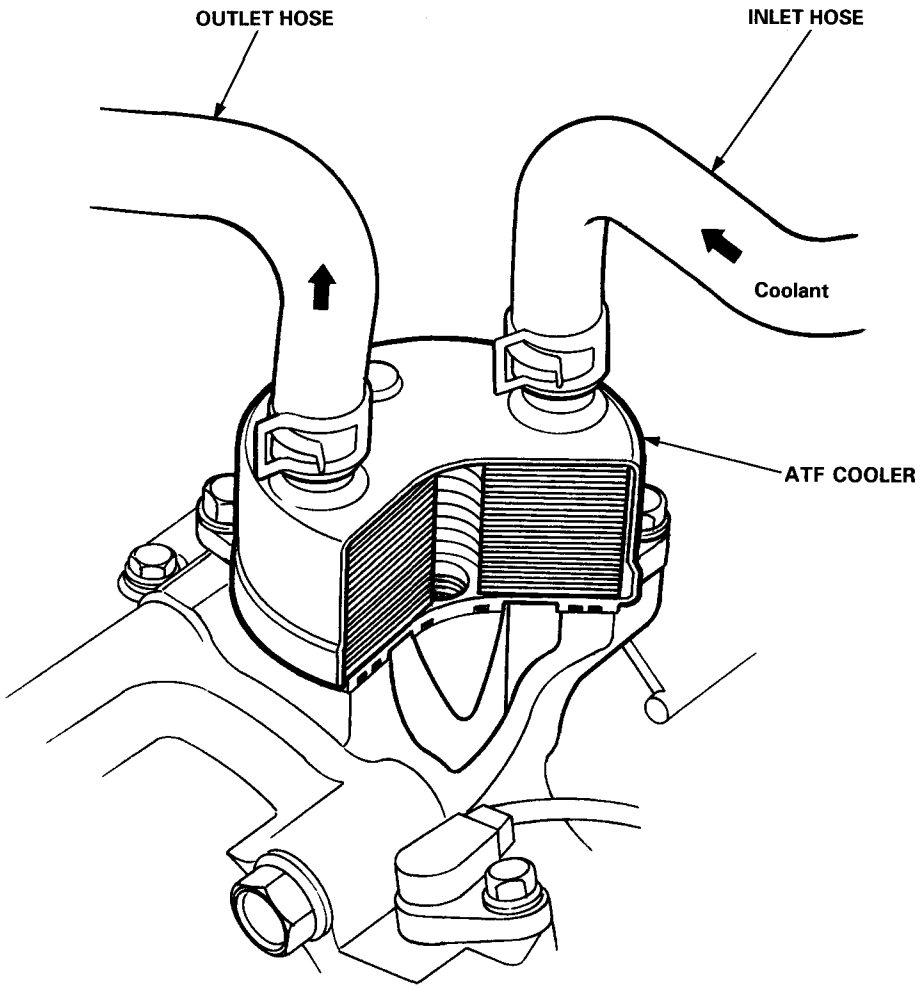

Component Locations

<Front Compartment>

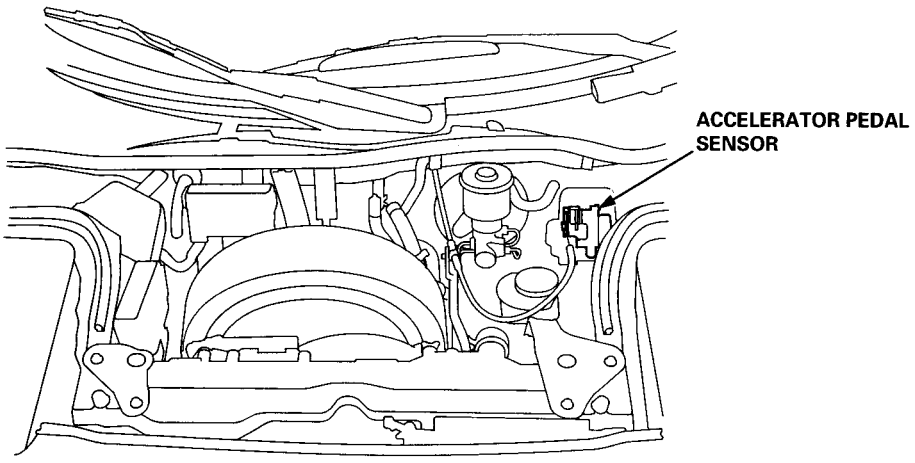

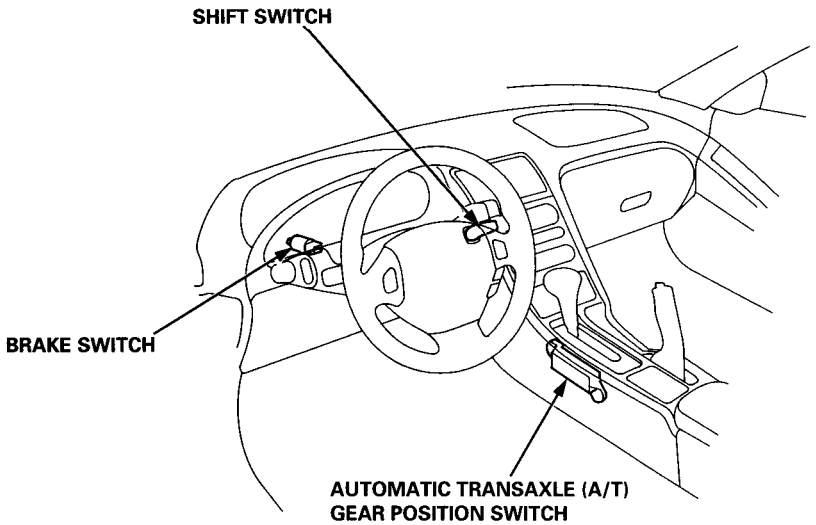

<Engine Compartment>

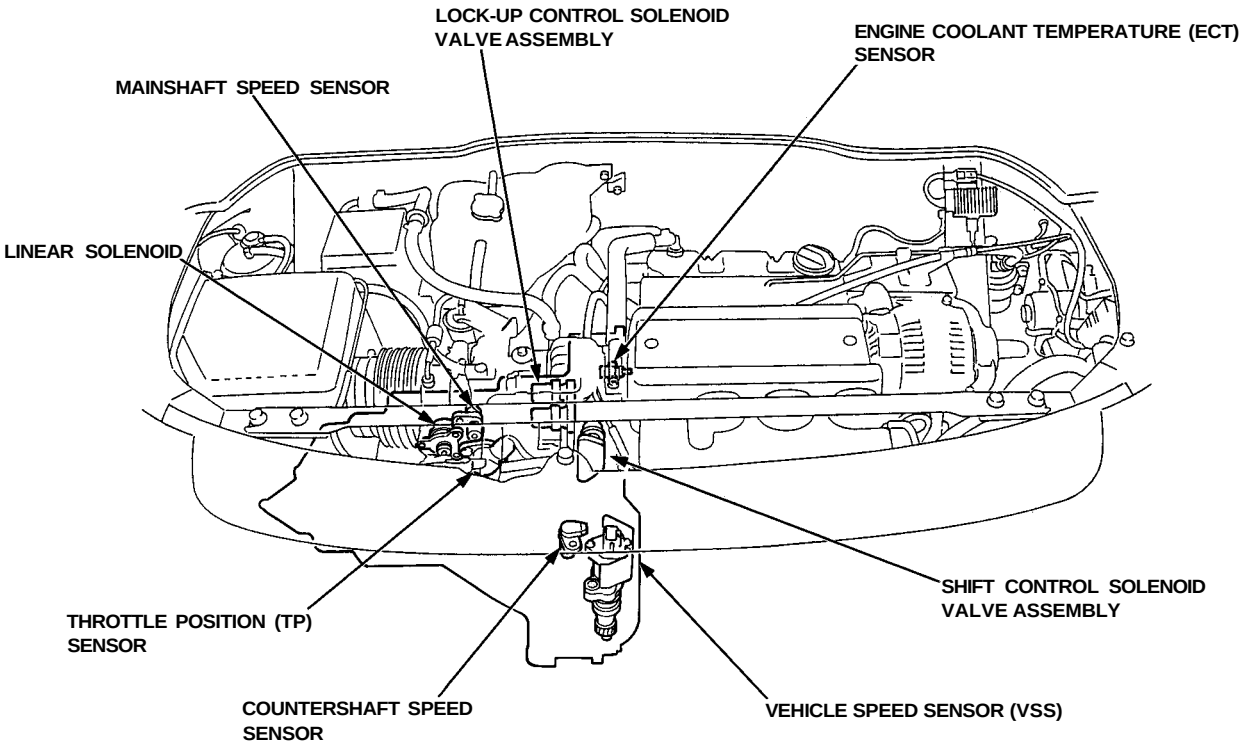

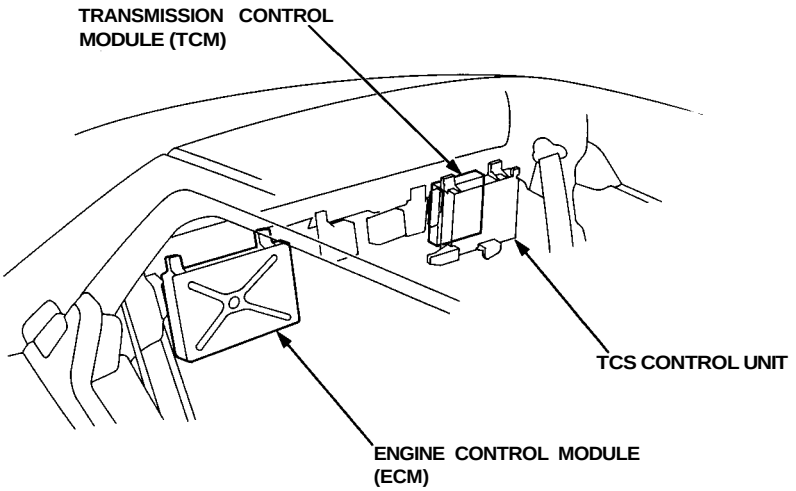

Checking the Diagnostic Trouble Code (DTC)
with an OBDII Scan Tool or the Honda PGM Tester

When the TCM senses an abnormality in the input or output systems, the D indicator light in the gauge assembly will blink. When the 16P Data Link Connector (DLC) (located to the lower left of the glove compartment) is connected to the OBD II Scan Tool or Honda PGM Tester as shown, the scan tool or tester will indicate the Diagnostic Trouble Code (DTC) when the ignition switch is turned ON (II).

When the D indicator light has been reported on, connect the OBD II Scan Tool conforming to SAE J1978 or Honda PGM Tester to the DLC (16P) at the lower left of the glove compartment. Turn the ignition switch ON (II), and observe the DTC on the screen of the OBD II Scan Tool or Honda PGM Tester. After determining the DTC, refer to the electrical system Symptom-to-Component Chart on pages 14-8a and 14-9a.

NOTE: See the OBD II Scan Tool or Honda PGM Tester user's manual for specific instructions.

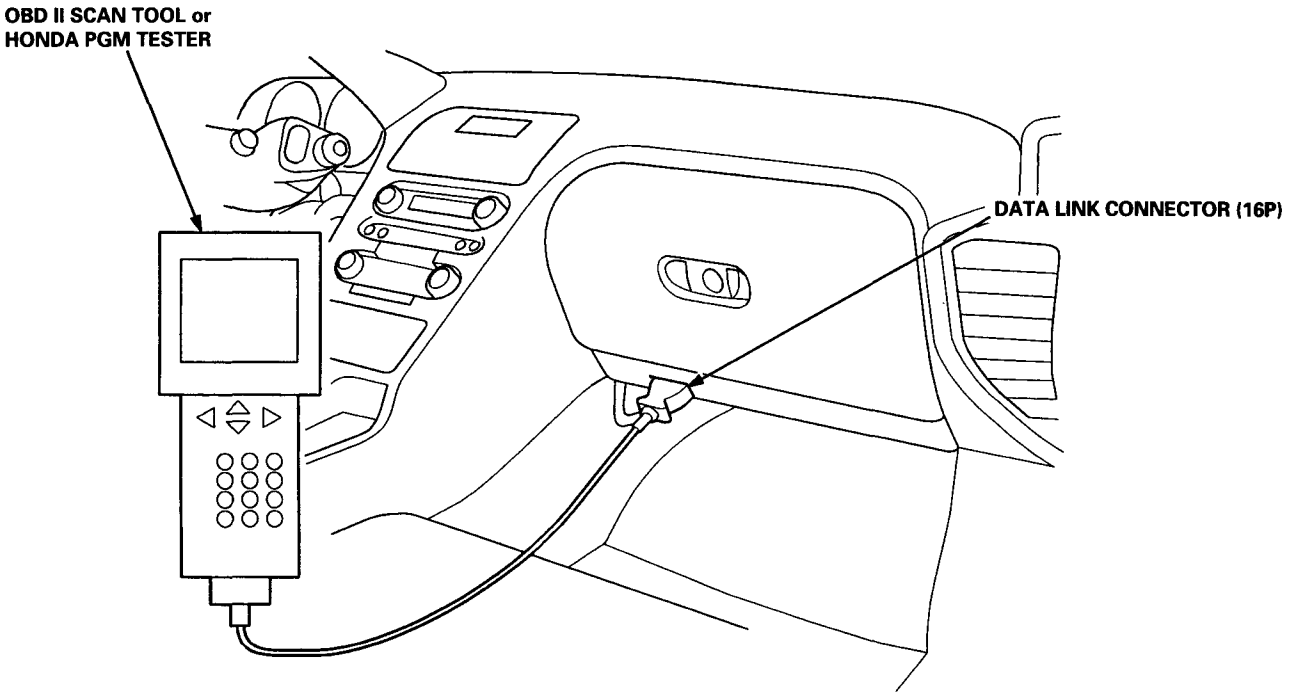

Some PGM-FI problems will also make the D indicator light come on. After repairing the PGM-FI system, disconnect the CLOCK fuse (7.5 A) in the under-hood fuse/relay box for more than 10 seconds to reset the TCM memory, then recheck.

NOTE: Disconnecting the CLOCK fuse also cancels the radio preset stations and the clock setting. Make note of the radio presets before removing the fuse so you can reset them.

Checking the Diagnostic Trouble Code (DTC)
with the Service Check Connector and Special Toot

When the TCM senses an abnormality in the input or output systems, the [D] indicator light in the gauge assembly will blink.
When the Service Check Connector (2P) (located to the lower right of the glove compartment) is connected with the special tool as shown, the [D] indicator light will blink the Diagnostic Trouble Code (DTC) when the ignition switch is turned on (II).

When the [D] indicator light has been reported on, connect the Service Check Connector (2P) to the special tool.
Then turn the ignition switch on (II) and observe the [D] indicator light.

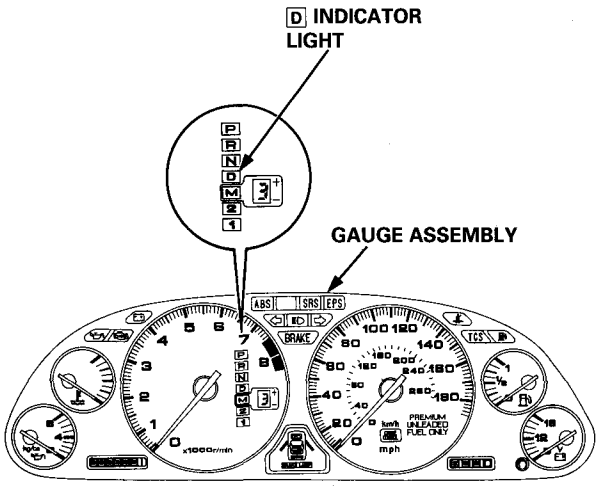

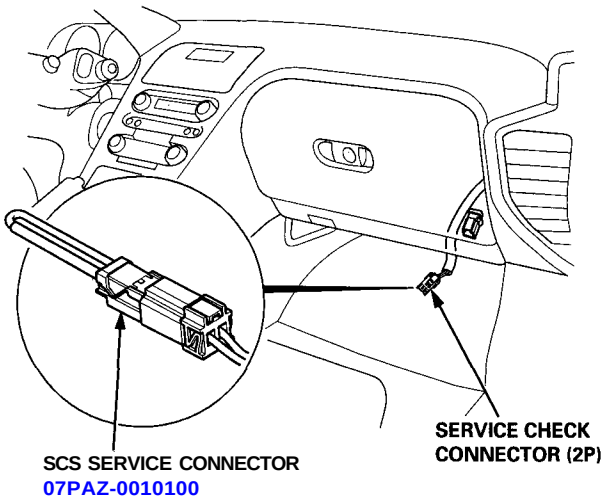

Codes 1 through 9 are indicated by individual short blinks, codes 10 through 20 are indicated by a series of long and short blinks. One long blink equals 10 short blinks. Add the long and short blinks together.to determine the code. After determining the code, refer to the electrical system Symptom-to-Component Chart on pages 14-8a and 14-9a.

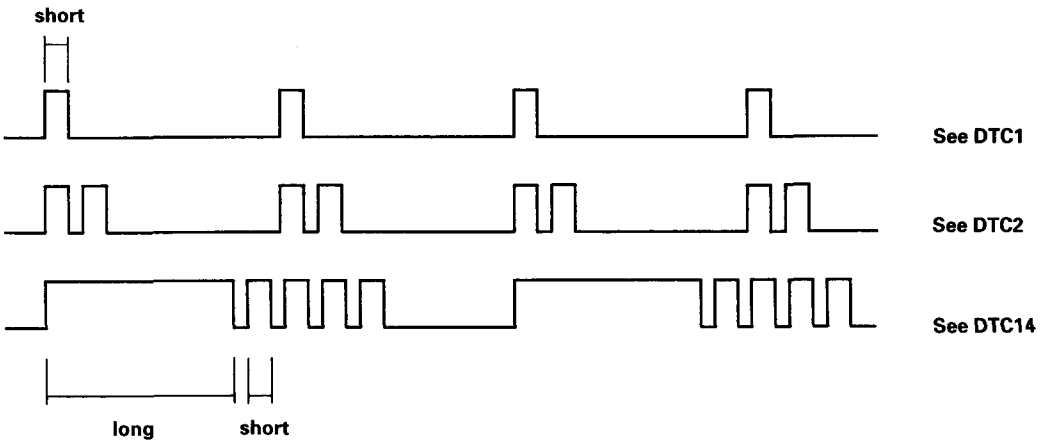

Some PGM-FI problems will also make the [D] indicator light come on. After repairing the PGM-FI system, disconnect the CLOCK fuse (7.5 A) in the under-hood fuse/relay box for more than 10 seconds to reset the TCM memory, then recheck.

NOTE: Disconnecting the CLOCK fuse also cancels the radio preset stations and the clock setting.
Make note of the radio presets before removing the fuse so you can reset them.

SRS components are located in this area. Review the SRS component locations, precautions, and procedures in the SRS section 24 before performing repairs or service.

1. Remove the seat back panels (see section 20).
2. Remove the connector holder from the TCS control unit, and disconnect the antenna lead.
3. Remove the TCS control unit.

   NOTE: Do not disconnect the connectors from the TCS control unit.

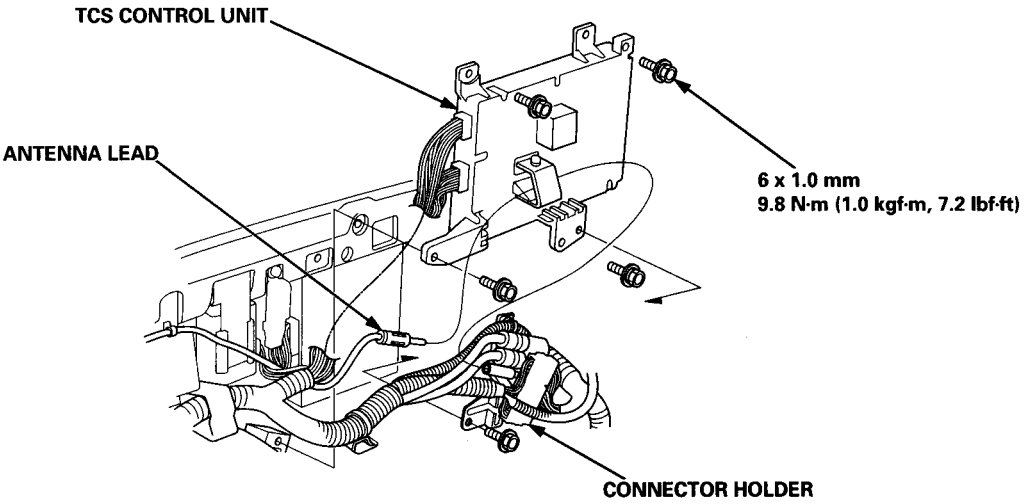

4. Disconnect the B (22P) connector from the TCM, then remove the TCM.

   NOTE: Do not disconnect the A (26P) connector from the TCM while removing the TCM.

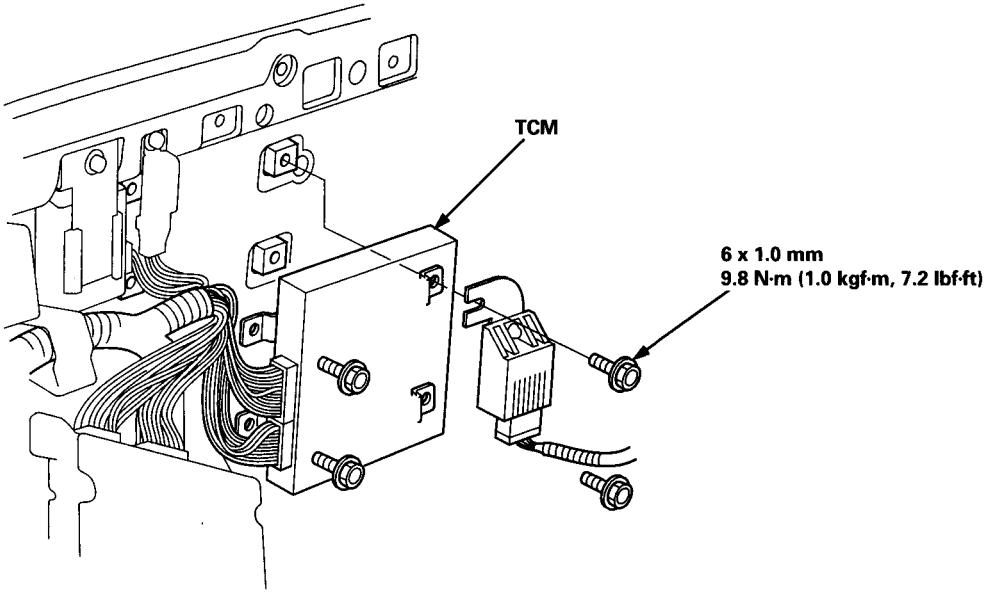

5. Inspect the circuit on the TCM according to the troubleshooting flowchart with the special tools and a digital multimeter as shown.

How to use the Backprobe Set

Connect the backprobe adapters to the stacking patch cords, and connect the cords to a multimeter. Using the wire insulation as a guide for the contoured tip of the backprobe adapter, gently slide the tip into the connector from the wire side until it comes in contact with the terminal end of the wire.

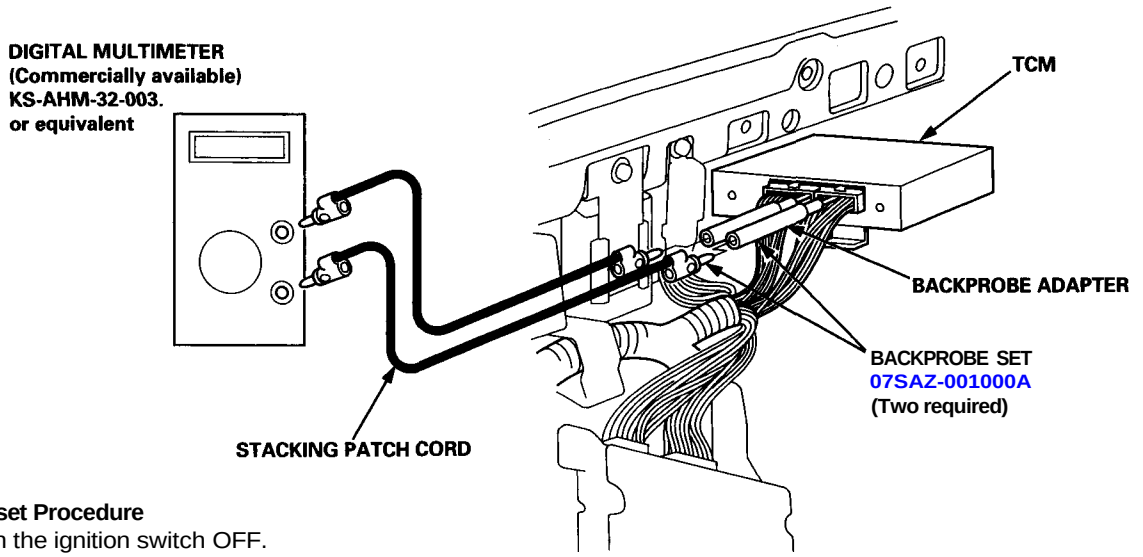

TCM Reset Procedure

1. Turn the ignition switch OFF.

2. Remove the No. 33 CLOCK fuse (7.5 A) from the under-hood fuse/relay box for 10 seconds to reset the TCM.
   NOTE:
   - Disconnecting the No. 33 CLOCK fuse also cancels the radio preset stations and clock setting. Make note of the radio presets before removing the fuse so you can reset them.
   - The TCM memory cannot be cleared by using the OBD II scan Tool or Honda PGM Tester; be sure to remove the CLOCK fuse to reset the TCM.

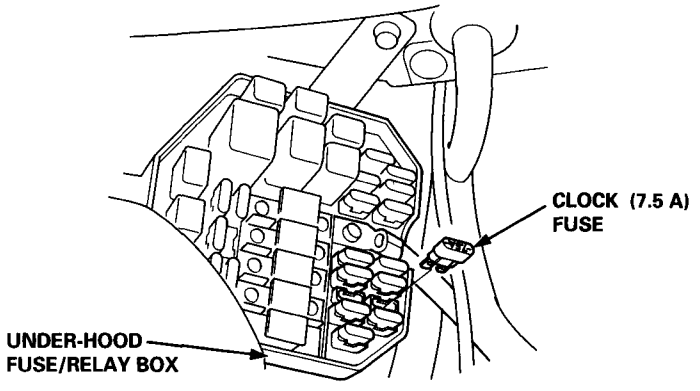

Final Procedure

NOTE: This procedure must be done after any troubleshooting.

1. Turn the ignition switch OFF.

2. Reset the TCM.

3. Disconnect the OBD II Scan Tool or Honda PGM Tester from the Data Link Connector, or remove the special tool from the Service Check Connector.

4. Turn the ignition switch ON (II), and set the radio presets and clock setting.

Linear Solenoid

Test

1. Remove the linear solenoid connector.
2. Measure the resistance between the A and B terminal.

STANDARD: 5.0-5.5 Ω (at 70°F, 20°C)

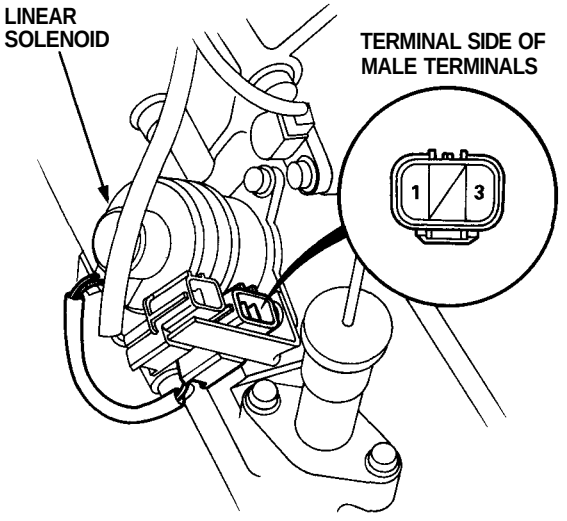

3. Replace the linear solenoid if resistance is out of specification.
4. Connect the No. 3 terminal of the linear solenoid connector to the battery positive terminal and the No. 1 terminal to the battery negative terminal. A clicking sound should be heard.
5. If not, replace the linear solenoid.

Linear Solenoid

Replacement

NOTE: Select the appropriate shim when the linear solenoid is replaced.

1. Remove the linear solenoid and shim from the transmission housing.
2. Clean the mounting surface.
3. Measure the distance between the mounting surface of the linear solenoid and the throttle valve body.

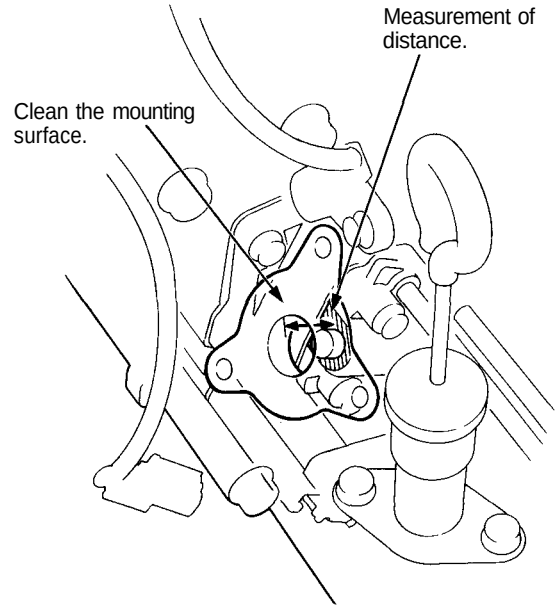

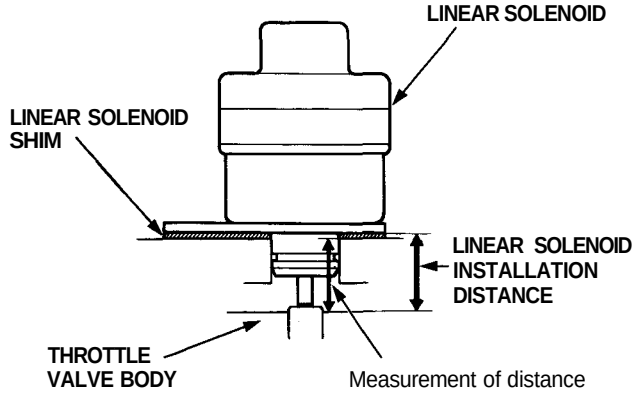

LINEAR SOLENOID INSTALLATION DISTANCE:
23.5 - 23.7 mm (0.925 - 0.933 in)

NOTE: If the measurement of distance is 21.6 mm (0.850 in), select the shim of 2.0 mm (0.079 in) to obtain the installation distance of 23.6 mm (0.929 in).

4. Select a new shim from the chart below.

   NOTE: Identification color is painted on the side of the shim.

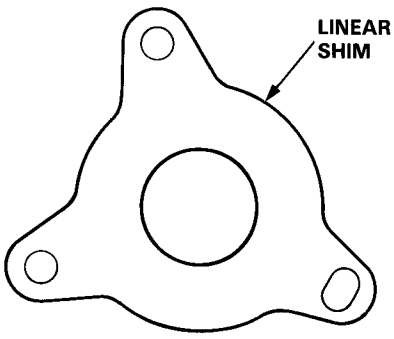

LINEAR SOLENOID SHIM

No.	Part Number	Thickness	Color
1	28252-PR9-000	1.2 mm (0.047 in)	BLACK
2	28253-PR9-000	1.4 mm (0.055 in)	BROWN
3	28254-PR9-000	1.6 mm (0.063 in)	RED
4	28255-PR9-000	1.8 mm (0.071 in)	PINK
5	28256-PR9-000	2.0 mm (0.079 in)	YELLOW
6	28257-PR9-000	2.2 mm (0.087 in)	GREEN
7	28258-PR9-000	2.4 mm (0.094 in)	BLUE
8	28259-PR9-000	2.6 mm (0.102 in)	SKY BLUE
9	28260-PR9-000	2.8 mm (0.110 in)	WHITE

5. Apply liquid gasket to both sides of the linear solenoid shim as shown. Use liquid gasket Part No. 08718-0001.

   CAUTION:
   - **Install the linear solenoid within 10 minutes of applying the liquid gasket.**
   - **After installation, wipe off any liquid gasket that squeezed out from around the linear solenoid shim.**

   NOTE:
   - Check that the mounting surfaces are clean and dry before applying liquid gasket. Degrease if necessary.
   - Apply the liquid gasket evenly.
   - Do not install the parts if 10 minutes or more has passed since you first applied the liquid gasket. If 10 minutes has passed, reapply liquid gasket after removing the residue.
   - Wait at least 30 minutes before filling with ATF.

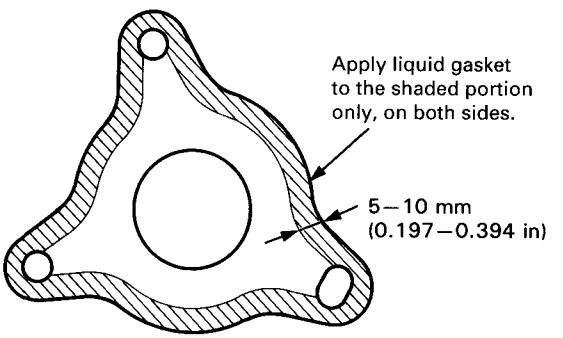

6. Install the linear solenoid and the shim to the transmission housing.

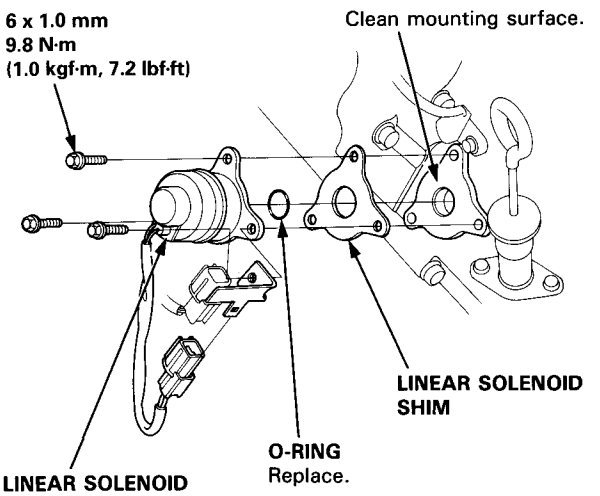

Mainshaft/Countershaft Speed Sensors

Replacement

1. Remove the 6 mm bolt from the transmission housing, then remove the mainshaft and countershaft speed sensors.
2. Replace the O-ring with a new one before reassembling the mainshaft and countershaft speed sensors.
3. Install the washer only on the countershaft speed sensor. Do not install the washer on the mainshaft speed sensor.
4. Install the speed sensor(s) in the transmission housing.

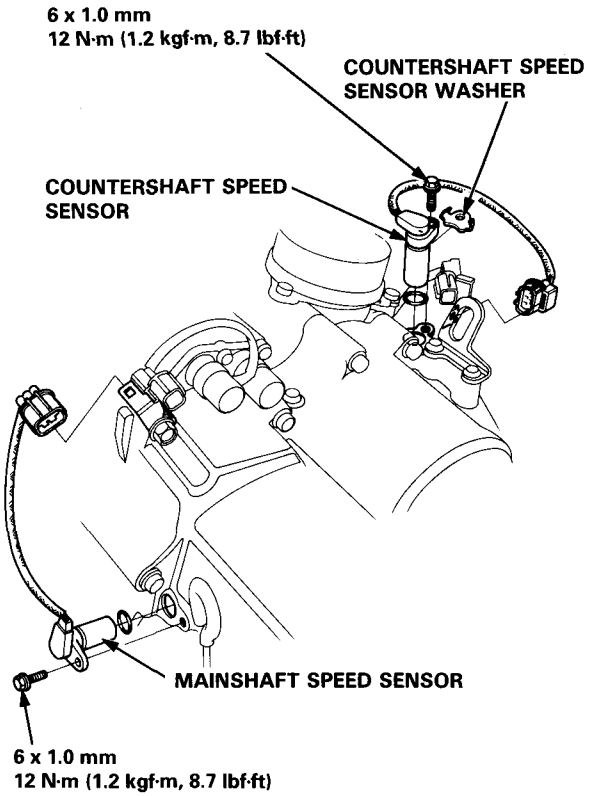

Transmission Control Module (TCM)

Replacement

SRS components are located in this area. Review the SRS component locations, precautions, and procedures in the SRS (section 24) before performing repairs or service.

1. Remove the seat back panels (see section 20).
2. Remove the connector holder from the TCS control unit, and disconnect the antenna lead.
3. Remove the TCS control unit.

   NOTE: Do not disconnect the connectors from the TCS control unit.

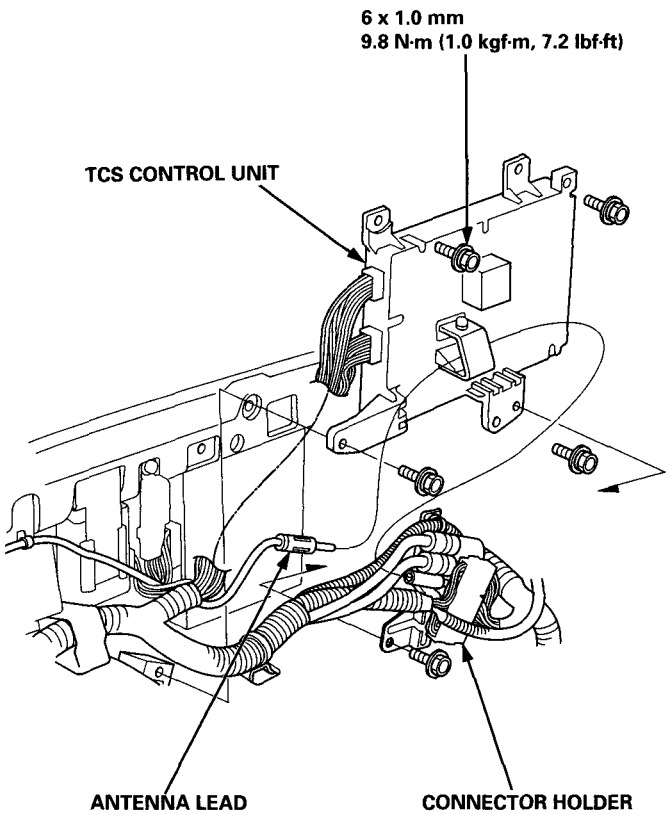

4. Disconnect the A (26P) and B (22P) connectors from the TCM, then remove the TCM.

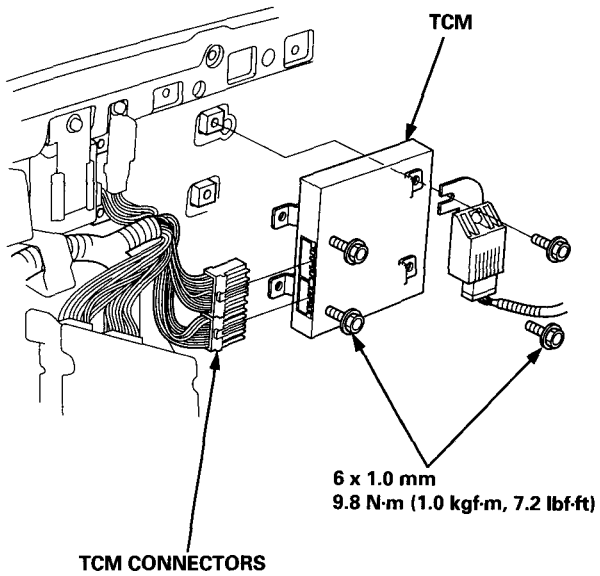

Symptom-to-Component Chart

Hydraulic System

SYMPTOM	Check these items on the PROBABLE CAUSE List	Check these items on the NOTES List
Engine runs, but vehicle does not move in any gear.	1, 2, 3, 5, 6, 9, 39, 44	K, L, R, S
Vehicle moves in 3/M and 2, but not in D position.	8, 9, 10, 11	C, M, O
Vehicle moves in D, 3/M, 1, but not in 2 position.	7, 9, 12, 13	C, L
Vehicle moves in D, 3/M, 2, 1, but not in R position.	4, 9, 14, 20, 34	C, L, Q
Vehicle moves in D, 3/M, 2, but not in 1 position.	9, 11, 61	
Vehicle moves in N position.	11, 13, 33, 34, 36, 37, 38	C, D
Excessive idle vibration.	2, 35, 39, 50, 51, 53	B, K, L
Poor acceleration; flares on starting off in D position.		
Stall rpm high in D, 3/M, 2, 1 position.	1, 2, 3, 9, 44, 47	K, L, R
Stall rpm high in D position.	8, 9, 11, 13	C, D
Stall rpm is in specification.	15	N
Stall rpm low.	17, 35, 50, 51, 53	R
No shift.	20, 21, 22, 46, 53, 54, 57	G, L
Fails to shift in D position; from 1st to 4th gear.	21, 22, 57	
Erratic upshifting.		V
1-2 upshift, 2-3 upshift, 3-4 upshift	57	
1-2 upshift	53, 57	
2-3 upshift	54, 57	
3-4 upshift	53, 57	
Harsh upshift (1-2).	13, 18, 19, 20, 23, 30	C, D, E, V
Harsh upshift (2-3).	18, 19, 21, 23, 24, 26, 30, 33	C, D, E, H, L, V
Harsh upshift (3-4).	18, 19, 22, 24, 25, 27, 31, 34	C, D, E, I, L, V
Harsh downshift (2-1).	11, 18, 19, 20, 23, 30, 40	O
Harsh downshift (3-2).	13, 18, 19, 21, 23, 24, 31, 41, 59	C, D, E, H
Harsh downshift (4-3).	18, 19, 22, 24, 25, 32, 33, 42, 60	C, D, E, I
Flares on 2-3 upshift.	18, 19, 21, 23, 24, 26, 28, 31, 33	E, L, V
Flares on 3-4 upshift.	18, 19, 22, 24, 25, 27, 28, 32, 34	E, L, V, N
Excessive shock on 2-3 upshift.	18, 19, 23, 24, 30, 41, 48	E, L, N
Excessive shock on 3-4 upshift.	18, 19, 24, 25, 27, 31, 42, 48	E, L, N
Late shift from N position to D position.	4, 11, 28, 29	M
Late shift from N position to R position.	4, 20, 34, 58	Q
Noise from transmission in all shift lever positions.	2, 43	K, L, Q
Shift lever does not operate smoothly.	9, 45	P
Fails to shift; stuck in 4th gear.	53, 54, 57	
Transmission will not shift into parking gear in P position.	9, 45	P
Lock-up clutch does not disengage.	18, 19, 49, 50, 51, 52, 55, 56, 57	E, L, V
Lock-up clutch does not operate smoothly.	18, 19, 49, 50, 51, 52, 55, 56, 57	L
Lock-up clutch does not engage.	18, 19, 47, 49, 50, 51, 52, 55, 56, 57	E, L, V
No engine braking in 1 position.	11, 61	C, D, L
Vibration in all positions.	39	

PROBABLE CAUSE			
1	Low ATF.	41	3rd check ball stuck.
2	ATF pump worn or binding.	42	4th check ball stuck.
3	Regulator valve stuck or spring worn.	43	Torque converter housing or transmission housing ball bearing worn/damaged.
4	Servo valve stuck.	44	ATF strainer clogged.
5	Mainshaft worn/damaged.	45	Joint in shift cable and transmission or body worn.
6	Final gears worn/damaged (2 gears).	46	Modulator valve stuck.
7	Secondary shaft worn/damaged.	47	Torque converter check valve stuck.
8	One-way (sprag) clutch worn/damaged.	48	Foreign material in separator plate orifice.
9	Shift cable broken/out of adjustment.	49	Lock-up timing valve stuck.
10	1st gears worn/damaged (2 gears).	50	Lock-up shift valve stuck.
11	1st clutch defective.	51	Lock-up piston defective.
12	2nd gears worn/damaged (2gears).	52	Lock-up control valve stuck.
13	2nd clutch defective.	53	Shift control solenoid valve A defective.
14	Reverse gears worn/damaged (2 gears).	54	Shift control solenoid valve B defective.
15	Excessive ATF.	55	Lock-up control solenoid valve A defective.
16	Torque converter one-way clutch defective.	56	Lock-up control solenoid valve B defective.
17	Engine throttle cable out of adjustment.	57	TCM defective.
18	Throttle valve B stuck.	58	Servo control valve stuck.
19	Linear solenoid defective.	59	3-2 kick-down valve stuck.
20	1-2 shift valve stuck.	60	4-3 kick-down valve stuck.
21	2-3 shift valve stuck.	61	1st-hold clutch defective.
22	3-4 shift valve stuck.		
23	2nd accumulator defective.		
24	3rd accumulator defective.		
25	4th accumulator defective.		
26	2nd orifice control valve stuck.		
27	3rd orifice control valve stuck.		
28	Foreign material in main orifice.		
29	Foreign material in 1st orifice.		
30	Foreign material in 2nd orifice.		
31	Foreign material in 3rd orifice.		
32	Foreign material in 4th orifice.		
33	3rd clutch defective.		
34	4th clutch defective.		
35	Engine output low.		
36	Needle bearing worn/damaged.		
37	Thrust washer worn/damaged.		
38	Clutch clearance incorrect.		
39	Drive plate defective or transmission misassembly.		
40	2nd check ball stuck.		

(cont'd)

Symptom-to-Component Chart

Hydraulic System (cont'd)

The following symptoms can be caused by improper repair or assembly.	Check these items on the PROBABLE CAUSE DUE TO IMPROPER REPAIR	Items on the NOTES CHART
Vehicle creeps in [N] position.	R1, R2	
Vehicle does not move in [D] position.	R4	
Transmission locks up in [R] position.	R3, R12	
Excessive drag in transmission.	R6	R, K
Excessive vibration, rpm related.	R7	
Noise with wheels moving only.	R5	
Main seal pops out.	R8	S
Various shifting problems.	R9, R10	
Harsh upshifts.	R11	

PROBABLE CAUSE DUE TO IMPROPER REPAIR	
R1.	Improper clutch clearance.
R2.	Improper gear clearance.
R3.	Parking brake lever installed upside down.
R4.	One-way (sprag) clutch installed upside down.
R5.	Reverse selector hub installed upside down.
R6.	ATF pump binding.
R7.	Torque converter not fully seated in ATF pump.
R8.	Main seal improperly installed.
R9.	Springs improperly installed.
R10.	Valves improperly installed.
R11.	Ball check valves not installed.
R12.	Shift fork bolt not installed.

NOTES	
B.	Set idle rpm in gear to specified idle speed. If still no good, adjust motor mounts as outlined in engine section of service manual.
C.	If the large clutch piston O-ring is broken, inspect the piston groove for rough machining.
D.	If the clutch pack is seized or is excessively worn, inspect the other clutches for wear and check the orifice control valves and throttle valves for free movement.
E.	If throttle valve B is stuck, inspect the clutches for wear.
G.	If the 1—2 shift valve is stuck closed, the transmission will not upshift. If stuck open the transmission has no 1st gear.
H.	If the 2nd orifice control valve is stuck, inspect the 2nd and 3rd clutch packs for wear.
I.	If the 3rd orifice control valve is struck, inspect the 3rd and 4th clutch packs for wear.
J.	If the clutch pressure control valve is stuck closed, the transmission will not shift out of 1st gear.
K.	Improper alignment of main valve body and torque converter housing may cause ATF pump seizure. The symptoms are mostly an rpm-related ticking noise or a high pitched squeak.

NOTES	
L.	If the ATF strainer is clogged with particles of steel or aluminum, inspect the ATF pump and differential clutch and planetary gear assembly. If all are OK and no cause for the contamination is found, replace the torque converter.
M.	If the 1st clutch feedpipe guide in the end cover is scored by the mainshaft, inspect the ball bearing for excessive movement in the transmission housing. If OK, replace the end cover as it is dented. The O-ring under the guide is probably worn.
N.	Replace the mainshaft if the bushings for the 1st and 4th feedpipe are loose or damaged. If the 1st feedpipe is damaged or out of round, replace it. If the 4th feedpipe is damaged or out of round, replace the end cover.
O.	A worn or damaged one-way (sprag) clutch is mostly a result of shifting the transmission in [D] position while the wheels rotate in reverse, such as rocking the car in snow.
P.	Inspect the frame for collision damage.
Q.	Inspect for damage or wear: 1. Reverse selector gear teeth chamfers. 2. Engagement teeth chamfers of countershaft 4th and reverse gear. 3. Shift fork for scuff marks in center. 4. Differential clutch or planetary gear assembly for wear. 5. Bottom of 3rd clutch for swirl marks. Replace items 1, 2, 3 and 4 if worn or damaged. If transmission makes clicking, grinding or whirring noise, also replace mainshaft 4th gear and reverse idler gear and countershaft 4th gear in addition to 1, 2, 3 or 4. If differential clutch or planetary gear assembly is worn, overhaul differential assembly and replace ATF strainer and thoroughly clean transmission, flush torque converter, cooler and lines. If bottom of 3rd clutch is swirled and transmission makes gear noise, replace the countershaft and final driven gear.
R.	Be very careful not to damage the torque converter housing when replacing the main ball bearing. You may also damage the ATF pump when you torque down the main valve body. This will result in ATF pump seizure if not detected. Use proper tools.
S.	Install the main seal flush with the torque converter housing. If you push it into the torque converter housing until it bottoms out, it will block the fluid return passage and result in damage.
T.	Harsh downshifts when coasting to a stop with zero throttle may be caused by the linear solenoid not working.
V.	Linear solenoid shim selection is essential for proper operation of the transmission. Not only does it affect the shift quality if misadjusted, but also the lock-up clutch operation. A thick shim will result in throttle pressure being too low for the amount of engine torque input into the transmission and may cause clutch slippage. A thin shim will result in too high throttle pressures which may cause harsh shifts, erratic shifts and torque converter hunting.

D position

SRS components are located in this area. Review the SRS component locations, precautions, and procedures in the SRS (section 24) before performing repairs or service.

1. Apply parking brake and block the wheels. Start the engine, and warm up the engine to normal operating temperature (the cooling fan comes on). (When the engine coolant temperature is below normal operating temperature, the shift point is higher than specified vehicle speed.) Shift to D position while depressing the brake pedal. Depress the accelerator pedal, and release it suddenly. The engine should not stall.

2. Check that the shift points on a flat road occur at the approximate speeds shown on the next page. Also check for abnormal noise and clutch slippage.

   NOTE: Throttle position sensor voltage represents the throttle opening.

   -1. Remove the seat back panels (see section 20).

   -2. Remove the connector holder from the TCS control unit, and disconnect the antenna lead. Then remove the TCS control unit (see page 14-52).

   NOTE: Do not disconnect the TCS control unit connectors.

   -3. Remove the TCM and turn it over.

   - 4. Set the digital multimeter to check voltage between the B4 (+) terminal and A13 (-) or A26 (-) terminal of the TCM for the throttle position sensor.

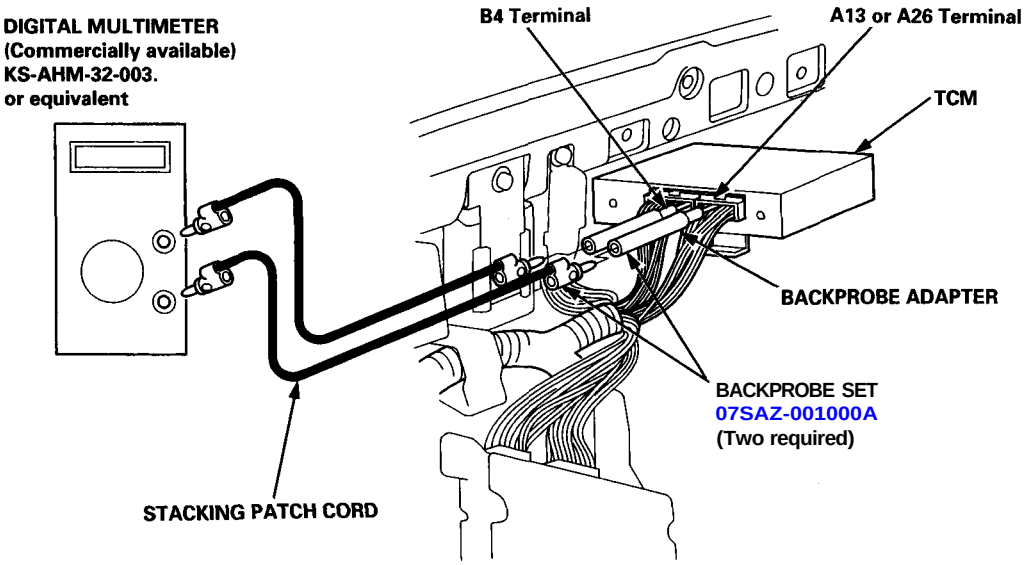

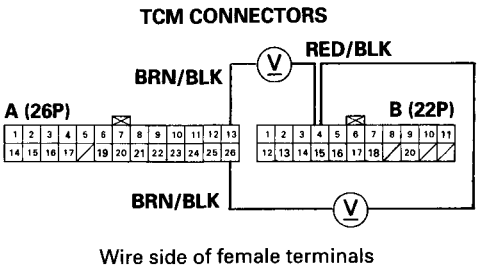

Wire side of female terminals

Upshift

		1st – 2nd	2nd – 3rd	3rd – 4th	Lock up Clutch ON
Throttle position sensor voltage: 0.96 V Coasting down-hill from a stop	km/h	14 – 18	29 – 33	41 – 47	22 – 26
	mph	9 – 11	18 – 21	25 – 29	14 – 16
Throttle position sensor voltage: 2.35 V Acceleration from a stop	km/h	41 – 47	81 – 87	122 – 130	143 – 150
	mph	25 – 29	50 – 54	76 – 81	89 – 93
Full-throttle Acceleration from a stop	km/h	57 – 64	107 – 115	169 – 178	166 – 175
	mph	35 – 40	66 – 71	105 – 111	103 – 109

Downshift

		Lock up Clutch OFF	4th – 3rd	3rd – 2nd	2nd – 1st
Throttle position sensor voltage: 0.96 V Coasting or braking to a stop	km/h	20 – 26	28 – 34	———	9 – 15
	mph	12 – 16	17 – 21	———	6 – 9
Throttle position sensor voltage: 2.35 V When vehicle is slowed by increased grade, wind, etc.	km/h	92 – 99	———	———	———
	mph	57 – 62	———	———	———
Full-throttle When vehicle is slowed by increased grade, wind, etc.	km/h	161 – 169	156 – 165	96 – 105	42 – 49
	mph	100 – 105	97 – 103	60 – 65	26 – 30

3. Accelerate to about 35 mph (57 km/h) so the transmission is in 4th, then shift from [D] position to [2] position. The vehicle should immediately begin slowing down from engine braking.

CAUTION: Do not shift from [D] position to [2] position at speeds over 76 mph (123 km/h) or from [D] position to [1] position at speeds over 45 mph (73 km/h); you may damage the transmission.

4. Check for abnormal noise and clutch slippage in the following positions.

[1] (1st Gear) Position

Accelerate from a stop at full throttle. Check that there is no abnormal noise or clutch slippage. Upshifts should not occur in this position.

[2] (2nd Gear) Position

Accelerate from a stop at full throttle. Check that there is no abnormal noise or clutch slippage. Upshifts and downshifts should not occur in this position.

[3/M] (3rd Gear) Position

Shift to [3/M] position, then start the car in 1st or 2nd gear and shift to 3rd gear with the shift switch. Accelerate at full throttle. Check that there is no abnormal noise or clutch slippage.

[R] (Reverse) Position

Accelerate from a stop at full throttle, and check for abnormal noise and clutch slippage.

5. Test in [P] (Parking) Position.
Park the vehicle on a slope (approx. 16°) and apply the parking brake, then shift into [P] position. Release the brake; the vehicle should not move.

Stall Speed

Test

CAUTION:
- **To prevent transmission damage, do not test stall speed for more than 10 seconds at a time.**
- **Do not move the shift lever while raising the engine speed.**
- **Be sure to remove the pressure gauge before testing stall speed.**

1. Engage the parking brake and block all four wheels.
2. Connect a tachometer to the engine (or use the PGM Tester), then start the engine.
3. Make sure the A/C switch is OFF.
4. After the engine has warmed up to normal operating temperature (the cooling fan comes on), shift into [2] position.
5. Fully depress the brake pedal and accelerator for 6 to 8 seconds, and note engine speed.
6. Allow 2 minutes for cooling, then repeat same test in [1], [D] and [R] positions.

NOTE:
- Stall speed tests should be used for diagnostic purposes only.
- Stall speed should be the same in [1], [2], [D] and [R] positions.

Stall Speed RPM: Specification: 2,100 rpm
Service Limit: 1,950 - 2,250 rpm

TROUBLE	PROBABLE CAUSE
Stall rpm high in [2] position	• Low fluid level or ATF pump output • Clogged ATF strainer • Pressure regulator valve stuck closed • Slippage of 2nd clutch
Stall rpm high in [1] position	• Slippage of 1st clutch or 1st-hold clutch
Stall rpm high in [D] position	• Slippage of 1st clutch or 1st gear one-way clutch
Stall rpm high in [R] position	• Slippage of 4th clutch
Stall rpm low in [2] position	• Engine output low • Torque converter one-way clutch slipping

Fluid Level

Checking/Changing

Checking

NOTE: Check the fluid level with the engine at normal operating temperature (the cooling fan comes on).

1. Park the vehicle on level ground. Turn off the engine.
2. Remove the dipstick (yellow loop) from the transmission, and wipe it with a clean cloth.

   NOTE: Check the transmission fluid 60 to 90 seconds after shutting off the engine.
3. Insert the dipstick into the transmission.
4. Remove the dipstick, and check the fluid level. It should be between the upper and lower marks.
5. If the level is below the lower mark, pour the recommended fluid* into the tube to bring it to the upper mark.
6. Insert the dipstick back into the transmission.

Changing

1. Bring the transmission up to operating temperature by driving the vehicle. Park the vehicle on level ground, turn the engine off, then remove drain plug.
2. Reinstall the drain plug with a new washer, then refill the transmission with the recommended fluid* to the full mark on the dipstick.

Automatic Transmission Fluid Capacity:
2.9 ℓ (3.1 US qt., 2.6 Imp. qt.) at change
7.0 ℓ (7.4 US qt., 6.2 Imp. qt.) after overhaul
6.3 ℓ (6.7 US qt., 5.5 Imp. qt.) after overhaul with new torque converter.

Recommended Automatic Transmission Fluid
Genuine Honda Premium Formula Automatic Transmission Fluid (ATF)*

*Always use Genuine Honda Premium Formula Automatic Transmission Fluid (ATF).
Using a non-Honda ATF can affect shift quality.

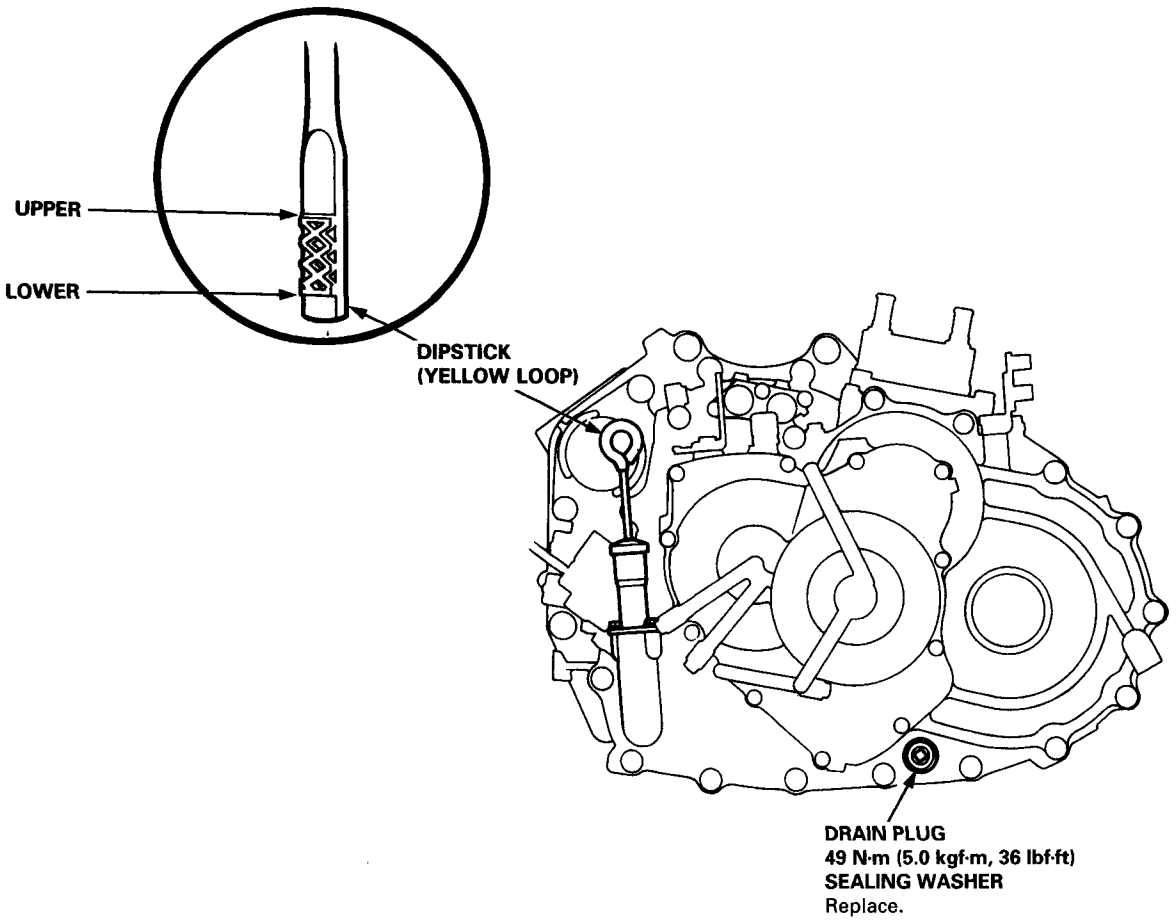

Pressure Testing

⚠ WARNING

- **While testing, be careful of the rotating rear wheels.**
- **Make sure lifts are placed properly (see section 1).**

CAUTION:

- **Before testing, be sure the transmission fluid is filled to the proper level.**
- **Warm up the engine before testing.**

1. Raise the vehicle (see section 1).
2. Warm up the engine, then stop the engine and connect a tachometer.
3. Connect a pressure gauge to each inspection hole. 18N-m(1.8kgf-m,13lbf-ft)

   CAUTION: Connect the pressure gauge securely; be sure not to allow dust and other foreign particles to enter the inspection hole.

A/T OIL PRESSURE GAUGE SET W/PANEL
07406-0020400

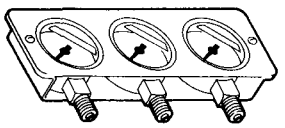

A/T OIL PRESSURE HOSE, 2210 mm
07MAJ - PY4011A
(4 Required)



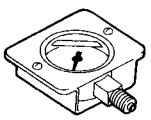

A/T LOW PRESSURE GAUGE W/PANEL
07406 - 0070300

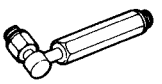

A/T OIL PRESSURE HOSE ADAPTER
07MAJ - PY40120
(4 Required)

4. Start the engine, and measure the respective pressure as follows.
   - Line Pressure/Clutch Pressure
   - Clutch Low/High Pressure
   - Throttle B Pressure
5. Install a new washer and the sealing bolt in the inspection hole, and tighten to the specified torque.
   Torque: 18 N-m (1.8 kgf-m, 13 lbf-ft)

   NOTE: Do not reuse old aluminum washers.

- Line Pressure/Clutch Pressure Measurement

1. Allow the rear wheels to rotate freely.
2. Run the engine at 2,000 rpm.
3. Shift the shift lever as shown on the chart on the next page.
4. Measure each clutch pressure.

⚠ WARNING **While testing, be careful of the rotating rear wheels.**

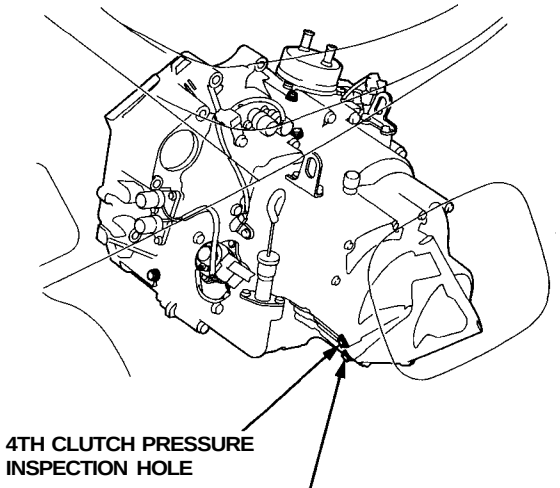

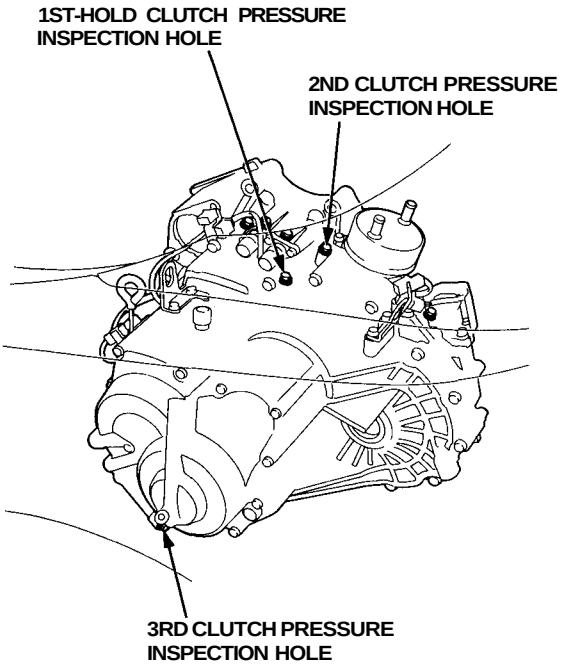

PRESSURE	SHIFT LEVER POSITION	SYMPTOM	PROBABLE CAUSE	FLUID PRESSURE	
				Standard	Service Limit
Line/1st Clutch	D or 1	No or low line/1st pressure	Torque converter, ATF pump pressure regulator, torque converter check valve, ATF pump, 1st Clutch	830 – 880 kPa (8.5 – 9.0 kgf/cm², 121 – 128 psi)	785 kPa (8.0 kgf/cm², 114 psi)
1st-hold Clutch	1	No or low 1st-hold pressure	1st-hold Clutch		
2nd Clutch	2	No or low 2nd pressure	2nd Clutch		
2nd Clutch	D	No or low 2nd pressure	2nd Clutch	490 kPa (5.0 kgf/cm², 71 psi) (throttle fully closed) 880 kPa (9.0 kgf/cm², 128 psi) (throttle more than 3/16 opened)	440 kPa (4.5 kgf/cm², 64 psi) (throttle fully closed) 785 kPa (8.0 kgf/cm², 114 psi) (throttle more than 3/16 opened)
3rd Clutch		No or low 3rd pressure	3rd Clutch		
4th Clutch		No or low 4th pressure	4th Clutch		
	R		Servo valve or 4th Clutch	830 – 880 kPa (8.5 – 9.0 kgf/cm², 121 – 128 psi)	785 kPa (8.0 kgf/cm², 114 psi)

(cont'd)

Pressure Testing

(cont'd)

- Clutch Low/High Pressure Measurement

⚠ WARNING While testing, be careful of the rotating rear wheels.

1. Allow the rear wheels to rotate freely.
2. Start the engine and let it idle.
3. Shift to [D] position.
4. Slowly press down the accelerator pedal to increase engine rpm until pressure is indicated on the oil pressure gauge. Then release the accelerator pedal, allowing the engine return to an idle, and measure the pressure reading.
5. With the engine idling, press down the accelerator pedal approximately 1/2 of its possible travel and increase the engine rpm until pressure is indicated on the gauge. Note the highest pressure reading obtained.
6. Repeat steps 4 and 5 for each clutch pressure being inspected.

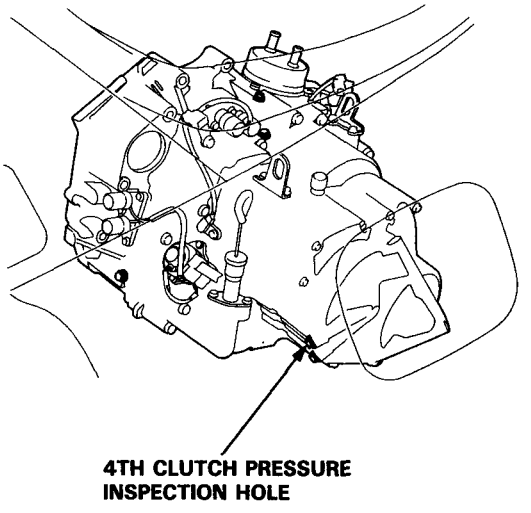

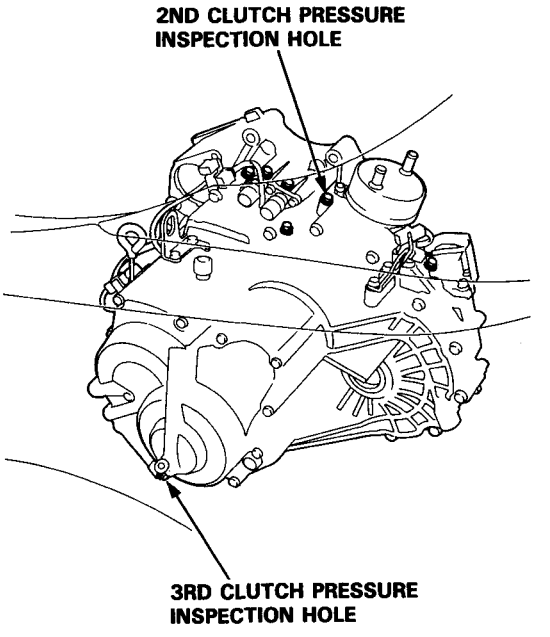

PRESSURE	SHIFT LEVER POSITION	SYMPTOM	PROBABLE CAUSE	FLUID PRESSURE	
				Standard	Service Limit
2nd Clutch	[D]	No or low 2nd pressure	2nd Clutch	490 – 880 kPa (5.0 – 9.0 kgf/cm², 71 – 128 psi) varies with throttle opening	440 kPa (4.5 kgf/cm², 64 psi) with accelerator pedal released 785 kPa (8.0 kgf/cm², 114 psi) with accelerator pedal more than 3/16 opened
3rd Clutch		No or low 3rd pressure	3rd Clutch		
4th Clutch		No or low 4th pressure	4th Clutch		

- Throttle B Pressure Measurement

⚠ WARNING While testing, be careful of the rotating rear wheels.

1. Allow the rear wheels to rotate freely.
2. Disconnect the linear solenoid connector.
3. Shift to [D] position.
4. Run the engine at 2,000 rpm.
5. Measure fully opened throttle B pressure.
6. Connect battery voltage to the linear solenoid terminal of the connector.
7. Measure fully closed throttle B pressure.

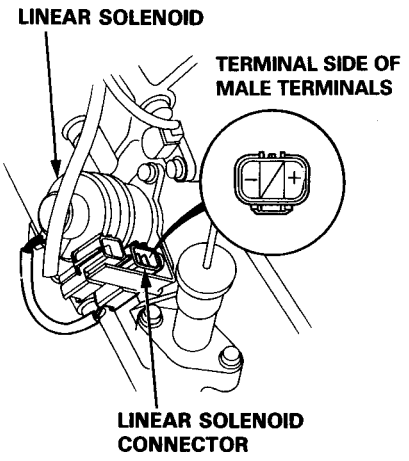

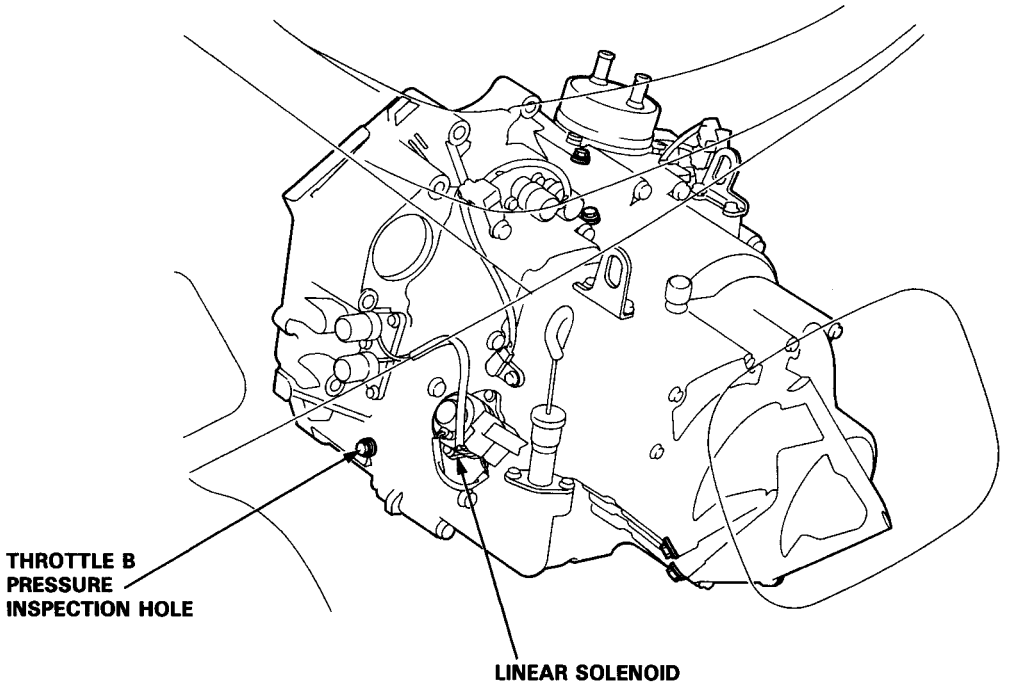

PRESSURE	SHIFT LEVER POSITION	SYMPTOM	PROBABLE CAUSE	FLUID PRESSURE	
				Standard	Service Limit
Throttle B	[D]	Pressure too high	Linear Solenoid	0 – 15 kPa (0 – 0.15 kgf/cm², 0 – 2 psi)	0 – 15 kPa (0 – 0.15 kgf/cm², 0 – 2 psi)
		No or low pressure	Faulty throttle B valve	600 – 660 kPa (6.1 – 6.7 kgf/cm², 87 – 95 psi)	600 – 660 kPa (6.1 – 6.7 kgf/cm², 87 – 95 psi)

Transmission

Removal

⚠WARNING Make sure lifts are placed properly, and hoist brackets are attached to correct position (see section 1).

CAUTION: Use fender covers to avoid damaging painted surfaces.

1. Check and record the rear camber (see section 18).
2. Disconnect the battery negative (-) first, and positive (+) cable from the battery.
3. Drain automatic transmission fluid (ATF). Reinstall the drain plug with a new washer.

   NOTE: Removing the ATF dipstick (yellow loop) will allow the ATF to drain more rapidly.
4. Remove the strut bar.
5. Remove the air cleaner housing.
6. Remove the connectors from the control box, and remove the control box (see section 11).

   CAUTION: Do not remove the vacuum tubes from the control box.
7. Remove the wire harness holder, disconnect the vehicle speed sensor (VSS) wire connectors, solenoid valve wire connectors, starter motor cables and transmission ground cable.
8. Remove the ATF cooler as it is connected by the hoses.

   CAUTION: Do not remove the hoses from the ATF cooler.
9. Remove the starter motor mounting bolts, then remove the starter motor.
10. Remove the transmission housing bolts and the transmission mounting bolts.

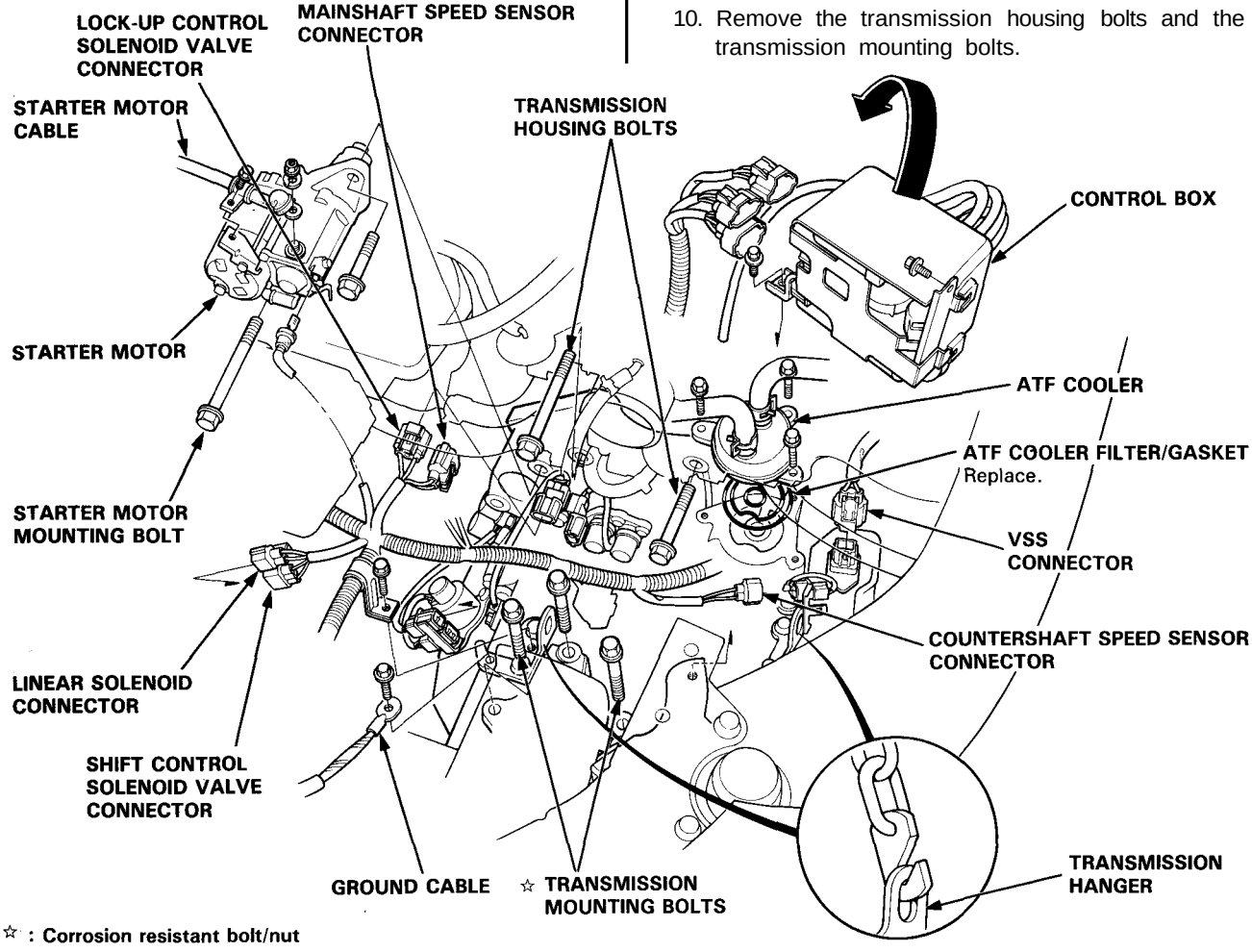

☆ : Corrosion resistant bolt/nut

11. Remove the parking brake cable holders from the rear beam rod.
12. Remove the rear beam rod.
13. Remove the front exhaust pipe A.

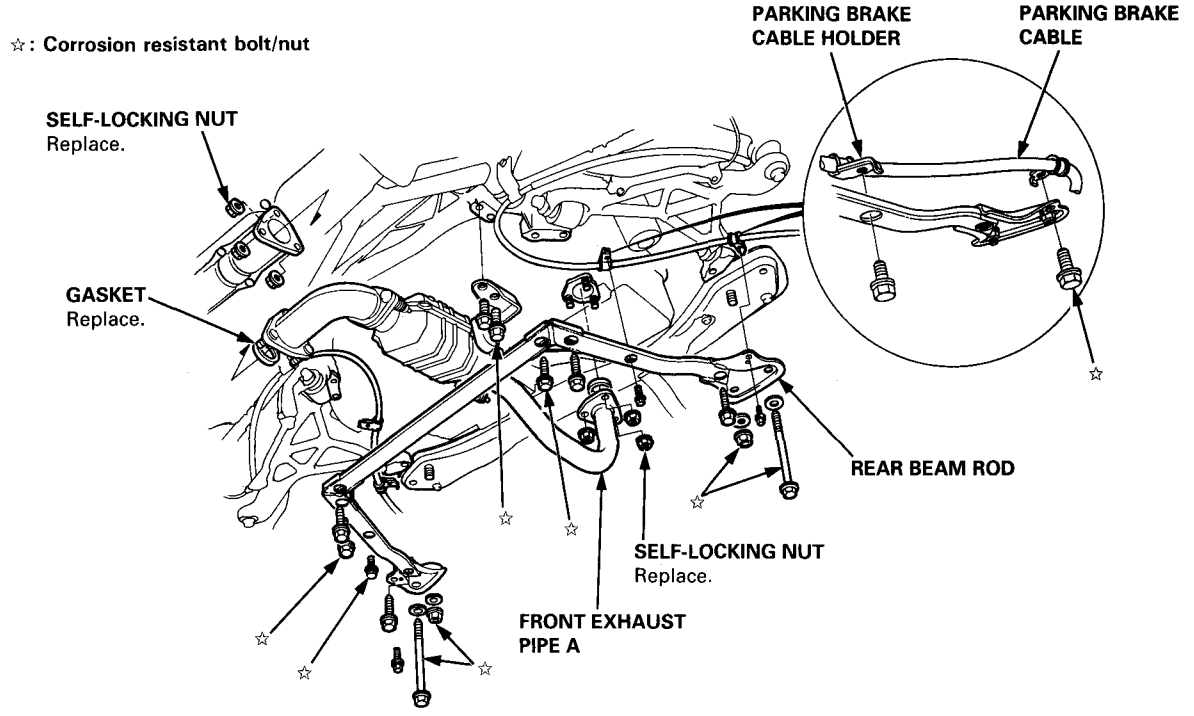

14. Remove the parking brake cable holder and the wheel sensor wire clamp.
1 5. Make a reference mark on the flange of the adjusting bolt, adjusting cam and lower control arm.
16. Separate the toe control arm from the side beam.
17. Remove the damper fork bolt.
18. Separate the lower control arm from the side beam.
19. Remove the right driveshaft from the intermediate shaft.

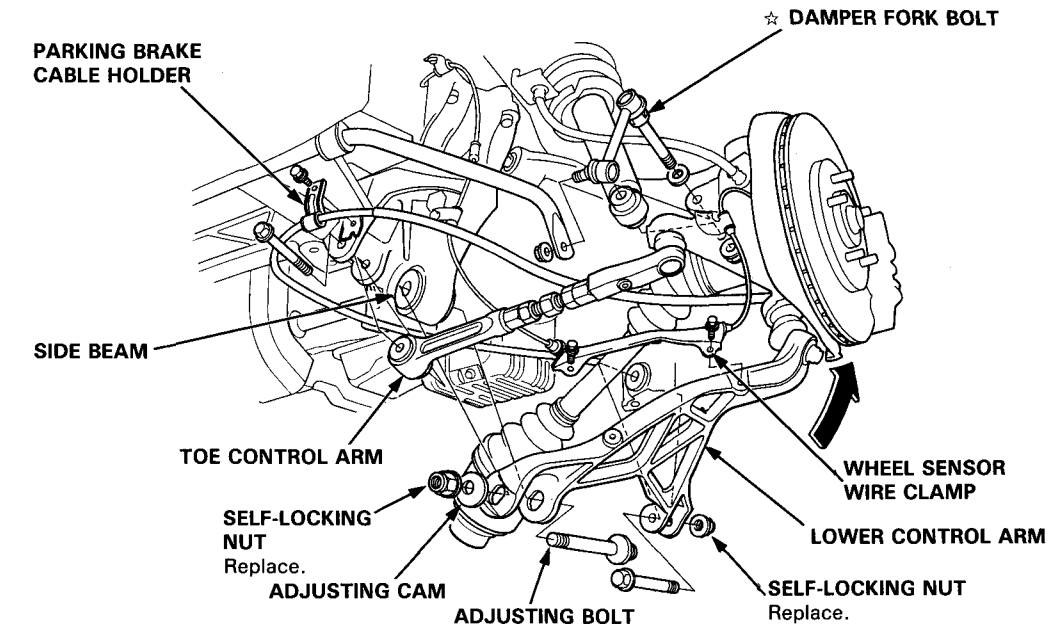

(cont'd)

Removal(cont'd)

20. Remove the intermediate shaft heat shield cover and the intermediate shaft mounting bolts.
21. Pry the intermediate shaft out of the differential. Pull and remove it.
    NOTE:
    - Coat all precision finished surfaces with clean engine oil.
    - Tie a plastic bag over the intermediate shaft end.

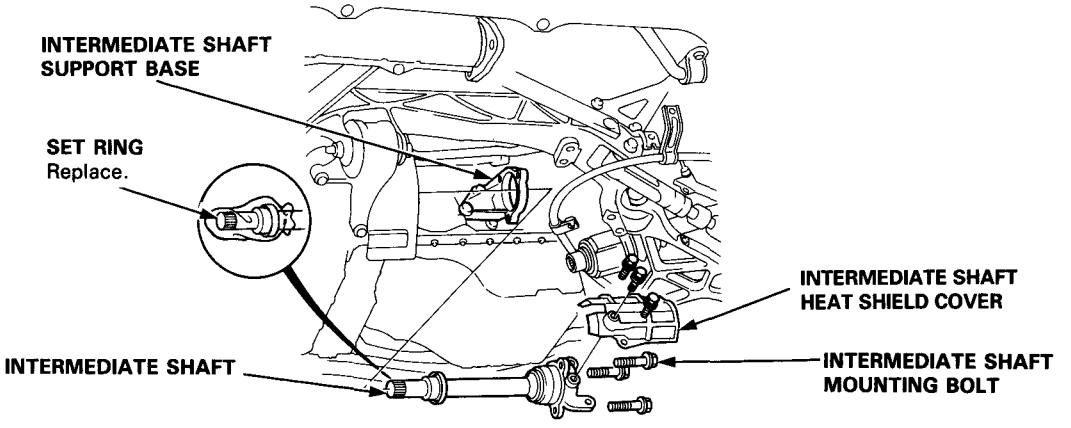

22. Remove the parking brake cable holder and the wheel sensor wire clamp.
23. Make a reference mark on the flange of the adjusting bolt, adjusting cam and lower control arm.
24. Separate the toe control arm from the side beam.
25. Remove the damper fork bolt.
26. Separate the lower control arm from the side beam.
27. Pry the left driveshaft out of the differential. Pull and remove it.
    NOTE:
    - Coat all precision finished surfaces with clean engine oil.
    - Tie a plastic bag over the driveshaft end.

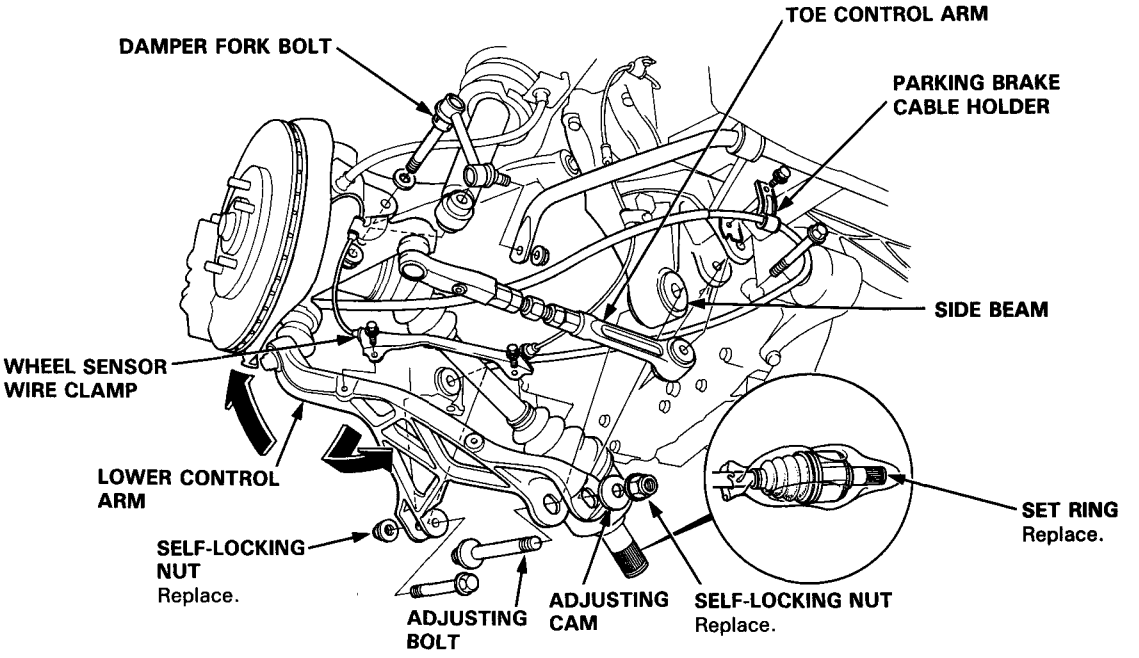

28. Remove the one upper arm mounting bolt shown.
29. Remove the shift cable cover and shift cable holder.
30. Remove the shift cable from the control lever.
31. Remove the torque converter cover, then remove the drive plate bolts.

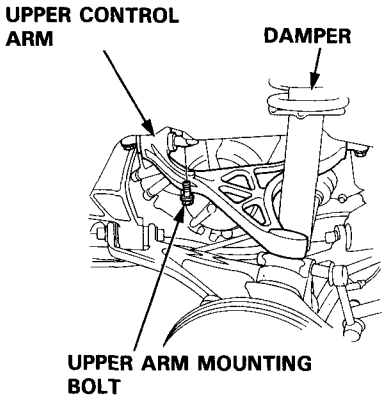

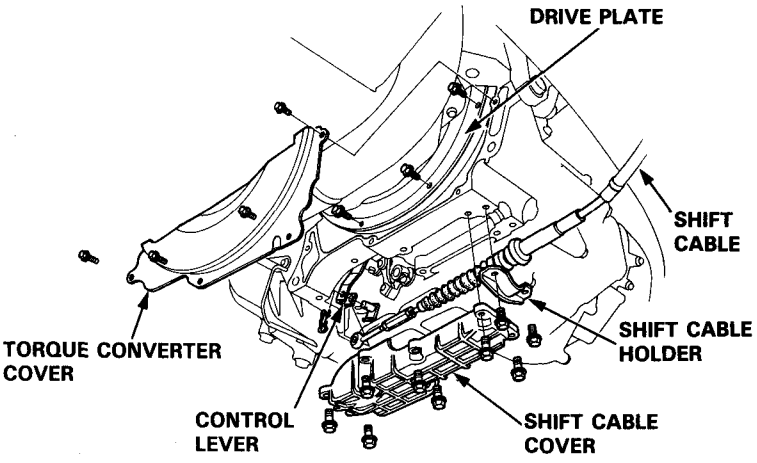

32. Attach a chain hoist to the transmission hangers.
33. Place a jack under the transmission, and raise the transmission just enough to take weight off of the mounts.
34. Remove the front engine mounting bolts on the transmission side, and retighten the bolt on the engine side.
    CAUTION: Loosen the front engine mounting bolt on the engine side, but do not remove it. After removing the two bolts on the transmission side, be sure to retighten the bolt on the engine side.
35. Remove the rear transmission mounting bolts.
36. Remove the transmission housing mounting bolts.
37. Pull the transmission away from the engine until it clears the dowel pins, then lower it on the transmission jack.

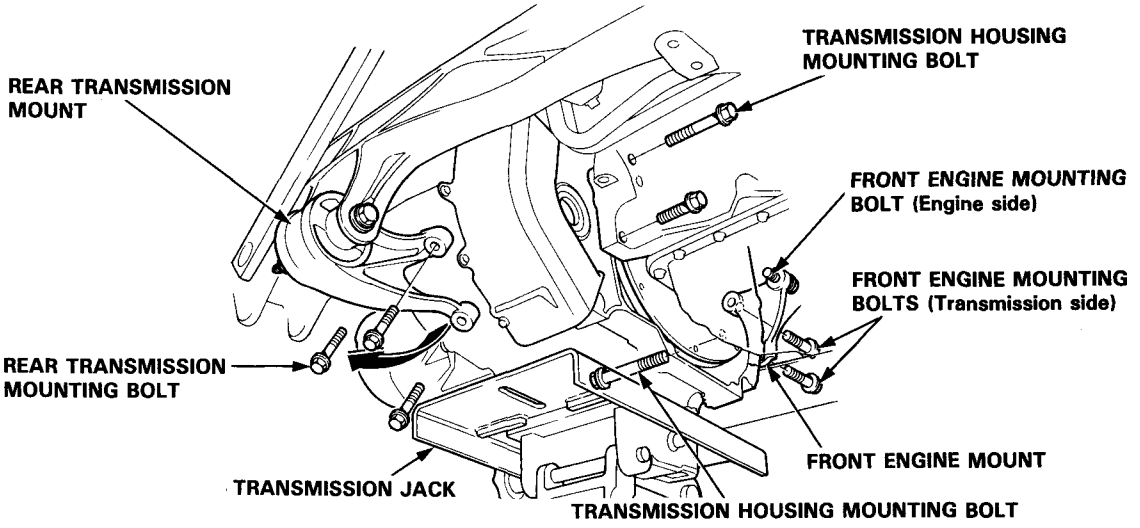

Illustrated Index

Left Side Cover/Transmission

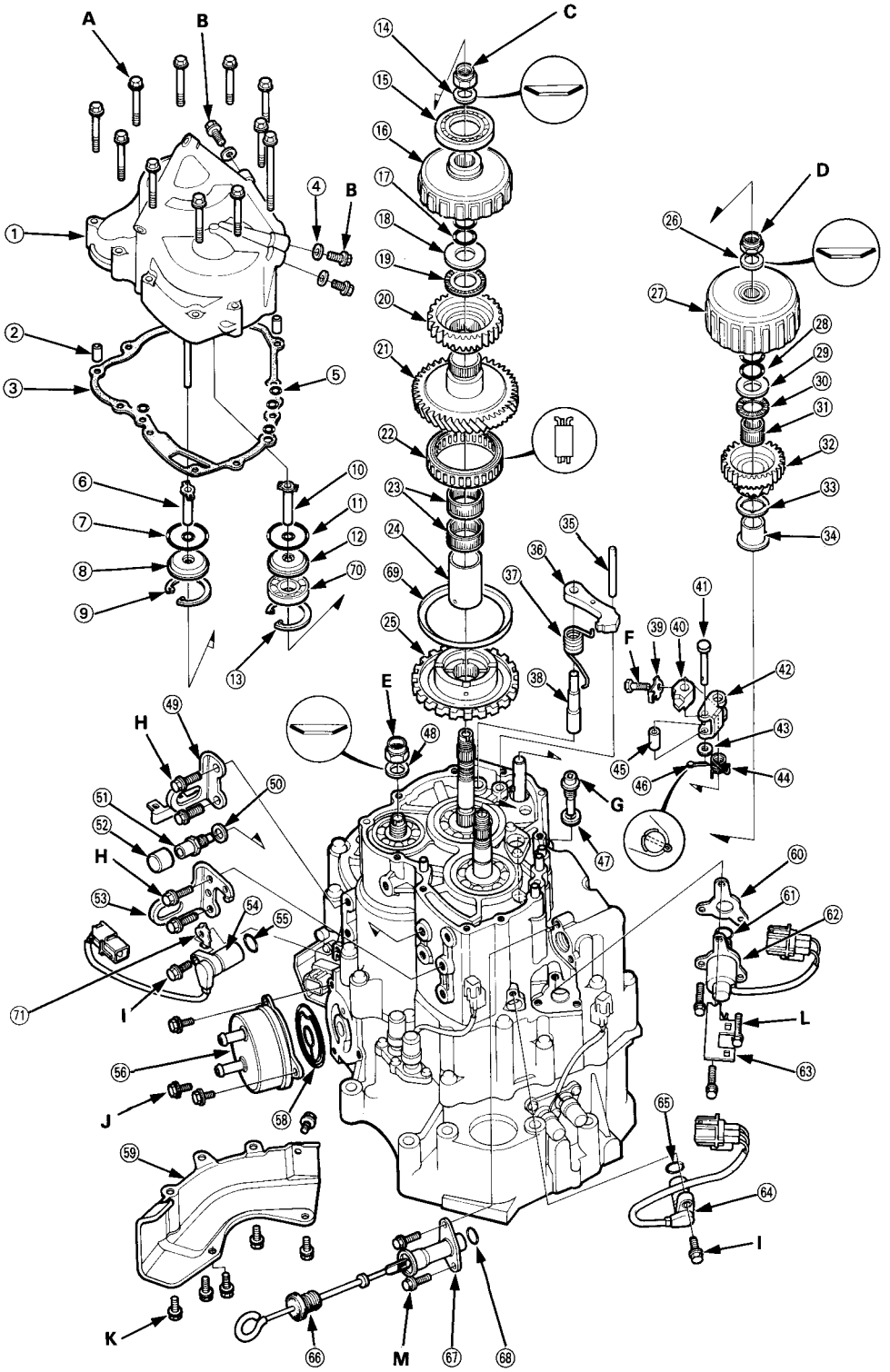

① **LEFT SIDE COVER**
② **DOWEL PIN**
③ **GASKET** Replace.
④ **SEALING WASHER** Replace.
⑤ **O-RING** Replace.
⑥ **1ST-HOLD CLUTCH FEED PIPE**
⑦ **O-RING** Replace.
⑧ **FEED PIPE FLANGE**
⑨ **SNAP RING**
⑩ **1ST CLUTCH FEED PIPE**
⑪ **O-RING** Replace.
⑫ **FEED PIPE FLANGE**
⑬ **SNAP RING**
⑭ **CONICAL SPRING WASHER** Replace.
⑮ **BALL BEARING**
⑯ **1ST-HOLD CLUTCH ASSEMBLY**
⑰ **O-RING** Replace.
⑱ **THRUST WASHER**
⑲ **THRUST NEEDLE BEARING**
⑳ **1ST-HOLD CLUTCH HUB**
㉑ **COUNTERSHAFT 1ST GEAR**
㉒ **ONE-WAY CLUTCH**
㉓ **NEEDLE BEARINGS**
㉔ **COUNTERSHAFT 1ST GEAR COLLAR** Selective part
㉕ **PARKING GEAR**
㉖ **CONICAL SPRING WASHER** Replace.
㉗ **1ST CLUTCH ASSEMBLY**
㉘ **O-RING** Replace.
㉙ **THRUST WASHER**
㉚ **THRUST NEEDLE BEARING**
㉛ **NEEDLE BEARING**
㉜ **MAINSHAFT 1ST GEAR**
㉝ **THRUST WASHER**
㉞ **MAINSHAFT 1ST GEAR COLLAR**
㉟ **PARKING BRAKE PAWL STOPPER**
㊱ **PARKING BRAKE PAWL**
㊲ **PARKING BRAKE PAWL SPRING**
㊳ **PARKING BRAKE PAWL SHAFT**
㊴ **LOCK WASHER** Replace.
㊵ **PARKING BRAKE STOPPER** Selective part
㊶ **ROLLER PIN**
㊷ **PARKING BRAKE LEVER**
㊸ **WASHER**
㊹ **PARKING BRAKE SPRING**
㊺ **ROLLER**
㊻ **COTTER PIN** Replace.
㊼ **SEALING WASHER** Replace.
㊽ **CONICAL SPRING WASHER** Replace.
㊾ **TRANSMISSION HANGER/CONNECTOR STAY**
㊿ **SEALING WASHER** Replace.
(51) **BREATHER JOINT**
(52) **BREATHER CAP**
(53) **TRANSMISSION HANGER**
(54) **COUNTERSHAFT SPEED SENSOR**
(55) **O-RING** Replace.
(56) **ATF COOLER**
(58) **ATF COOLER FILTER/GASKET** Replace.
(59) **SPEED SENSOR COVER**
(60) **LINEAR SOLENOID SHIM** Selective part
(61) **O-RING** Replace.
(62) **LINEAR SOLENOID**
(63) **CONNECTOR STAY**
(64) **MAINSHAFT SPEED SENSOR**
(65) **O-RING** Replace.
(66) **ATF DIPSTICK**
(67) **ATF DIPSTICK PIPE**
(68) **O-RING** Replace.
(69) **RETAINER PLATE**
(70) **BALL BEARING**
(71) **COUNTERSHAFT SPEED SENSOR WASHER**

TORQUE SPECIFICATION

No.	TORQUE VALUE	BOLT SIZE	REMARKS
A	12 N·m (1.2 kgf·m, 8.7 lbf·ft)	6 x 1.0 mm	
B	18 N·m (1.8 kgf·m, 13 lbf·ft)	8 x 1.25 mm	OIL PRESSURE CHECK BOLT
C	137 N·m (14.0 kgf·m, 101 lbf·ft)	24 x 1.25 mm	COUNTERSHAFT LOCKNUT (Left-hand threads) Replace.
D	137 N·m (14.0 kgf·m, 101 lbf·ft)	23 x 1.25 mm	MAINSHAFT LOCKNUT Replace.
E	137 N·m (14.0 kgf·m, 101 lbf·ft)	24 x 1.25 mm	SECONDARY SHAFT LOCKNUT Replace.
F	14 N·m (1.4 kgf·m, 10 lbf·ft)	6 x 1.0 mm	
G	49 N·m (5.0 kgf·m, 36 lbf·ft)	18 x 1.5 mm	DRAIN PLUG
H	29 N·m (3.0 kgf·m, 22 lbf·ft)	8 x 1.25 mm	
I	12 N·m (1.2 kgf·m, 8.7 lbf·ft)	6 x 1.0 mm	
J	29 N·m (3.0 kgf·m, 22 lbf·ft)	8 x 1.25 mm	ATF COOLER BOLT
K	12 N·m (1.2 kgf·m, 8.7 lbf·ft)	6 x 1.0 mm	
L	9.8 N·m (1.0 kgf·m, 7.2 lbf·ft)	6 x 1.0 mm	LINEAR SOLENOID BOLT

Illustrated Index

Transmission Housing

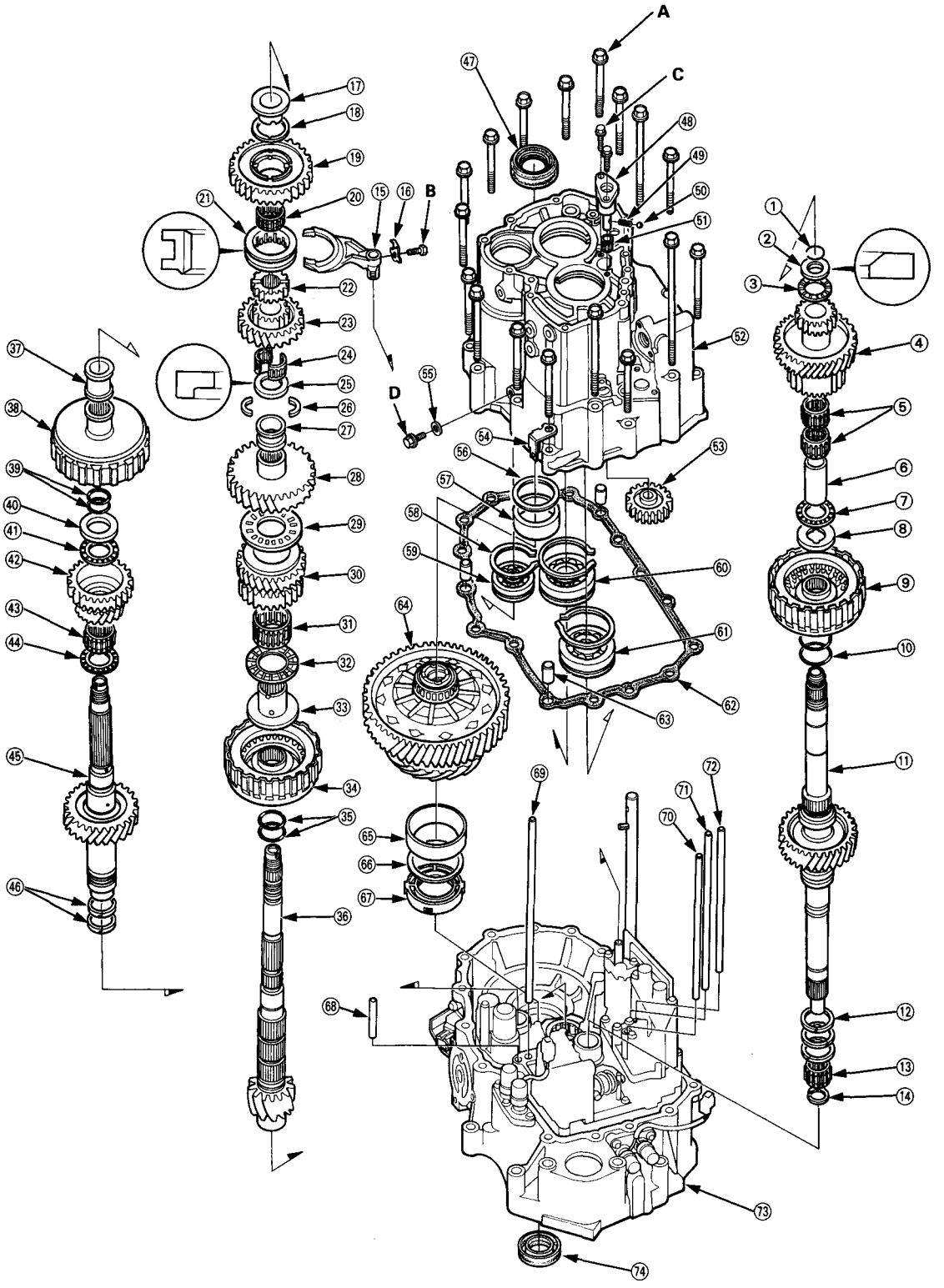

① **SNAP RING**
② **WASHER**
③ **THRUST NEEDLE BEARING**
④ **MAINSHAFT 4TH GEAR**
⑤ **NEEDLE BEARINGS**
⑥ **MAINSHAFT 4TH GEAR COLLAR**
⑦ **THRUST NEEDLE BEARING**
⑧ **THRUST WASHER**
⑨ **4TH CLUTCH ASSEMBLY**
⑩ **O-RING** Replace.
⑪ **MAINSHAFT**
⑫ **SEALING RING 37 mm**
⑬ **NEEDLE BEARING**
⑭ **SET RING**
⑮ **REVERSE SHIFT FORK**
⑯ **LOCK WASHER** Replace.
⑰ **COUNTERSHAFT REVERSE GEAR COLLAR**
⑱ **THRUST WASHER**
⑲ **COUNTERSHAFT REVERSE GEAR**
⑳ **NEEDLE BEARING**
㉑ **REVERSE SELECTOR**
㉒ **REVERSE SELECTOR HUB**
㉓ **COUNTERSHAFT 4TH GEAR**
㉔ **NEEDLE BEARING (Separate type)**
㉕ **COTTER RETAINER**
㉖ **COTTERS**
㉗ **COUNTERSHAFT 2ND GEAR SPACER**
㉘ **COUNTERSHAFT 2ND GEAR**
㉙ **THRUST NEEDLE BEARING**
㉚ **COUNTERSHAFT 3RD GEAR**
㉛ **NEEDLE BEARING**
㉜ **THRUST NEEDLE BEARING**
㉝ **COUNTERSHAFT 3RD GEAR COLLAR**
㉞ **3RD CLUTCH ASSEMBLY**
㉟ **O-RINGS** Replace.
㊱ **COUNTERSHAFT**
㊲ **SPACER 31 mm**
㊳ **2ND CLUTCH ASSEMBLY**
㊴ **O-RINGS** Replace.
㊵ **THRUST WASHER**
㊶ **THRUST NEEDLE BEARING**
㊷ **SECONDARY SHAFT 2ND GEAR**
㊸ **NEEDLE BEARING**
㊹ **THRUST NEEDLE BEARING**
㊺ **SECONDARY SHAFT**
㊻ **SEALING RINGS 35 mm**
㊼ **DIFFERENTIAL OIL SEAL** Replace.
㊽ **REVERSE IDLER GEAR SHAFT/HOLDER**
㊾ **REVERSE IDLER GEAR SHAFT SPRING**
㊿ **STEEL BALL (7/32) #7**
(51) **NEEDLE BEARING**
(52) **TRANSMISSION HOUSING**
(53) **REVERSE IDLER GEAR**
(54) **CONNECTOR STAY**
(55) **SEALING WASHER** Replace.
(56) **THRUST SHIM**
(57) **BEARING OUTER RACE**
(58) **SNAP RING**
(59) **SECONDARY SHAFT BALL BEARING**
(60) **COUNTERSHAFT BALL BEARING**
(61) **MAINSHAFT BALL BEARING**
(62) **GASKET** Replace.
(63) **DOWEL PIN**
(64) **DIFFERENTIAL ASSEMBLY**
(65) **BEARING OUTER RACE**
(66) **THRUST SHIM**
(67) **DIFFERENTIAL ATF GUIDE RING**
(68) **2ND CLUTCH FEED PIPE**
(69) **1ST-HOLD CLUTCH FEED PIPE**
(70) **4TH CLUTCH FEED PIPE**
(71) **1ST CLUTCH FEED PIPE**
(72) **3RD CLUTCH FEED PIPE**
(73) **TORQUE CONVERTER HOUSING**
(74) **DRIVESHAFT OIL SEAL** Replace.

TORQUE SPECIFICATION

No.	TORQUE VALUE	BOLT SIZE	REMARKS
A	54 N·m (5.5 kgf·m, 40 lbf·ft)	10 x 1.25 mm	
B	14 N·m (1.4 kgf·m, 10 lbf·ft)	6 x 1.0 mm	
C	12 N·m (1.2 kgf·m, 8.7 lbf·ft)	6 x 1.0 mm	
D	18 N·m (1.8 kgf·m, 13 lbf·ft)	8 x 1.25 mm	OIL PRESSURE CHECK BOLT

Illustrated Index

Torque Converter Housing/Valve Body

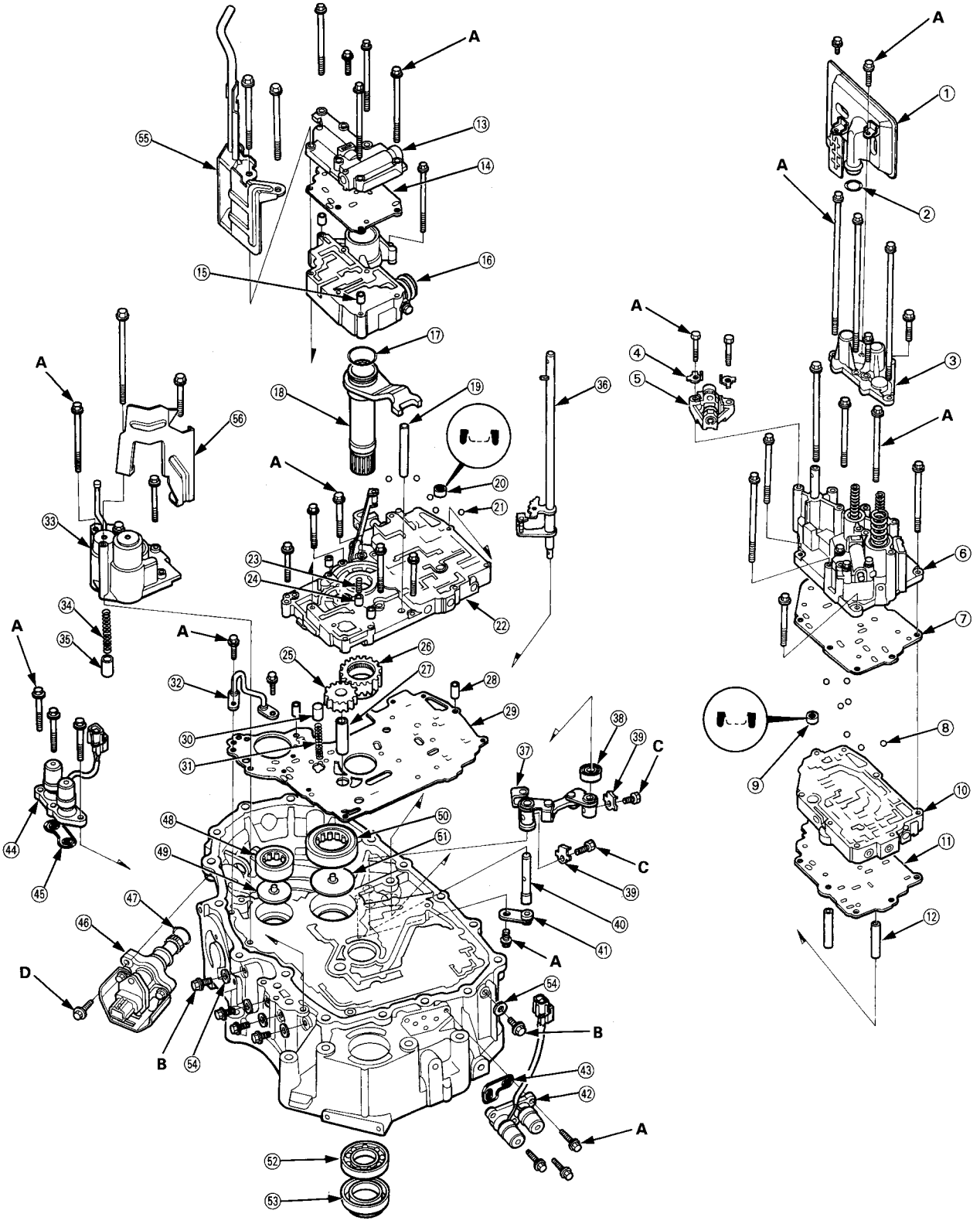

① **ATF STRAINER**
② **O-RING** Replace.
③ **ACCUMULATOR COVER**
④ **LOCK WASHER** Replace.
⑤ **SERVO DETENT BASE**
⑥ **SERVO BODY**
⑦ **SERVO SEPARATOR PLATE**
⑧ **CHECK BALLS (7/32) #7**
⑨ **SECONDARY VALVE BODY FILTER** Replace.
⑩ **SECONDARY VALVE BODY**
⑪ **SECONDARY SEPARATOR PLATE**
⑫ **DOWEL PIN**
⑬ **LOCK-UP VALVE BODY**
⑭ **LOCK-UP SEPARATOR PLATE**
⑮ **DOWEL PIN**
⑯ **REGULATOR VALVE BODY**
⑰ **O-RING** Replace.
⑱ **STATOR SHAFT ASSEMBLY**
⑲ **STOPPER PIN**
⑳ **MAIN VALVE BODY FILTER** Replace.
㉑ **CHECK BALLS (7/32) #7**
㉒ **MAIN VALVE BODY**
㉓ **ONE-WAY RELIEF VALVE SPRING**
㉔ **ONE-WAY RELIEF VALVE**
㉕ **ATF PUMP DRIVEN GEAR**
㉖ **ATF PUMP DRIVE GEAR**
㉗ **ATF PUMP DRIVEN GEAR SHAFT**
㉘ **DOWEL PIN**
㉙ **MAIN SEPARATOR PLATE**
㉚ **TORQUE CONVERTER CHECK VALVE**
㉛ **TORQUE CONVERTER CHECK VALVE SPRING**
㉜ **ATF LUBRICATION PIPE**
㉝ **2ND ACCUMULATOR BODY**
㉞ **LSD RELIEF VALVE SPRING**
㉟ **LSD RELIEF VALVE**
㊱ **CONTROL SHAFT**
㊲ **CONTROL LEVER**
㊳ **OIL SEAL** Replace.
㊴ **LOCK WASHER** Replace.
㊵ **CHANGE SHAFT**
㊶ **CHANGE SHAFT CAP**
㊷ **SHIFT CONTROL SOLENOID VALVE ASSEMBLY**
㊸ **SHIFT CONTROL SOLENOID FILTER/GASKET** Replace.
㊹ **LOCK-UP CONTROL SOLENOID VALVE ASSEMBLY**
㊺ **LOCK-UP CONTROL SOLENOID FILTER/GASKET** Replace.
㊻ **VEHICLE SPEED SENSOR ASSEMBLY**
㊼ **O-RING** Replace.
㊽ **SECONDARY SHAFT NEEDLE BEARING** Replace.
㊾ **ATF GUIDE PLATE** Replace.
㊿ **COUNTERSHAFT NEEDLE BEARING** Replace.
(51) **ATF GUIDE PLATE** Replace.
(52) **MAINSHAFT BALL BEARING** Replace.
(53) **MAINSHAFT OIL SEAL** Replace.
(54) **SEALING WASHER** Replace.
(55) **4TH ATF GUIDE PLATE/PIPE**
(56) **3RD ATF GUIDE PLATE**

TORQUE SPECIFICATION

No.	TORQUE VALUE	BOLT SIZE	REMARKS
A	12 N·m (1.2 kgf·m, 8.7 lbf·ft)	6 x 1.0 mm	
B	18 N·m (1.8 kgf·m, 13 lbf·ft)	8 x 1.25 mm	OIL PRESSURE CHECK BOLT
C	14 N·m (1.4 kgf·m, 10 lbf·ft)	6 x 1.0 mm	
D	29 N·m (3.0 kgf·m, 22 lbf·ft)	8 x 1.25 mm	

Left Side Cover

Removal

NOTE:
- Clean all parts thoroughly in solvent or carburetor cleaner, and dry with compressed air.
- Blow out all passages.
- Cut the lock tabs of each shaft locknut using a chisel, then remove the locknuts and conical spring washers from each shaft.
- Countershaft locknut has left-hand threads.

1. Remove the vehicle speed sensor (VSS) cover, then reinstall three bolts around the driveshaft oil seal.
   CAUTION: Do not damage the driveshaft oil seal lip.

2. Slip the special tool onto the mainshaft, and engage the parking brake pawl with the parking gear.

3. Remove the transmission left side cover in the following numbered sequence.
   NOTE: Remove the special tool from the mainshaft after removing the locknuts.

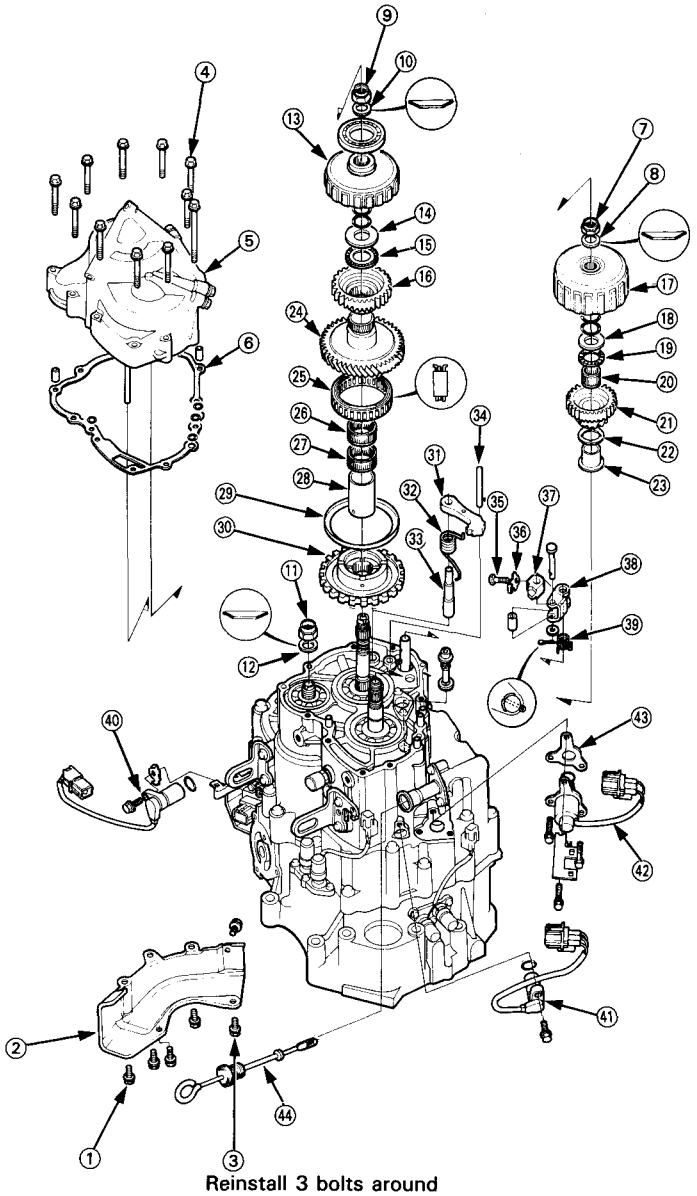

CAUTION: Protect the lip of the driveshaft oil seal by reinstalling three bolts, after removing the speed sensor cover.

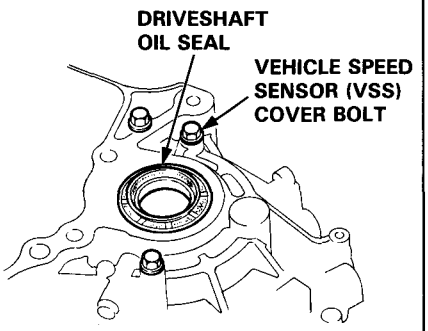

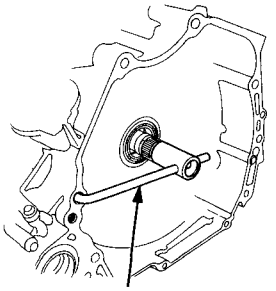

NOTE: Cut the lock tabs of each shaft locknut using a chisel, then remove the locknuts and conical spring washers.
CAUTION: Keep all of the chiseled particles out of the transmission.

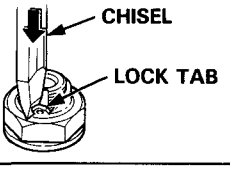

Transmission Housing

Removal

NOTE:
- Clean all parts thoroughly in solvent or carburetor cleaner, and dry with compressed air.
- Blow out all passages.
- The (7/32) #7 steel ball in the reverse idler gear shaft is under spring pressure. Take care not to let it pop out.

1. Remove the transmission housing in the following numbered sequence.

CAUTION: Set the special tool with bolts as shown.

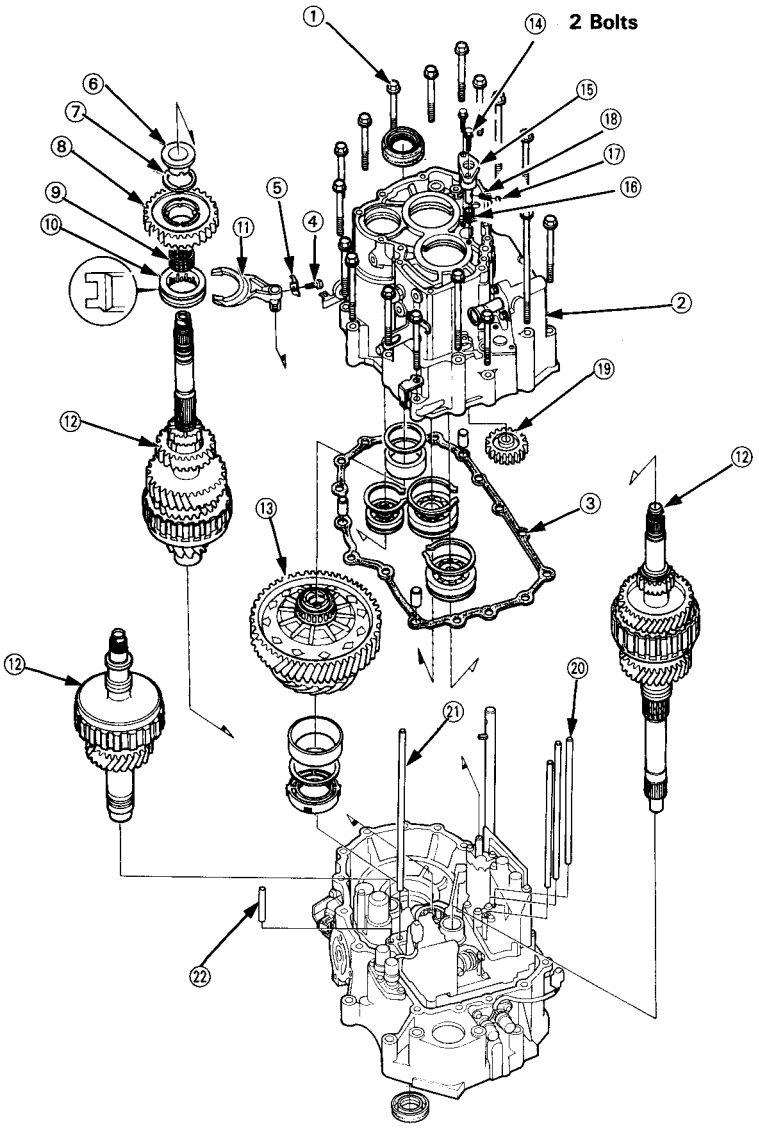

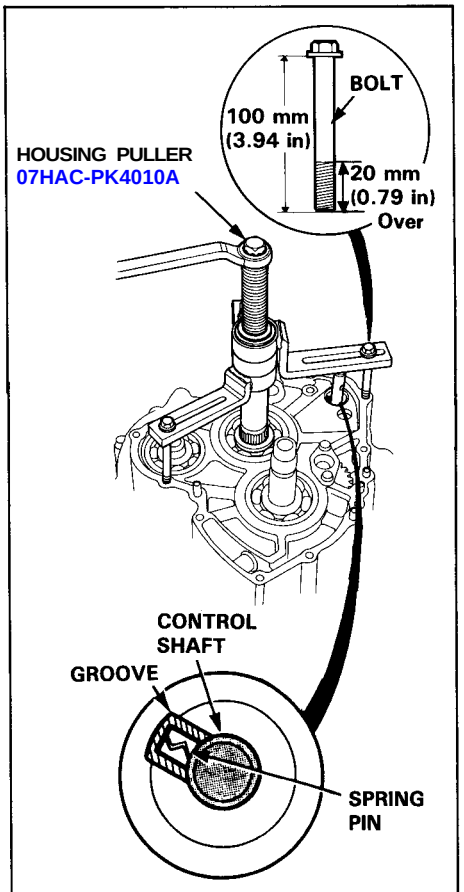

NOTE: Align the control shaft spring pin with the groove in the transmission housing.

⑫ NOTE: Remove three shafts together.

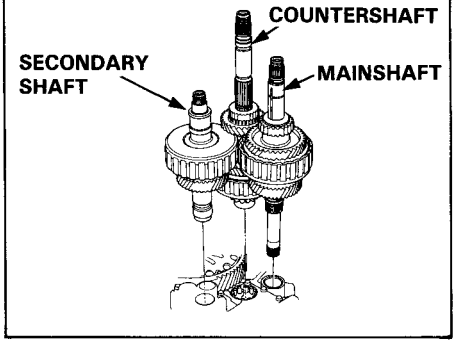

Valve Body

Removal

NOTE:
- Clean all parts thoroughly in solvent or carburetor cleaner, and dry with compressed air. Blow out all passages.
- Accumulator covers are spring loaded; to prevent stripping the threads in the torque converter housing, press down on the accumulator covers while unscrewing the bolts in a crisscross pattern.

1. Remove the valve body in the following numbered sequence.

CAUTION: Do not use a magnet to remove the check balls; it may magnetize the balls.

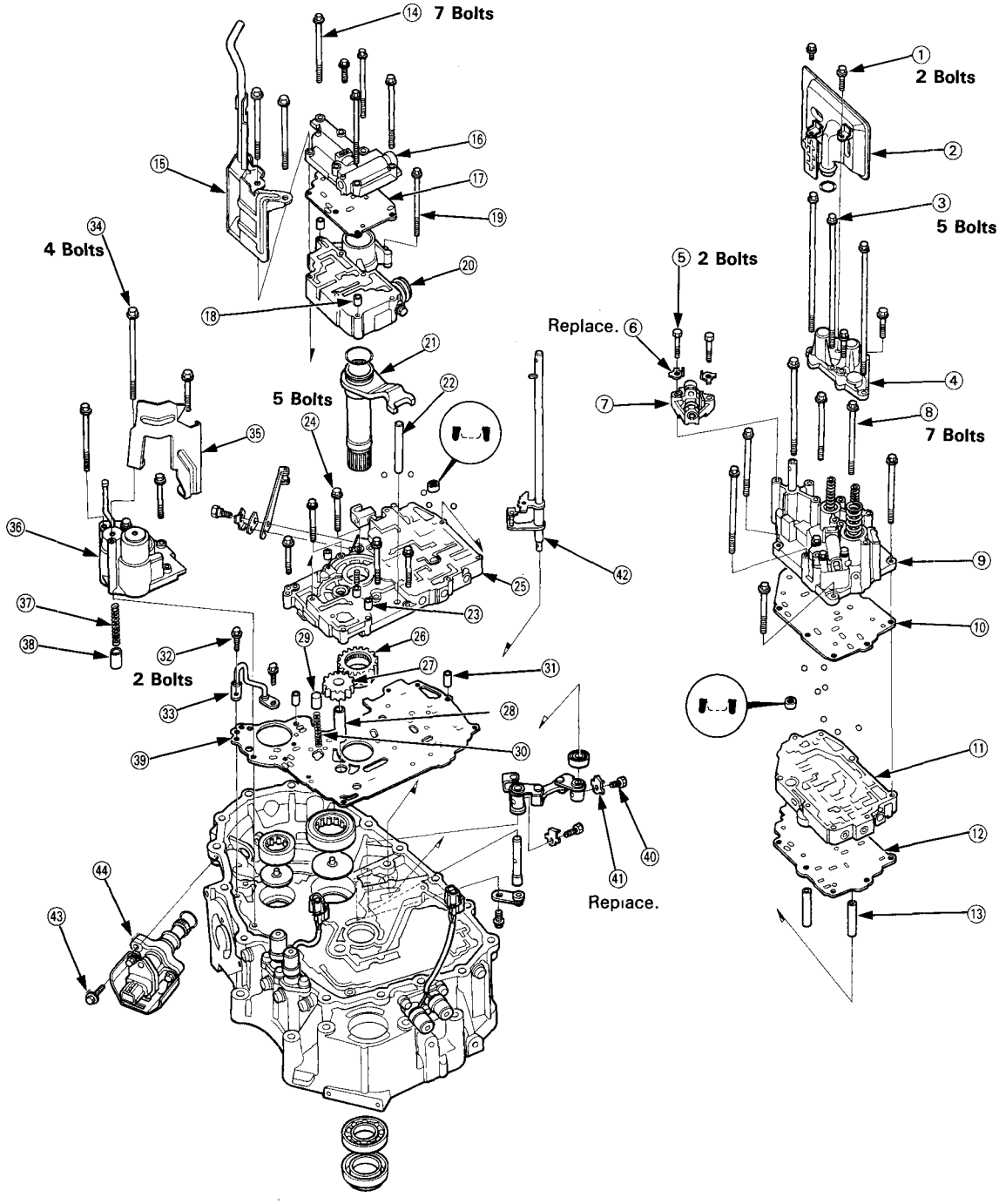

NOTE: This repair is only necessary if one or more of the valves in a valve body do not slide smoothly in their bores. Use this procedure to free the valves.

1. Soak a sheet of #600 abrasive paper in ATF for about 30 minutes.

2. Carefully tap the valve body so the sticking valve drops out of its bore.

CAUTION: It may be necessary to use a small screwdriver to pry the valve free. Be careful not to scratch the bore with the screwdriver.

3. Inspect the valve for any scuff marks. Use the ATF-soaked #600 paper to polish off any burrs that are on the valve, then wash the valve in solvent and dry it with compressed air.

4. Roll up half a sheet of ATF-soaked paper and insert it in the valve bore of the sticking valve.
Twist the paper slightly, so that it unrolls and fits the bore tightly, then polish the bore by twisting the paper as you push it in and out.

CAUTION: The valve body is aluminum and doesn't require much polishing to remove any burrs.

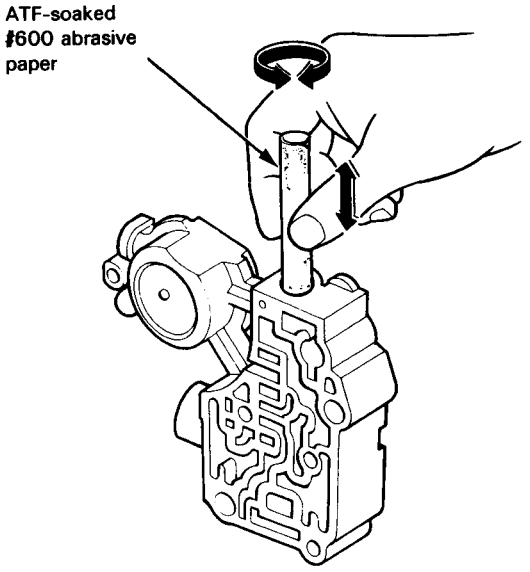

5. Remove the #600 paper and thoroughly wash the entire valve body in solvent, then dry with compressed air.

6. Coat the valve with ATF, then drop it into its bore. It should drop to the bottom of the bore under its own weight. If not, repeat step 4 and 5, then retest. If the valves still sticks, replace the valve body.

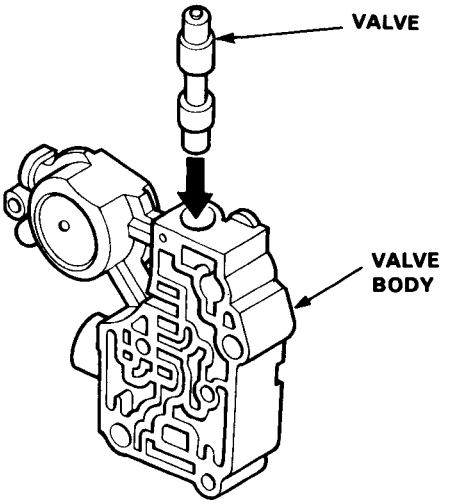

7. Remove the valve, and thoroughly clean it and the valve body with solvent. Dry all parts with compressed air, then reassemble using ATF as a lubricant.

Valve

Assembly

NOTE: Coat all parts with ATF before assembly.

- Install the valve, valve spring and cap in the valve body, then install the roller.

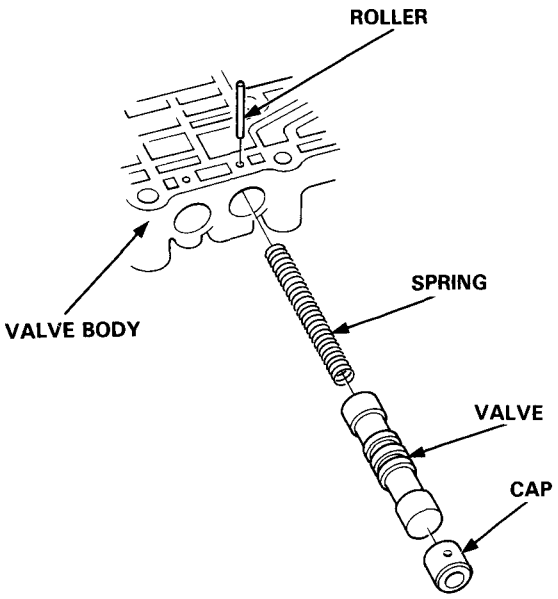

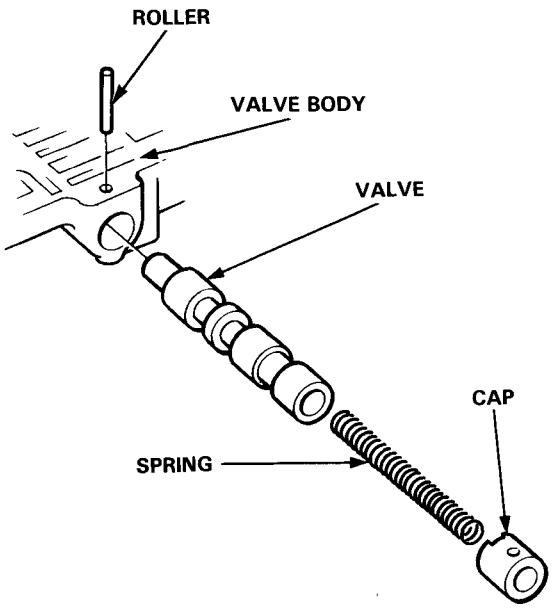

- Set the spring in the valve, and install it in the valve body. Push the spring in with a screwdriver, then install the spring seat.

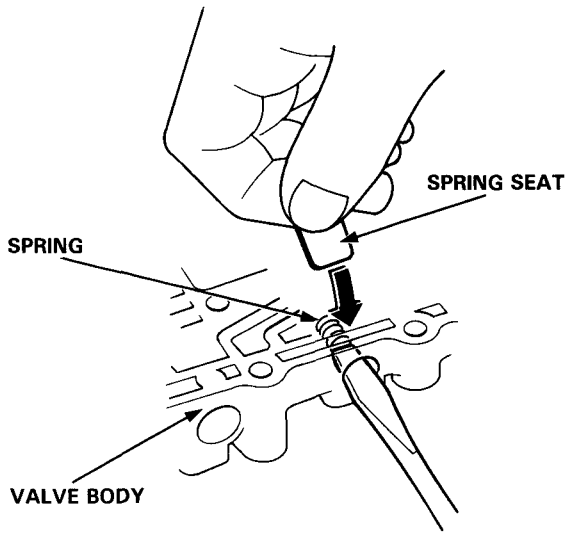

- Set the spring in the valve, and install it in the valve body. Install the spring with a screwdriver, then install the valve cap with the cutout aligned with the screwdriver.

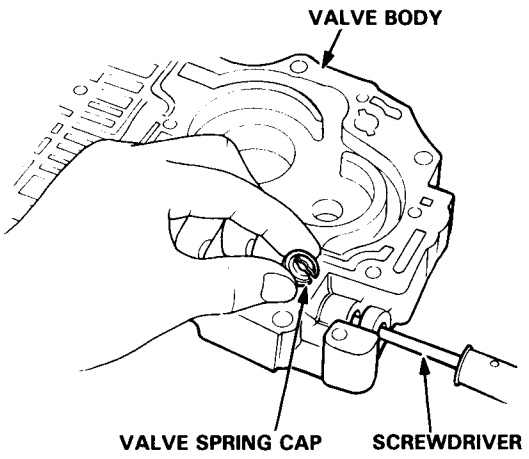

- Install the valve, spring and cap in the valve body. Push on the cap, then install the stopper seat.

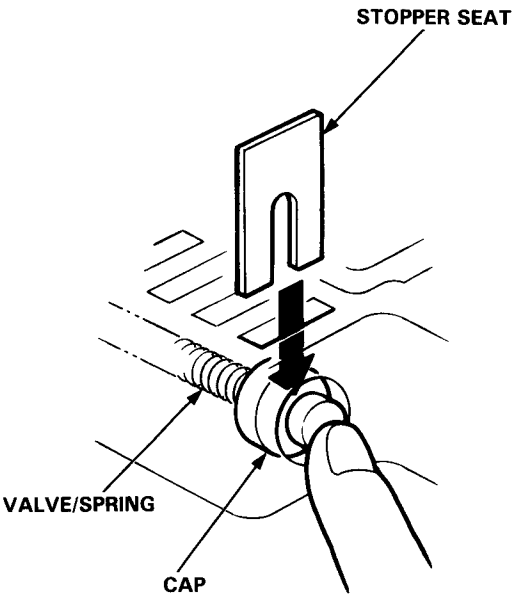

Valve Caps

Description

- Caps with one projected tip and one flat end are installed with the flat end toward the spring.
- Caps with a projected tip on each end are installed with the smaller tip toward the spring. The small tip is a spring guide.

Toward outside of valve body.

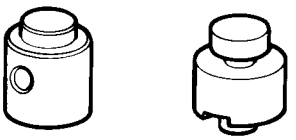

Toward spring.

- Caps with hollow ends are installed with the hollow end away from the spring.
- Caps with notched ends are installed with the notch toward the spring.
- Caps with flat ends and a hole through the center are installed with the smaller hole toward the spring.

Toward outside of valve body.

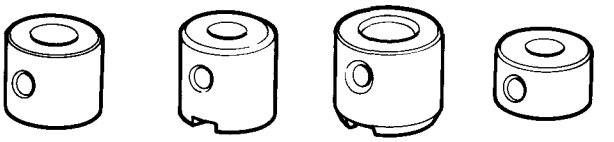

Toward spring.

- Caps with one projected tip and hollow end are installed with the tip toward the spring. The tip is a spring guide.

Toward outside of valve body.

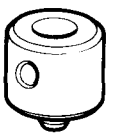

Toward spring.

- Caps with flat ends and a groove around the cap are installed with the groove side opposite the spring.

Toward outside of valve body.



Toward spring.

ATF Pump

Inspection

1. Install the pump gears and shaft in the main valve body.

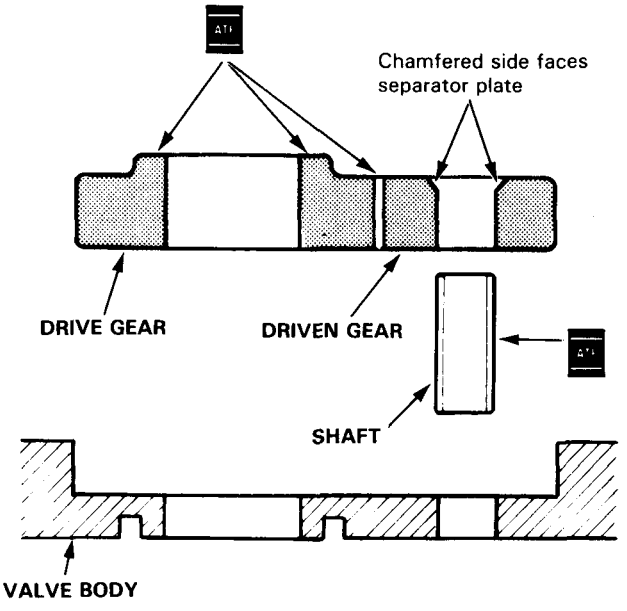

2. Measure the side clearance of the drive and driven gears.

Pump Gears Side (Radial) Clearance:
Standard (New): Drive gear (diameter)
0.210-0.265 mm
(0.0083-0.0104 in)
Driven gear (radius)
0.035-0.063mm
(0.0014-0.0025 in)

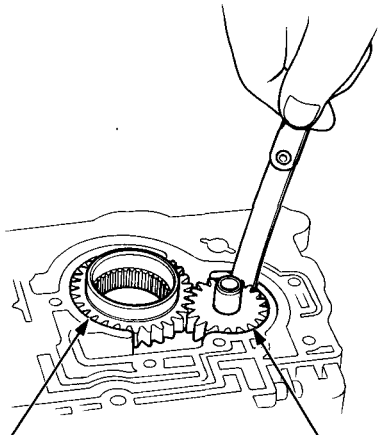

DRIVE GEAR
Inspect teeth for wear and damage.

DRIVEN GEAR
Inspect teeth for wear and damage.

3. Remove the shaft, then measure the thrust clearance of the driven gear-to-valve body.

Drive/Driven Gear thrust (Axial) Clearance:
Standard (New): 0.03-0.05 mm
(0.001-0.002 in.)
Service Limit: 0.07 mm (0.0028 in.)

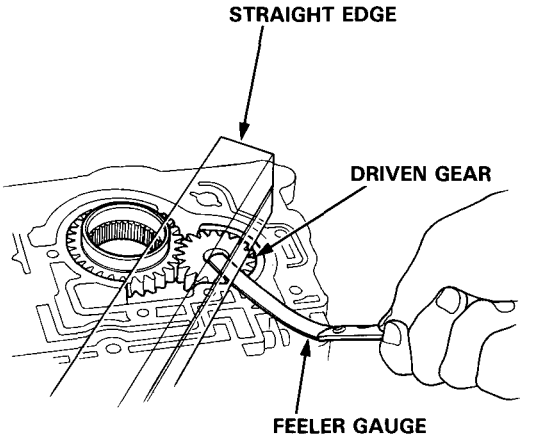

Main Valve Body

Disassembly/Inspection/Reassembly

NOTE:

- Clean all parts thoroughly in solvent or carburetor cleaner, and dry with compressed air.
- Blow out all passages.
- Replace valve body as an assembly if any parts are worn or damaged.
- Check all valves for free movement. If any fail to slide freely, see Valve Body Repair on page 14-123.
- Coat all parts with ATF before reassembly.
- Adjust and select the manual valve detent spring when the manual valve or manual valve detent spring is replaced. See page 14-160.

CAUTION: Do not use a magnet to remove the check balls; it may magnetize the balls.

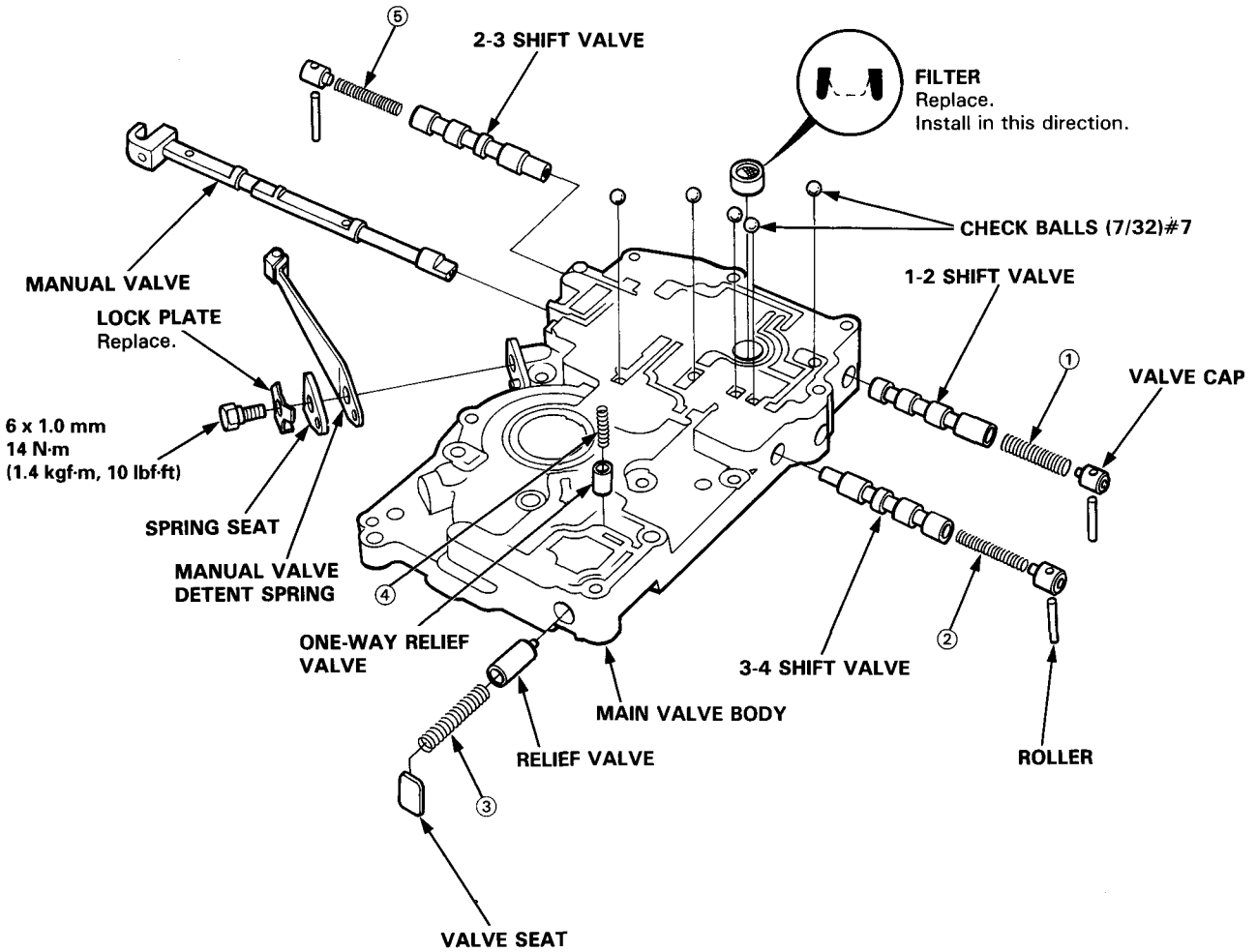

NOTE: All check balls are the same size (7/32) #7.

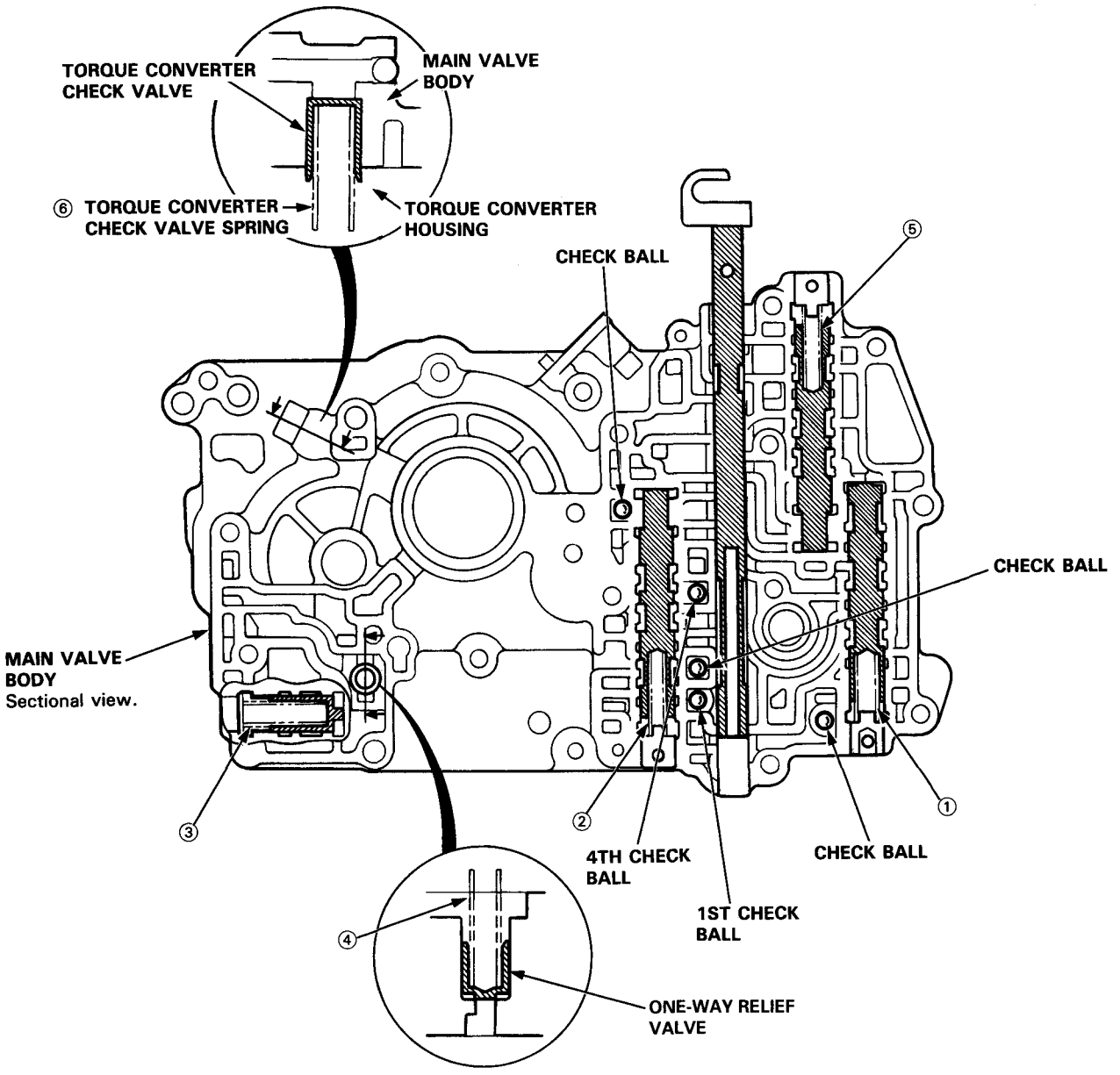

SPRING SPECIFICATIONS

Unit of length: mm (in)

No.	Spring	Standard (New)			
		Wire Dia.	O.D.	Free Length	No. of Coils
①	1-2 shift spring	0.9 (0.035)	8.6 (0.339)	40.4 (1.591)	14.5
②	3-4 shift spring	0.8 (0.031)	7.0 (0.276)	43.7 (1.720)	21.2
③	Relief valve spring	1.1 (0.043)	8.4 (0.331)	44.4 (1.748)	19.5
④	One-way relief valve spring	0.9 (0.035)	6.4 (0.252)	25.1 (0.988)	11.9
⑤	2-3 shift spring	0.8 (0.031)	7.0 (0.276)	43.7 (1.720)	21.2
⑥	Torque converter check valve spring	1.1 (0.043)	8.4 (0.331)	41.8 (1.646)	15.7

Secondary Valve Body

Disassembly/Inspection/Reassembly

NOTE:
- Clean all parts thoroughly in solvent or carburetor cleaner, and dry with compressed air.
- Blow out all passages.
- Replace valve body as an assembly if any parts are worn or damaged.
- Check all valves for free movement. If any fail to slide freely, see Valve Body Repair on page 14-123.
- Coat all parts with ATF before reassembly.

CAUTION: Do not use a magnet to remove the check balls; it may magnetize the balls.

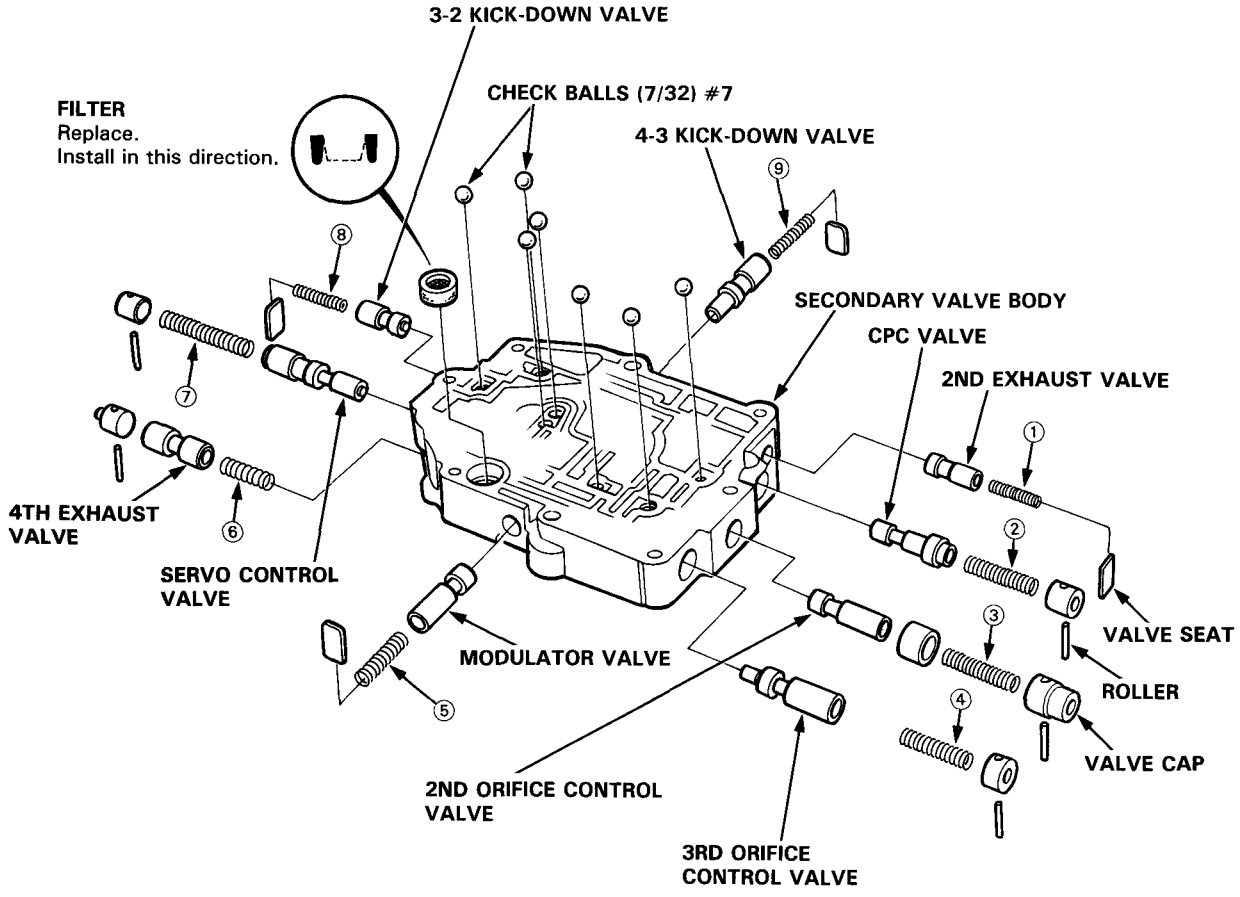

NOTE: All check balls are the same size (7/32) #7.

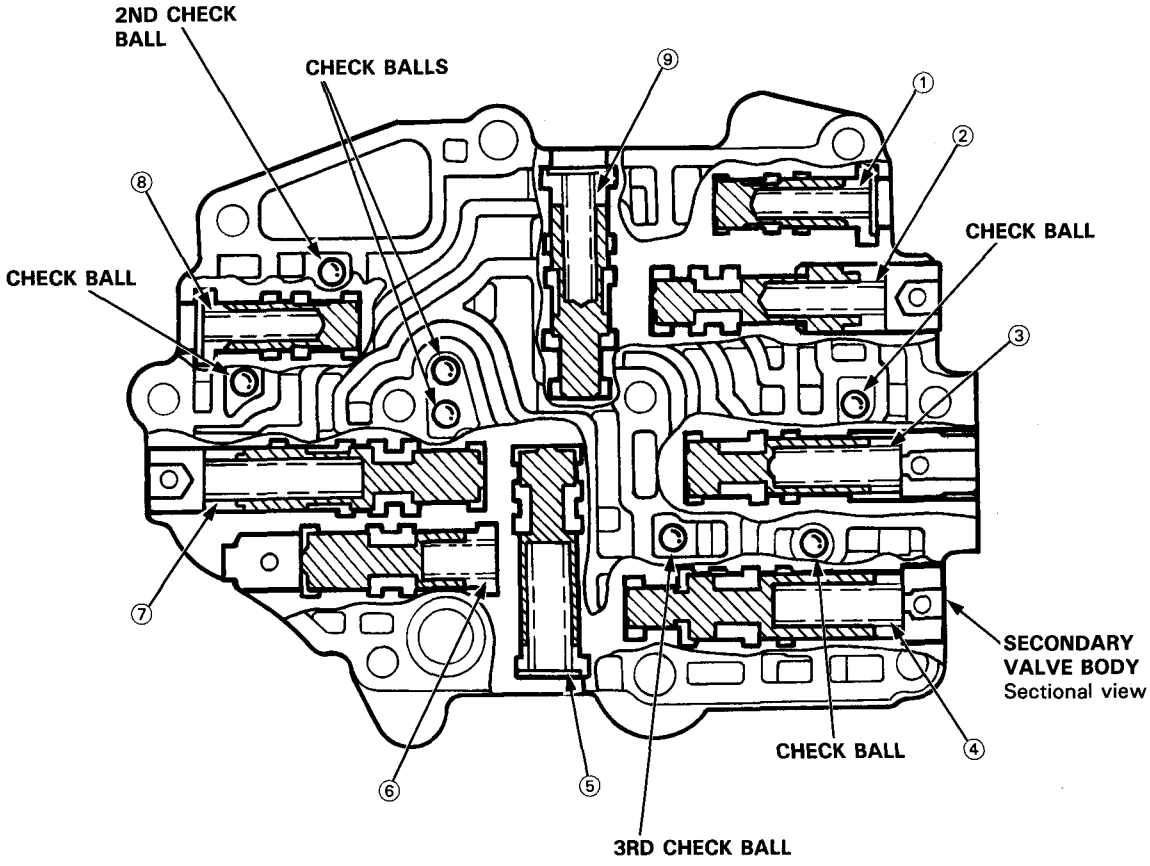

SPRING SPECIFICATIONS

Unit of length: mm (in)

No.	Spring	Standard (New)			
		Wire Dia.	O.D.	Free Length	No. of Coils
①	2nd exhaust valve spring	1.0 (0.039)	6.1 (0.240)	27.1 (1.067)	13.4
②	CPC valve spring	1.0 (0.039)	6.8 (0.268)	32.1 (1.264)	15.6
③	2nd orifice control valve spring	0.8 (0.031)	8.1 (0.319)	47.9 (1.886)	16.0
④	3rd orifice control valve spring	0.9 (0.035)	8.6 (0.339)	48.3 (1.902)	16.6
⑤	Modulator valve spring	1.4 (0.055)	9.4 (0.370)	33.0 (1.299)	10.5
⑥	4th exhaust valve spring	0.6 (0.024)	7.6 (0.299)	24.4 (0.961)	7.9
⑦	Servo control valve spring	1.0 (0.039)	8.1 (0.319)	53.5 (2.106)	20.8
⑧	3 – 2 kick-down valve spring	1.0 (0.039)	6.1 (0.240)	27.1 (1.067)	13.4
⑨	4 – 3 kick-down valve spring	0.9 (0.035)	6.6 (0.260)	30.7 (1.209)	12.9

Servo Body/Throttle Valve Body

Disassembly/Inspection/Reassembly

NOTE:

- Clean all parts thoroughly in solvent or carburetor cleaner, and dry with compressed air.
- Blow out all passages.
- Replace valve body as an assembly if any parts are worn or damaged.
- Check all valves for free movement. If any fail to slide freely, see Valve Body Repair on page 14-123.
- Coat all parts with ATF before reassembly.
- Replace the O-rings.

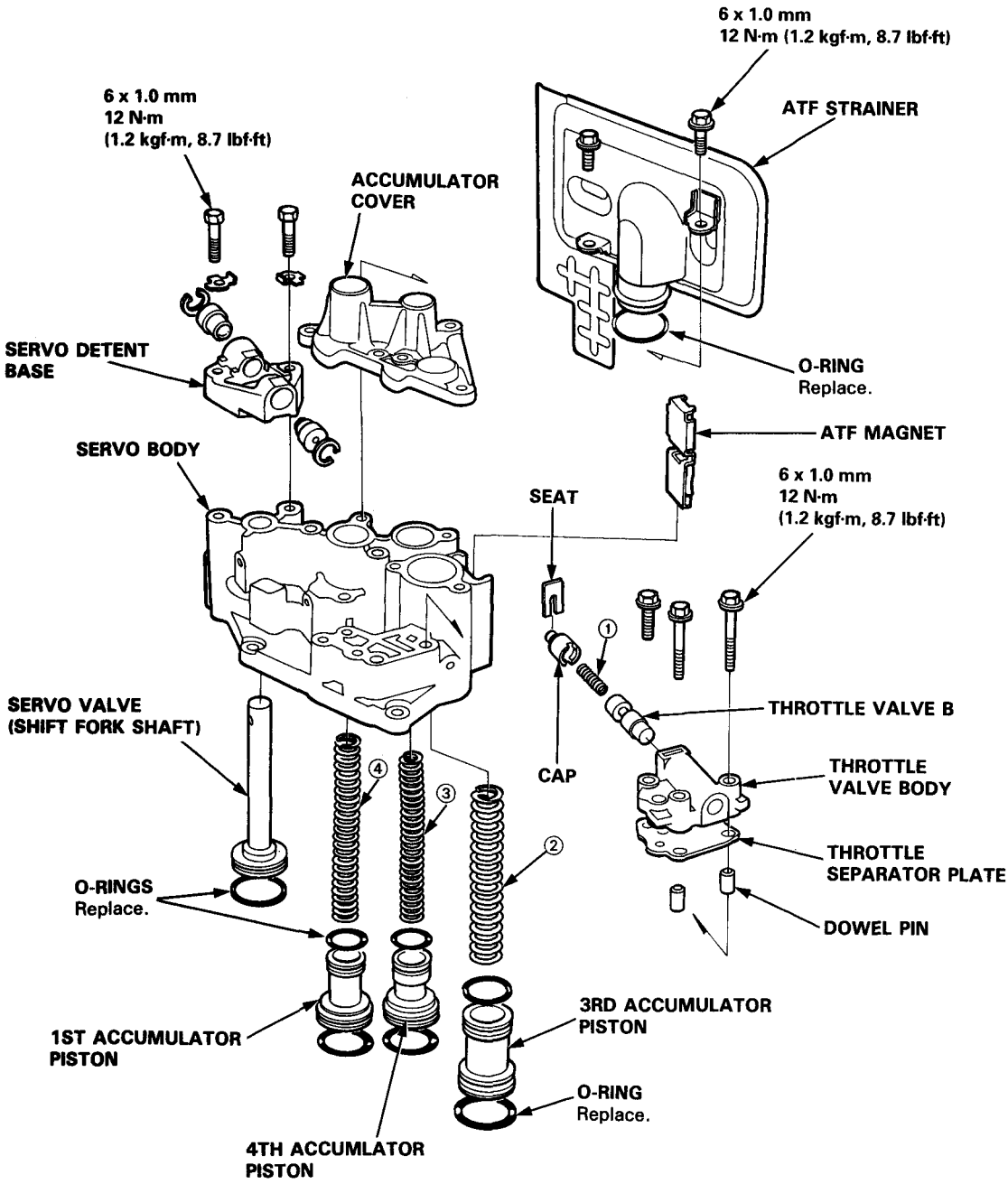

SPRING SPECIFICATIONS

Unit of length: mm (in)

No.	Spring	Standard (New)			
		Wire Dia.	O.D.	Free Length	No. of Coils
①	Throttle valve B spring	0.9 (0.035)	7.1 (0.280)	29.0 (1.142)	12.6
②	3rd accumulator spring	3.2 (0.126)	19.0 (0.748)	88.6 (3.488)	14.3
③	4th accumulator spring	3.0 (0.118)	18.0 (0.709)	84.5 (3.327)	12.8
④	1st accumulator spring	2.3 (0.091)	20.0 (0.787)	104.6 (4.118)	14.8

NOTE:
- After disassembly of the ATF strainer, check that it is in good condition, and the inlet opening is not clogged. Replace the strainer with a new one if it is clogged or damaged.
- The strainer can be reused if it is not clogged. Clean the inlet opening thoroughly with compressed air before reinstalling it.

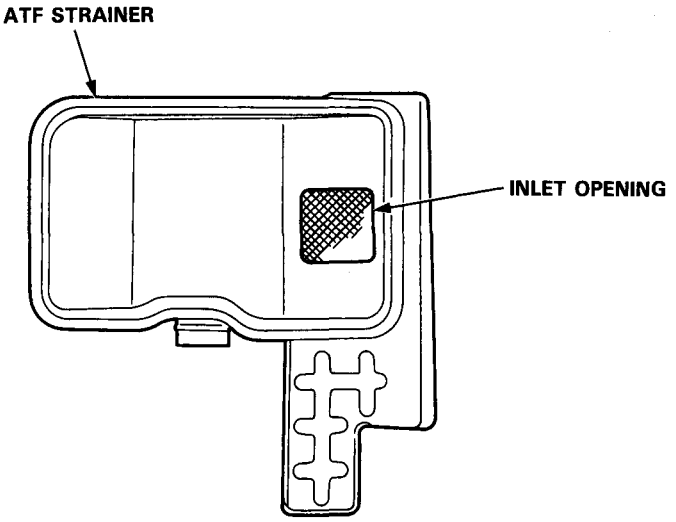

Regulator Valve Body

Disassembly/Inspection/Reassembly

NOTE:
- Clean all parts thoroughly in solvent or carburetor cleaner, and dry with compressed air.
- Blow out all passages.
- Replace valve body as an assembly if any parts are worn or damaged.
- Check all valves for free movement. If any fail to slide freely, see Valve Body Repair on page 14-123.

1. Hold the regulator spring cap in place while removing the lock bolt. Once the bolt is removed, release the spring cap slowly.

   CAUTION: The regulator spring cap can pop out when the lock bolt is removed.

2. Reassembly is the reverse of the disassembly procedure.

   NOTE:
   - Coat all parts with ATF.
   - Align the hole in the regulator spring cap with the hole in the valve body, press the spring cap into the body and tighten the lock bolt.

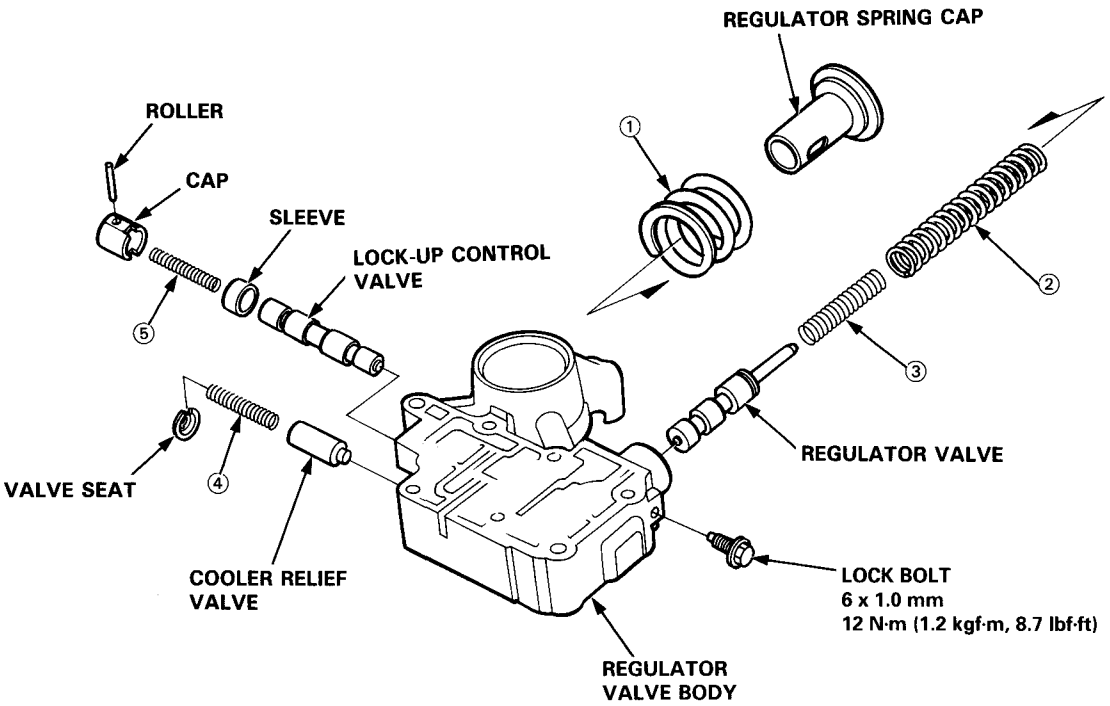

SPRING SPECIFICATIONS

Unit of length: mm (in)

No.	Spring	Standard (New)			
		Wire Dia.	O.D.	Free Length	No. of Coils
①	Stator reaction spring	6.0 (0.236)	38.4 (1.512)	30.3 (1.193)	2.0
②	Regulator valve spring A	1.58 x 2.0 (0.062 x 0.079)	14.7 (0.579)	88.6 (3.488)	20.9
③	Regulator valve spring B	1.8 (0.071)	9.6 (0.378)	44.0 (1.732)	14.7
④	Cooler relief valve spring	1.2 (0.047)	8.4 (0.331)	35.7 (1.406)	16.5
⑤	Lock-up control spring	0.8 (0.031)	6.6 (0.260)	38.3 (1.508)	25.0

Lock-up Valve Body

Disassembly/Inspection/Reassembly

NOTE:
- Clean all parts thoroughly in solvent or carburetor cleaner, and dry with compressed air.
- Blow out all passages.
- Replace valve body as an assembly if any parts are worn or damaged.
- Check all valves for free movement. If any fail to slide freely, see Valve Body Repair on page 14-123.
- Coat all parts with ATF before reassembly.

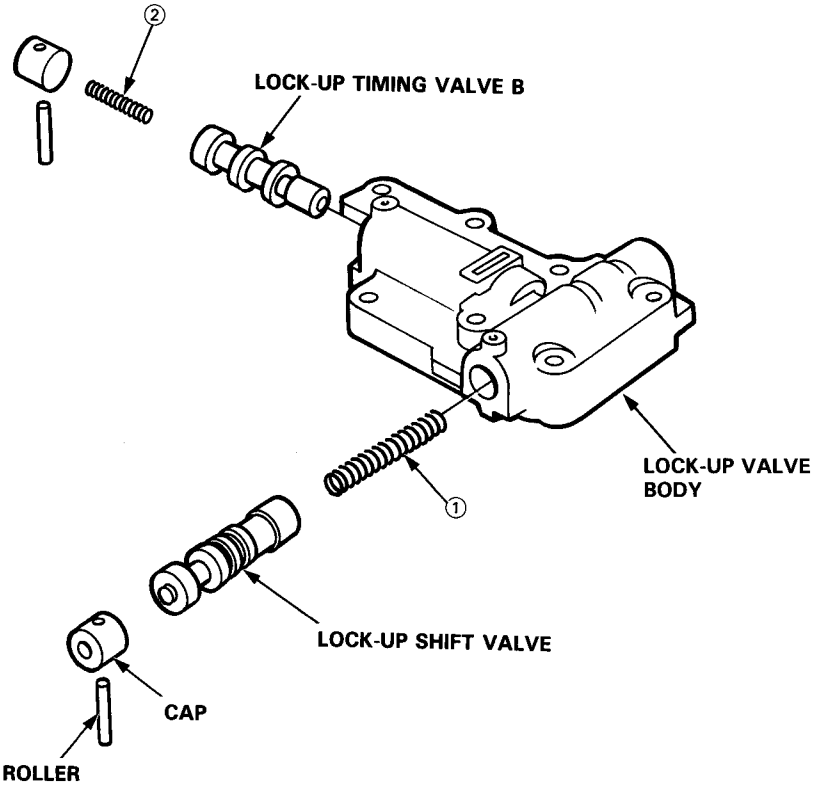

SPRING SPECIFICATIONS

Unit of length: mm (in)

No.	Spring	Standard (New)			
		Wire Dia.	O.D.	Free Length	No. of Coils
①	Lock-up shift valve spring	1.0 (0.039)	8.6 (0.339)	51.3 (2.020)	19.8
②	Lock-up timing valve B spring	0.8 (0.031)	5.6 (0.220)	27.8 (1.094)	16.4

2nd Accumulator Body

Disassembly/Inspection/Reassembly

NOTE:
- Clean all parts thoroughly in solvent or carburetor cleaner, and dry with compressed air.
- Blow out all passages.
- Replace valve body as an assembly if any parts are worn or damaged.
- Check all valves for free movement. If any fail to slide freely, see Valve Body Repair on page 14-123.
- Coat all parts with ATF before reassembly.

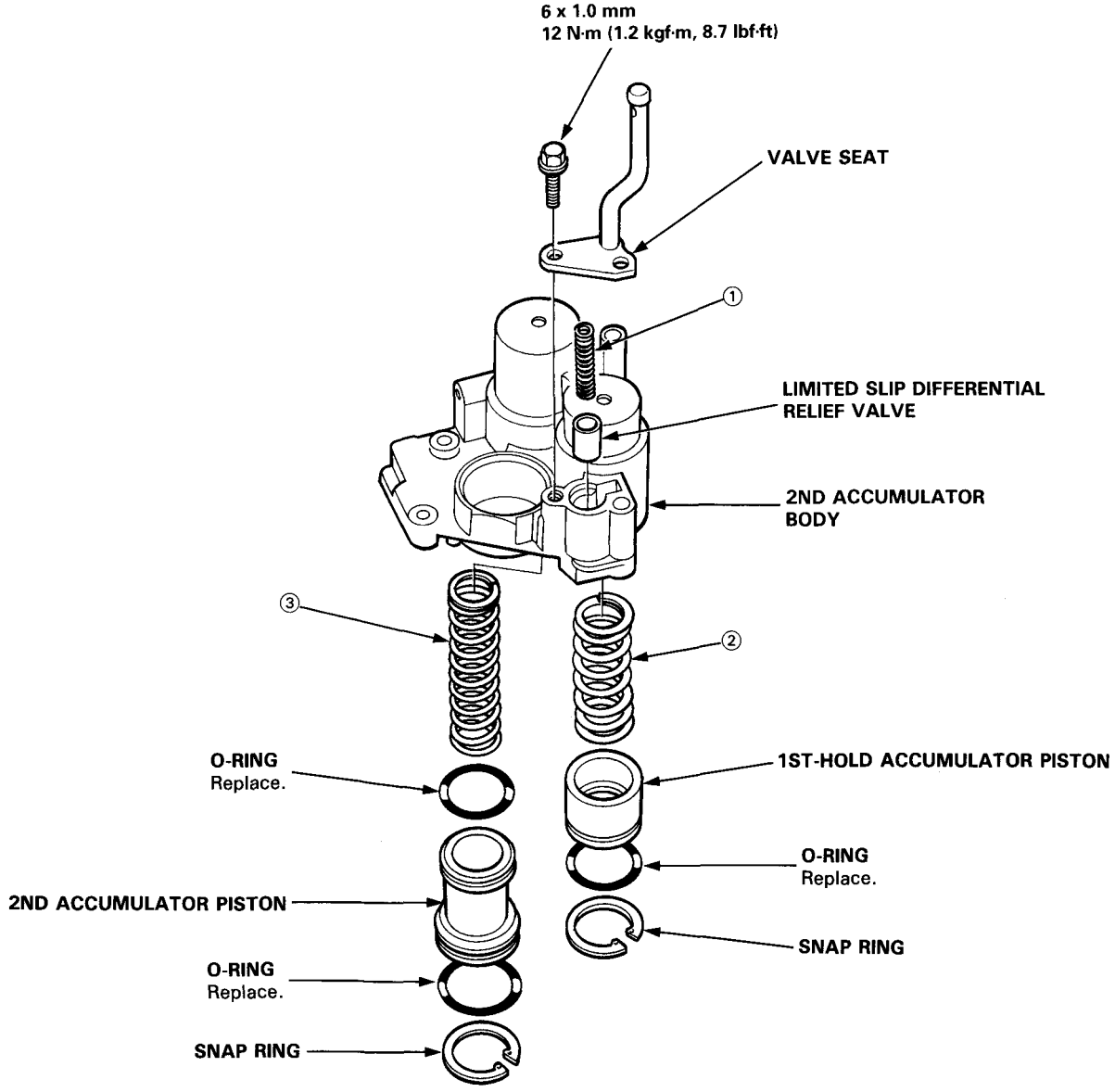

SPRING SPECIFICATIONS

Unit of length: mm (in)

No.	Spring	Standard (New)			
		Wire Dia.	O.D.	Free Length	No. of Coils
①	Limited Slip Differential relief valve spring	0.8 (0.031)	8.4 (0.331)	37.3 (1.469)	12.1
②	1st-hold accumulator spring	3.4 (0.134)	24.3 (0.957)	64.7 (2.547)	6.7
③	2nd accumulator spring	3.3 (0.130)	20.2 (0.795)	78.0 (3.071)	11.8

Mainshaft

Disassembly/Inspection/Reassembly

NOTE:

- Lubricate all parts with ATF during reassembly.
- Install thrust needle bearings with unrolled edge of bearing retainer facing washer.
- Inspect thrust needle and needle bearings for galling and rough movement.
- Before installing the 0-rings, wrap the shaft splines with tape to prevent damage to the O-rings.

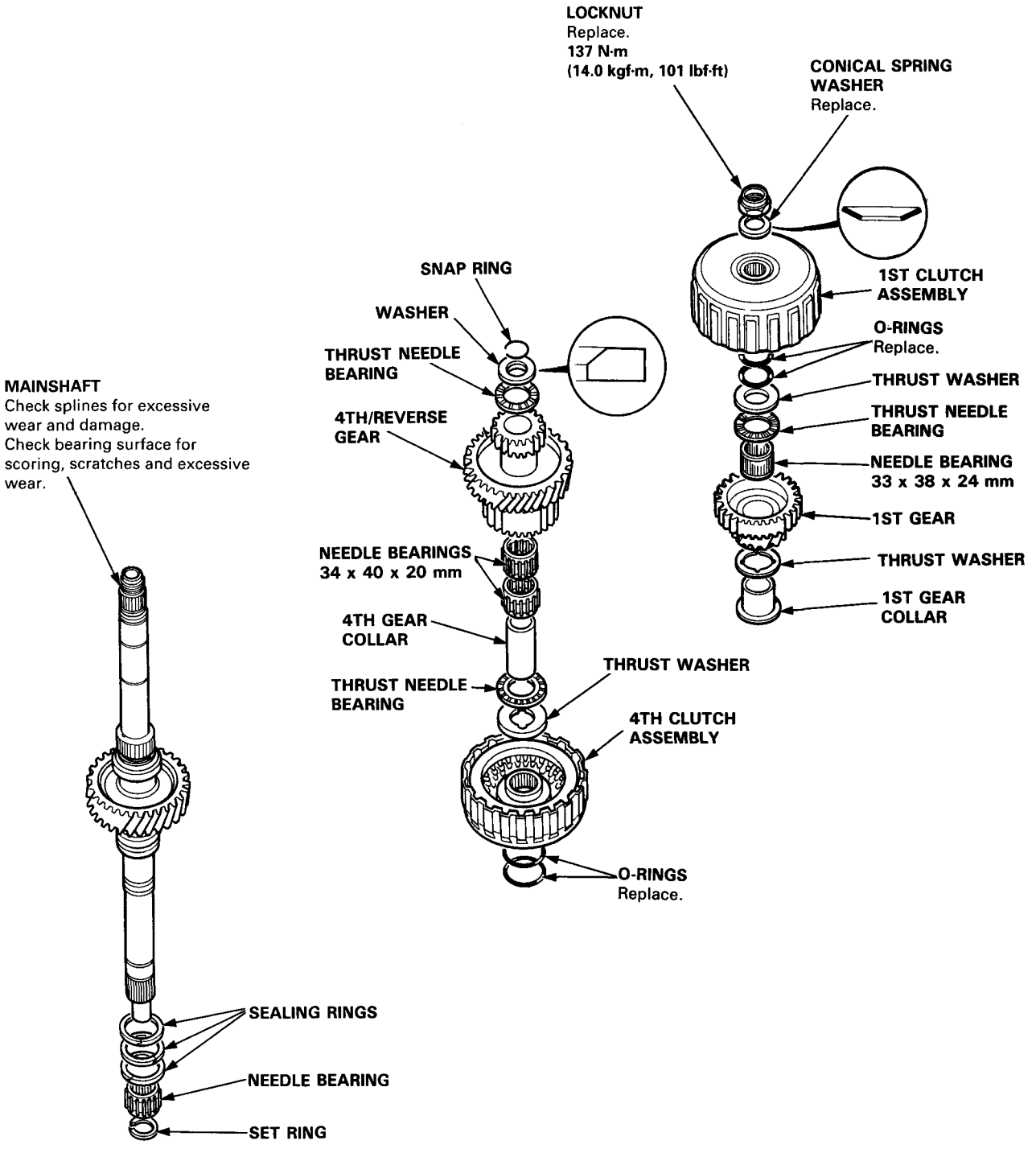

Countershaft

Disassembly/Inspection/Reassembly

NOTE:
- Lubricate all parts with ATF during reassembly.
- Install thrust needle bearings with unrolled edge of bearing retainer facing washer.
- Inspect thrust needle and needle bearings for galling and rough movement.
- Locknut has left-hand threads.
- Before installing the O-rings, wrap the shaft splines with tape to prevent damage to the O-rings.

CAUTION: Before installing the 1st-hold clutch O-rings, install the 1st gear collar and thrust washer.

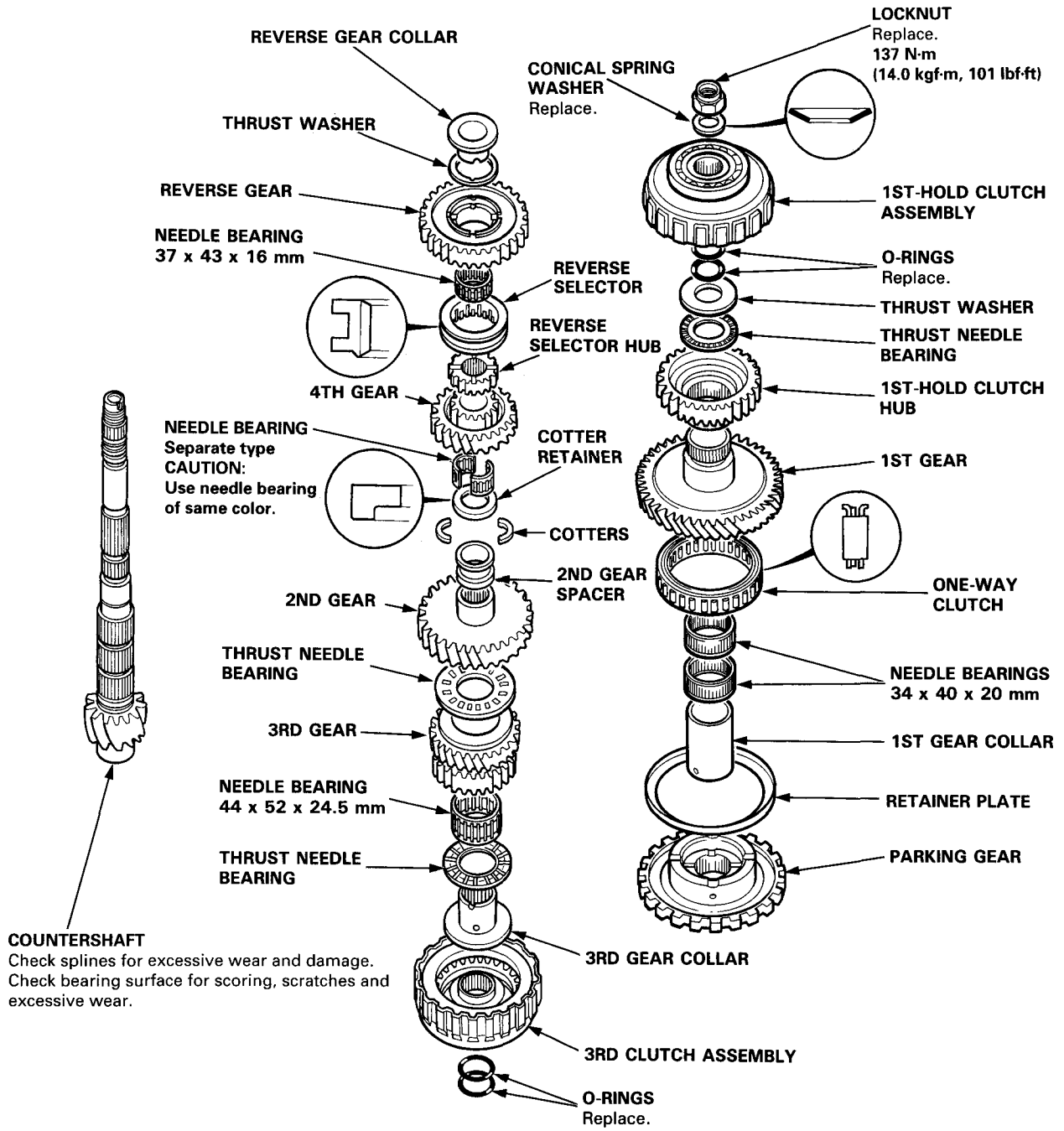

Inspection/Installation

NOTE: Lubricate all parts with ATF during assembly.

1. Assemble the parts below on the countershaft.
   NOTE: Do not install the O-rings during inspection.

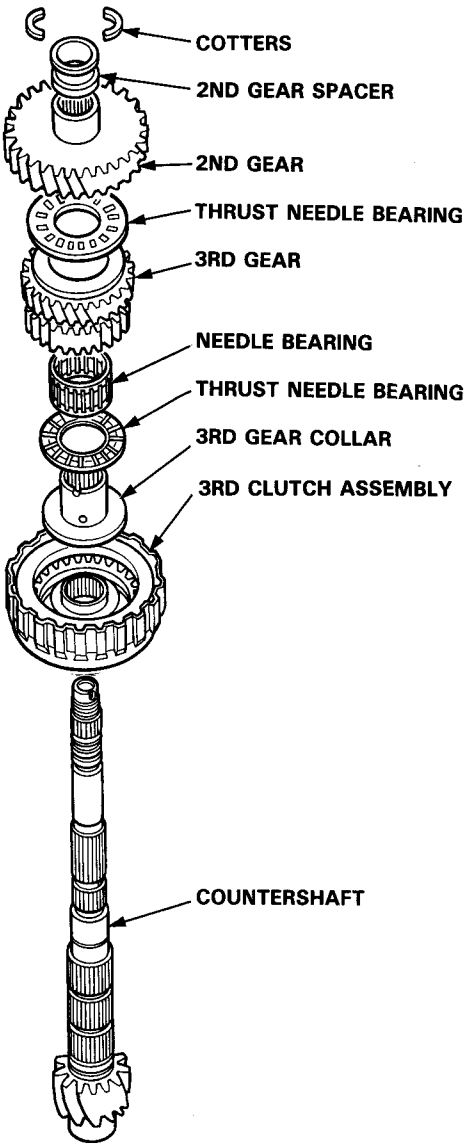

2. Hold the 2nd gear against the 3rd gear. Measure the clearance between the 3rd gear and thrust needle bearing with a feeler gauge.

   NOTE: Take measurements in at least three places, and take the average as the actual clearance.

   STANDARD: 0-0.03 mm (0-0.001 in)

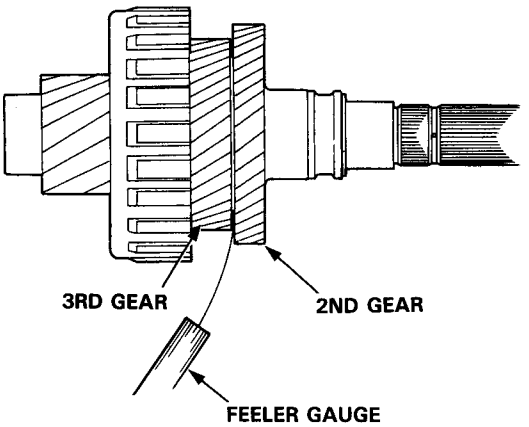

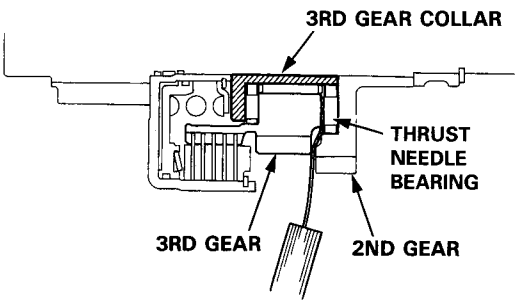

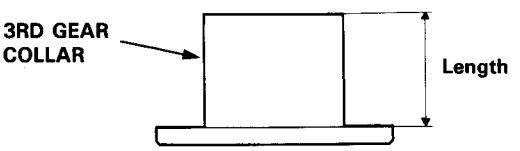

3RD GEAR COLLAR

No	Part Number	Length mm (in)
1	90413-PR9-000	35.425-35.440 (1.3947-1.3952)
2	90414-PR9-000	35.440-35.455 (1.3952-1.3959)
3	90415-PR9-000	35.455-35.470 (1.3959-1.3965)
4	90416-PR9-000	35.470-35.485 (1.3965-1.3970)
5	90417-PR9-000	35.485-35.500 (1.3970-1.3976)
6	90418-PR9-000	35.500-35.515 (1.3976-1.3982)

(cont'd)

Inspection/Installation (cont'd)

3. If the clearance is out of tolerance;

   a. Select and install a new 3rd gear collar, and recheck the clearance.

   b. If the clearance is still out of tolerance, replace the two thrust needle bearings, and recheck the clearance.

   NOTE:
   - If the clearance still exceeds the service limit even with new thrust needle bearings, check the 3rd gear, 2nd gear and 3rd gear collar for wear, and replace any worn parts.
   - After replacing parts, make sure that the clearance is within tolerance.

4. Hold the 2nd gear against the 3rd gear. Measure the clearance between the 2nd gear spacer and cotters with a feeler gauge.

   NOTE: Take measurements in at least three places, and take the average as the actual clearance.

STANDARD: 0-0.05 mm (0-0.002 in)

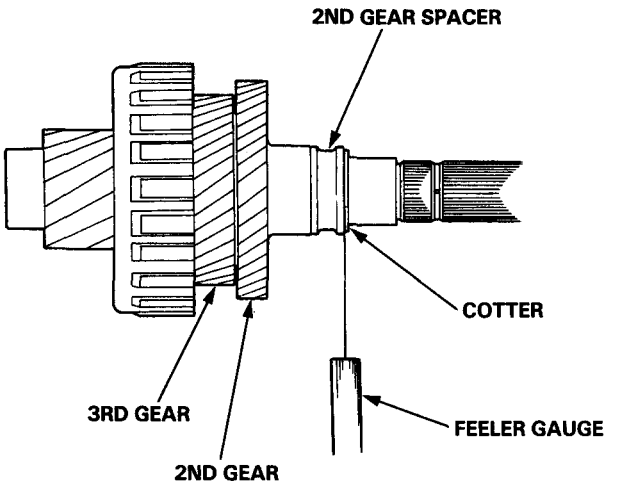

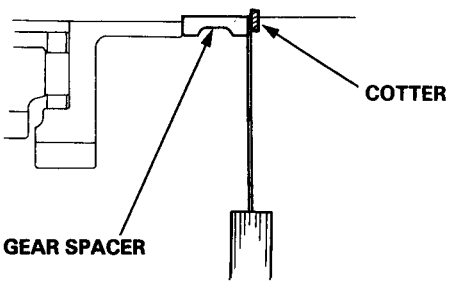

5. If the clearance is out of tolerance, select and install a new cotters.

COTTER 31.5 mm

No	Part Number	Thickness mm (in)
1	90441-PR9-000	1.975-2.000 (0.078-0.079)
2	90442-PR9-000	2.000-2.025 (0.079-0.080)
3	90443-PR9-000	2.025-2.050 (0.080-0.081)
4	90444-PR9-000	2.050-2.075 (0.081-0.082)
5	90445-PR9-000	2.075-2.100 (0.082-0.083)
6	90446-PR9-000	2.100-2.125 (0.083-0.084)
7	90447-PR9-000	2.125-2.150 (0.084-0.085)
8	90448-PR9-000	2.150-2.175 (0.085-0.086)
9	90449-PR9-000	2.175-2.200 (0.086-0.087)
10	90450-PR9-000	2.200-2.225 (0.087-0.088)
11	90451-PR9-000	2.225-2.250 (0.088-0.089)
12	90452-PR9-000	2.250-2.275 (0.089-0.090)
13	90453-PR9-000	2.275-2.300 (0.090-0.091)
14	90454-PR9-000	2.300-2.325 (0.091-0.092)
15	90455-PR9-000	2.325-2.350 (0.092-0.093)
16	90456-PR9-000	2.350-2.375 (0.093-0.094)

6. After replacing the cotters, make sure that the clearance is held within tolerance.

7. Remove the countershaft bearing from the transmission housing. See page 14-158.

8. Assemble the countershaft including all bearings and other parts shown on page 14-138.

9. Torque the countershaft locknut to 29 N-m (3.0 kgf-m, 22 lbf-ft).

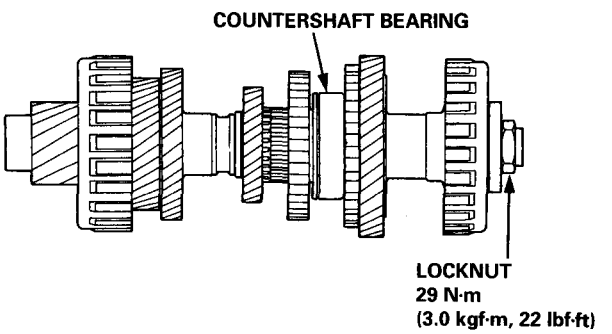

10. Measure the clearance between 4th gear and reverse selector hub with a feeler gauge.

NOTE: Take measurements in at least three places, and take the average as the actual clearance.

STANDARD: 0.05 - 0.11 mm (0.002 - 0.004 in)

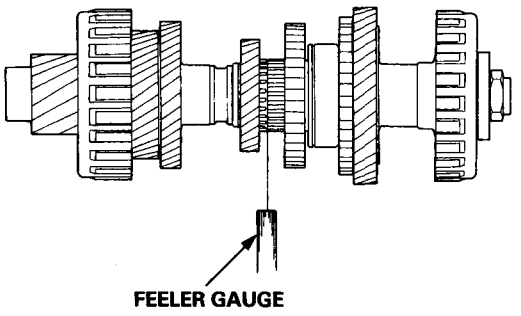

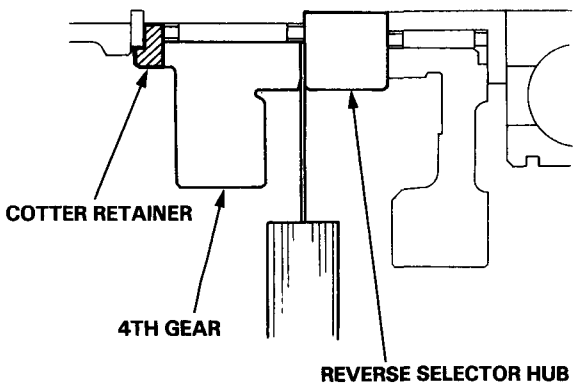

11. If the clearance is out of tolerance, select and install a new cotter retainer.

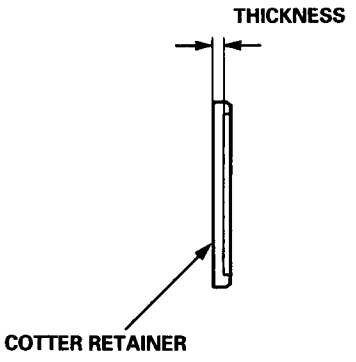

COTTER RETAINER

No.	Parts Number	Thickness
1	90431 – PR9 – 000	2.97 — 3.00 mm (0.117 — 0.118 in)
2	90432 – PR9 – 000	3.00 — 3.03 mm (0.118 — 0.119 in)
3	90433 – PR9 – 000	3.03 — 3.06 mm (0.119 — 0.120 in)
4	90434 – PR9 – 000	3.06 — 3.09 mm (0.120 — 0.122 in)
5	90435 – PR9 – 000	3.09 — 3.12 mm (0.122 — 0.123 in)

12. After replacing the cotter retainer, make sure that the clearance is within tolerance.

13. Measure the clearance between 1st gear and 1st-hold clutch hub with a feeler gauge.

NOTE: Take measurements in at least three places, and take the average as the actual clearance.

STANDARD: 0.20 - 0.31 mm (0.008 - 0.012 in)

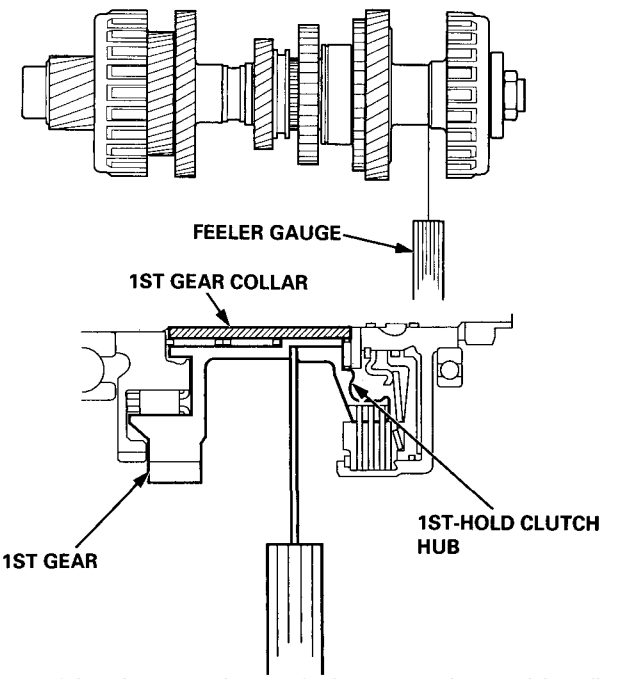

14. If the clearance is out of tolerance, select and install a new 1st gear collar.

1ST GEAR COLLAR

No.	Parts Number	Thickness
1	90509 – PR9 – 000	62.5 – 62.55 mm (2.461 – 2.463 in)
2	90510 – PR9 – 000	62.6 – 62.65 mm (2.465 – 2.467 in)

15. After replacing the 1st gear collar, make sure that the clearance is within tolerance.

One-way Clutch/Parking Gear

Disassembly/Inspection/Reassembly

1. Separate countershaft 1 st gear from the parking gear by turning the parking gear in the direction shown.

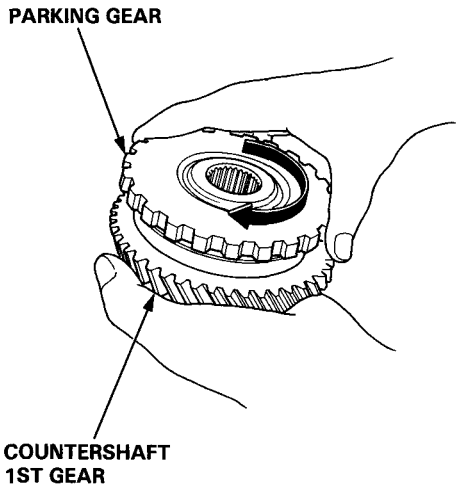

2. Remove the one-way clutch by prying it up with the end of a screwdriver.

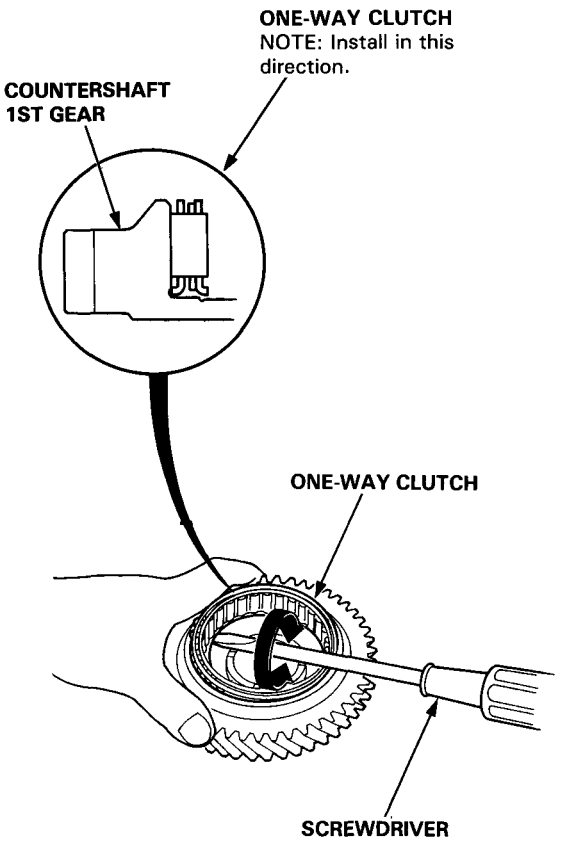

Inspect the parts as follows:

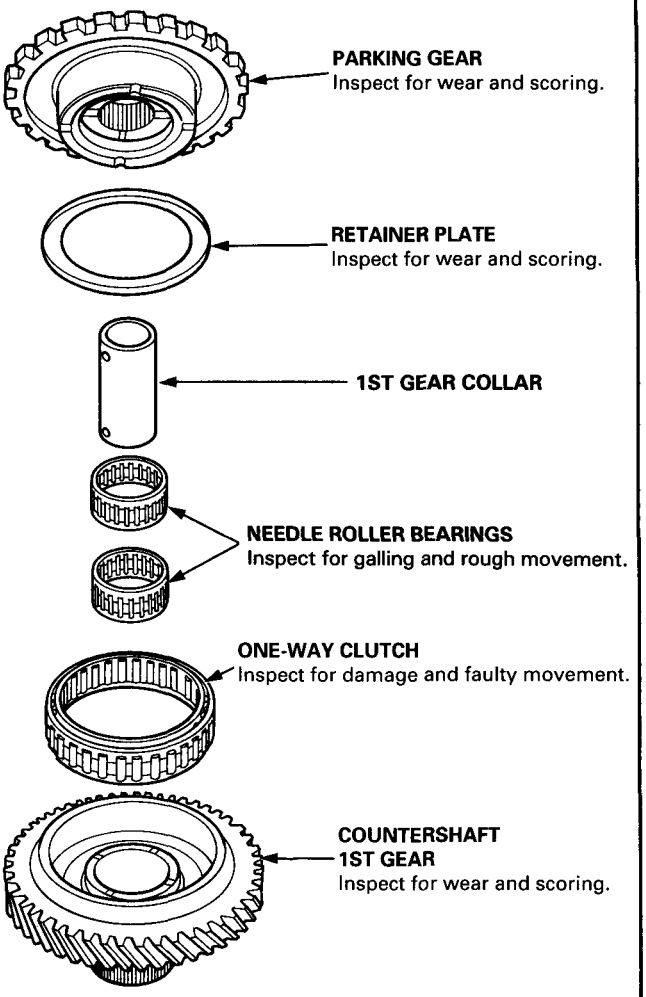

3. After the parts are assembled, hold countershaft 1st gear and turn the parking gear in the direction shown to be sure it turns freely.

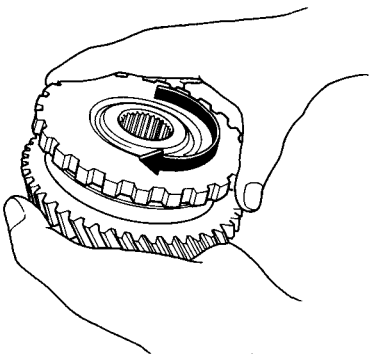

Secondary Shaft

Disassembly/Inspection/Reassembly

NOTE:

- Lubricate all parts with ATF during reassembly.
- Install thrust needle bearings with unrolled edge of bearing retainer facing washer.
- Inspect thrust needle and needle bearings for galling and rough movement.
- Before installing the O-rings, wrap the shaft splines with tape to prevent damage to the O-rings.

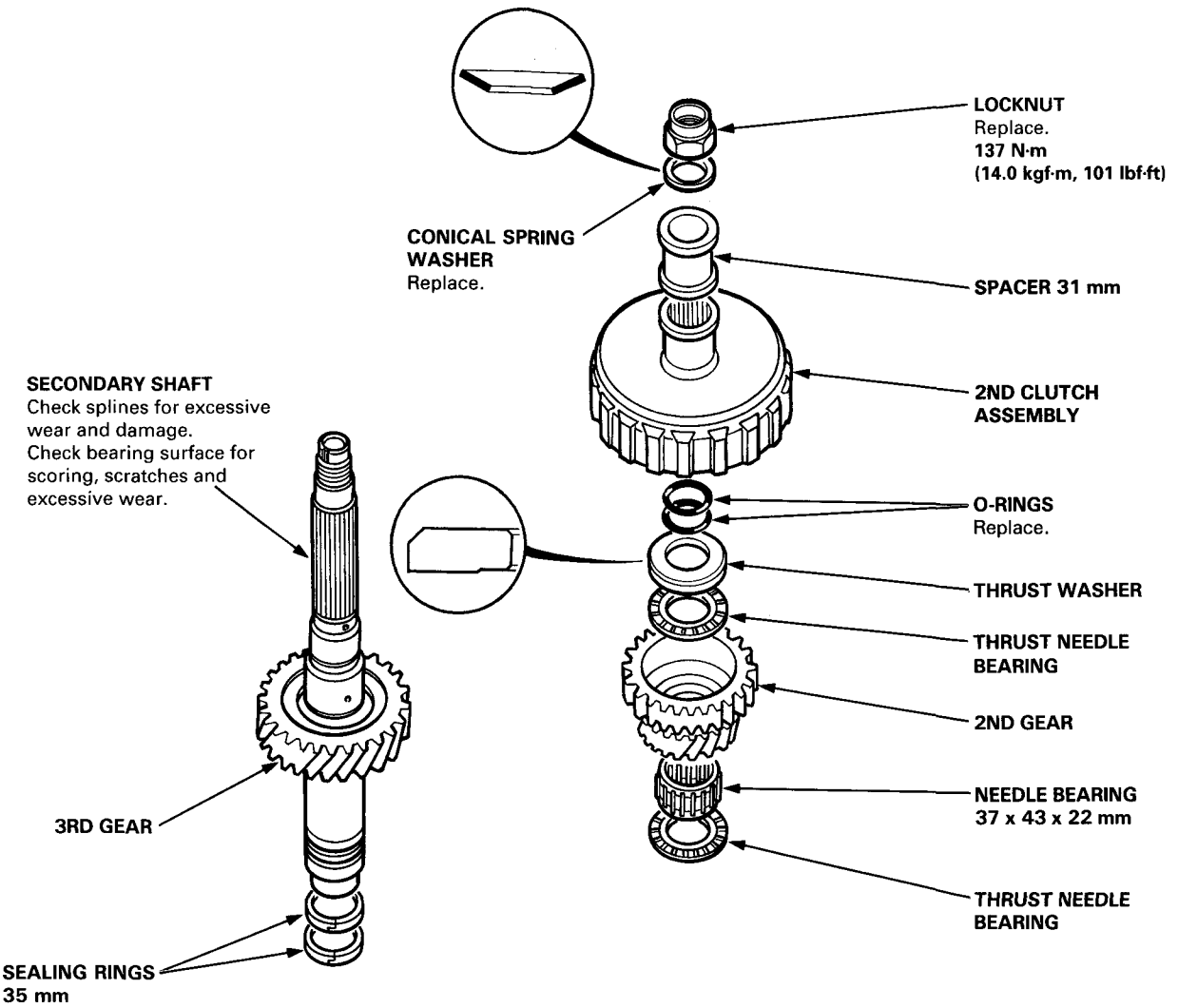

Secondary Shaft

Inspection/Installation

NOTE:
- Lubricate all parts with ATF during assembly.
- Before installing the O-rings, wrap the shaft splines with tape to prevent damage to the O-rings.

1. Assemble the parts below on the secondary shaft.

   NOTE:
   - Install the thrust washer so that the large chamfer on the circumference faces the 2nd clutch assembly.
   - Do not install the O-rings during inspection.

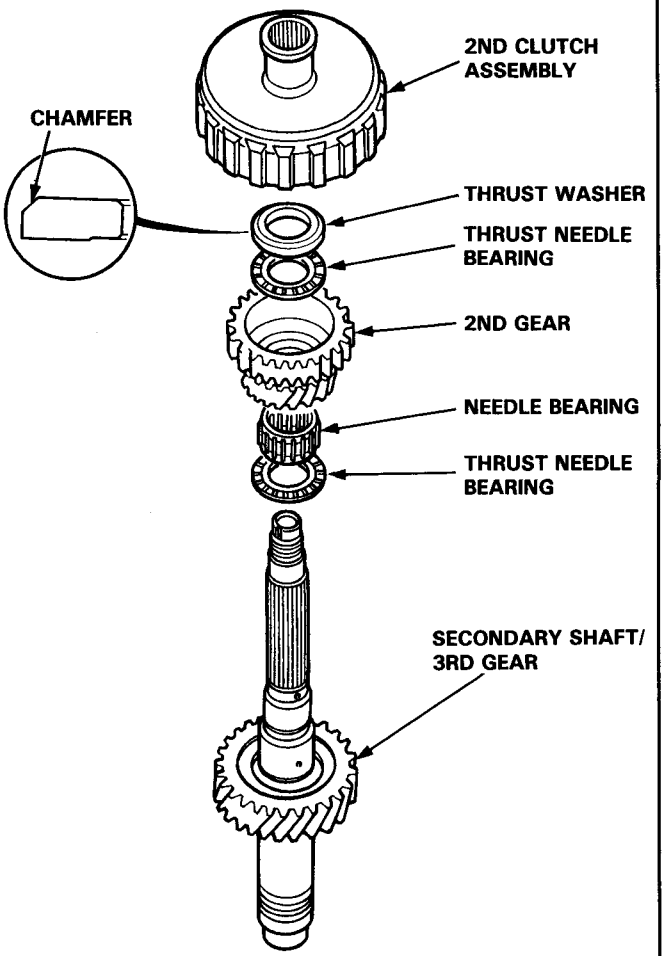

2. Hold the 2nd clutch assembly against the 3rd gear. Measure the clearance between the 2nd gear and thrust needle bearing using a feeler gauge.

   NOTE: Take measurements in at least three places, and take the average as the actual clearance.

   STANDARD: 0.01 - 0.07 mm (0.0004 - 0.0028 in)

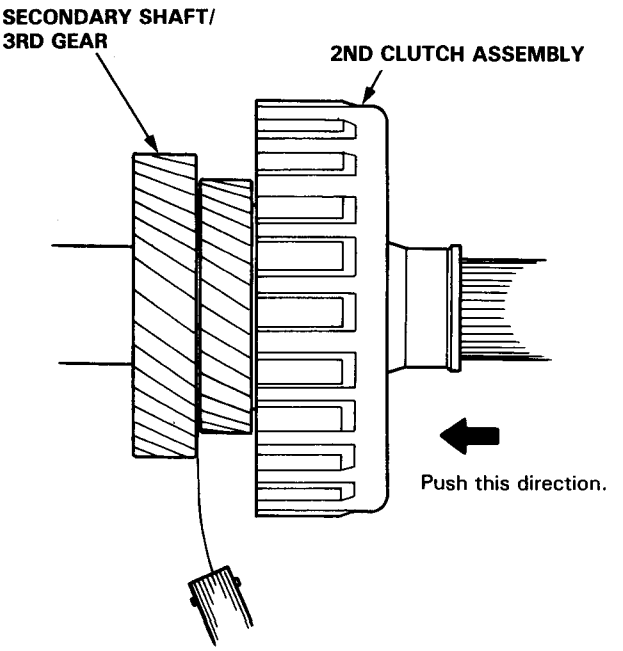

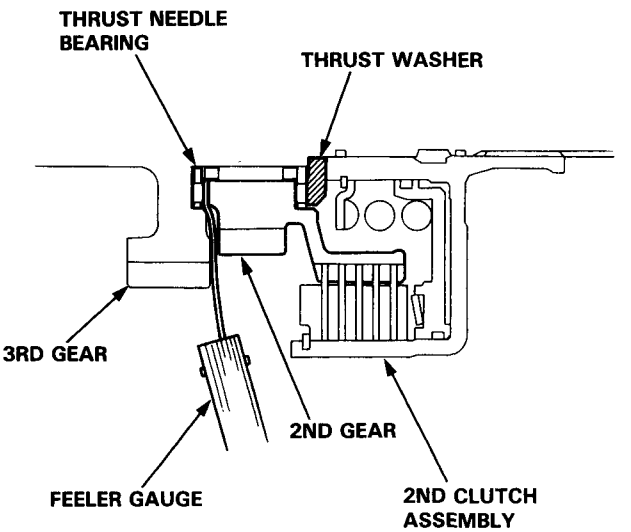

3. If the clearance is out of tolerance, select and install a new thrust washer.

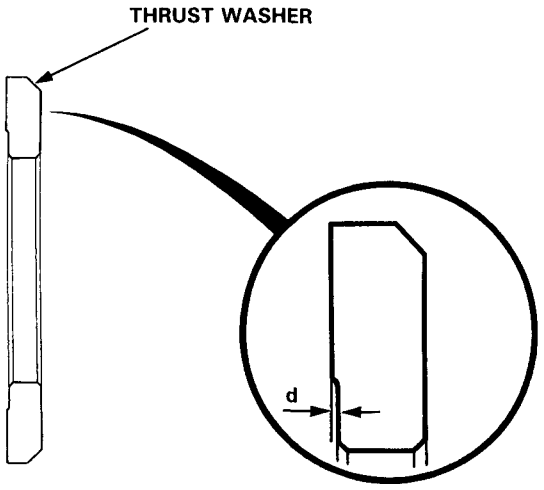

THRUST WASHER

No.	Parts Number	Depth (d)
1	90408—PR9—000	0 mm (0 in)
2	90409—PR9—000	0.00—0.03 mm (0.00—0.001 in)
3	90410—PR9—000	0.03—0.06 mm (0.001—0.002 in)
4	90411—PR9—000	0.06—0.09 mm (0.002—0.004 in)
5	90412—PR9—000	0.09—0.12 mm (0.004—0.005 in)

4. After replacing the thrust washer, make sure that the clearance is within tolerance.

Illustrated Index

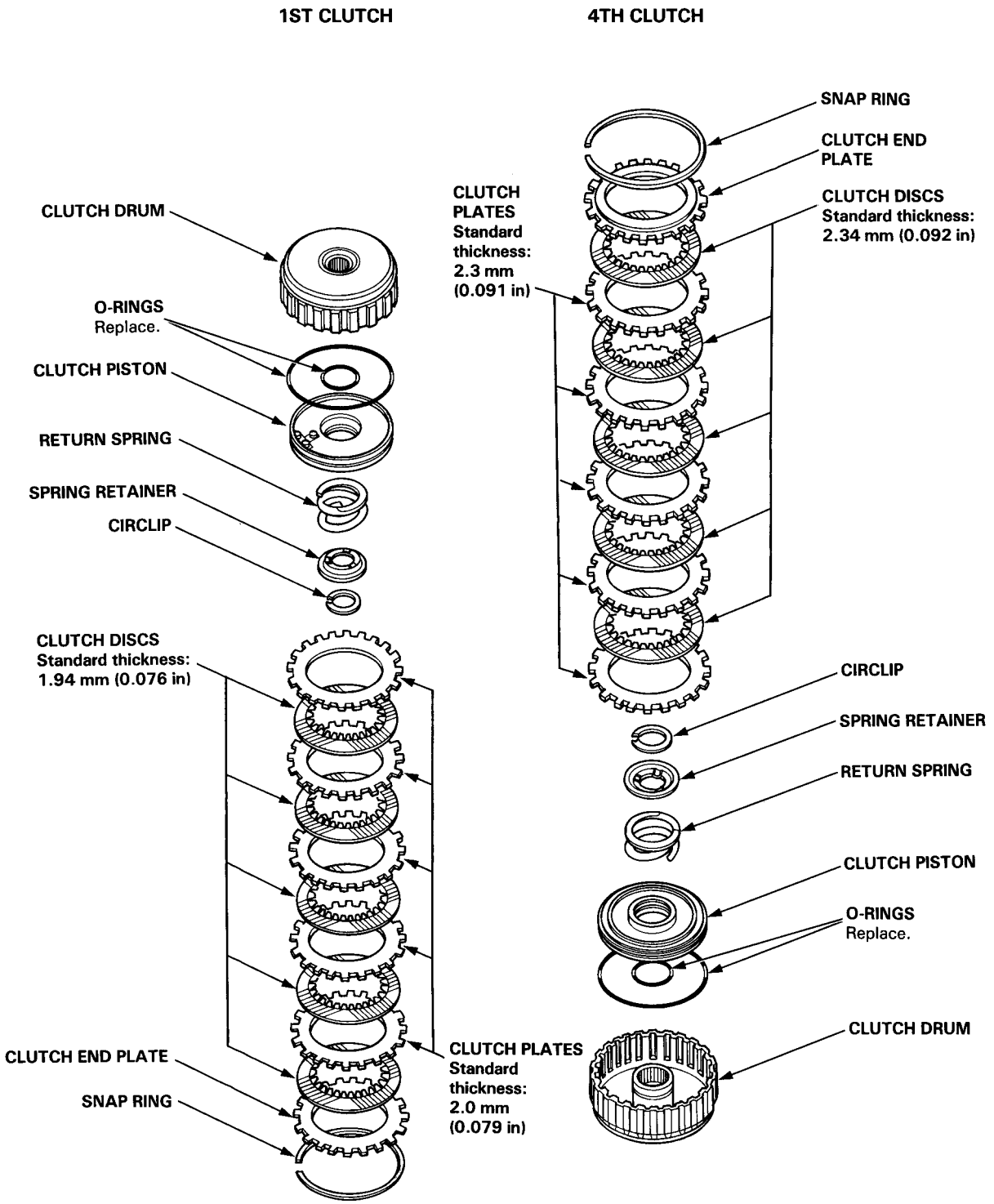

1ST-HOLD CLUTCH

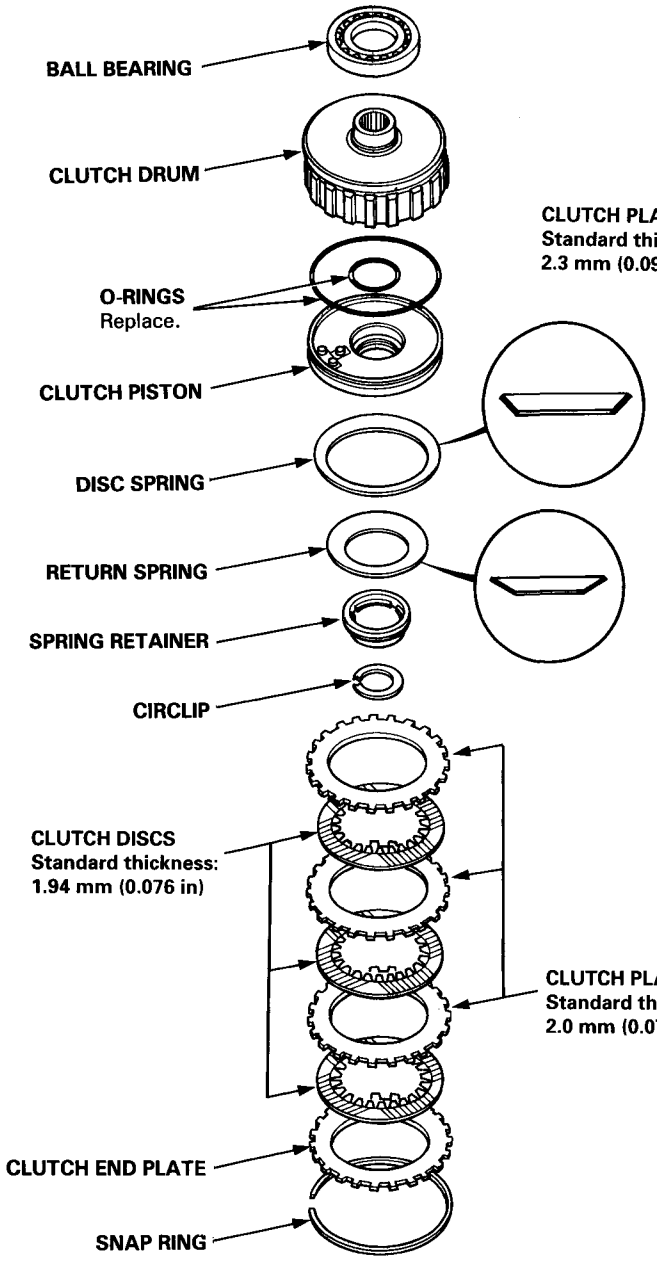

3RD CLUTCH

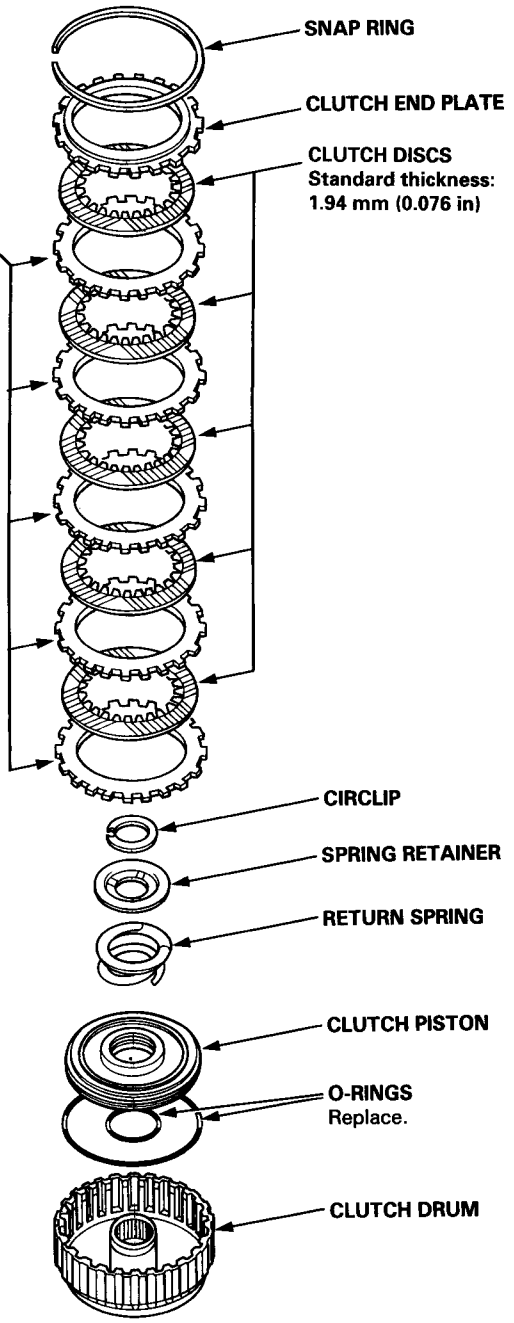

(cont'd)

Illustrated Index (cont'd)

2ND CLUTCH

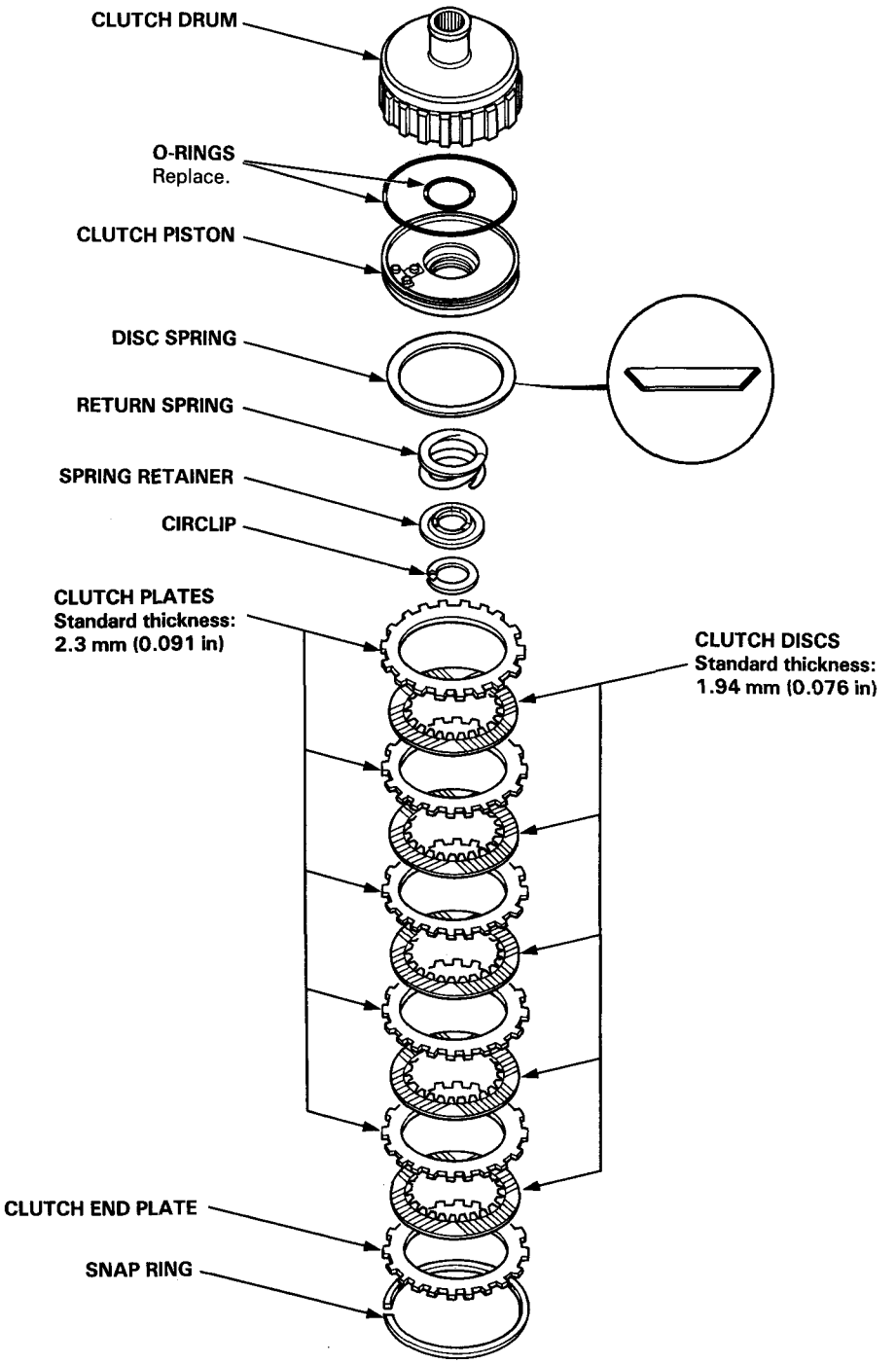

Disassembly

1. Remove the snap rings, then remove the clutch end plate, clutch discs and plates.

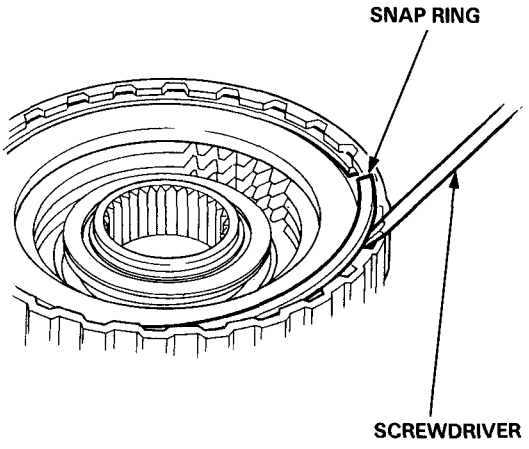

2. Remove the disc spring.

NOTE: For 1st-hold and 2nd clutches.

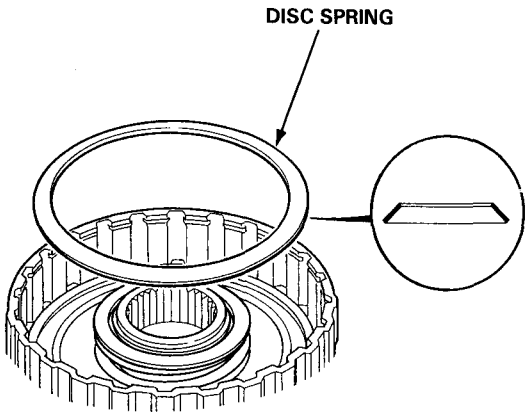

3. Install the special tools as shown.

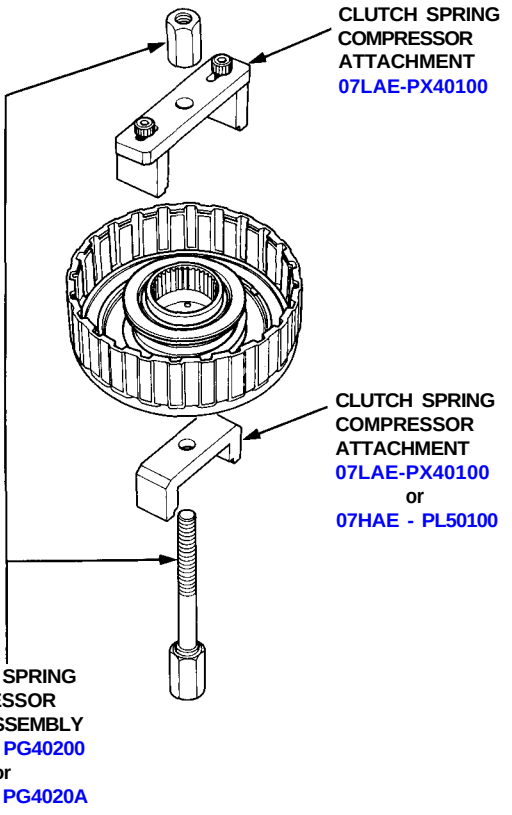

CAUTION: If either end of the special tool is set over an area of the spring retainer which is unsupported by the return spring, the retainer may be damaged. Be sure the special tool is adjusted to have full contact with the spring retainer.

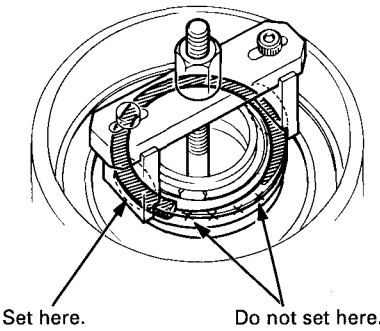

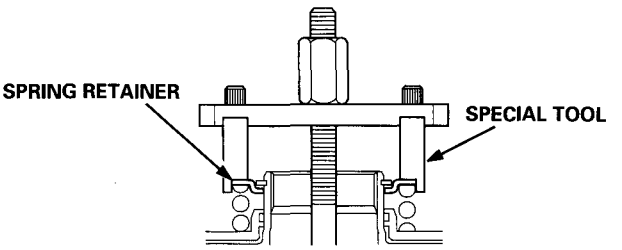

(cont'd)

Disassembly (cont'd)

4. Compress the clutch return spring.

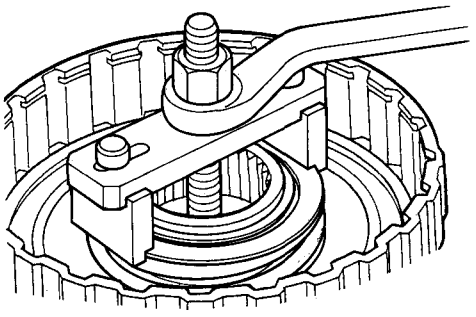

5. Remove the circlip. Then remove the special tool, spring retainer and return spring.

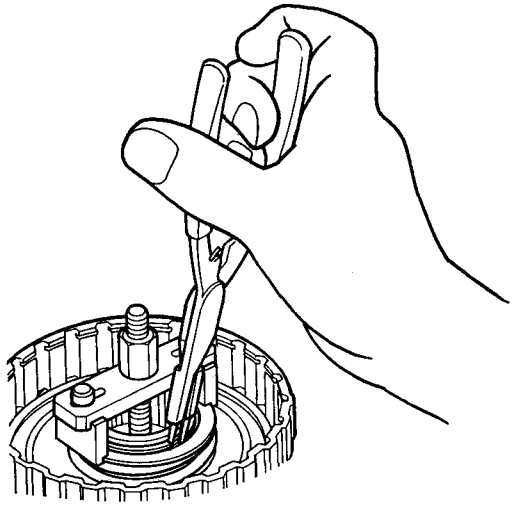

6. Wrap a shop rag around the clutch drum, and apply air pressure to the fluid passage to remove the piston. Place a finger tip on the other end while applying air pressure.

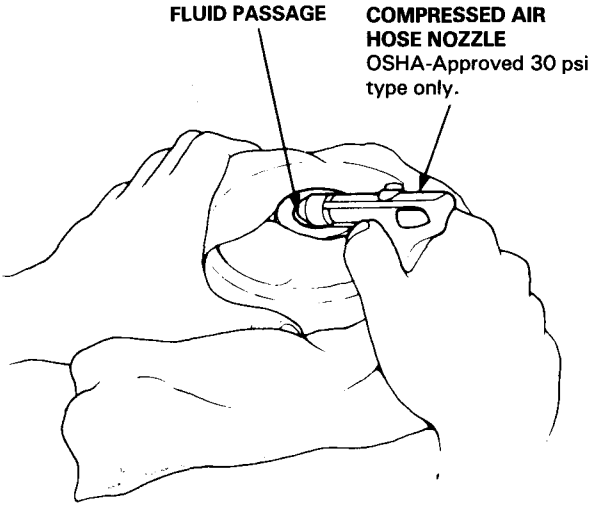

Reassembly

NOTE:
- Clean all parts thoroughly in solvent or carburetor cleaner, and dry with compressed air.
- Blow out all passages.
- Lubricate all parts with ATF before assembly.

1. Inspect the check valve; if it's loose, replace the piston.

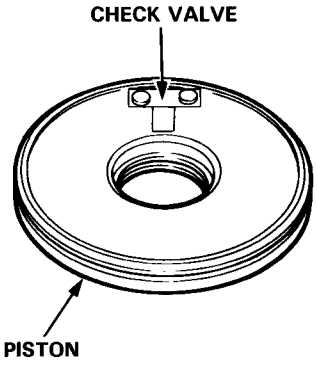

2. Install a new O-ring on the clutch piston.

3. Be sure that the disc spring is securely staked.

NOTE: For 1st, 3rd and 4th clutches.

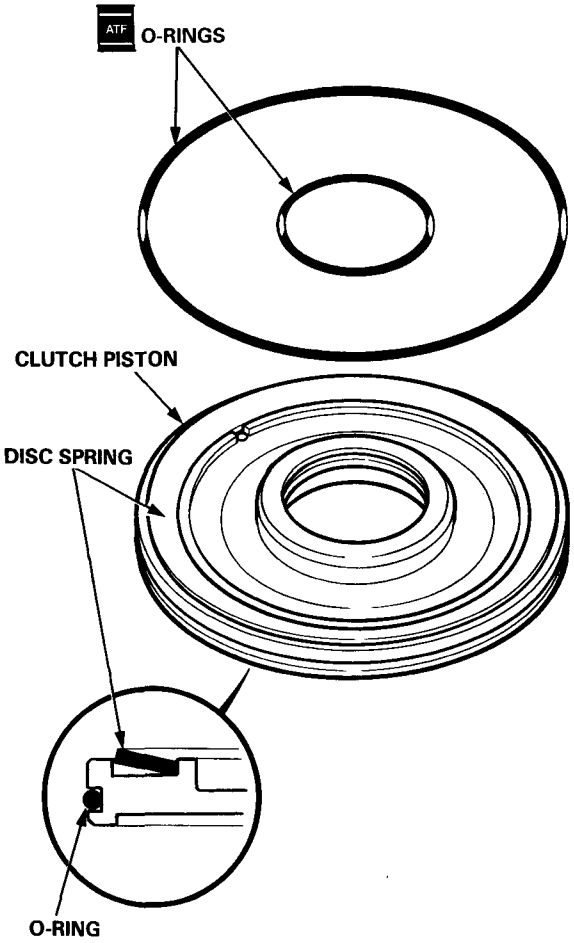

4. Install the piston in the clutch drum. Apply pressure and rotate to ensure proper seating.

NOTE: Lubricate the piston O-ring with ATF before installing.

CAUTION: Do not pinch O-ring by installing the piston with force.

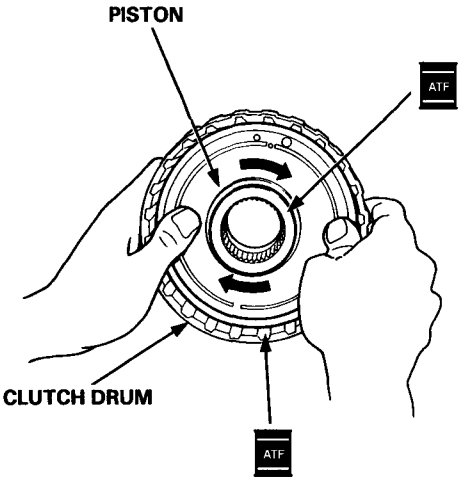

5. Install the return spring and spring retainer, then position the circlip on the retainer.

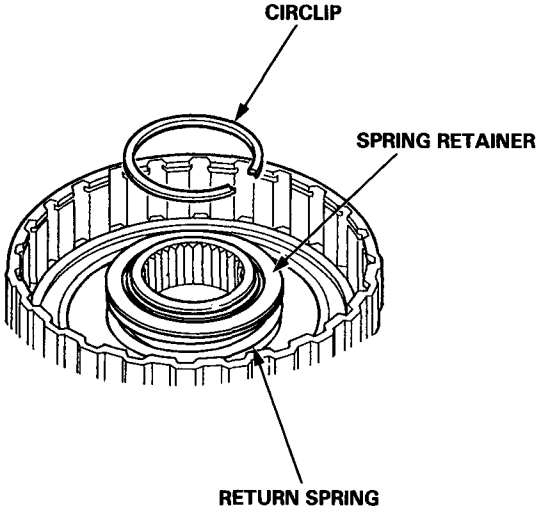

(cont'd)

Reassembly (cont'd)

6. Install the special tools as shown.

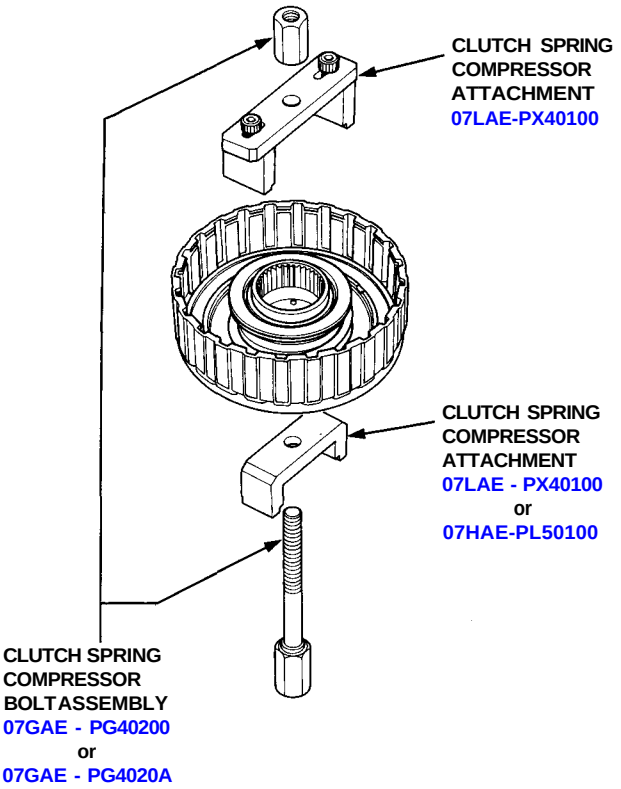

CAUTION: If either end of the special tool is set over an area of the spring retainer which is unsupported by the return spring, the retainer may be damaged. Be sure the special tool is adjusted to have full contact with the spring retainer.

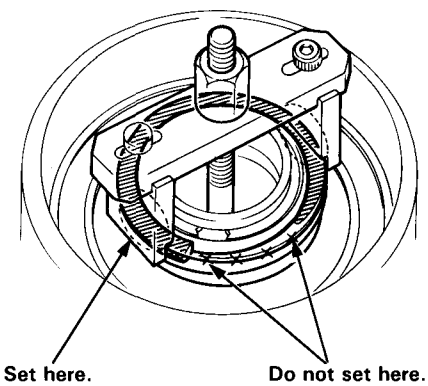

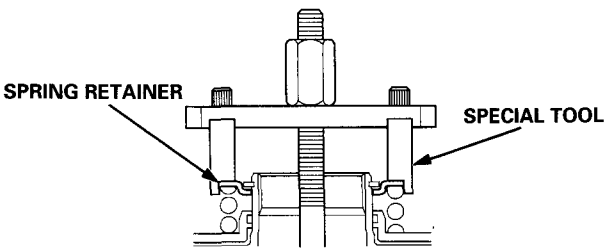

7. Compress the clutch return spring.

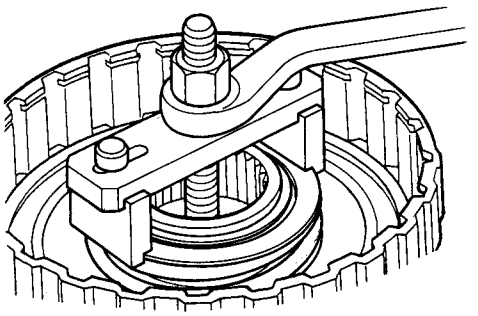

8. Install the circlip.

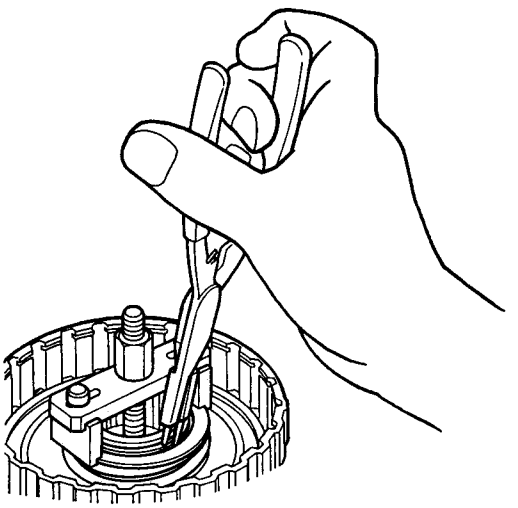

9. Remove the special tools.

10. Install the disc spring.

NOTE:
- For 1st-hold and 2nd clutches.
- Install the disc spring in the direction shown.

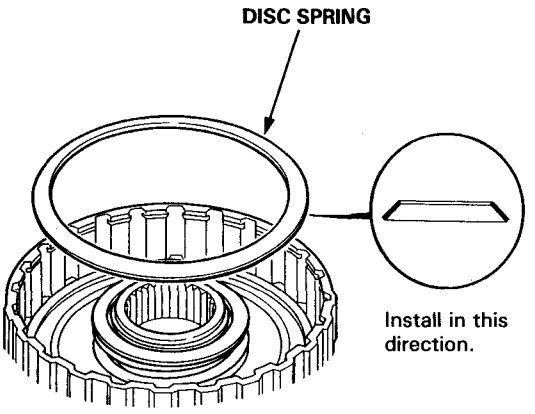

11. Soak the clutch discs thoroughly in ATF for a minimum of 30 minutes.

12. Starting with a clutch plate, alternately install the clutch plates and discs. Install the clutch end plate with flat side toward the disc.

NOTE: Before installing the plates and discs, make sure the inside of the clutch drum is free of dirt or other foreign matter.

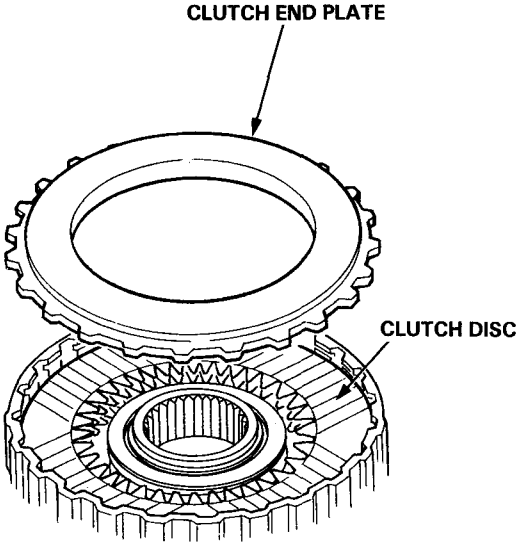

13. Install the snap ring.

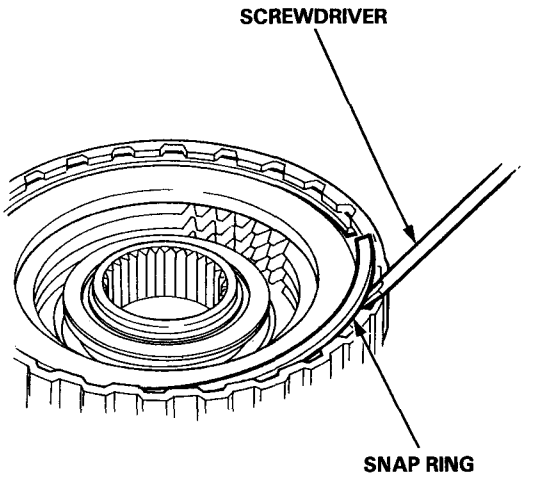

(cont'd)

Reassembly (cont'd)

14. Measure the clearance between the clutch end plate and top disc with a dial indicator. Zero the dial indicator with the clutch end plate lowered, and lift it up to the snap ring. The distance that the clutch end plate moves is the clearance between the clutch end plate and top disc.

    NOTE: Measure at three locations.

End Plate-to-Top Disc Clearance:

Clutch	Service Limit
1st	0.65 — 0.85 mm (0.026 — 0.033 in)
2nd	0.75 — 0.95 mm (0.030 — 0.037 in)
3rd	0.75 — 0.95 mm (0.030 — 0.037 in)
4th	0.75 — 0.95 mm (0.030 — 0.037 in)
1st-hold	0.70 — 0.90 mm (0.028 — 0.035 in)

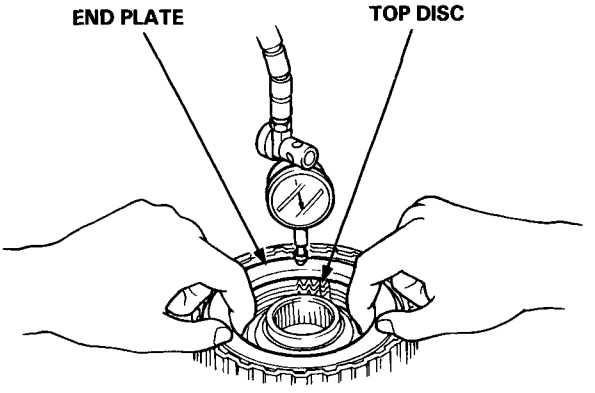

15. If the clearance is not within the service limits, select a new clutch end plate from the following table.

    NOTE: If the thickest clutch end plate is installed, but the clearance is still over the standard, replace the clutch discs and clutch plates.

CLUTCH END PLATE

2ND, 3RD, 4TH and 1ST-HOLD CLUTCH:

Part Number	Plate No.	Thickness mm (in)
22551 – PX4 – 003	1	2.1 (0.083)
22552 – PX4 – 003	2	2.2 (0.087)
22553 – PX4 – 003	3	2.3 (0.091)
22554 – PX4 – 003	4	2.4 (0.094)
22555 – PX4 – 003	5	2.5 (0.098)
22556 – PX4 – 003	6	2.6 (0.102)
22557 – PX4 – 003	7	2.7 (0.106)
22558 – PX4 – 003	8	2.8 (0.110)
22559 – PX4 – 003	9	2.9 (0.114)

1ST CLUTCH:

Part Number	Plate No.	Thickness mm (in)
22631 – PR9 – 003	1	2.1 (0.083)
22632 – PR9 – 003	2	2.2 (0.087)
22633 – PR9 – 003	3	2.3 (0.091)
22634 – PR9 – 003	4	2.4 (0.094)
22635 – PR9 – 003	5	2.5 (0.098)
22636 – PR9 – 003	6	2.6 (0.102)
22637 – PR9 – 003	7	2.7 (0.106)
22638 – PR9 – 003	8	2.8 (0.110)
22639 – PR9 – 003	9	2.9 (0.114)

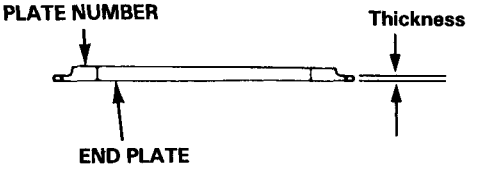

1st-hold Clutch Bearing

Replacement

1. Remove the 1st-hold clutch bearing using a bearing puller.

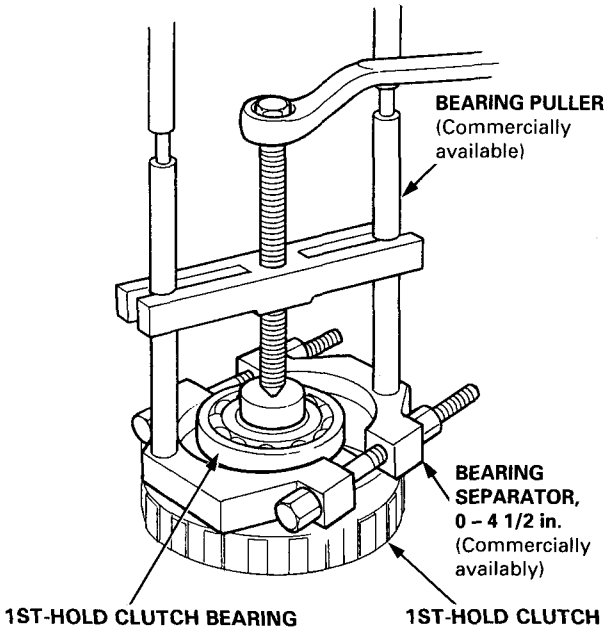

2. Install a new bearing using the special tools as shown.

NOTE: Drive in the bearing until it is fully seated.

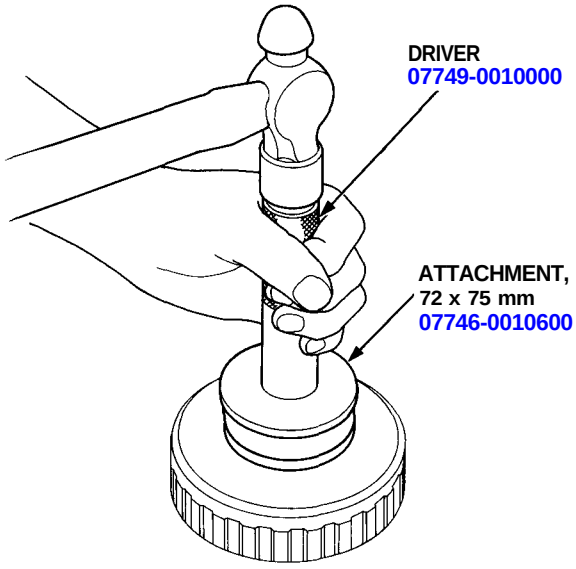

Torque Converter Housing Bearings

Mainshaft Bearing/Oil Seal Replacement

1. Drive out the mainshaft bearing and oil seal using the special tools as shown.

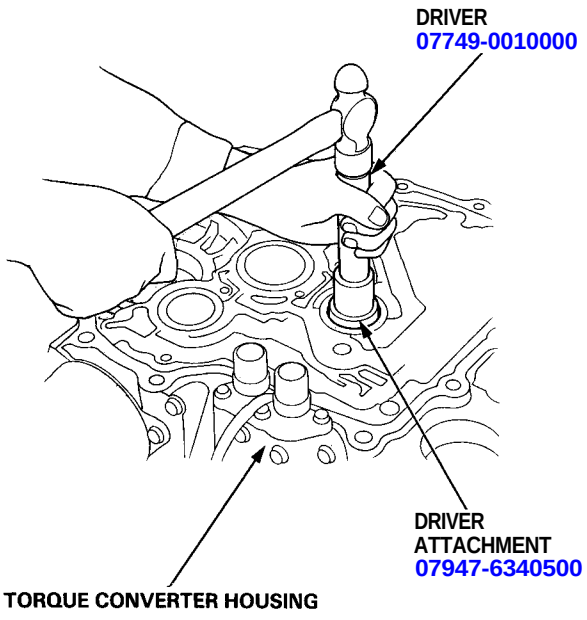

2. Drive in the new mainshaft bearing until it bottoms in the housing using the special tools as shown.

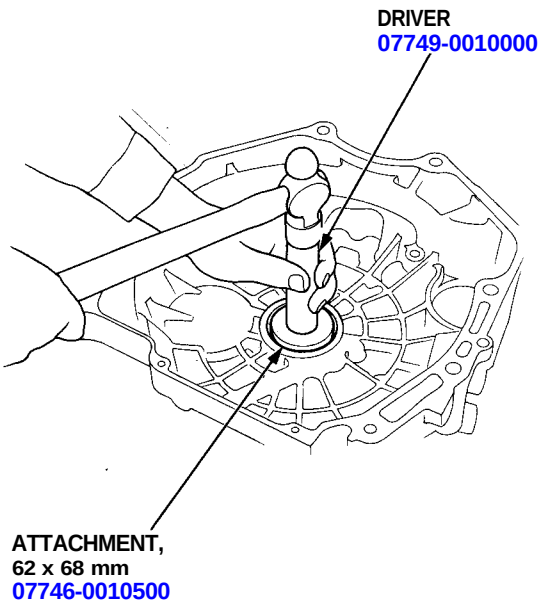

3. Install the new oil seal flush with the housing using the special tools as shown.

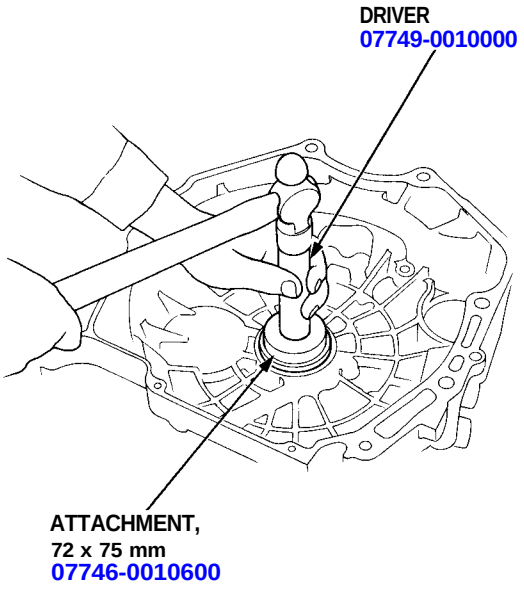

Countershaft Bearing Replacement

1. Remove the countershaft bearing using the special tools as shown.

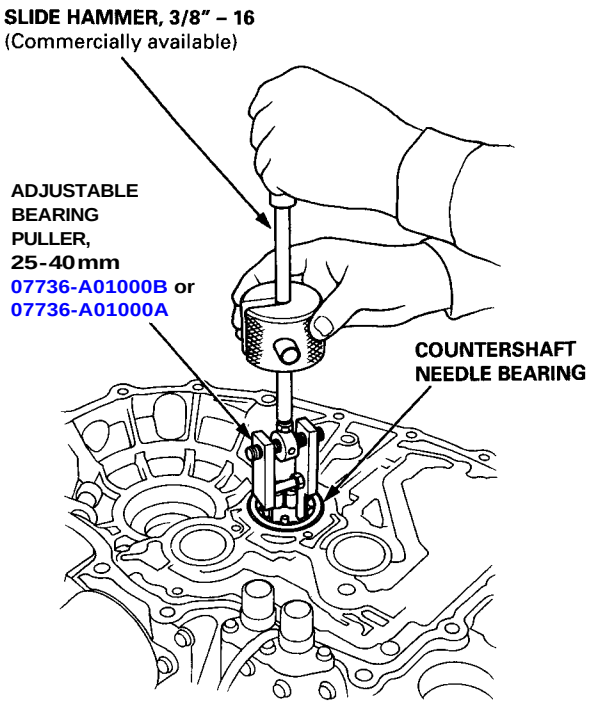

2. Replace the ATF guide plate.

3. Drive the new bearing into the housing using the special tools as shown.

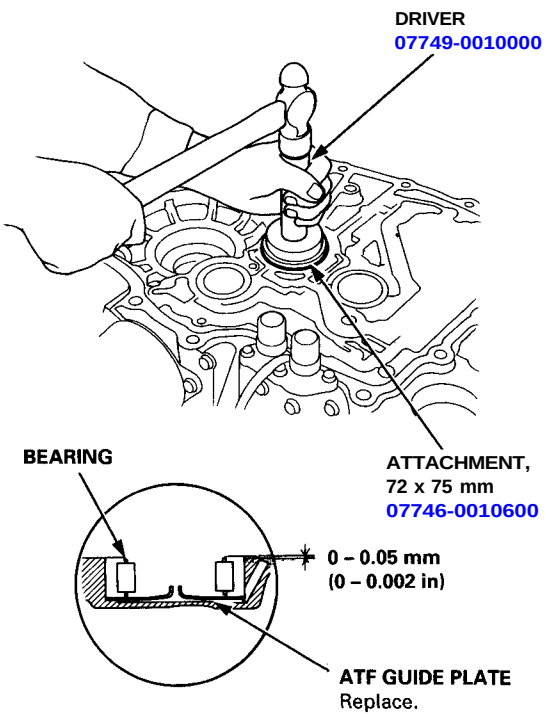

Secondary Shaft Bearing Replacement

1. Remove the secondary shaft bearing using the special tools as shown.

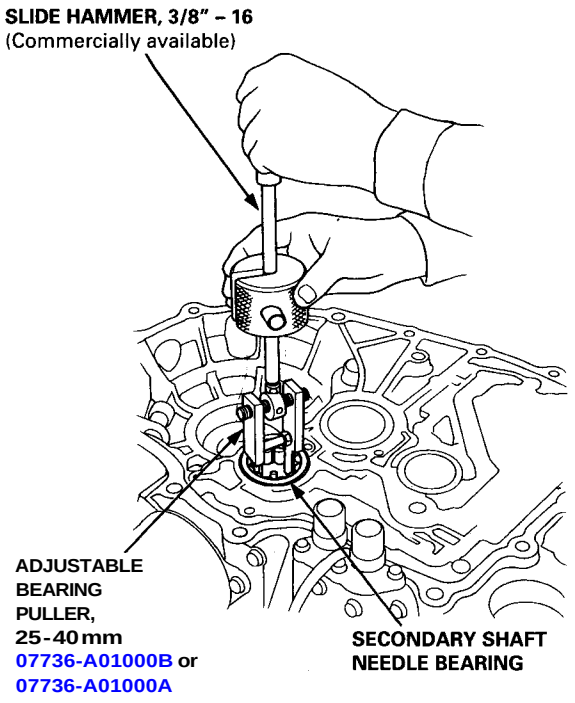

2. Replace the ATF guide plate.

3. Drive the new bearing into the housing using the special tools as shown.

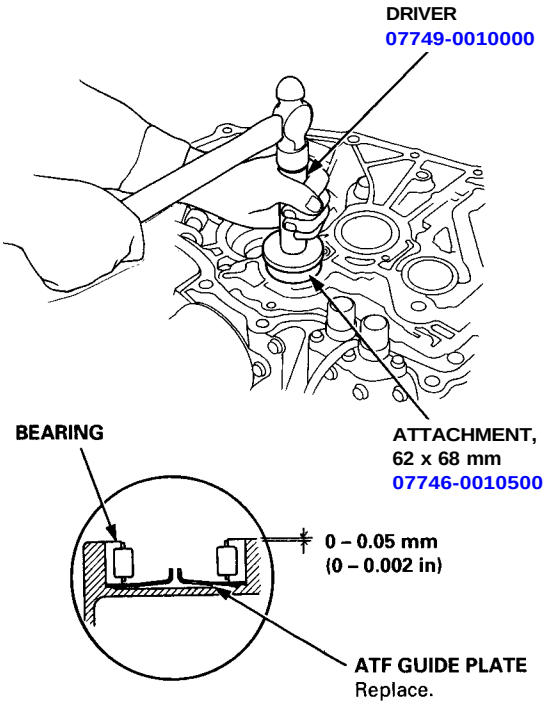

Transmission Housing Bearings

Replacement

1. To remove the mainshaft, countershaft and secondary shaft bearings from the transmission housing, expand each snap ring with the snap ring pliers, then push the bearing out.

   NOTE: Do not remove the snap rings unless it's necessary to clean the grooves in the housing.

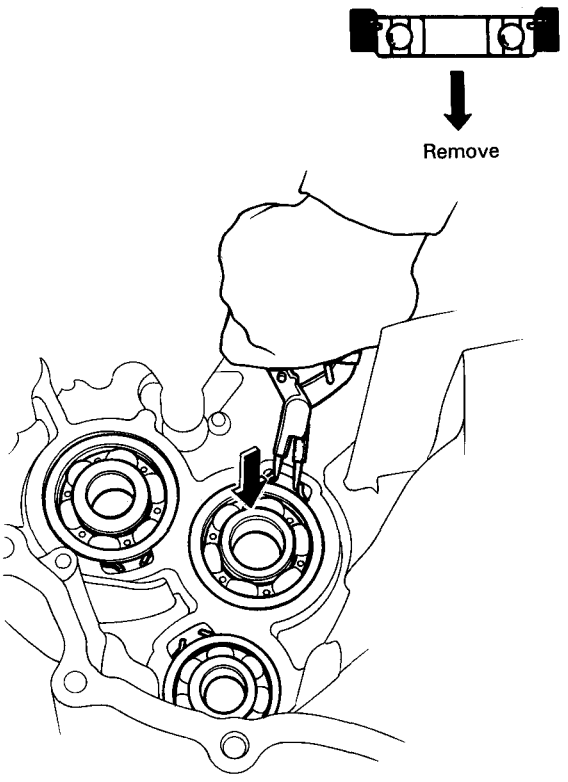

2. Expand each snap ring with the snap ring pliers, insert the new bearing part-way into it, then release the pliers. Push the bearing down into the transmission until the ring snaps in place around it.

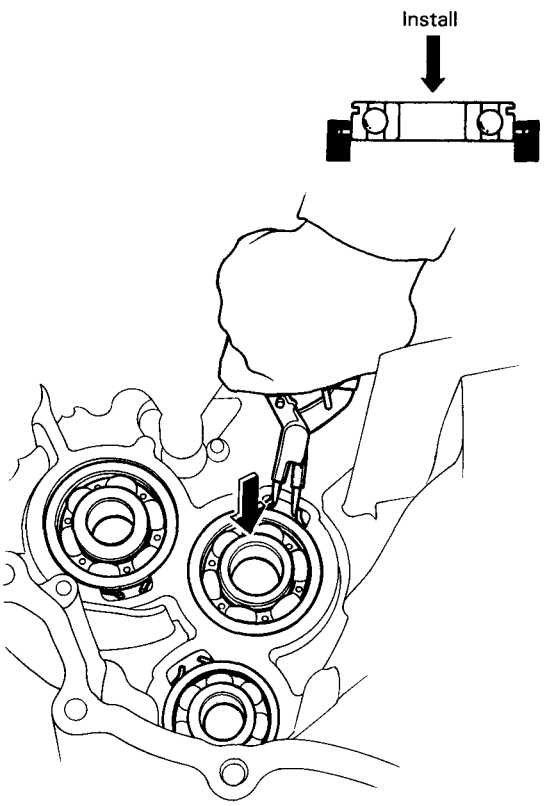

Reverse Idler Gear

Installation

1. Install the reverse idler gear.

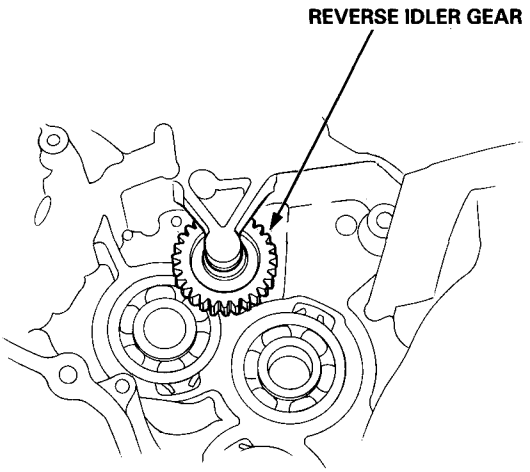

2. Set the spring in the reverse idler shaft. Push the spring in with the steel ball, then install the needle bearing.

   NOTE: The steel ball is under spring pressure. Take care not to let it pop out.

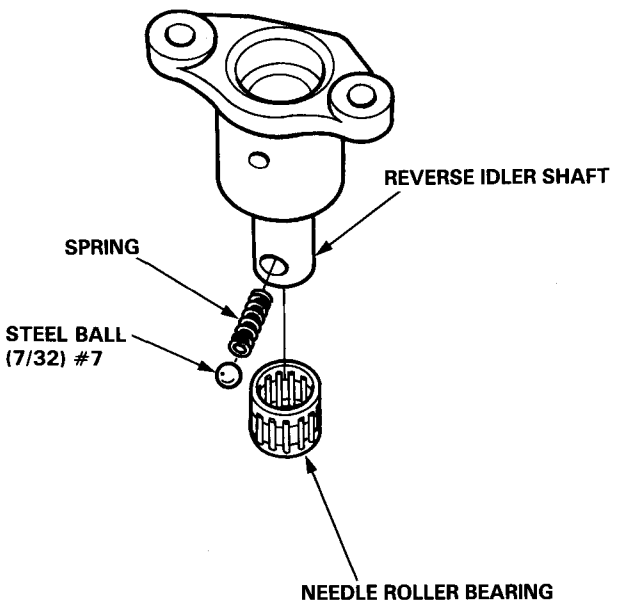

3. Install the reverse idler shaft holder into the transmission housing, then tighten the bolts.

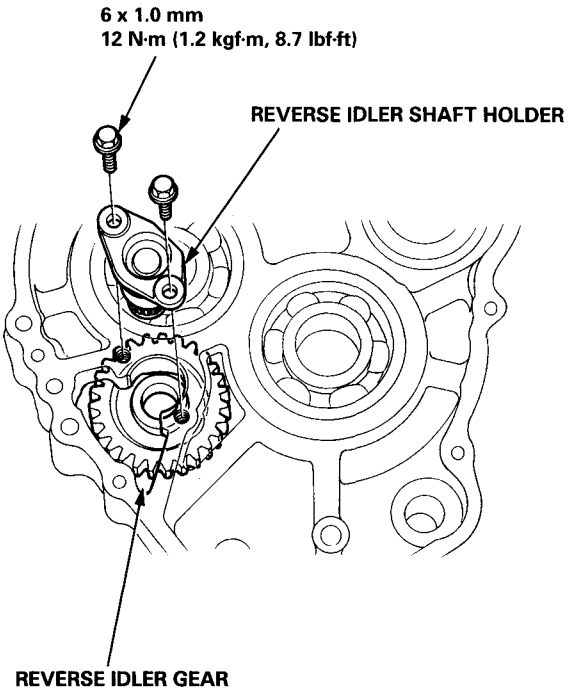

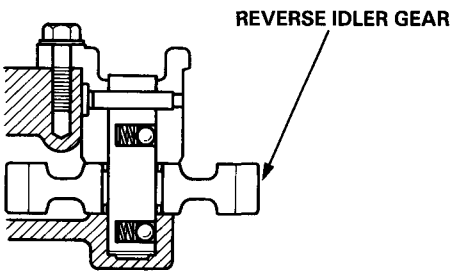

Manual Valve Detent Spring

Replacement/Adjustment

NOTE: Select the appropriate manual valve detent spring when these parts are replaced:

- Manual Valve
- Manual Valve Detent Spring
- Manual Valve Lever of Control Shaft

1. Install the main valve body, including the ATF pump gears, onto the torque converter housing, and tighten the main valve body bolts to 12 N-m (1.2 kgf-m, 8.7 lbf-ft).
   See page 14-161.
2. Install the control shaft.
3. Install the manual valve detent spring on the main valve body and tighten the spring bolt to 14 N-m (1.4 kgf-m, 10 lbf-ft).
4. Set the manual valve to the [N] position.
5. Measure the distance between the main valve body and manual valve as shown.

DISTANCE: 28.0 - 29.0 mm (1.102 - 1.142 in)

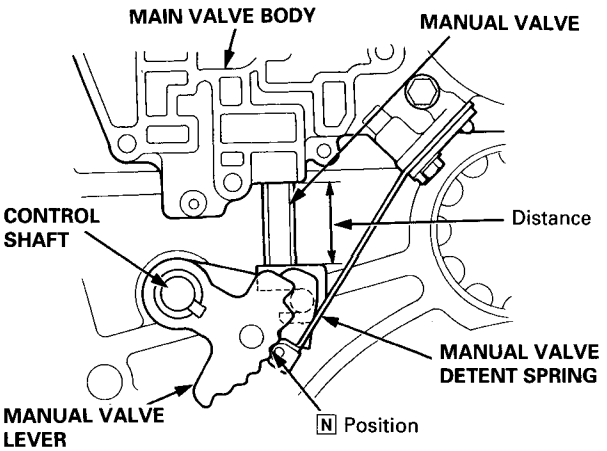

6. If the measurement is out of tolerance, select the appropriate manual valve detent spring using the table below, then install it and recheck it.

MANUAL VALVE DETENT SPRING

No.	Part Number	Length
1	24618 – PR9 – 000	103.5 mm (4.07 in)
2	24619 – PR9 – 000	104.0 mm (4.09 in)
3	24620 – PR9 – 000	104.5 mm (4.11 in)

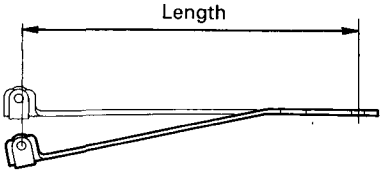

Parking Brake Stopper

Inspection/Adjustment

1. Set the parking brake lever in the [P] position.
2. Measure the distance between the face of the parking pawl shaft and face of the parking shift arm roller pin as shown.

DISTANCE: 52.1-53.1 mm (2.051-2.091 in)

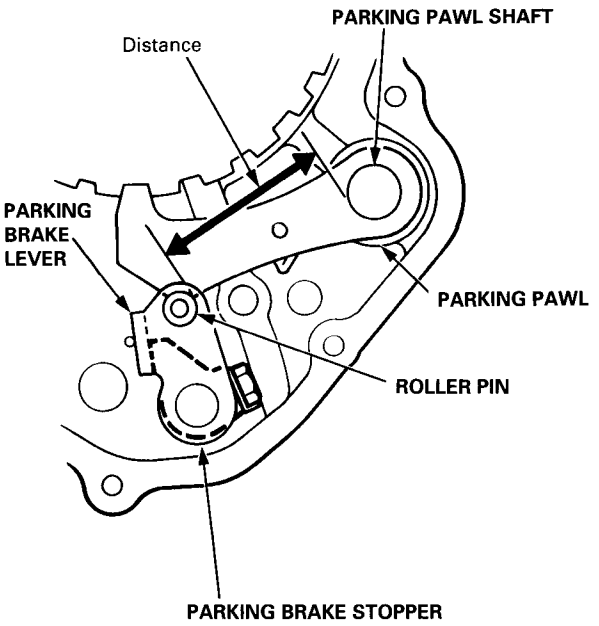

3. If the measurement is out of tolerance, select and install the appropriate parking brake stopper from the table below.

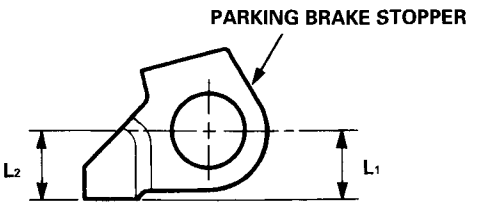

PARKING BRAKE STOPPER

Mark	Part Number	L_1	L_2
1	24537 – PA9 – 003	11.00 mm (0.433 in)	11.00 mm (0.433 in)
2	24538 – PA9 – 003	10.80 mm (0.425 in)	10.65 mm (0.419 in)
3	24539 – PA9 – 003	10.60 mm (0.417 in)	10.30 mm (0.406 in)

4. After replacing the parking brake stopper, make sure the distance is within tolerance.

Reassembly

NOTE: Coat all parts with ATF.

1. Reassemble the valve bodies in the following numbered sequence.

CAUTION: To prevent stripping the threads, press down on the accumulator cover while installing the bolts.

TORQUE:
6 x 1.0 mm: all bolts except ⑤⓪: 12 N·m (1.2 kgf·m, 8.7 lbf·ft)
6 x 1.0 mm: ⑤⓪: 14 N·m (1.4 kgf·m, 10 lbf·ft)

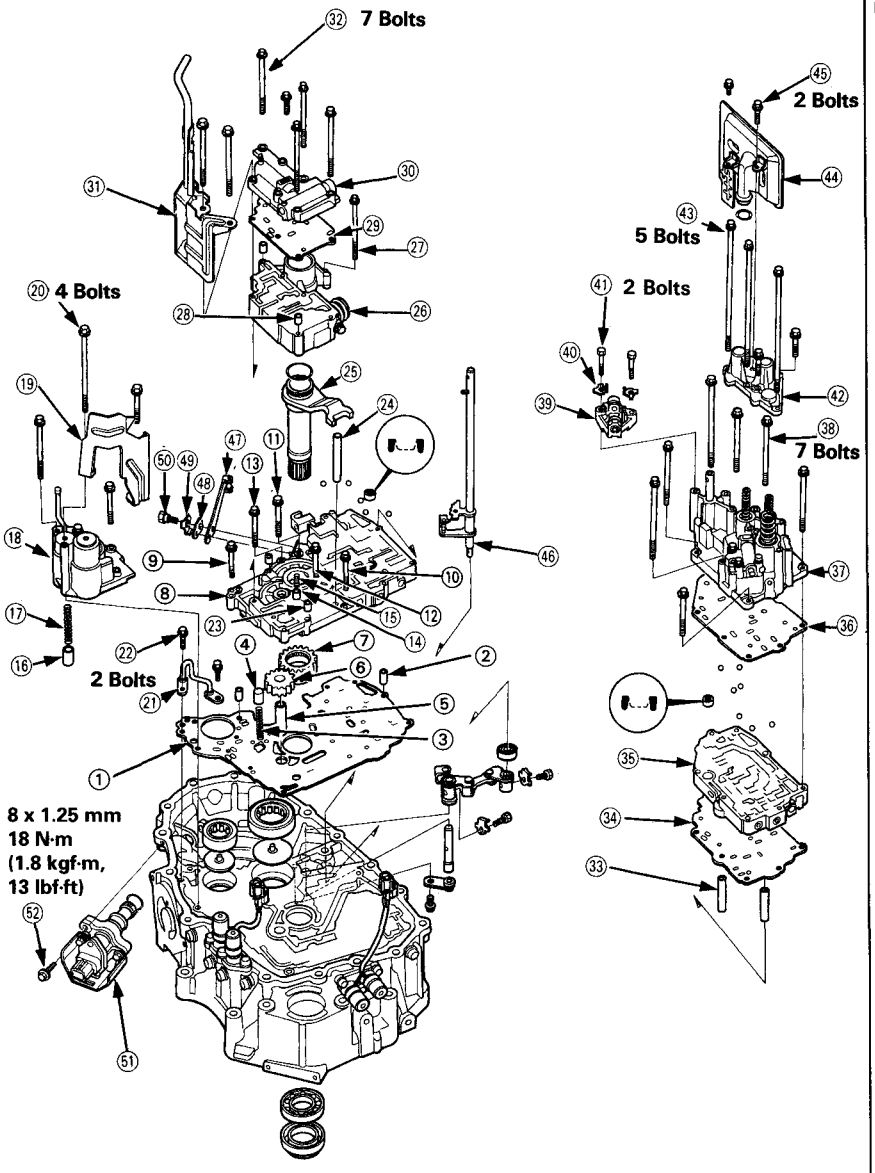

NOTE: Install the ATF pump driven gear with its chamfered side facing down.

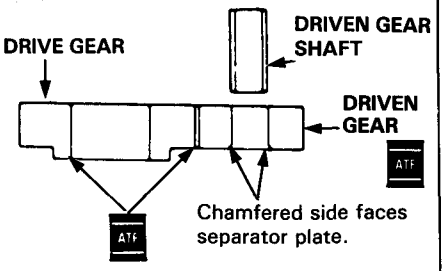

NOTE: Make sure the pump drive gear rotates smoothly in the normal operating direction and the pump shaft moves smoothly in the axial and normal operating directions.

CAUTION: If the pump gear and pump shaft do not move freely, loosen the valve body bolts, realign the shaft, and then retighten to the specified torque. Failure to align the pump shaft correctly will result in seized pump gear or pump shaft.

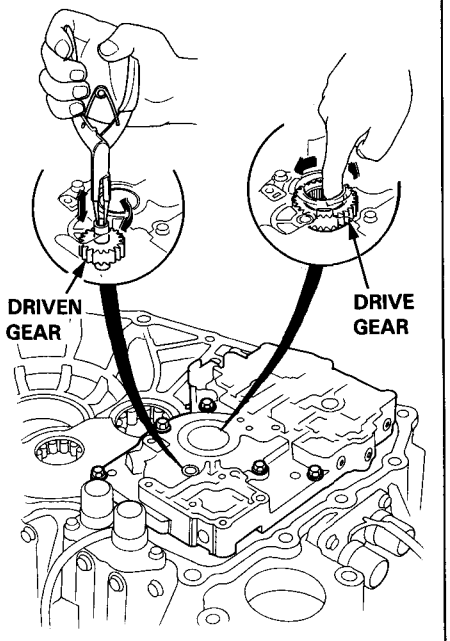

(cont'd)

Reassembly (cont'd)

2. Assemble the transmission housing in the following numbered sequence.

NOTE: See page 14-159 when installing the reverse idler gear.

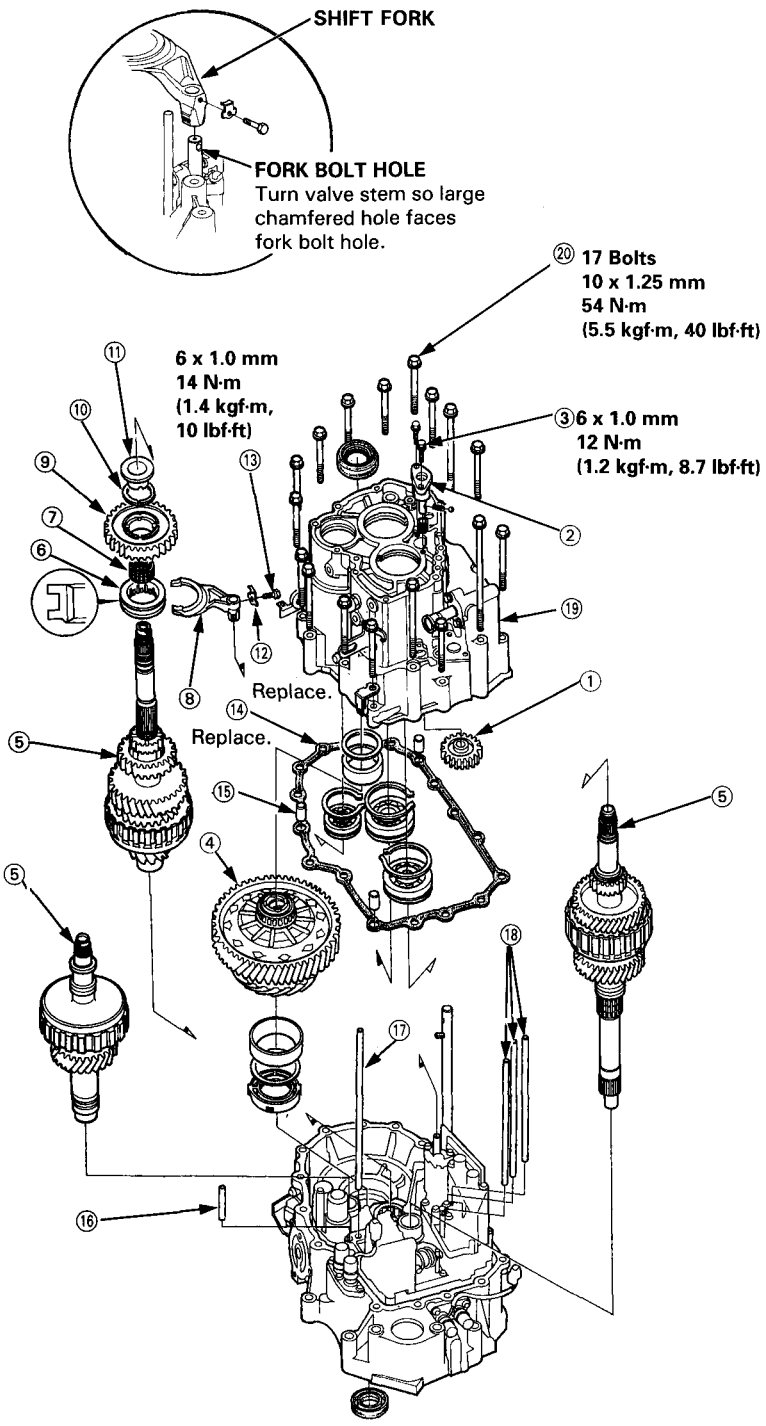

⑤ NOTE: Install the three shafts together.

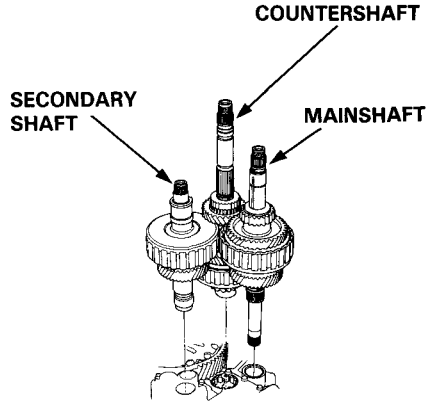

⑲ NOTE: Align the control shaft spring pin with the groove in the transmission housing.

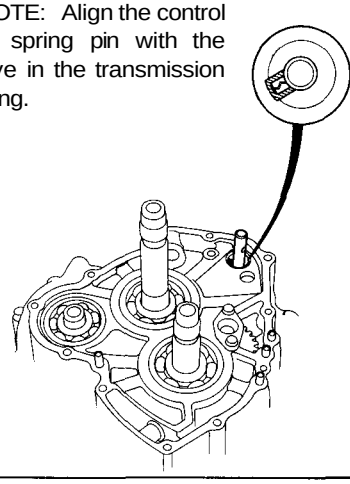

⑳ NOTE: Torque the bolts to 54 N-m (5.5 kgf-m, 40 lbf-ft) in the numbered sequence ① thru ⑰ in two or more steps.

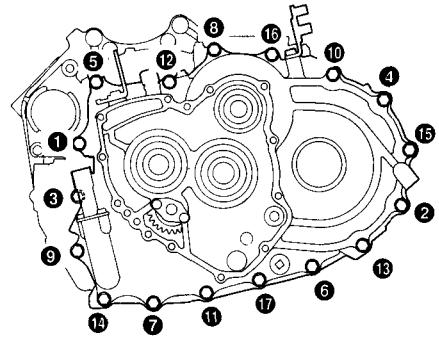

3. Assemble the transmission in the following numbered sequence.

NOTE: Before installing the O-rings, wrap the shaft splines with tape to prevent damage to the O-rings.

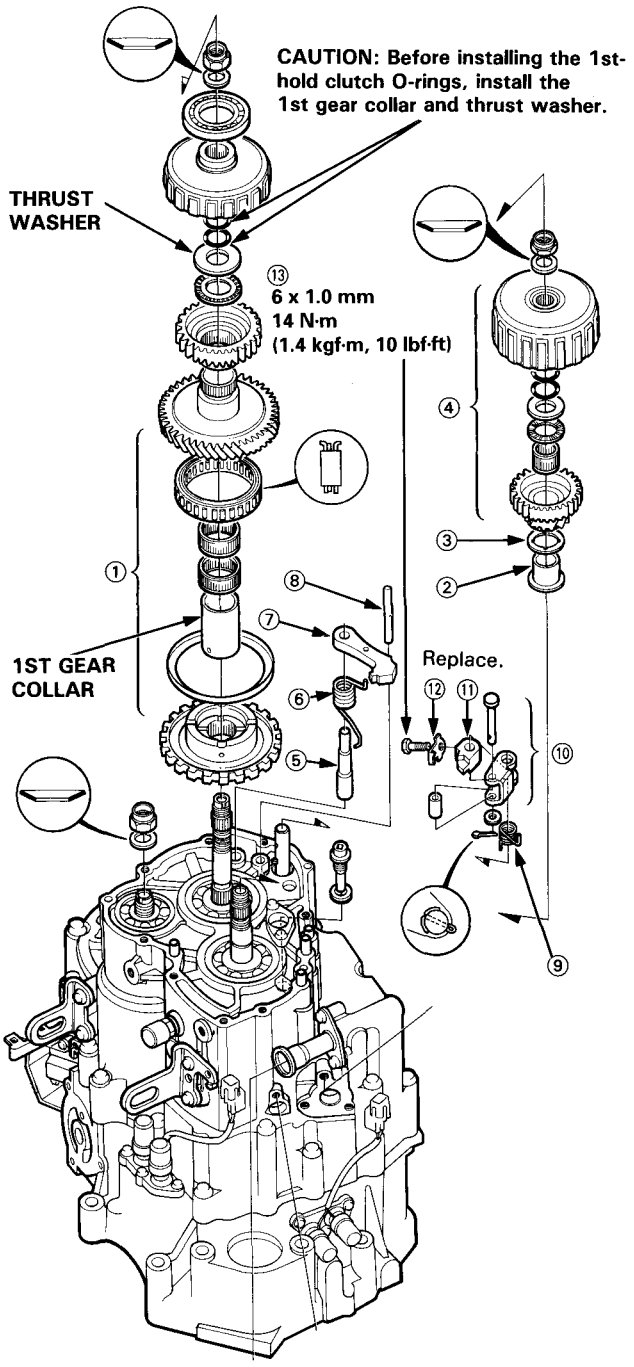

4. Set the parking brake lever in the [P] position, then verify that the parking brake pawl engages the parking gear.

5. If the pawl does not engage fully, check the parking brake pawl stopper clearance as described on page 14-160.

6. Tighten the lock bolt, then bend over the lock tab.

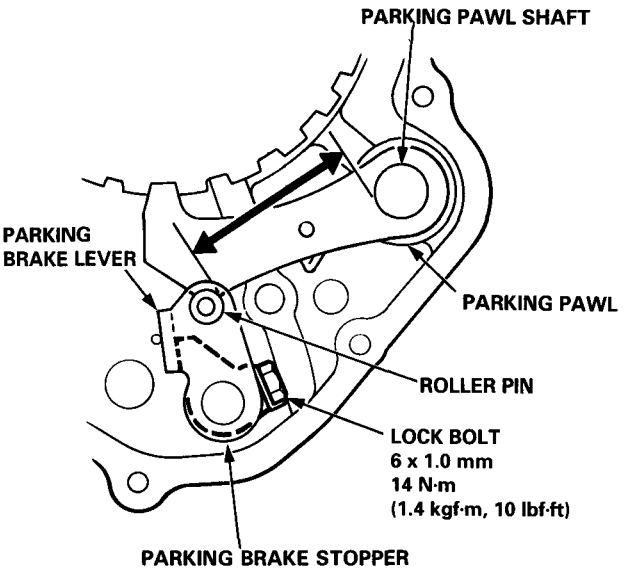

7. Install the special tool as shown, then shift to [P] position.

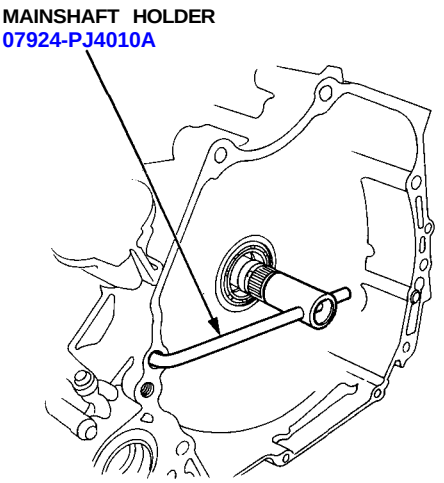

(cont'd)

Reassembly (cont'd)

8. Install a new conical spring washer and a new locknut on each shaft.

CAUTION: Install the conical spring washers in the direction shown.

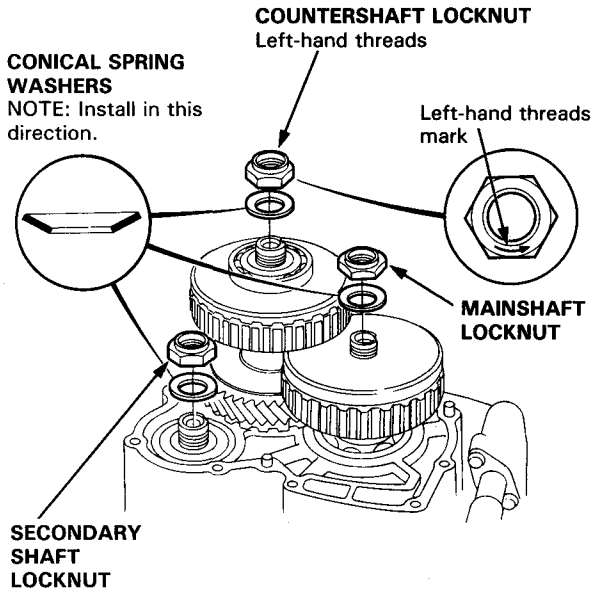

9. Tighten the locknuts to the specified torque.

TORQUE: 137 N-m (14.0 kgf-m, 101 lbf-ft)

NOTE: The countershaft locknut has left-hand threads.

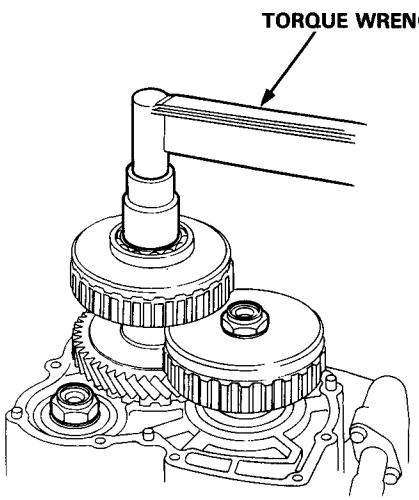

10. Stake each locknut into its shaft using a 3.5 mm punch.

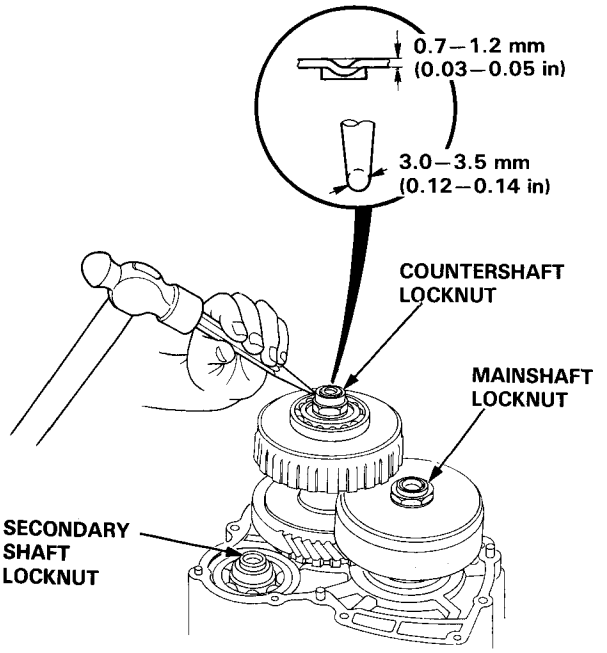

11. Install the feed pipes and the ball bearing in the left side cover, aligning the lugs of the 1st and 1st-hold clutch feed pipes with the grooves in the cover.

12. Install the snap ring.

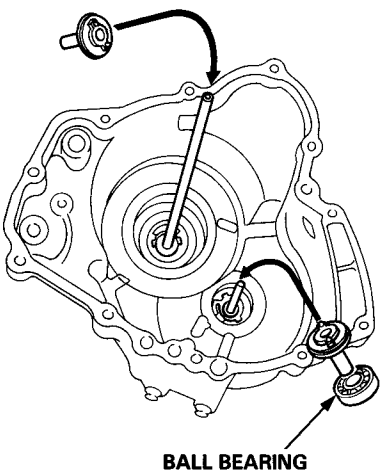

13. Install the left side cover.

TORQUE: 12 N-m (1.2 kgf-m, 8.7 lbf-ft)

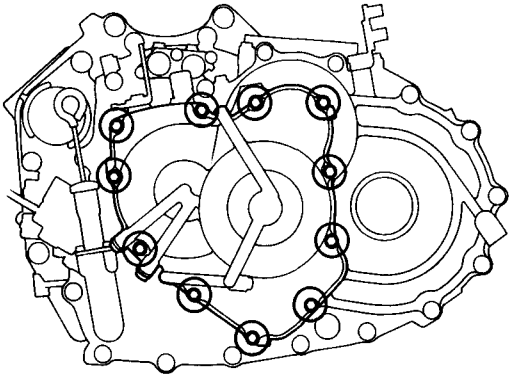

14. Install the countershaft and mainshaft speed sensors, vehicle speed sensor cover, and linear solenoid.
TORQUE: 12 N-m (1.2 kgf-m, 8.7 lbf-ft)

NOTE:
- Install the countershaft speed sensor with the countershaft speed sensor washer. The mainshaft speed sensor has no washer.
- See page 14-94 and 14-95 when installing the linear solenoid.

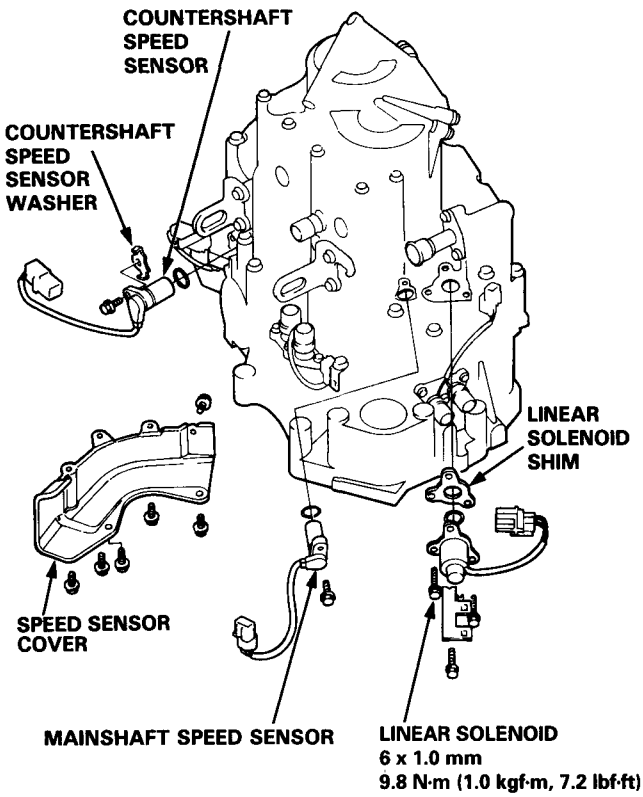

15. Install the control lever, new lock washers, change shaft, and change shaft cap on the other end of the control shaft. Tighten the bolts, then bend the tab against the bolt head.

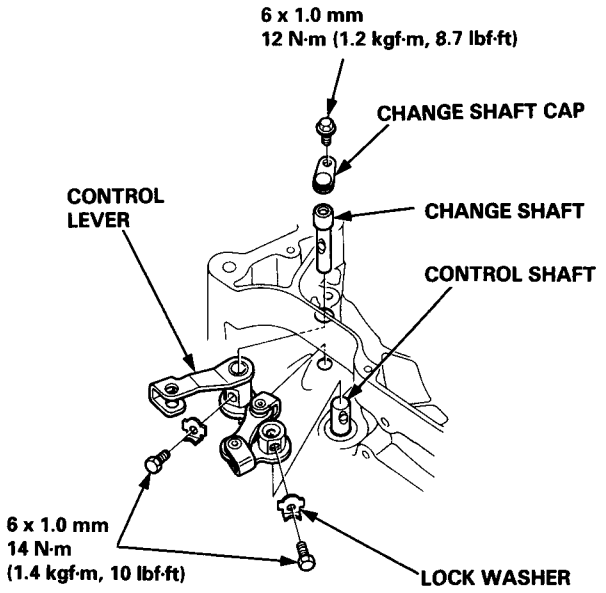

Torque Converter/Drive Plate

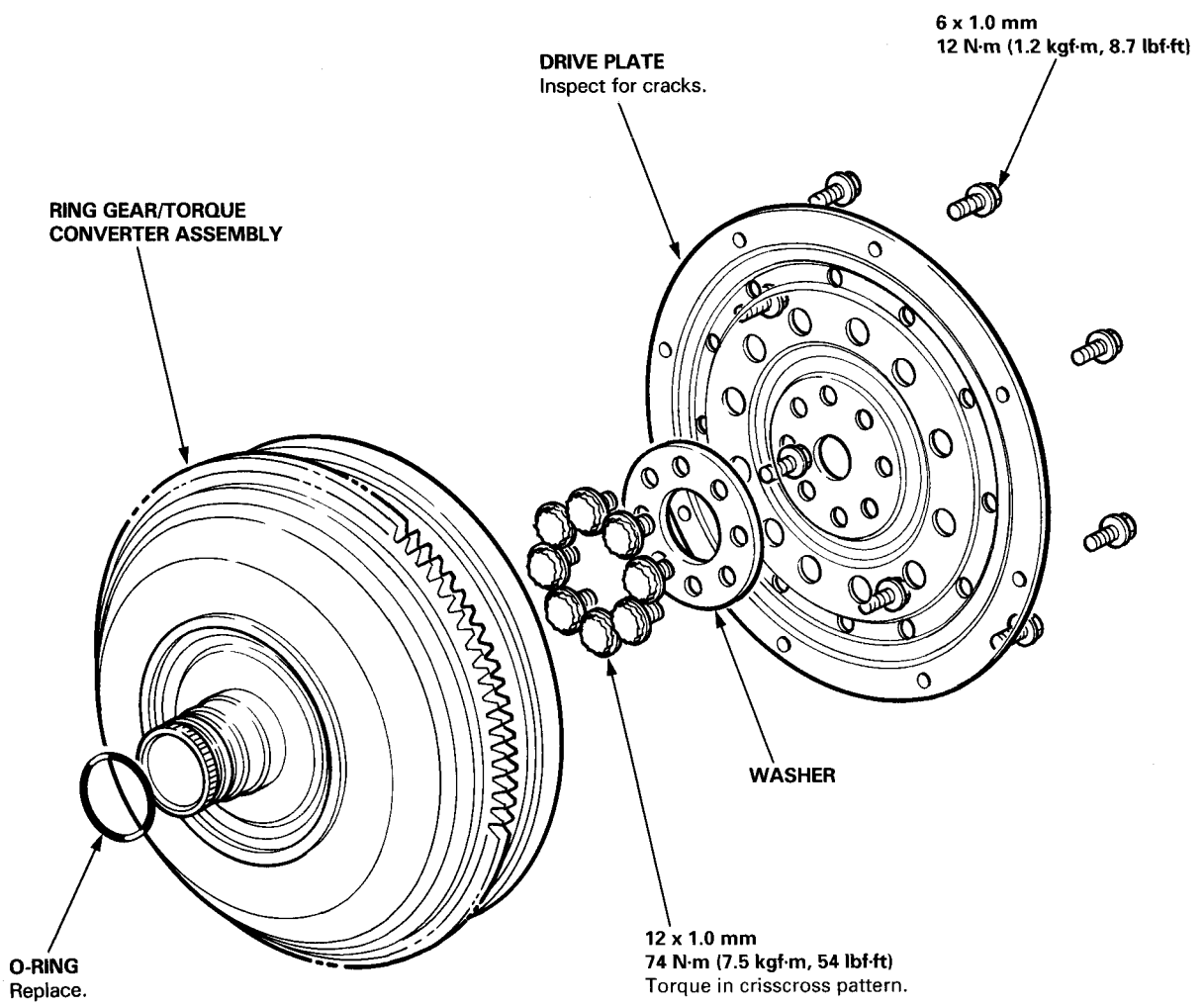

Installation

1. Place the transmission on a transmission jack, and raise it to engine level.
2. Check that the 14 mm and 10 mm dowel pins are installed in the torque converter housing.
3. Install the three transmission housing mounting bolts.
4. Install the three rear transmission mounting bolts.
5. Loosen the front engine mounting bolt, and install the two front engine mounting bolts to transmission side. Tighten the three bolts to the specified torque.
6. Remove the transmission jack.

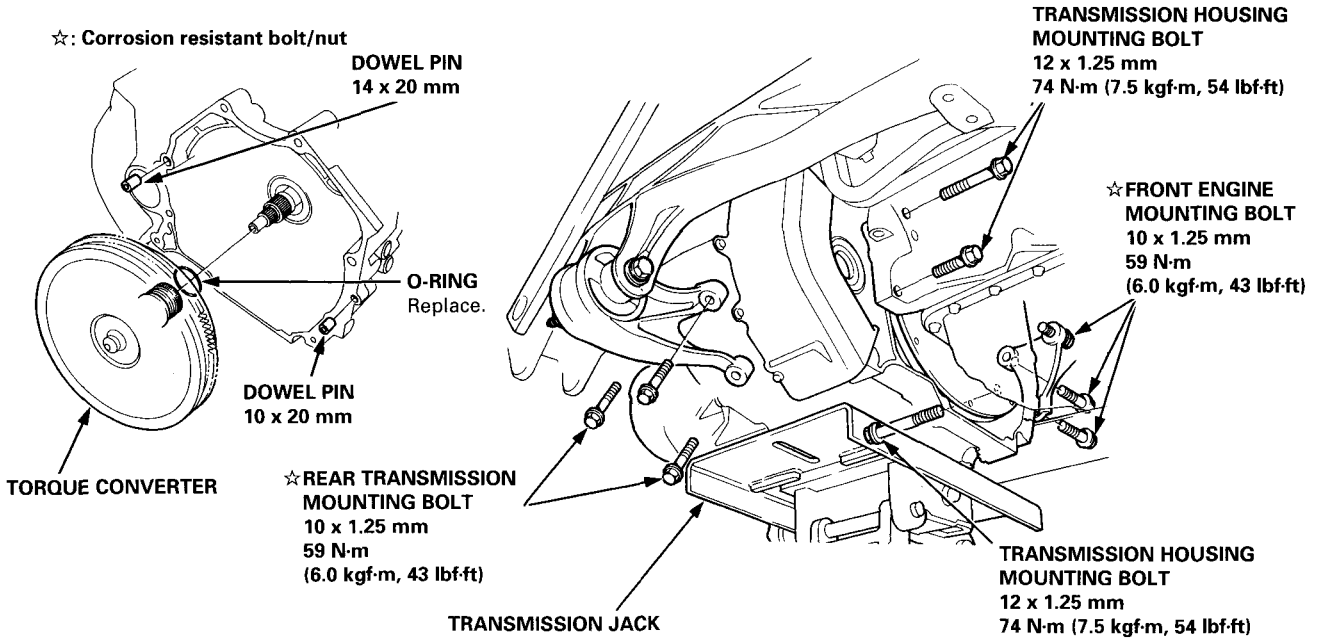

7. Attach the torque converter to the drive plate with eight bolts to 12 N-m (1.2 kgf-m, 8.7 lbf-ft). Rotate the crankshaft as necessary to tighten bolts to 1/2 of the specified torque, then final torque in a crisscross pattern. Check for free rotation after tightening the last bolt.
8. Install the torque converter cover.
9. Install the shift cable, shift cable holder, and shift cable cover.
10. Install the upper control arm mounting bolt.

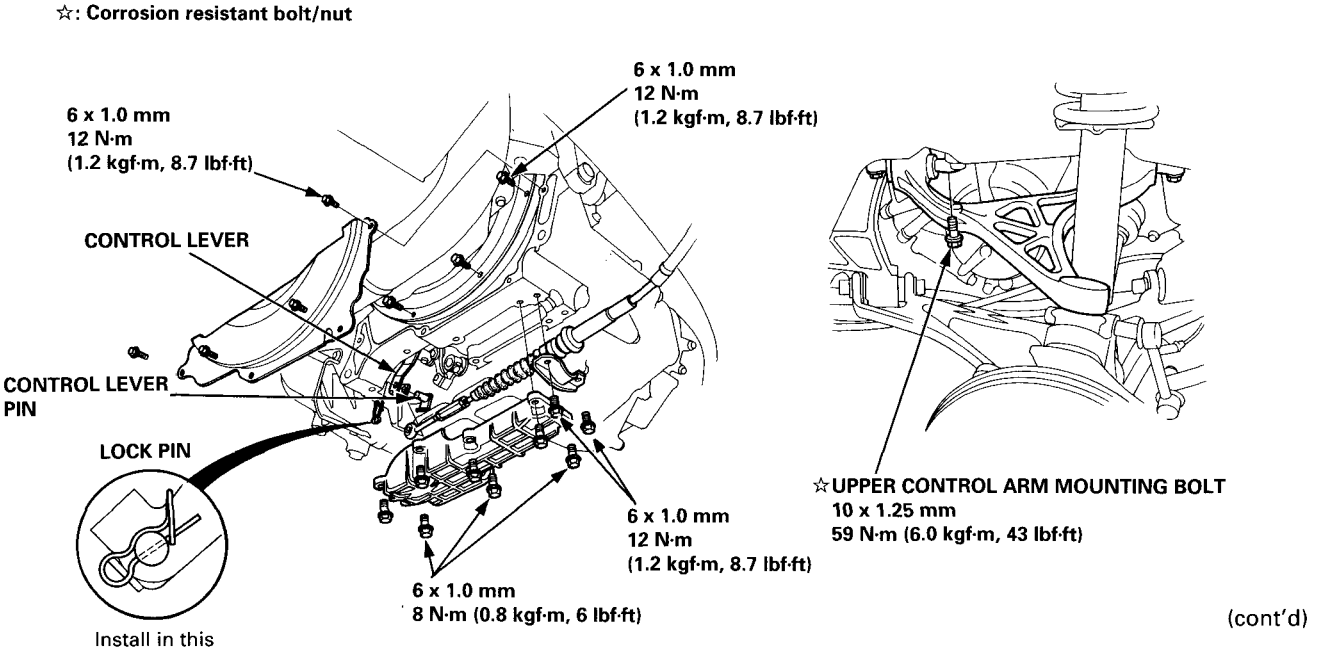

(cont'd)

Installation (cont'd)

11. Install a new set ring on the end of the left driveshaft and intermediate shaft. Apply a light film of grease around the set ring grooves, then center the new set ring on the shafts. The grease keeps the set ring centered, making shaft installation easier.
12. Install the left driveshaft.
13. Install the lower control arm to the side beam.
    CAUTION: Line up the reference marks on the adjusting bolt, adjusting cam, and lower control arm.
14. Install the damper fork bolt.
15. Install the toe control arm to the side beam.
    CAUTION: Make sure that the reference marks on the toe control arm are aligned.
16. Install the wheel sensor wire clamp and parking brake cable holder.

☆: Corrosion resistant bolt/nut

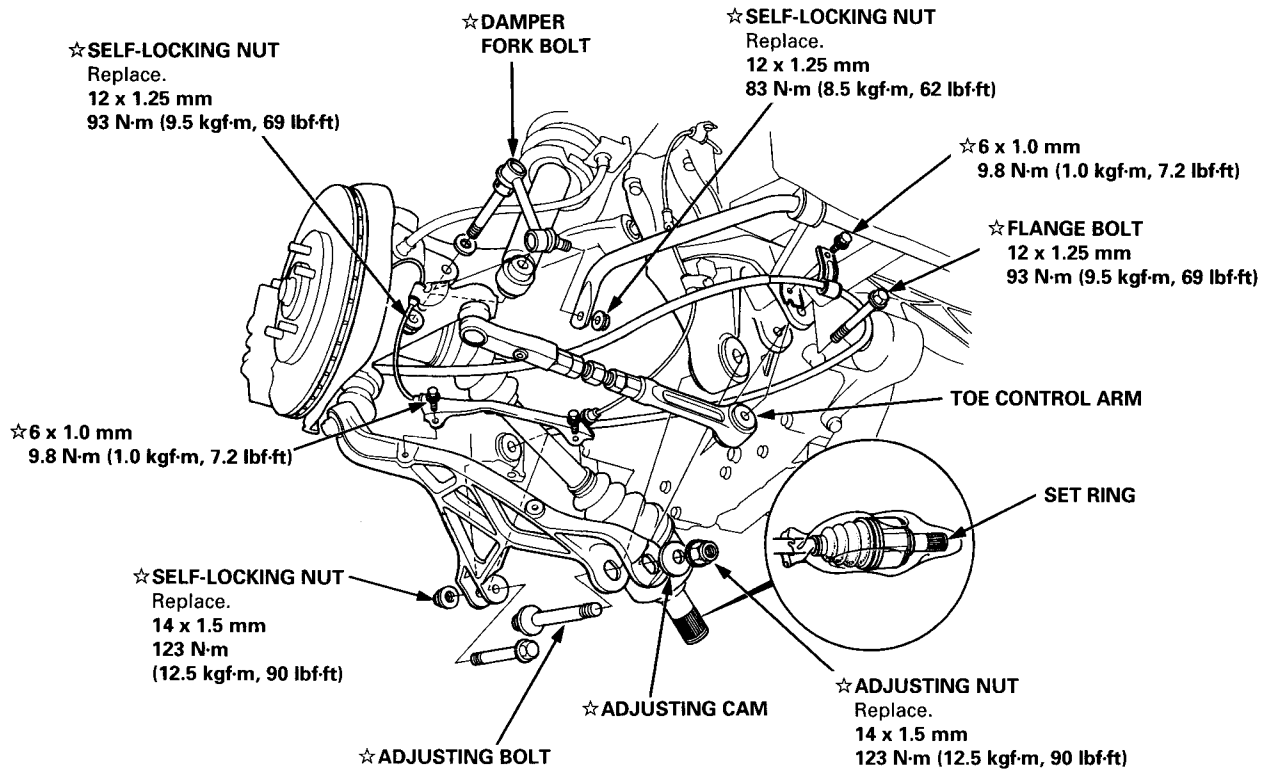

17. Install the intermediate shaft, and tighten the intermediate shaft mounting bolts to the intermediate shaft support base.
18. Install the intermediate shaft heat shield cover.

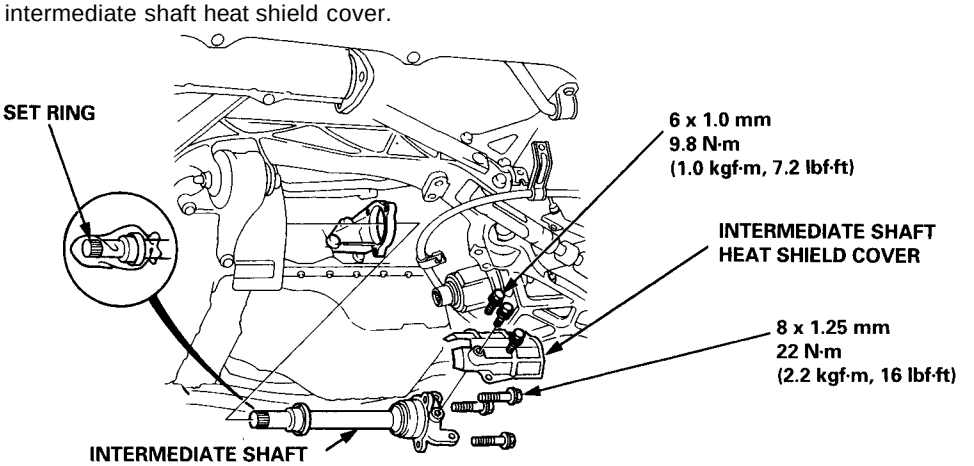

19. Install the right driveshaft on the intermediate shaft.
20. Install the lower control arm to the side beam.
    CAUTION: Line up the reference marks on the adjusting bolt, adjusting cam, and lower control arm.
21. Install the damper fork bolt.
22. Install the toe control arm to the side beam.
    CAUTION: Make sure that the reference marks on the toe control arm are aligned.
23. Install the wheel sensor wire clamp and parking brake cable holder.

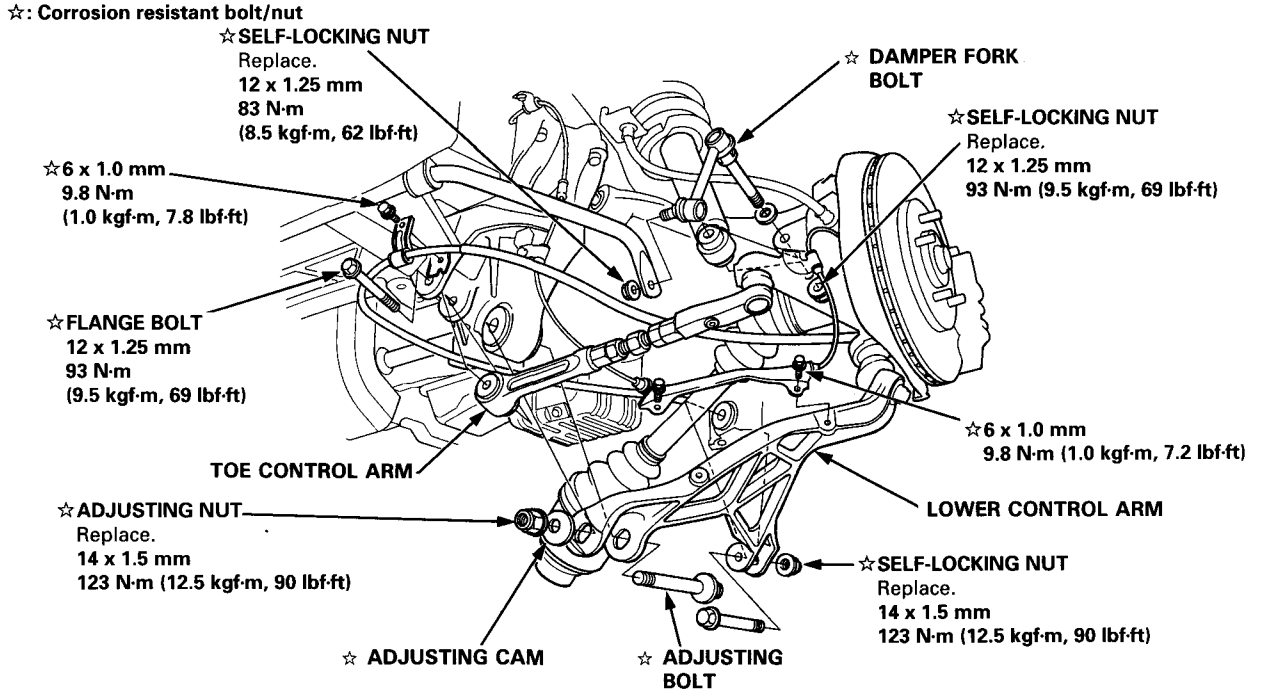

24. Install the front exhaust pipe A.
25. Install the rear beam rod.
26. Install the parking brake cable.
    ☆: Corrosion resistant bolt/nut

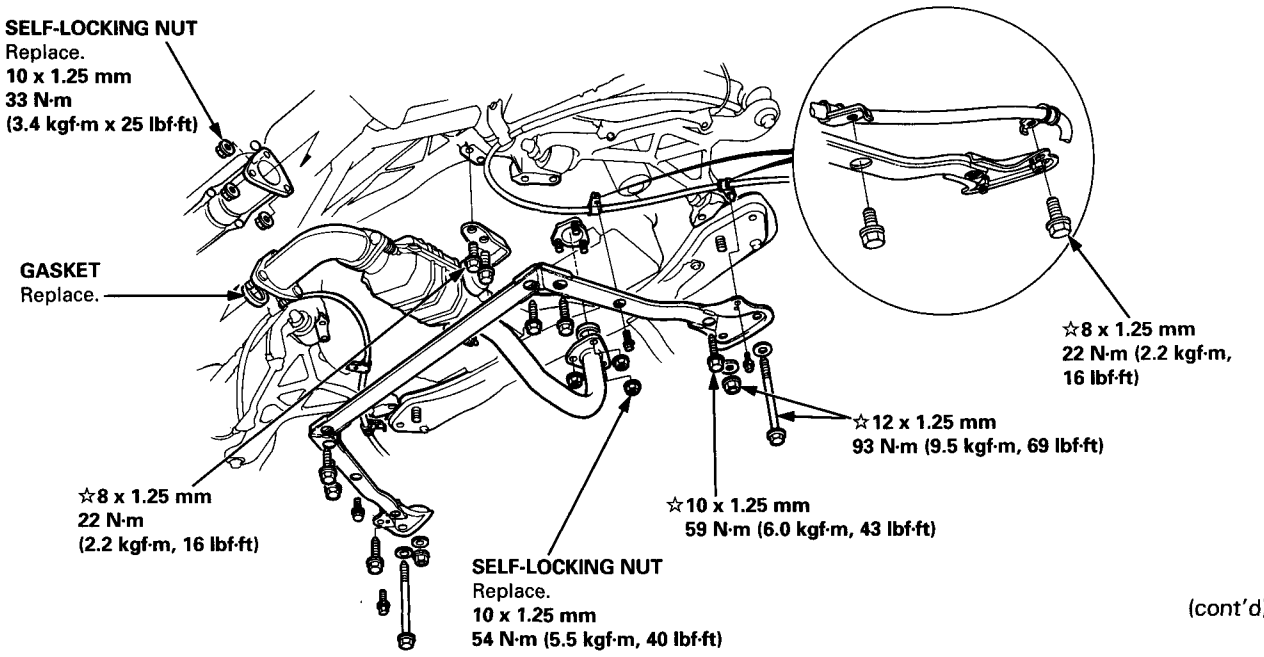

(cont'd)

Installation (cont'd)

27. Install the three transmission mounting bolts and the two transmission housing mounting bolts.
28. Install the starter motor, and tighten the starter motor mounting bolts.
29. Install the ATF cooler.
30. Connect the transmission ground cable, starter motor cable, solenoid valve wire connectors, and vehicle speed sensor (VSS) wire connectors.
31. Install the control box, and connect the control box connectors.
32. Install the air cleaner housing.
33. Install the strut bar.
    TORQUE: 38 N-m (3.9 kgf-m, 28 lbf-ft)
34. Refill the transmission with ATF.
35. Connect the positive (+) and negative (-) cables to the battery.
36. Inspect the rear camber (see section 18).
37. Start the engine. Set the parking brake, and shift the transmission through all gears three times. Check for proper shift cable adjustment.
38. Check the ignition timing (see section 23).
39. Let the engine reach normal operating temperature (the cooling fan comes on) with the transmission in [N] or [P] position, then turn it off and check the fluid level.
40. Road test as described on page 14-102 and 14-103.

☆: Corrosion resistant bolt/nut

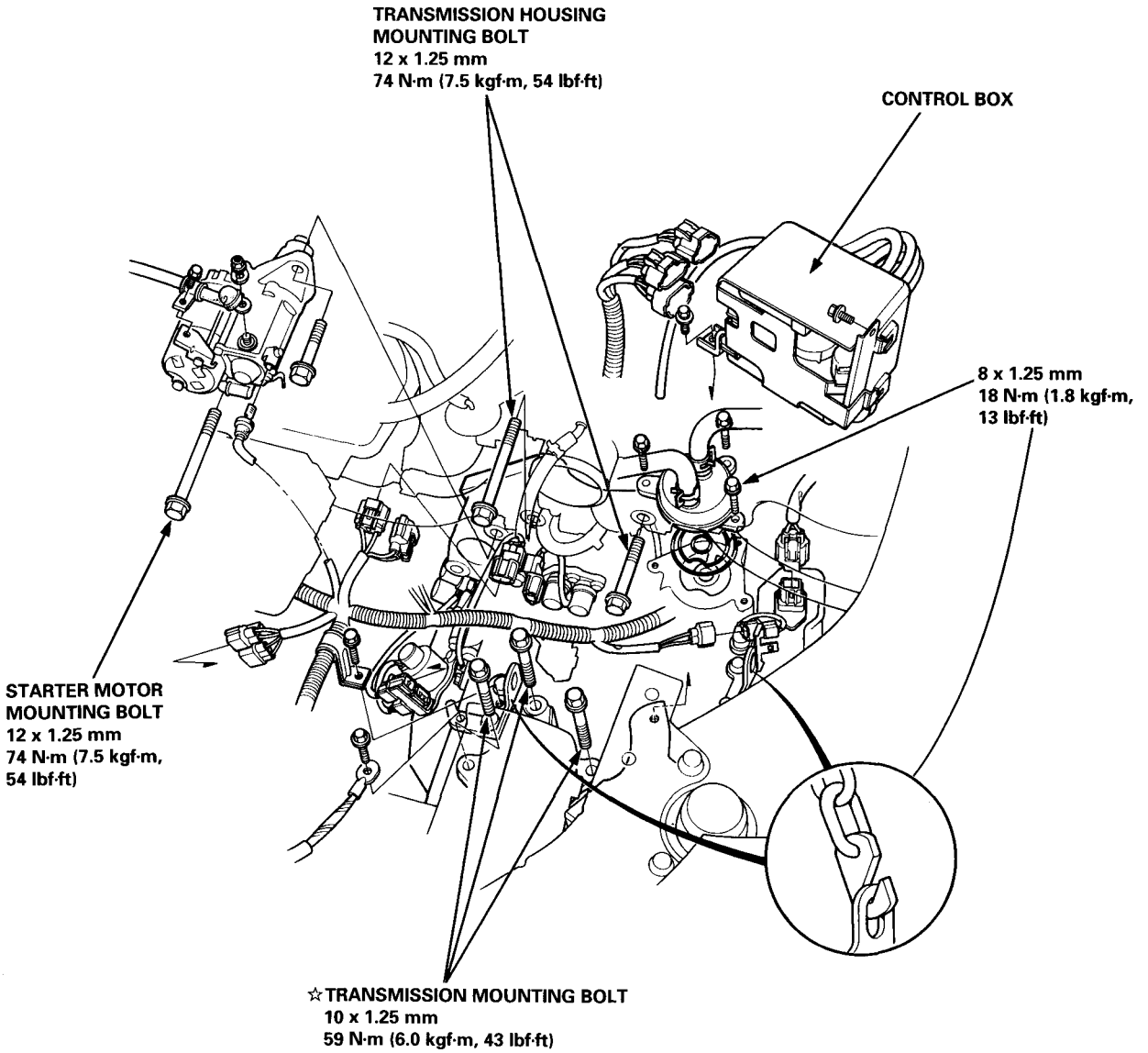

Shift Cable

Adjustment

1. Raise the vehicle (see section 1).
2. Shift to the [N] position.
3. Remove the shift cable cover.
4. Remove the control lever pin and lock pin from the control lever.

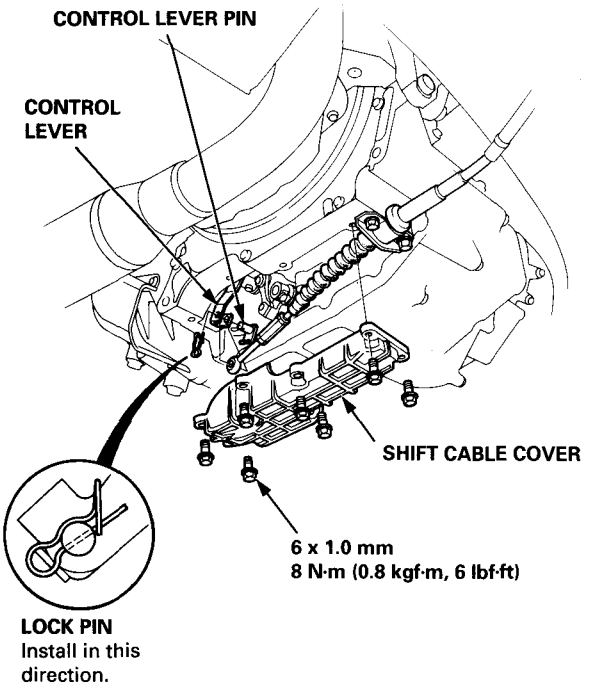

5. Shift the control lever to the [N] position.

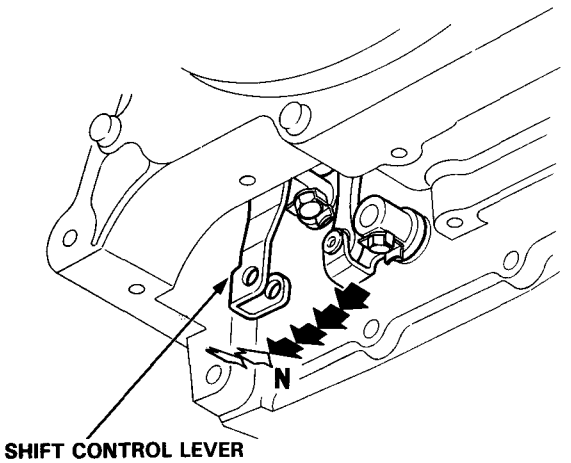

6. Check that the hole in the control lever is perfectly aligned with the hole in the shift cable.

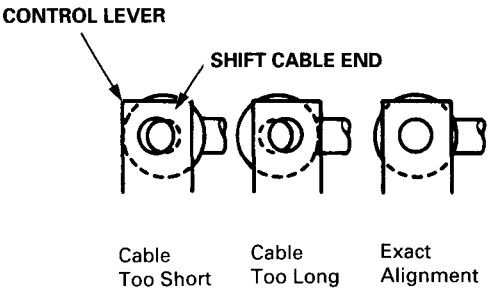

7. If the hole is not perfectly aligned, loosen the locknut on the shift cable and adjust if as needed.

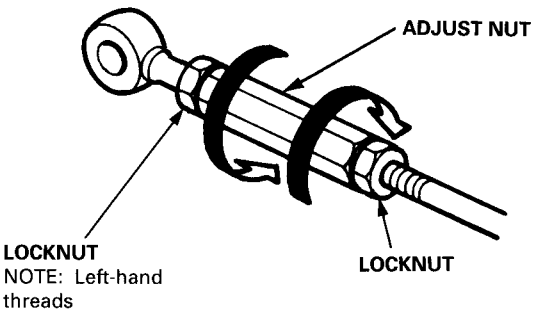

8. Tighten the locknut.
9. Install the control lever pin and lock pin.

   NOTE:
   - If you feel the control lever pin binding as you reinstall it, the cable is still out of adjustment and must be readjusted.
   - Install the lock pin as shown in step 4.

10. Install the shift cable cover.
11. Start the engine, and check the shift lever in all gears. If any gear does not work properly, refer to Troubleshooting on pages 14-98 thru 14-101.

Shift Cable

Removal/Installation

SRS components are located in this area. Review the SRS component locations, precautions, and procedures in the SRS (section 24) before performing repairs or service.

⚠ WARNING **Make sure lifts are placed properly (see section 1).**

1. Remove the center console panel (see section 20).
2. Remove the shift cable by removing the cotter pin and shift lever pin from the shift lever. Remove the mounting bolts from the bracket beam.
3. Remove the shift cable clamp.
4. Remove the shift cable holder and shift cable cover.
5. Remove the shift cable by removing the lock pin and control lever pin from the control lever.

   CAUTION: Take care no to bend the cable when removing it.
6. Install the shift cable in the reverse order of removal.
7. After installation, check the cable adjustment (see page 14-171).

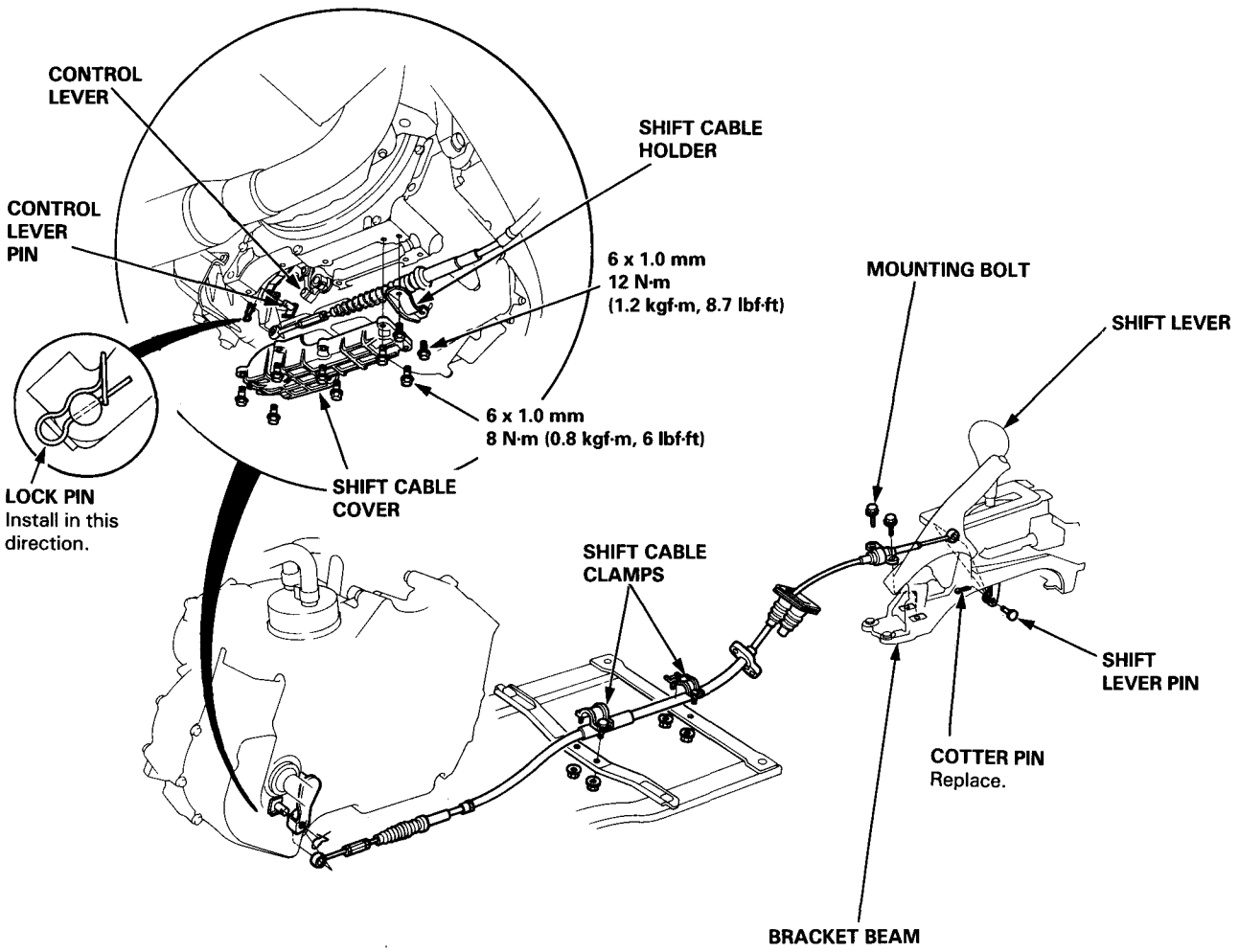

Shift Lever

SRS components are located in this area. Review the SRS component locations, precautions, and procedures in the SRS (section 24) before performing repairs or service.

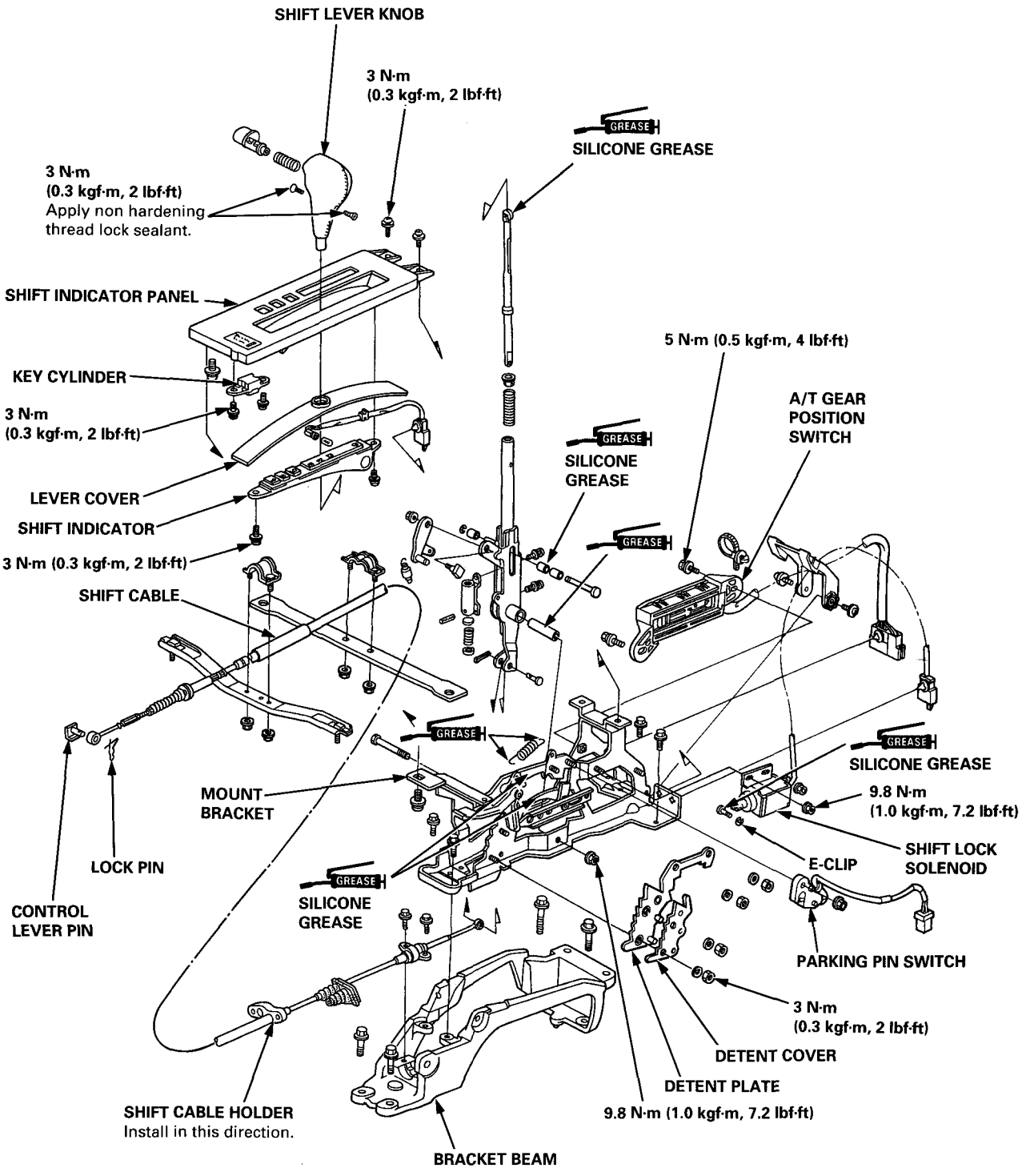

Shift Indicator Panel

Adjustment

SRS components are located in this area. Review the SRS component locations, precautions, and procedures in the SRS (section 24) before performing repairs or service.

1. Check that the index mark of the indicator aligns with the N mark of the shift indicator panel with the transmission in NEUTRAL.

2. If not aligned, remove the center console panel (see section 20).

3. Remove the shift indicator panel mounting screws, and move the panel to adjust it. Then reinstall the panel as described above.

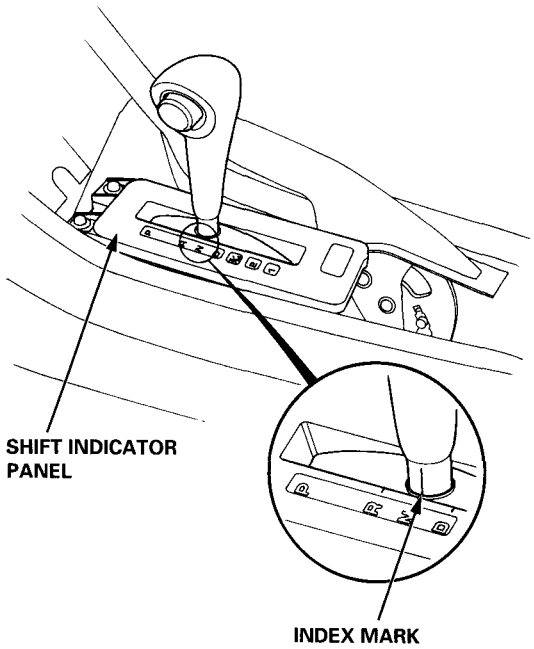

Differential

Manual Transmission

Special Tools 15–2
Component Location Index 15–3
Preset Torque Inspection 15–4
Bearing Replacement 15–5
Differential
  Disassembly 15–6
  Reassembly 15–7
Oil Seal Removal 15–11
Bearing Outer Race Replacement
  (Clutch Housing Side) 15–12
Bearing Preload Adjustment 15–12
Oil Seal Installation 15–14

Automatic Transmission

Special Tools 15–16
Component Location Index 15–17
Preset Torque Inspection 15–18
Bearing Replacement 15–19
Differential
  Disassembly 15–20
  Reassembly 15–23
Clutch Disc, Clutch Plate
  Replacement 15–22
Oil Seal Removal 15–25
Bearing Outer Race Replacement
  (Torque Converter Housing Side) 15–26
Bearing Preload Adjustment 15–26
Oil Seal Installation 15–28

Special Tools

Ref. No	Tool Number	Description	Qty	Page Reference
①	07GAD—SD40101	Bearing Driver Attachment	1	15-12
②	07MAD—PR90100	Attachment, 45 x 55 mm I.D.	1	15-5
③	07MAD—PR90200	Pilot, 32 x 50 mm	1	15-14
④	07MAJ—PR90100	Differential Inspection Tools	1	15-4, 15-6, 15-9, 15-11, 15-13
⑤	07746—0010500	Attachment, 62 x 68 mm	1	15-12
⑥	07746—0010600	Attachment, 72 x 75 mm	1	15-13
⑦	07749—0010000	Driver	1	15-12, 15-13, 15-14
⑧	07947—SD90100 or 07947—SD90101	Seal Driver Attachment	1	15-14
⑨	07965—SA00600	Bearing Driver Attachment	1	15-14

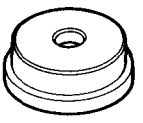

①

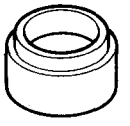

②

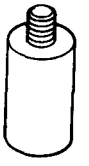

③

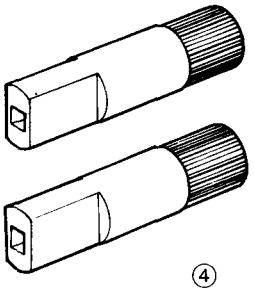

④

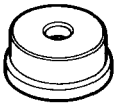

⑤

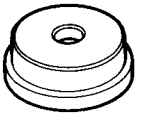

⑥

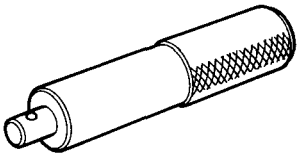

⑦



⑧

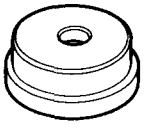

⑨

Differential

Illustrated Index

NOTE:

- If the parts marked with an asterisk (*) are replaced, the bearing preload must be adjusted (see page 15-12).
- If replacement is required, always replace the limited slip differential clutch set.

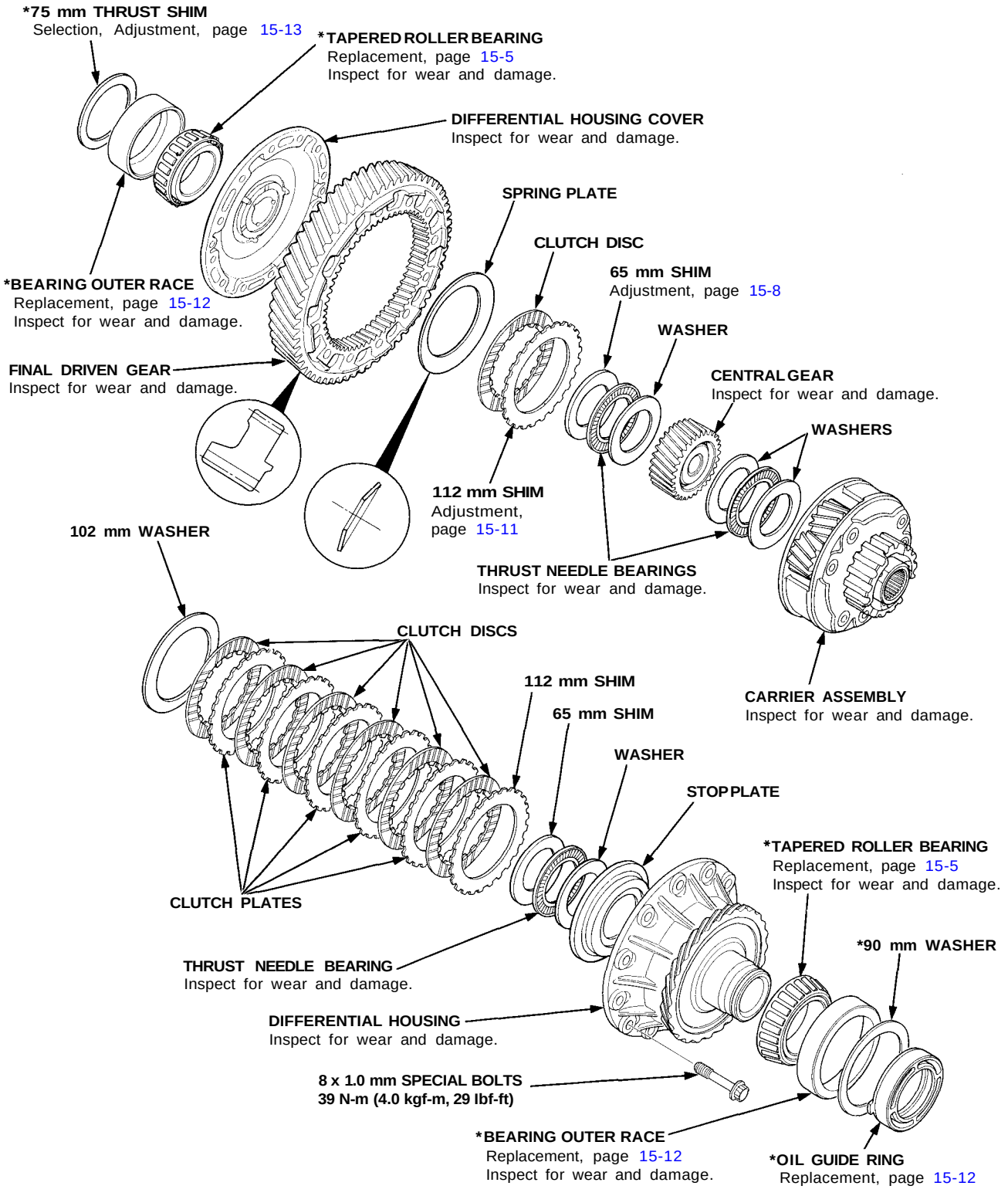

Preset Torque

Inspection

On-Vehicle:

1. Block the front wheels.
2. Shift to low gear.
3. Lift up rear wheels, and place the safety stand (Lift and Support Points, see section 1).
4. Measure preset torque clockwise using a torque wrench as shown.

   Standard: 118 - 275 N-m (12 - 28 kgf m, 87 - 203 lbf-ft)
   Service Limit: 60 N-m (6 kgf-m, 43 lbf-ft)

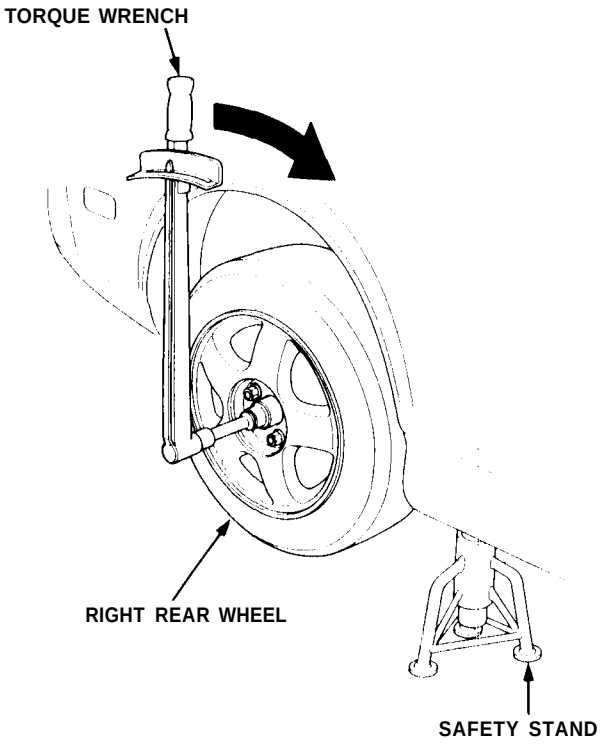

5. If preset torque is less than the service limit, replace the limited slip differential clutch set. Adjust the 65 mm (differential housing cover side) and 112 mm (differential housing cover side) shims whenever the clutch set is replaced.

Assembly:

1. Place one special tool in a vise. Place the left side of the differential assembly on the special tool, then preset the differential with 3 - 5 rotations, counter clockwise.

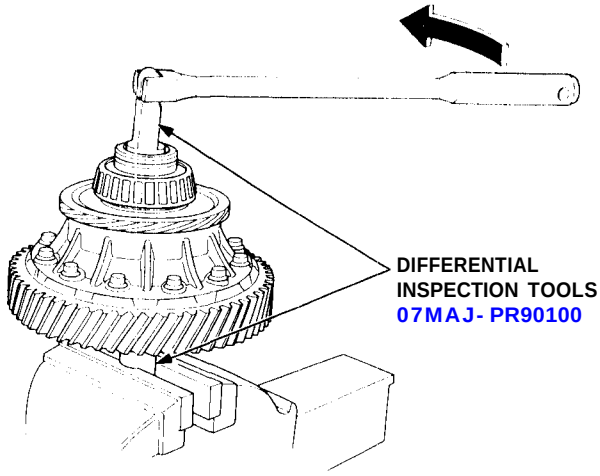

2. Measure preset torque counterclockwise using a torque wrench as shown.

   Standard: 59 - 137 N-m (6 - 14 kgf-m, 43 - 101 lbf-ft)
   Service Limit: 30 N-m (3 kgf-m, 22 lbf-ft)

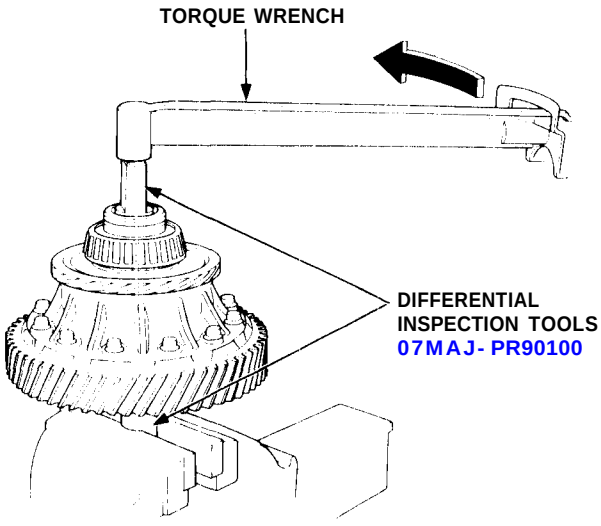

3. If preset torque is less than the service limit, replace the limited slip differential clutch set. Adjust the 65 mm and 112 mm shims whenever the clutch set is replaced.

Bearing

Replacement

NOTE:
- The bearing and outer race should be replaced as a set.
- Inspect and adjust the bearing preload whenever the bearing is replaced.

1. Remove the tapered roller bearings using the bearing pullers.

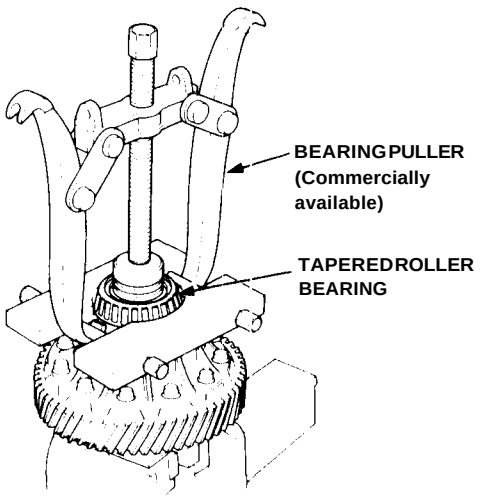

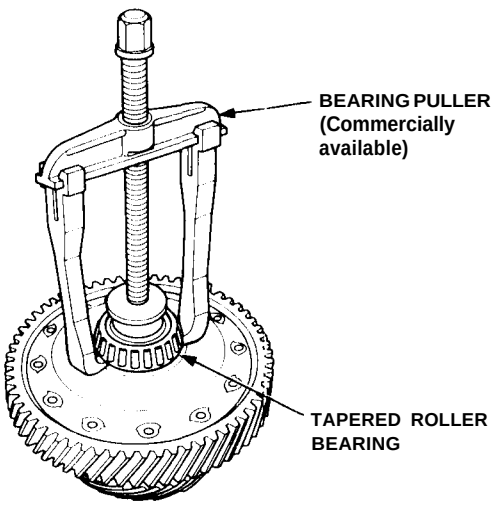

2. Install the tapered roller bearings using a special tool and a press. Press the tapered roller bearings squarely until they bottom against the case.

Transmission Housing Side:

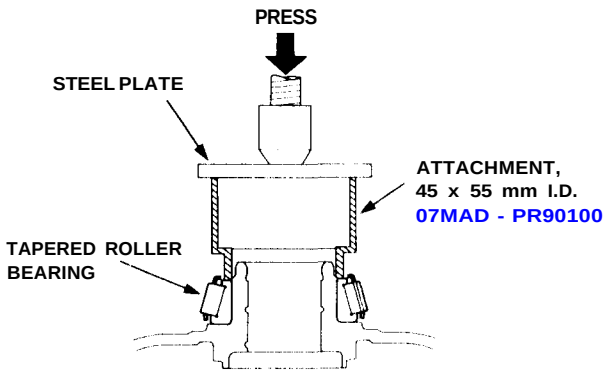

Clutch Housing Side:

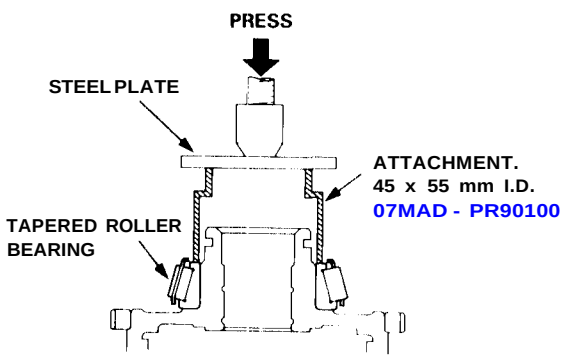

Differential

Disassembly

1. Hold the differential in a bench vise using a special tool, then remove the differential housing mounting bolts in a crisscross pattern in several steps.

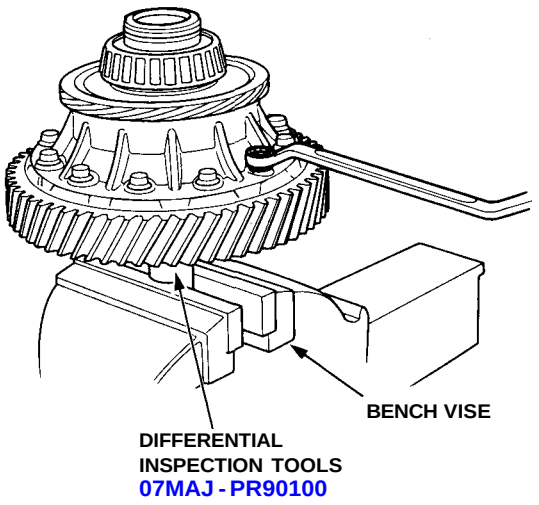

2. Remove the differential housing, stop plate, washer, thrust needle bearing, and 65 mm shim.

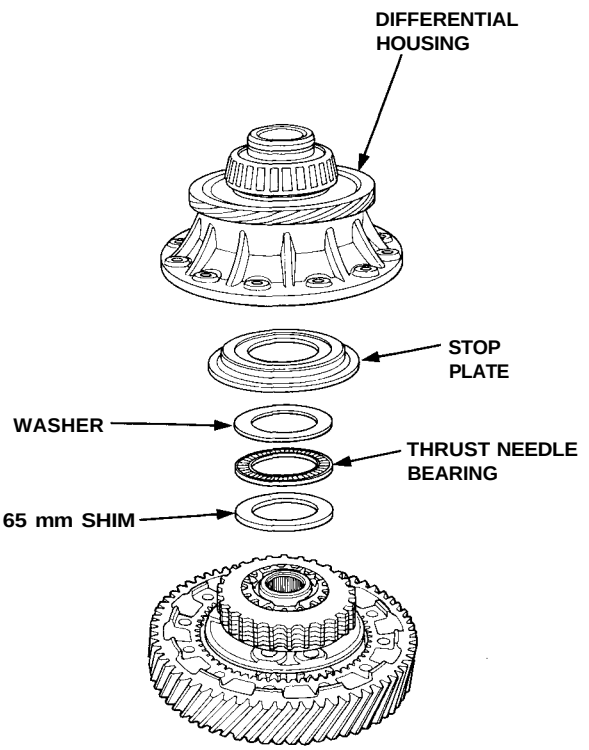

3. Remove the 112 mm shim, clutch discs, clutch plates, and 102 mm washer.

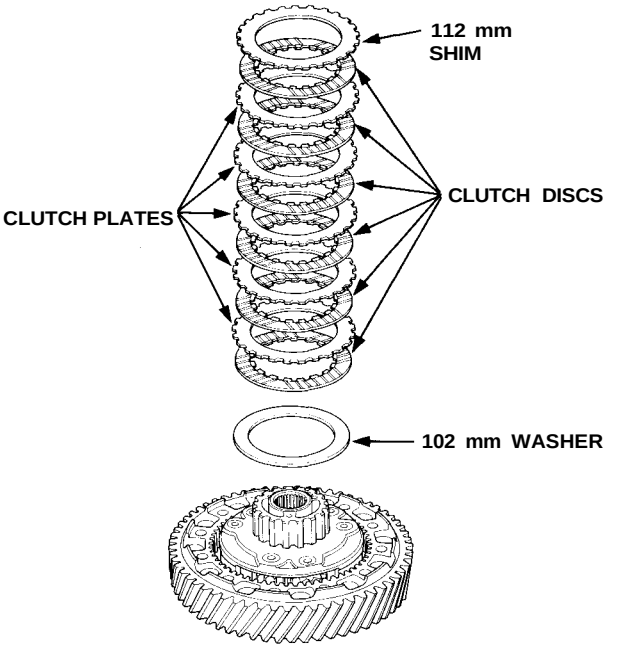

4. Remove the parts shown below.

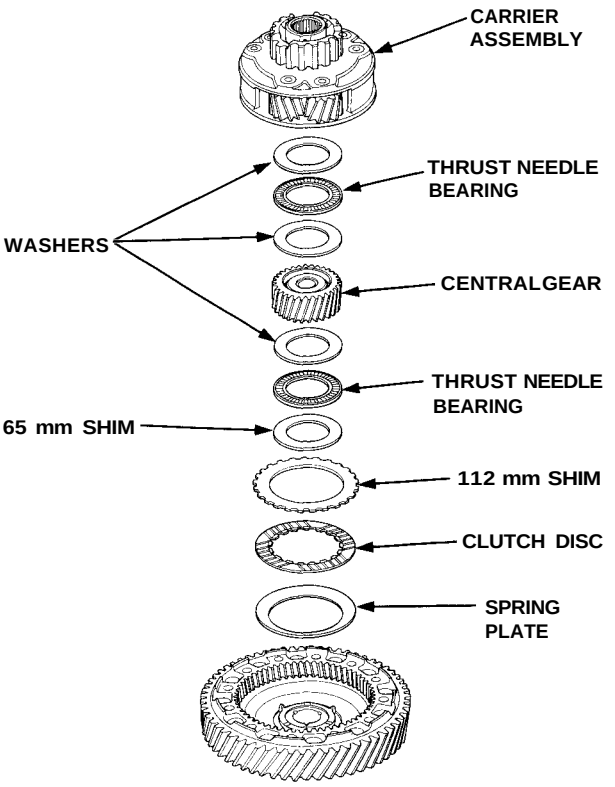

5. Screw two 8 x 1.0 mm bolts into the threaded holes in the differential housing cover to push it away from the final driven gear. Turn eacr bolt two turns at a time to provent cocking the differential housing cover excessively.

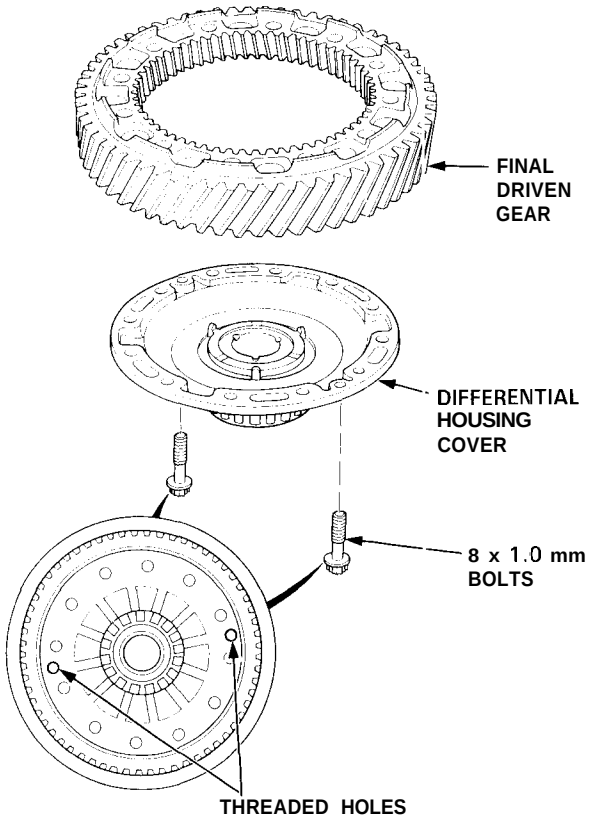

Reassembly

NOTE:

- If the limited slip differential clutch set was replaced, the 65 mm shim (differential housing cover side) and 1 1 2 mm shim (differential housing cover side) must be adjusted.
- Reassemble the parts in the same order and direction they were before disassembly.
- Lubricate the clutch disc surface with transmission oil.

1. Reassemble the parts as shown below. Position the 65 mm shim with the thickness stamp mark facing up.

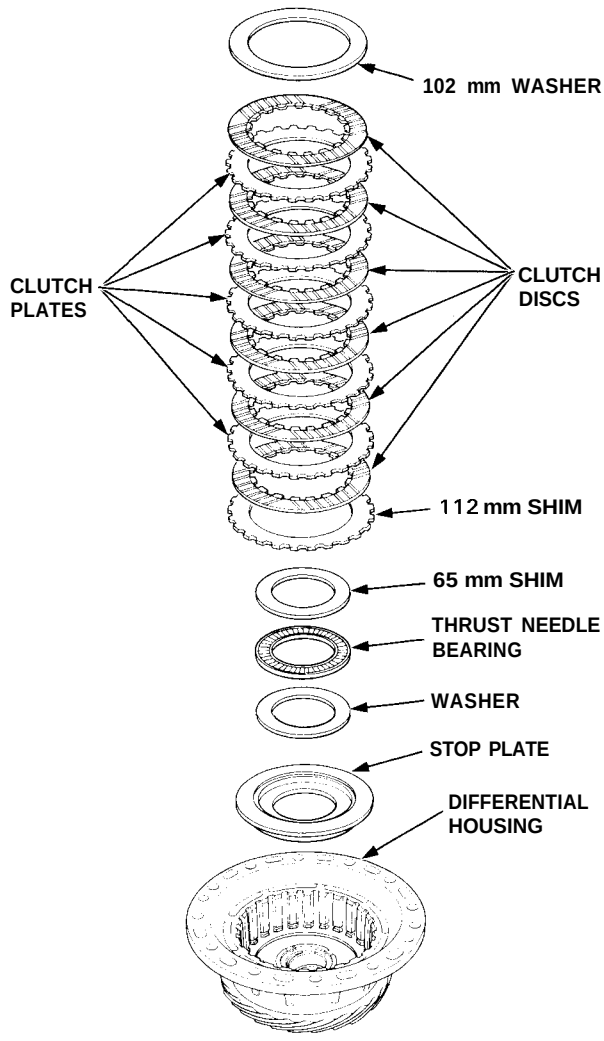

(cont'd)

Reassembly (cont'd)

2. Install the carrier assembly.

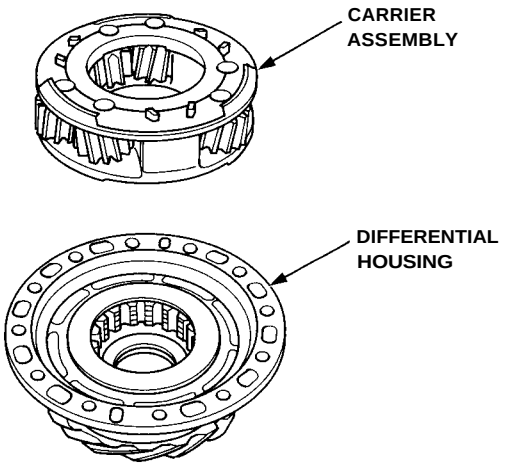

3. Install the final driven gear. Align the mark on the differential housing cover with the mark on the final driven gear.

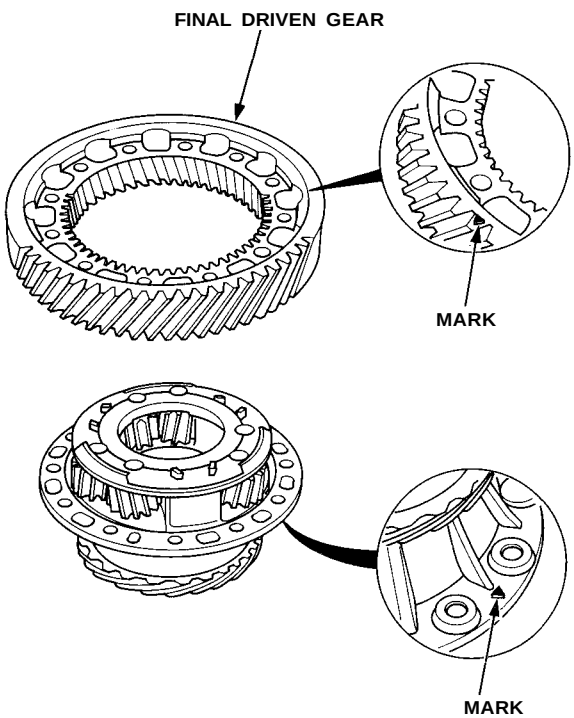

4. Install the washers, thrust needle bearing, and central gear.

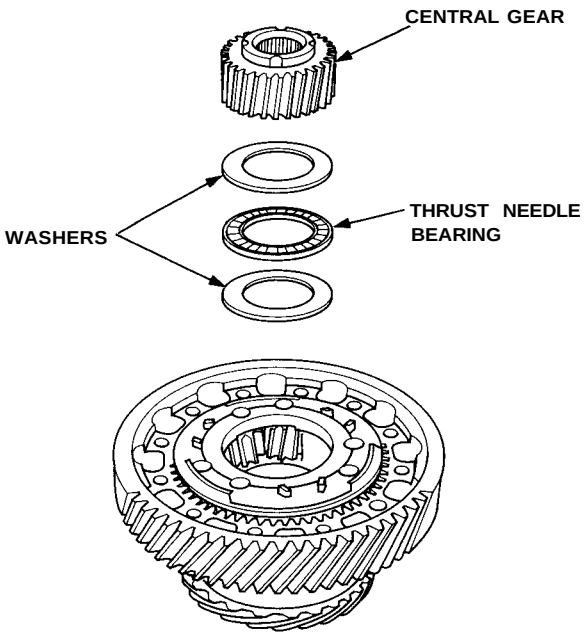

- **65 mm shim adjustment**

5. Clean the gear end surface on the central gear.

6. Set the plastigauge (Blue) strip on the central gear at four points in a crisscross pattern.

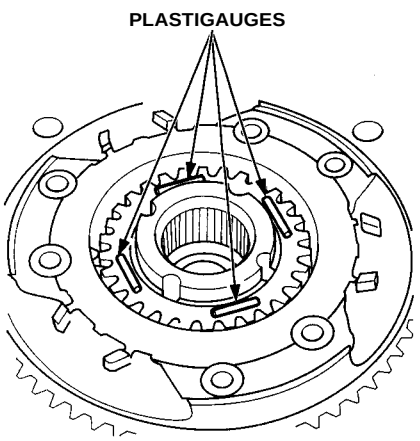

7. Install the washer, thrust needle bearing, 65 mm shim, 112 mm shim, clutch disc, and spring plate. Be careful not to move the plastigauge when installing the washer. Position the 65 mm shim with the thickness stamp mark facing up.

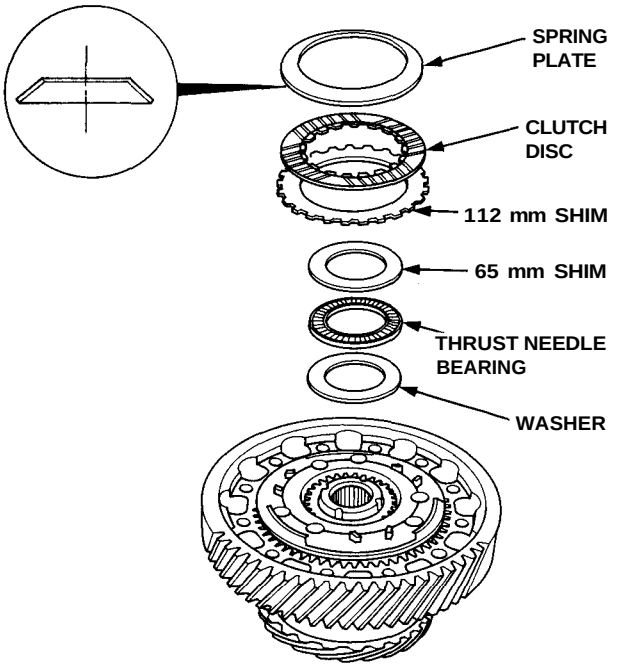

8. Align the marks, then install the differential housing cover.

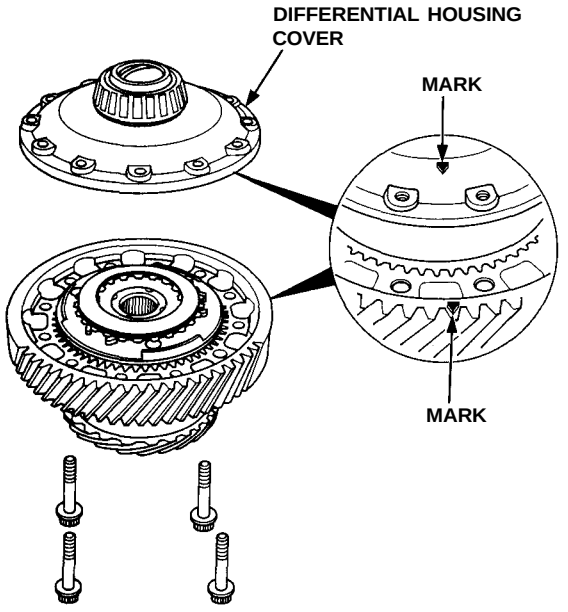

9. Tighten the mounting bolts in a crisscross pattern in several steps.

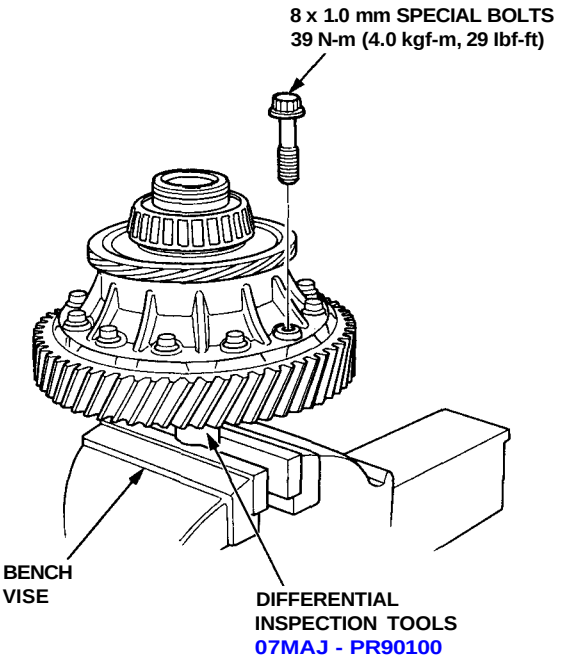

10. Remove the parts shown below.

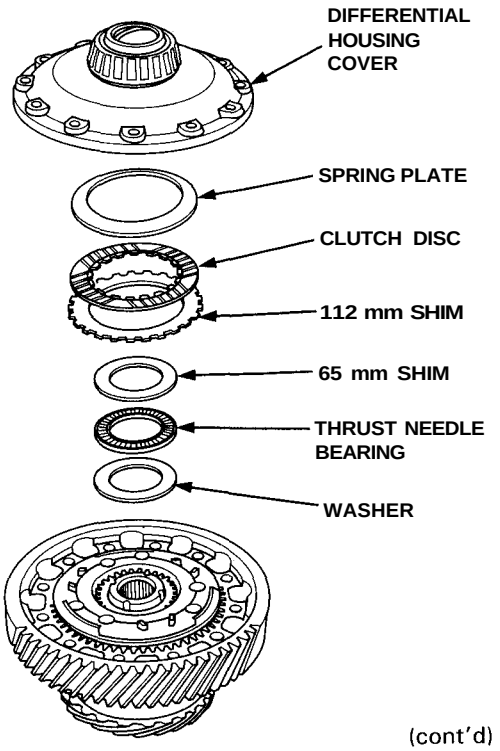

(cont'd)

Reassembly (cont'd)

11. Measure the widest part of the plastigauge.

Standard: 0.18-0.229 mm

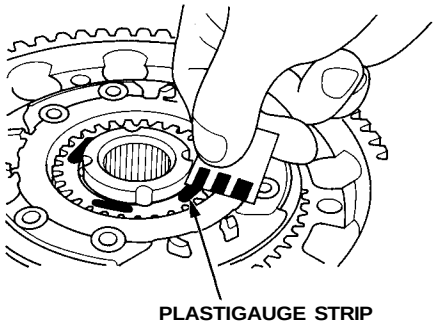

- If the plastigauge measures within the standard, go to step 14.
- If the plastigauge does not measure within the standard, continue with step 12.

12. Select the proper 65 mm shim based on the following table.

- If the measurement was less than 0.18 mm, install a thinner shim.
- If the measurement was more than 0.229 mm, install a thicker shim.

65 mm shim

	Part Number	Thickness
A	41371-PR8-F00	1.2 mm (0.0472 in)
B	41372-PR8-F00	1.3 mm (0.0512 in)
C	41373-PR8-F00	1.4 mm (0.0551 in)
D	41374-PR8-F00	1.5 mm (0.0591 in)
E	41375-PR8-F00	1.6 mm (0.0630 in)
F	41376-PR8-F00	1.7 mm (0.0669 in)
G	41377-PR8-F00	1.8 mm (0.0709 in)
H	41378-PR8-F00	1.9 mm (0.0748 in)
I	41379-PR8-F00	2.0 mm (0.0787 in)
J	41380-PR8-F00	2.1 mm (0.0827 in)
K	41381-PR8-F00	2.2 mm (0.0866 in)
L	41382-PR8-F00	2.3 mm (0.0906 in)
M	41383-PR8-F00	2.4 mm (0.0945 in)
N	41384-PR8-F00	2.5 mm (0.0984 in)
O	41385-PR8-F00	2.6 mm (0.1024 in)

13. After installing a thinner or thicker shim, be sure to recheck the measurement with plastigauge.

- After installing a thinner shim:
  If the measured value is less than 0.18 mm, select the next thinner shim, and recheck.
  If the new value is more than 0.229 mm, the selected shim is OK.
- After installing a thicker shim:
  If the measured value is more than 0.229 mm, select the next thicker shim, and recheck.
  If the new value is less than 0.18 mm, take the shim you chose at the step 12.

14. Install the washer, thrust needle bearing, 65 mm shim, 112 mm shim, clutch plate, clutch disc, and spring plate. Position the 65 mm shim with the thickness stamp mark facing up.

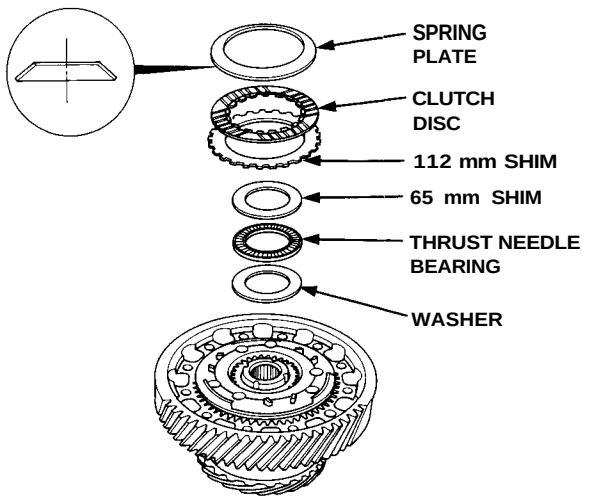

15. Align the marks, then install the differential housing cover.

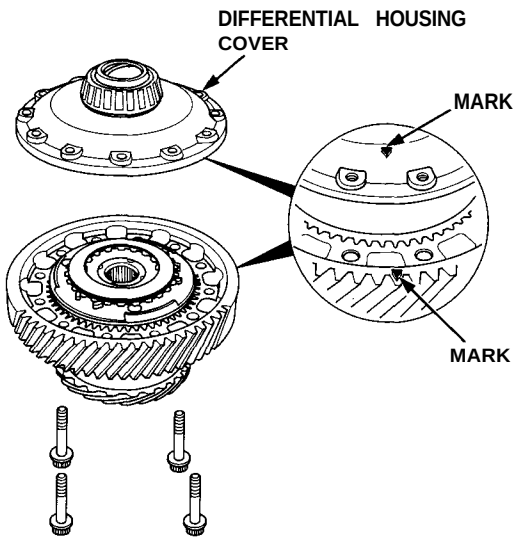

16. Tighten the mounting bolts in a crisscross pattern in several steps.

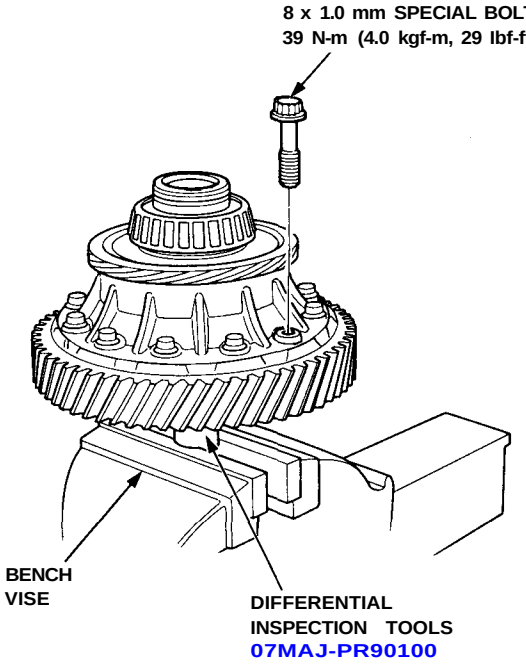

17. Measure the preset torque (see page 15-4).

Standard: 59-137 N-m (6-14 kgf-m, 43-101 lbf-ft)

112 mm SHIM

◯ Standard shim

	Part Number	Thickness
A	41261—PR8—000	1.2 mm (0.0472 in)
B	41262—PR8—000	1.4 mm (0.0551 in)
C	41263—PR8—000	1.6 mm (0.0630 in)
D	41264—PR8—000	1.8 mm (0.0709 in)
E	41265—PR8—000	2.0 mm (0.0787 in)
F	41266—PR8—000	2.2 mm (0.0866 in)
Ⓖ	41267—PR8—000	2.4 mm (0.0945 in)
H	41268—PR8—000	2.6 mm (0.1024 in)
I	41269—PR8—000	2.8 mm (0.1102 in)
J	41270—PR8—000	3.0 mm (0.1181 in)

- If the preset torque is more than the standard, select a thinner 112 mm shim, and recheck the preset torque.
- If the preset torque is less than the standard, select a thicker 112 mm shim, and recheck the preset torque.

Oil Seal

Removal

1. Remove the differential assembly.
2. Remove the oil seal from the transmission housing.

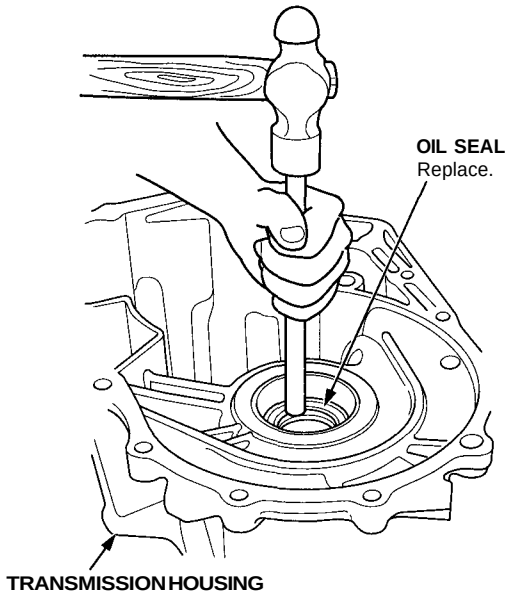

3. Remove the oil seal from the clutch housing.

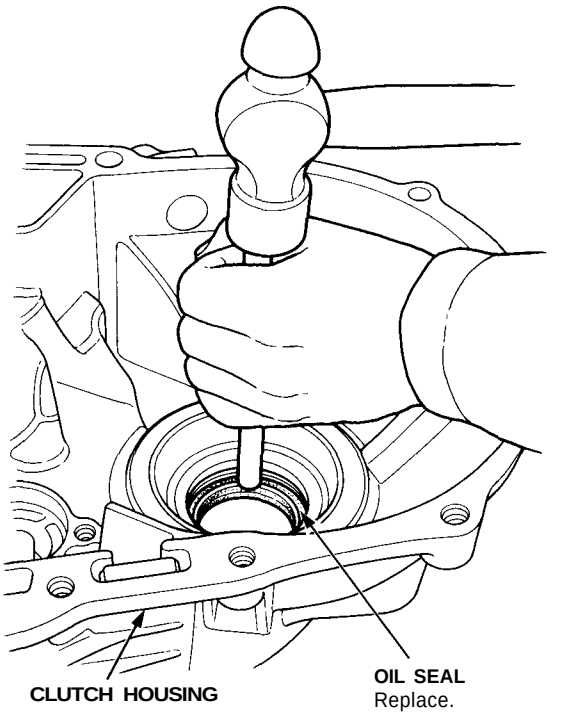

Bearing Outer Race

Replacement (Clutch Housing Side)

NOTE:

- The outer race and bearing should be replaced as a set.
- Inspect and adjust the bearing preload whenever the bearing is replaced.

1. Remove the bearing outer race, 90 mm washer, and oil guide ring using the special tools.

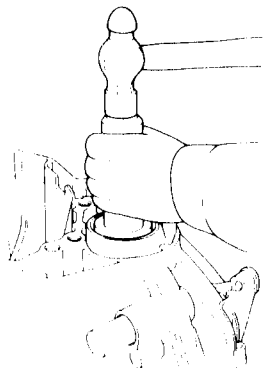

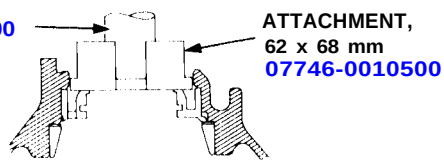

2. Install the oil guide ring and 90 mm washer, then drive the outer race into the clutch housing using the special tools.

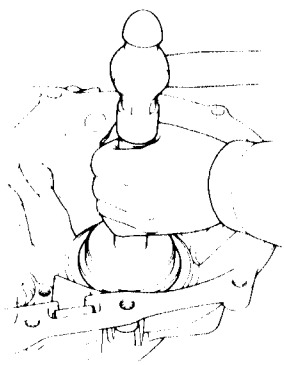

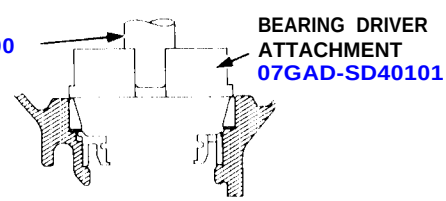

Bearing Preload

Adjustment

If any of the items listed below are replaced, the bearing preload must be adjusted.

- TRANSMISSION HOUSING
- CLUTCH HOUSING
- DIFFERENTIAL
- TAPERED ROLLER BEARING and OUTER RACE
- 75 mm THRUST SHIM
- 90 mm WASHER
- OIL GUIDE RING

1. Remove the bearing outer race and 75 mm thrust shim from the transmission housing by prying up on the bearing outer race or by heating the housing to about 212°F (100°C).

   CAUTION: Do not reuse the thrust shim if the outer race was pried out.

   NOTE:
   - If the outer race was removed by heating the case, let the transmission cool to room temperature before adjusting the bearing preload.
   - Do not heat the transmission housing in excess of 212°F (100°C).
   - Replace the bearing with a new one whenever the outer race is replaced.
   - Repeat on the clutch side.

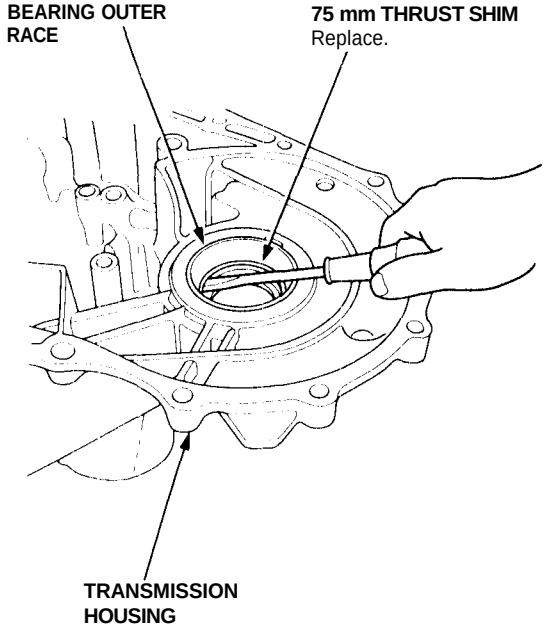

2. Install the standard shim and bearing outer race into the transmission housing using the special tools. Install the bearing outer race squarely, and check that there is no clearance between the bearing outer race, shim and transmission housing.

CAUTION: Do not use more than one shim to adjust the bearing preload.

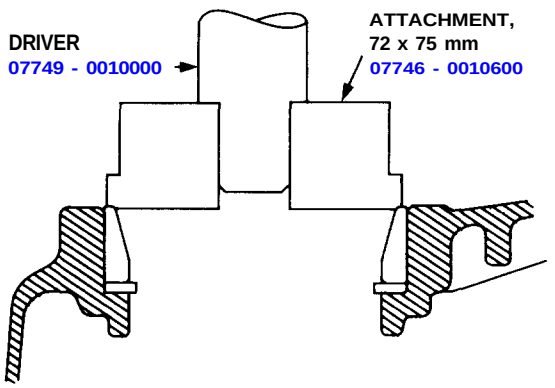

75 mm THRUST SHIM:

○ Standard shim

	Part Number	Thickness
A	41481 – PR8 – 000	1.70 mm (0.0669 in)
B	41482 – PR8 – 000	1.73 mm (0.0681 in)
C	41483 – PR8 – 000	1.76 mm (0.0693 in)
D	41484 – PR8 – 000	1.79 mm (0.0705 in)
E	41485 – PR8 – 000	1.82 mm (0.0723 in)
F	41486 – PR8 – 000	1.85 mm (0.0728 in)
G	41487 – PR8 – 000	1.88 mm (0.0740 in)
H	41488 – PR8 – 000	1.91 mm (0.0752 in)
I	41489 – PR8 – 000	1.94 mm (0.0764 in)
Ⓙ	41490 – PR8 – 000	1.97 mm (0.0776 in)
K	41491 – PR8 – 000	2.00 mm (0.0787 in)
L	41492 – PR8 – 000	2.03 mm (0.0799 in)
M	41493 – PR8 – 000	2.06 mm (0.0811 in)
N	41494 – PR8 – 000	2.09 mm (0.0823 in)
O	41495 – PR8 – 000	2.12 mm (0.0835 in)
P	41496 – PR8 – 000	2.15 mm (0.0846 in)
Q	41497 – PR8 – 000	2.18 mm (0.0858 in)
R	41498 – PR8 – 000	2.21 mm (0.0870 in)
S	41499 – PR8 – 000	2.24 mm (0.0882 in)
T	41500 – PR8 – 000	2.27 mm (0.0894 in)

3. Lubricate the tapered roller bearing with transmission oil, then install the differential.

4. Install the transmission housing. Do not install the mainshaft, countershaft, and reverse idle gear shaft.

Torque: 44 N-m (4.5 kgf-m, 33 lbf-ft)

5. Rotate the differential assembly in both directions to seat the bearings.

6. Measure the starting torque of the differential assembly with a special tool and a torque wrench. Measure the bearing preload at normal room temperature in both directions.

Standard: 2.0 - 3.0 N-m (20 - 30 kgf-cm, 17 - 26 lbf-in)

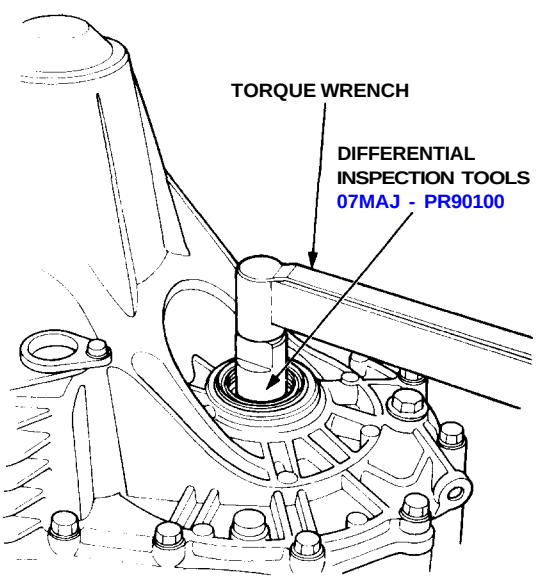

7. If the bearing preload is not within the standard, select the shim that will give you the correct preload, and recheck.
Changing one of the shims to the next size will increase or decrease preload about 0.3 - 0.4 N-m (3 - 4 kgf-cm, 2.60 - 3.47 lbf-in).

Oil Seal

Installation

1. Install the oil seal into the transmission housing using the special tools.

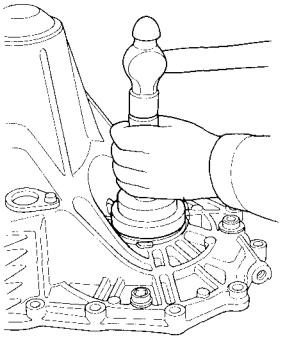

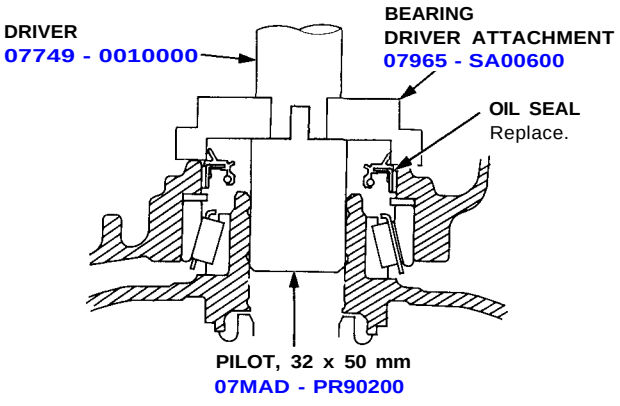

2. Install the oil seal into the clutch housing using the special tools.

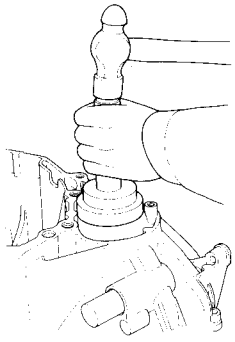

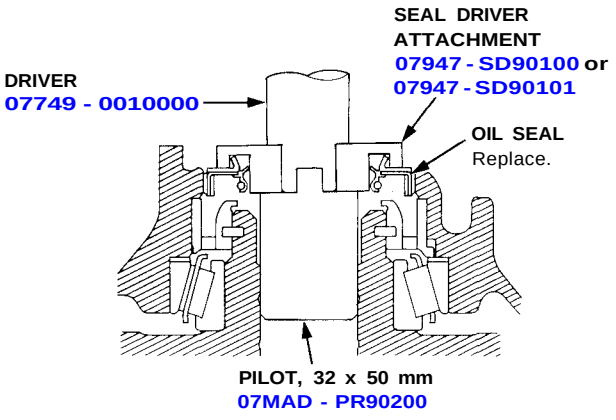

Special Tools

Ref. No.	Tool Number	Description	Qty	Page Reference
①	07GAD—SD40101	Bearing Driver Attachment	1	15-26
②	07GAE—PG40200	Clutch Spring Compressor Bolt Assembly	1	15-20, 15-24
③	07HAE—PL50100	Clutch Spring Compressor Attachment	1	15-20, 15-24
④	07LAE—PX40100	Clutch Spring Compressor Attachment	1	15-20, 15-24
⑤	07MAD—PR90100	Attachment, 45 x 55 mm I.D.	1	15-19
⑥	07MAD—PR90200	Pilot, 32 x 50 mm	1	15-28
⑦	07MAJ—PR90100	Differential Inspection Tools	1	15-18, 20, 25, 28
⑧	07746—0010500	Attachment, 62 x 68 mm	1	15-26
⑨	07746—0010600	Attachment, 72 x 75 mm	1	15-27
⑩	07749—0010000	Driver	1	15-26, 15-27, 28
⑪	07947—SD90100 or 07947—SD90101	Seal Driver Attachment	1	15-28
⑫	07965—SA00600	Bearing Driver Attachment	1	15-28

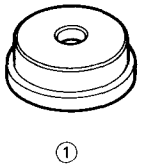
①

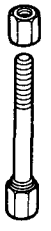
②

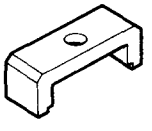
③

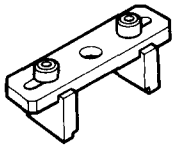
④

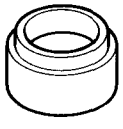
⑤

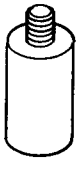
⑥

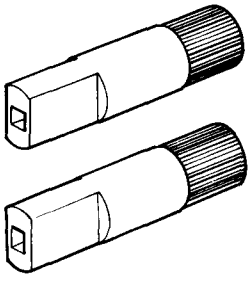
⑦

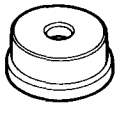
⑧

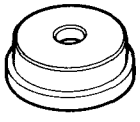
⑨

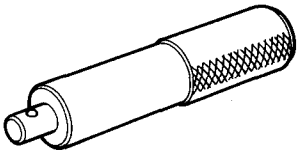
⑩


⑪

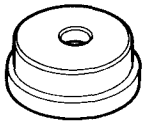
⑫

Differential

Illustrated Index

NOTE: If the parts marked with an asterisk (*) are replaced, the bearing preload must be adjusted (see page 15-26).

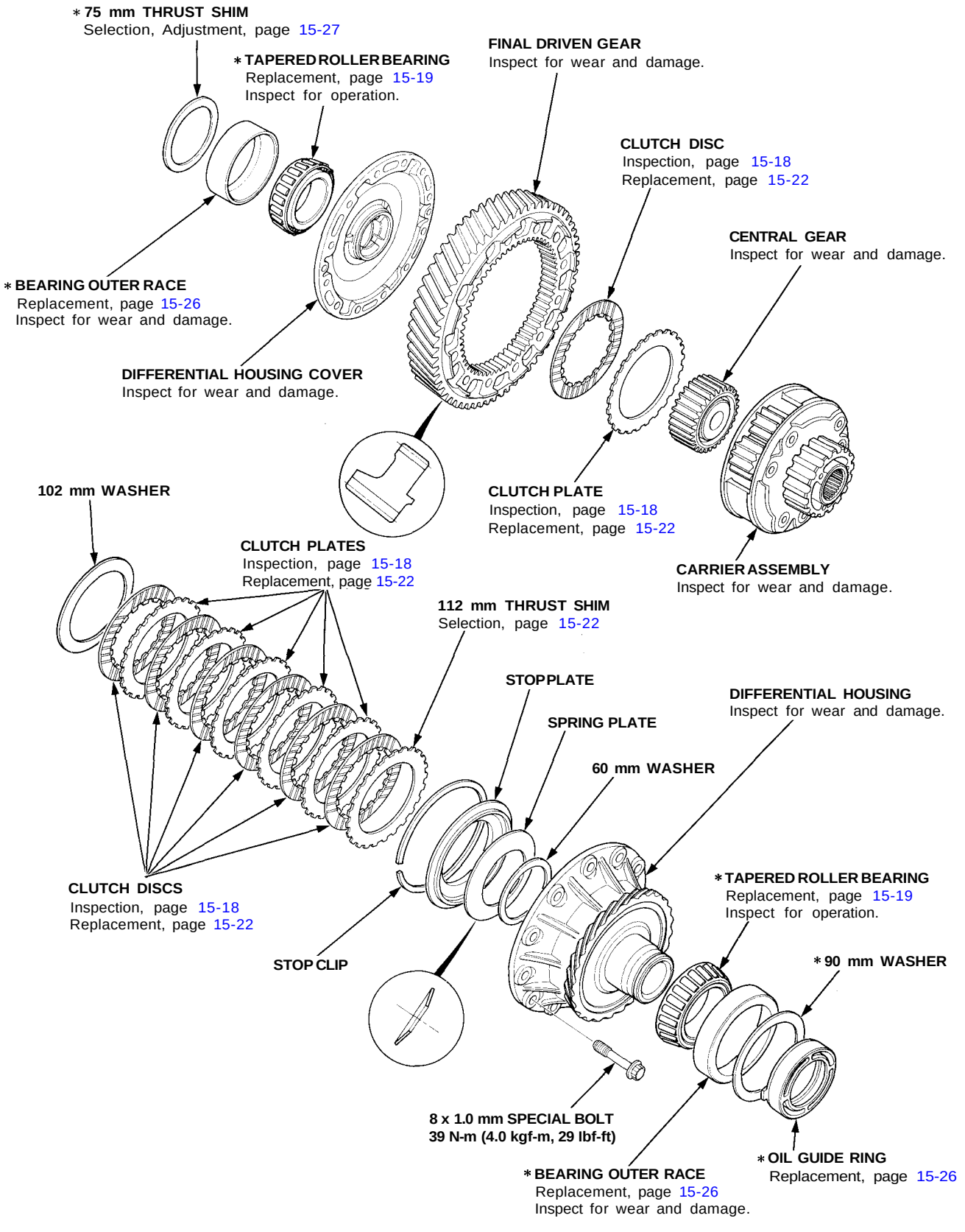

Preset Torque

Inspection

On-Vehicle:

1. Lift up right rear wheel, and place the safety stand. (Lift and Support Points, see section 1).
2. Block the other three wheels.
3. Measure preset torque clockwise using a torque wrench as shown.

   Standard: 59 - 137 N-m
   (6 - 14 kgf-m, 43 - 101 lbf-ft)
   Service Limit: 29 N-m (3 kgf-m, 22 lbf-ft)

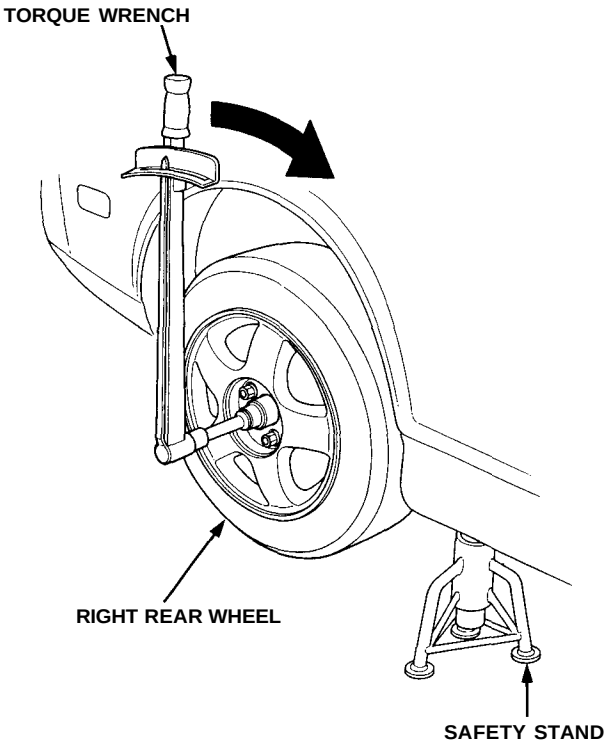

4. If preset torque is less than the service limit, replace the clutch discs with new ones. Adjust the thrust shim whenever the clutch discs are replaced (see page 15-22).

Assembly:

1. Place one special tool in a vise. Place the left side of the differential assembly on the special tool, then preset the differential with 3—5 rotations, both clockwise and counterclockwise.

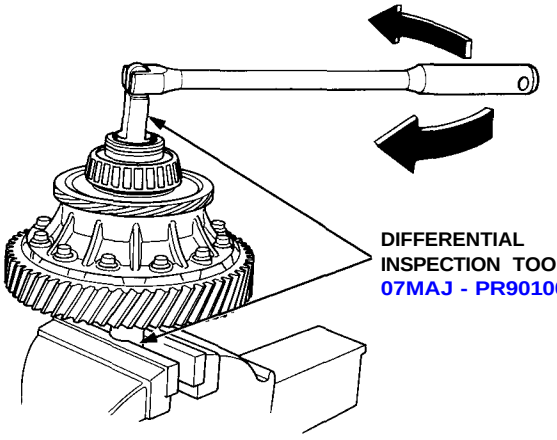

2. Measure preset torque clockwise using a torque wrench as shown.

   Standard: 59 - 137 N-m
   (6 - 14 kgf-m, 43-101 lbf-ft)
   Service Limit: 29 N-m (3 kgf-m, 22 lbf-ft)

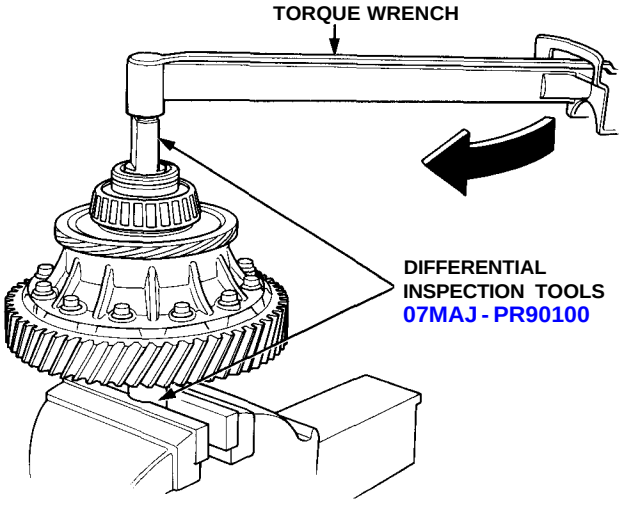

3. If preset torque is less than the service limit, replace the clutch discs with new ones. Adjust the thrust shim whenever the clutch discs are replaced (see page 15-22).

Replacement

NOTE:
- The bearing and outer race should be replaced as a set.
- Inspect and adjust the bearing preload whenever the bearing is replaced.

1. Remove the tapered roller bearings using the bearing pullers.

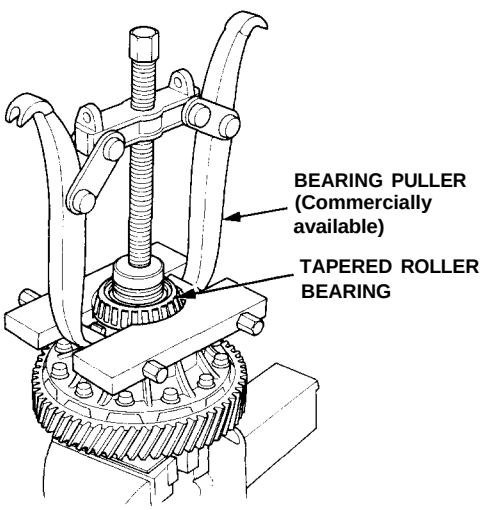

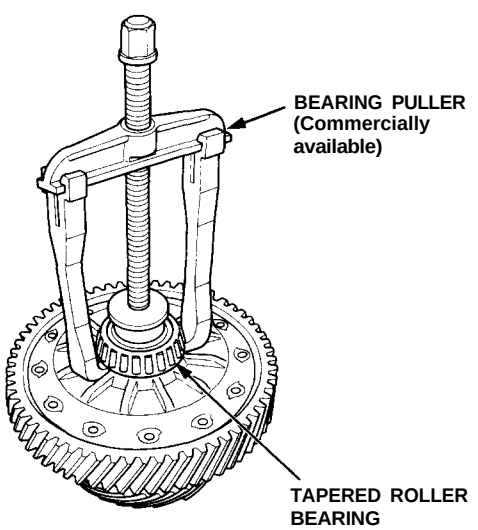

2. Install the tapered roller bearings using a special tool and a press as shown. Press the tapered roller bearings squarely until they bottom against the case.

Transmission Housing Side:

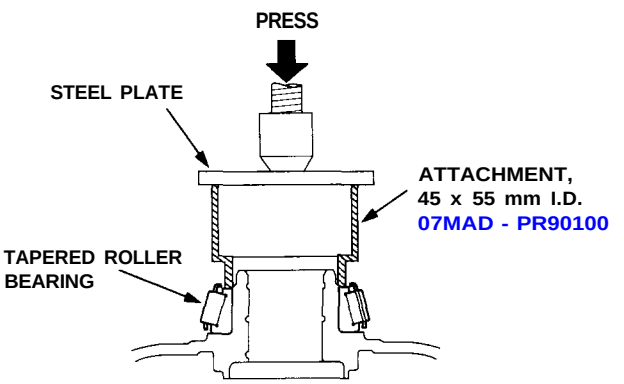

Clutch Housing Side:

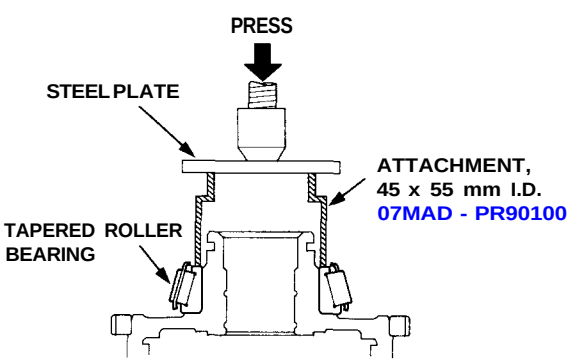

Disassembly

1. Hold the differential in a bench vise using a special tool, then remove the differential housing mounting bolts in a crisscross pattern in several steps.

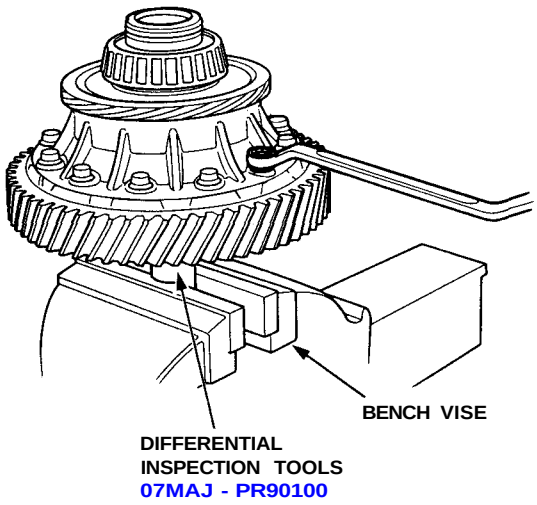

2. Remove the differential housing, then install the special tools on the stop plate.

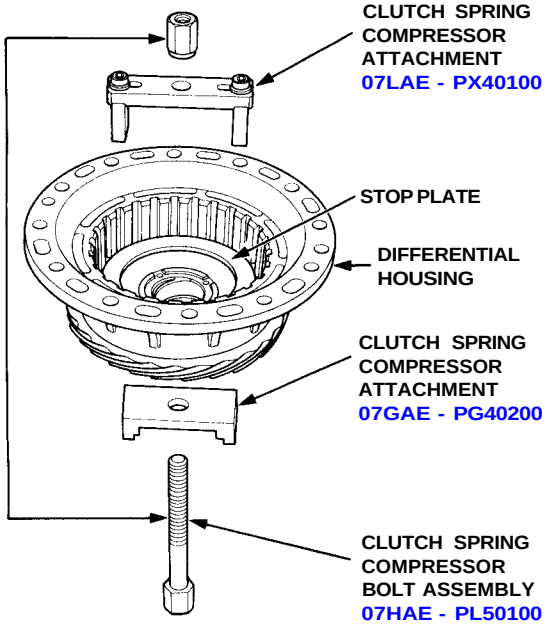

3. Compress the spring plate.

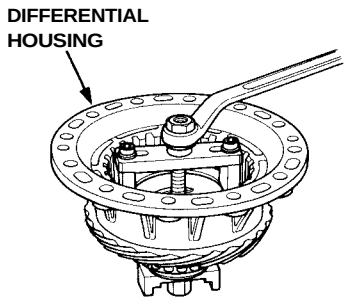

4. Remove the stop clip.

5. Remove the special tools, and then remove the stop plate, spring plate, and 60 mm washer.

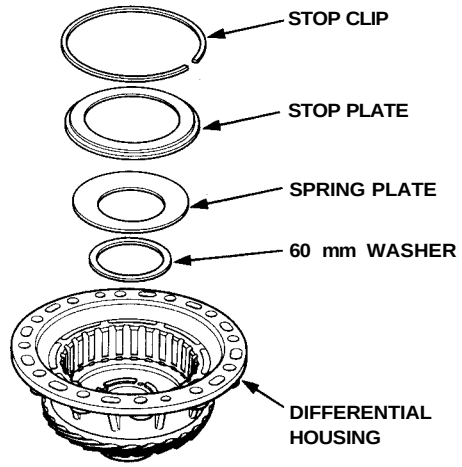

6. Remove the 112 mm thrust shim, clutch discs, clutch plates, and 102 mm washer.

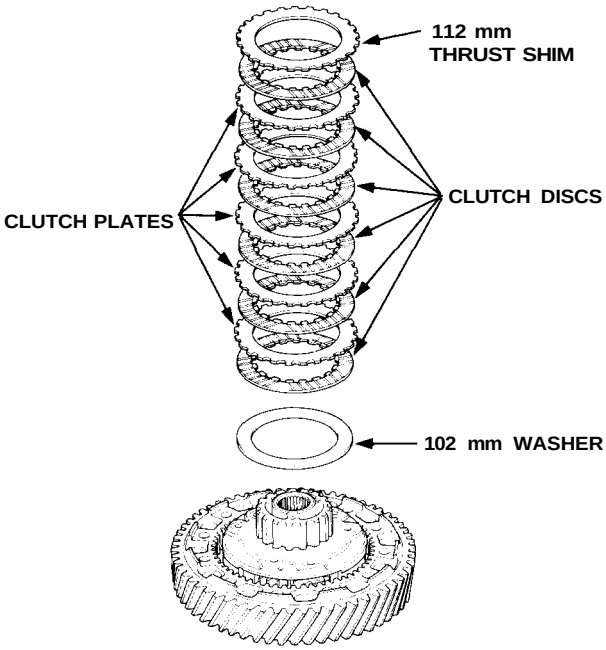

7. Remove the carrier assembly, central gear, clutch plate, and clutch disc.

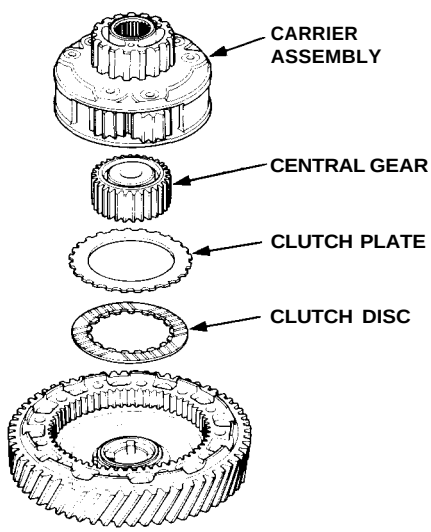

8. Screw two 8 x 1.0 mm bolts into the threaded holes in the differential housing cover to push it away from the final driven gear. Turn each bolt two turns at a time to prevent cocking the differential housing coverexcessively.

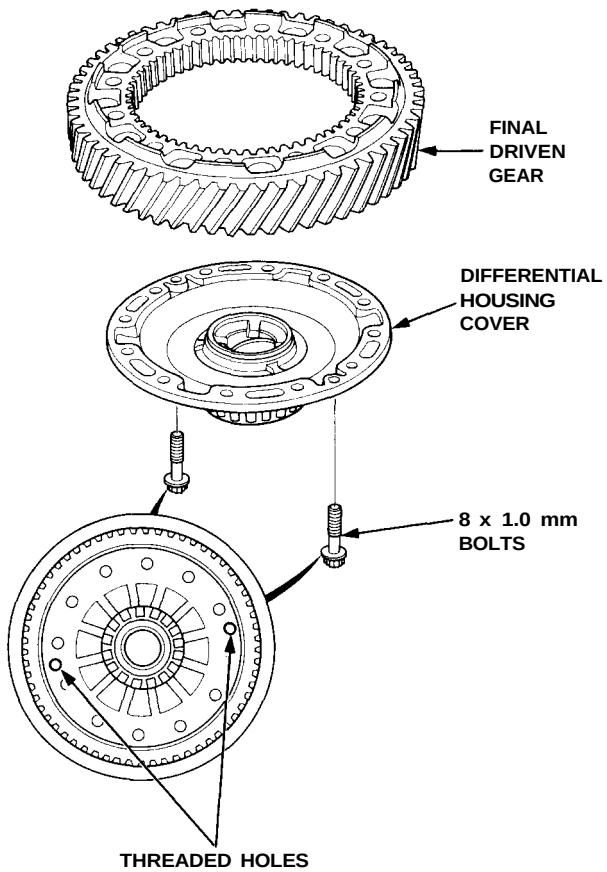

Clutch Disc, Clutch Plate

Replacement

NOTE: The clutch discs and clutch plates should be replaced as a set.

1. Remove the clutch discs and clutch plates (see page 15-20).
2. Soak the clutch discs for five minutes in transmission oil.
3. Install the clutch discs, clutch plates, and a standard shim.

   NOTE: Position the 11 2 mm thrust shim with the thickness size mark facing away from the clutch discs.

112 mm THRUST SHIM

◯ Standard shim

	Part Number	Thickness
A	41261-PR8-000	1.2 mm (0.0472 in)
B	41262-PR8-000	1.4 mm (0.0551 in)
C	41263-PR8-000	1.6 mm (0.0630 in)
D	41264-PR8-000	1.8 mm (0.0709 in)
E	41265-PR8-000	2.0 mm (0.0787 in)
F	41266-PR8-000	2.2 mm (0.0866 in)
G	41267-PR8-000	2.4 mm (0.0945 in)
Ⓗ	41268-PR8-000	2.6 mm (0.1024 in)
I	41269-PR8-000	2.8 mm (0.1102 in)
J	41270-PR8-000	3.0 mm (0.1181 in)

<Reference>
Measure Ⓐ: 41.7—41.9 mm (1.642—1.650 in)

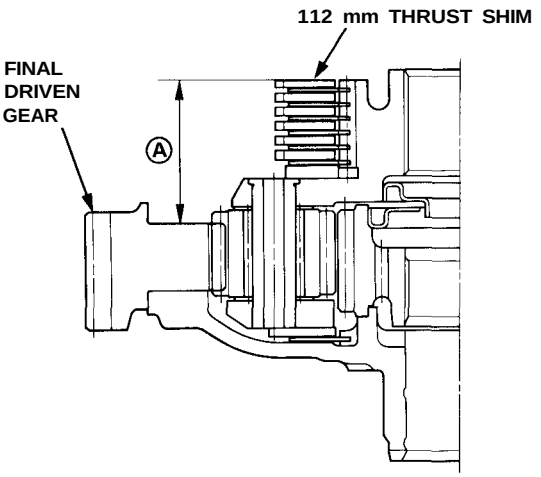

4. Install the differential housing. Tighten the bolts evenly in several steps, then torque them in a criss-cross pattern.

   Torque: 39 N-m (4.0 kgf-m, 29 lbf-ft)

5. Make sure the preset torque is within the standard (see page 15-18).
6. If preset torque is beyond the standard, replace the 112 mm thrust shim as necessary.

Reassembly

1. Install the clutch disc, clutch plate, central gear, and carrier assembly. Lubricate the clutch disc surface with transmission fluid.

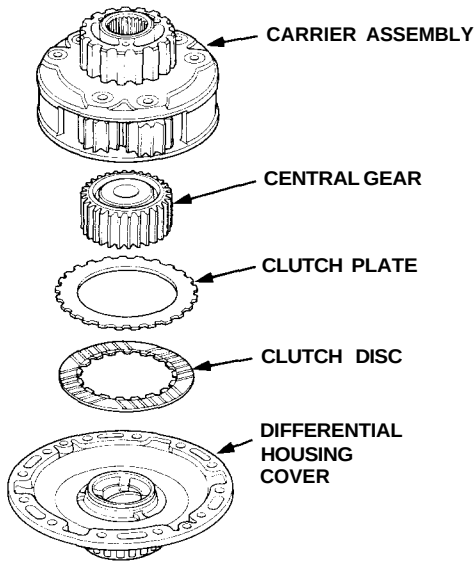

2. Install the final driven gear. Align the mark on the differential housing cover with the mark on the final driven gear.

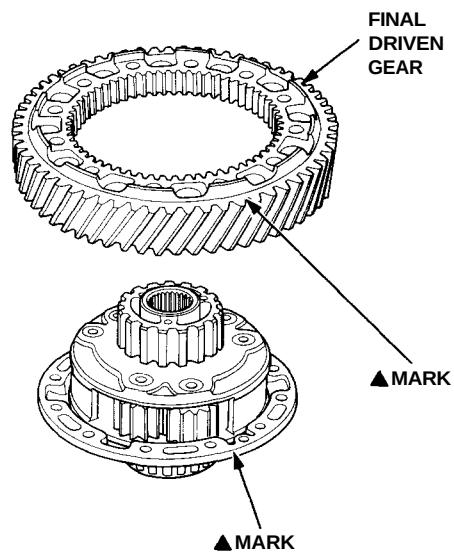

3. Install the 102 mm washer, clutch discs, clutch plates, and 112 mm thrust shim. Lubricate the clutch discs with transmission fluid. Position the 112 mm thrust shim with the thickness size mark facing away from the clutch discs.

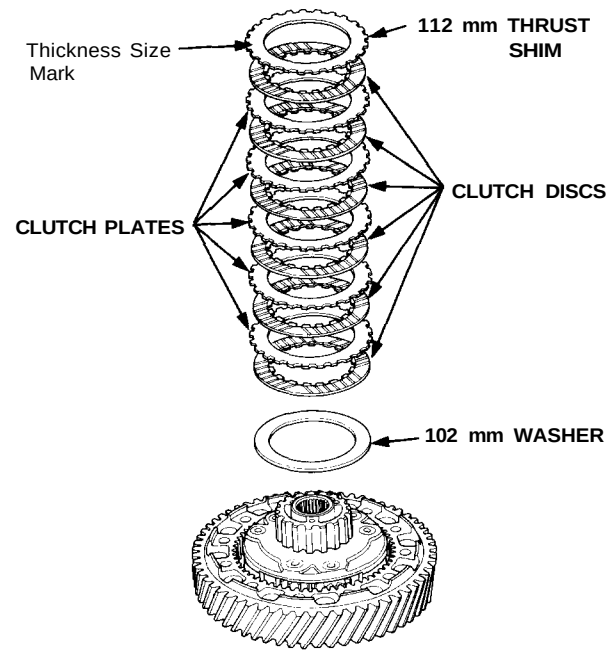

4. Install the 60 mm washer, spring plate, and stop plate.

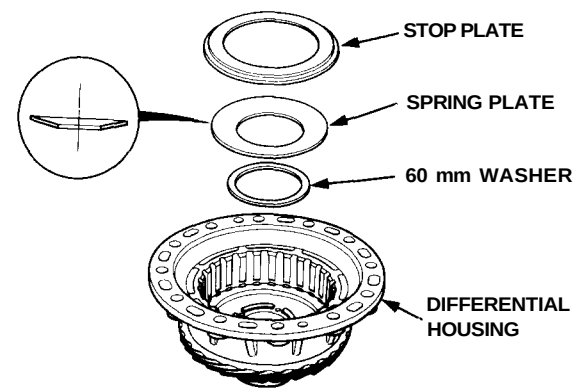

(cont'd)

Reassembly (cont'd)

5. Install the special tools on the stop plate.

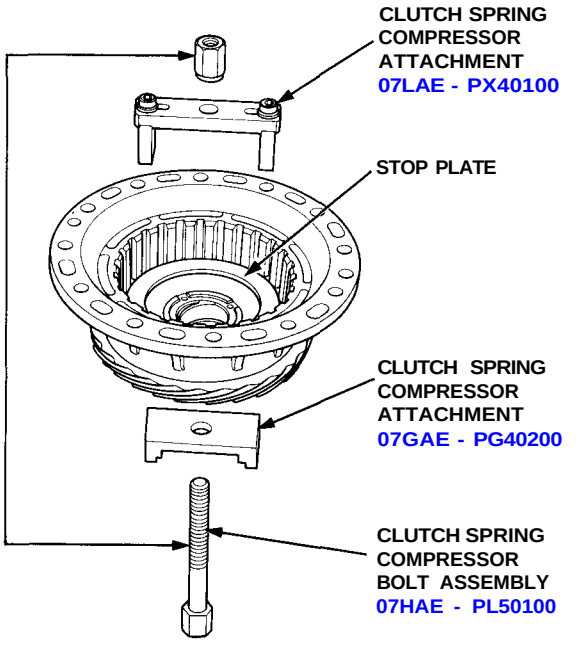

6. Compress the spring plate, then install the stop clip.

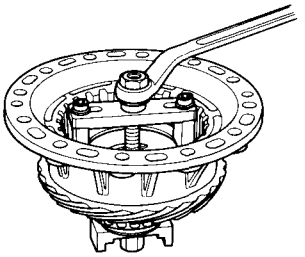

7. Install the differential housing. Align the fingers of the clutch plates and clutch discs.

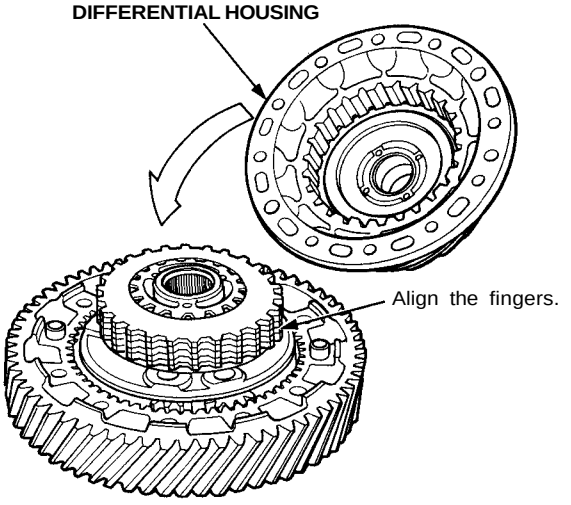

8. Make sure the differential housing touches the final driven gear.

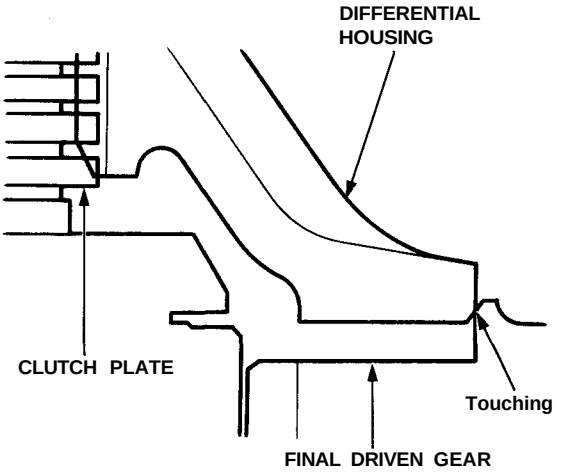

9. Hold the differential in a bench vise using a special tool, then install the differential housing mounting bolts. Tighten the bolts in a crisscross pattern in several steps.

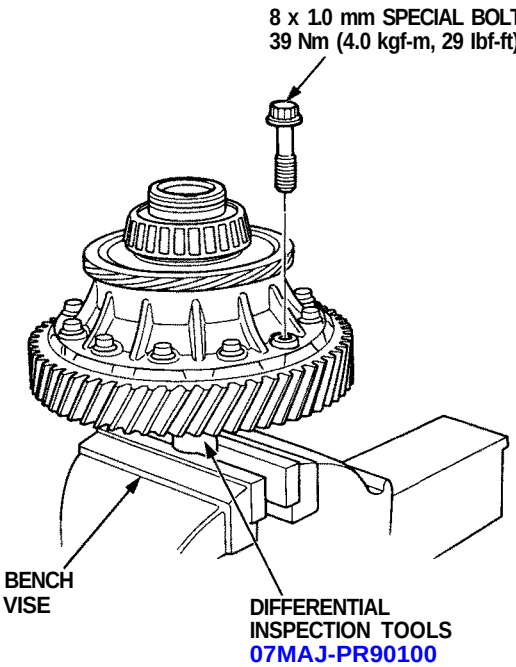

Oil Seal

Removal

1. Remove the differential assembly.
2. Remove the oil seal from the transmission housing.

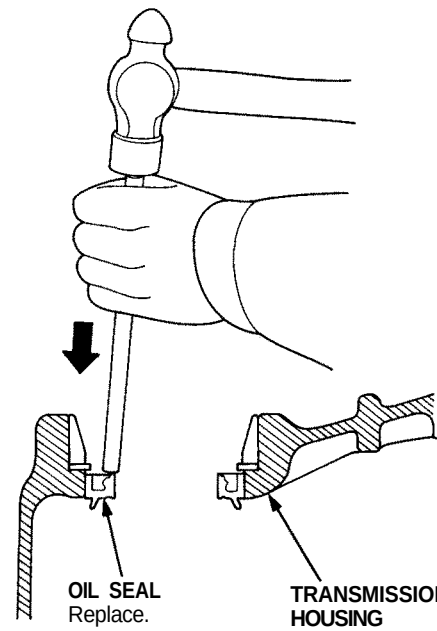

3. Remove the oil seal from the torque converter housing.

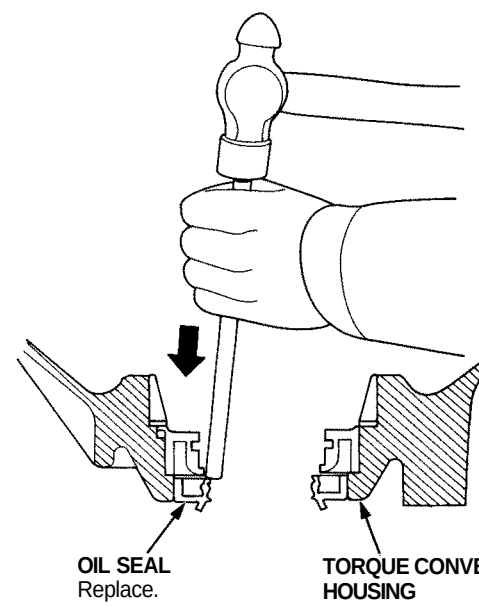

Bearing Outer Race

Replacement (Torque Converter Housing Side)

NOTE:

- The outer race and bearing should be replaced as a set.
- Inspect and adjust the bearing preload whenever the bearing is replaced.

1. Remove the bearing outer race, 90 mm washer, and oil guide ring using the special tools.

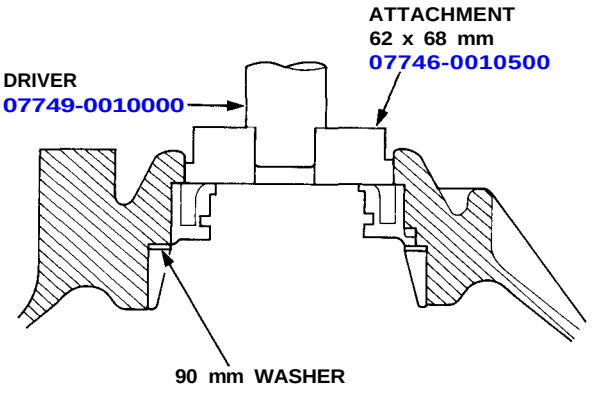

2. Install the oil guide ring and 90 mm washer, then drive the outer race into the torque converter housing using the special tools.

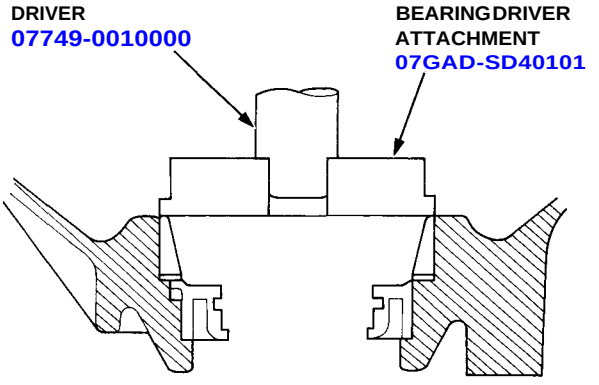

Bearing Preload

Adjustment

NOTE: If any of the items listed below are replaced, the bearing preload must be adjusted.

- TRANSMISSION HOUSING
- TORQUE CONVERTER HOUSING
- DIFFERENTIAL
- TAPERED ROLLER BEARING and OUTER RACE
- 75 mm THRUST SHIM
- 90 mm WASHER
- OIL GUIDE RING

1. Remove the bearing outer race and 75 mm thrust shim from the transmission housing by prying up on the bearing outer race or by heating the housing to about 212°F (100°C).

   CAUTION: Do not reuse the thrust shim if the outer race was pried out.

   NOTE:
   - If the outer race was removed by heating the case, let the transmission cool to room temperature before adjusting the bearing preload.
   - Do not heat the transmission housing in excess of 212°F (100°C).
   - Replace the bearing with a new one whenever the outer race is replaced.
   - Repeat on the torque converter side.

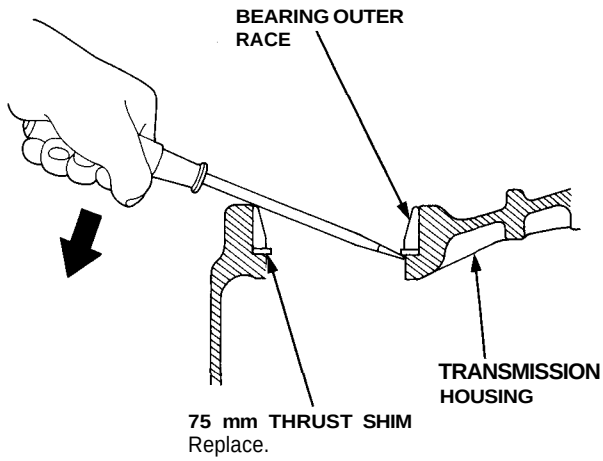

2. Install the standard shim and bearing outer race into the transmission housing using the special tools as shown. Install the bearing outer race squarely.
Check that there is no clearance between the bearing outer race, shim, and transmission housing.

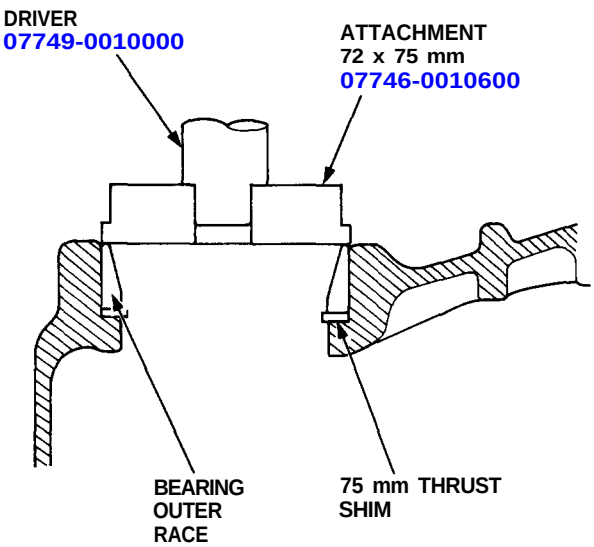

75 mm THRUST SHIM:

◯ Standard shim

	Part Number	Thickness
A	41481-PR8-000	1.70 mm (0.0669 in)
B	41482-PR8-000	1.73 mm (0.0681 in)
C	41483-PR8-000	1.76 mm (0.0693 in)
D	41484-PR8-000	1.79 mm (0.0705 in)
E	41485-PR8-000	1.82 mm (0.0723 in)
F	41486-PR8-000	1.85 mm (0.0728 in)
G	41487-PR8-000	1.88 mm (0.0740 in)
H	41488-PR8-000	1.91 mm (0.0752 in)
I	41489-PR8-000	1.94 mm (0.0764 in)
Ⓙ	41490-PR8-000	1.97 mm (0.0776 in)
K	41491-PR8-000	2.00 mm (0.0787 in)
L	41492-PR8-000	2.03 mm (0.0799 in)
M	41493-PR8-000	2.06 mm (0.0811 in)
N	41494-PR8-000	2.09 mm (0.0823 in)
O	41495-PR8-000	2.12 mm (0.0835 in)
P	41496-PR8-000	2.15 mm (0.0846 in)
Q	41497-PR8-000	2.18 mm (0.0858 in)
R	41498-PR8-000	2.21 mm (0.0870 in)
S	41499-PR8-000	2.24 mm (0.0882 in)
T	41500-PR8-000	2.27 mm (0.0894 in)
U	41501-PR9-000	2.30 mm (0.0906 in)
V	41502-PR9-000	2.33 mm (0.0917 in)
W	41503-PR9-000	2.36 mm (0.0929 in)
X	41504-PR9-000	2.39 mm (0.0941 in)
Y	41505-PR9-000	2.42 mm (0.0953 in)

3. Lubricate the tapered roller bearing with transmission fluid, then install the differential.

4. Install the transmission housing. Do not install the mainshaft, countershaft, reverse idle gear shaft, and secondary shaft.

Torque: 54 N-m (5.5 kgf-m, 40 lbf-ft)

5. Rotate the differential assembly in both directions to seat the bearings.

(cont'd)

Bearing Preload

Adjustment (cont'd)

6. Measure the starting torque of the differential assembly with a special tool and a torque wrench. Measure the bearing preload at normal room temperature in both directions.

Standard: 3.3 - 4.5 N-m (33 - 45 kgf-cm, 29 - 39 lbf-in)

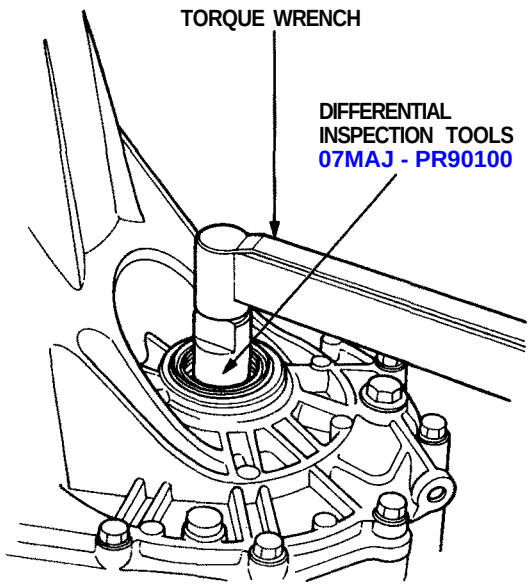

7. If the bearing preload is not within the standard, select the shim that will give you the correct preload, and recheck.
Changing one of the shims to the next size will increase or decrease preload about 0.3 - 0.4 N-m (3 - 4 kgf-cm, 2.60 - 3.47 lbf-in)

Oil Seal

Installation

1. Install the oil seal into the transmission housing using the special tools.

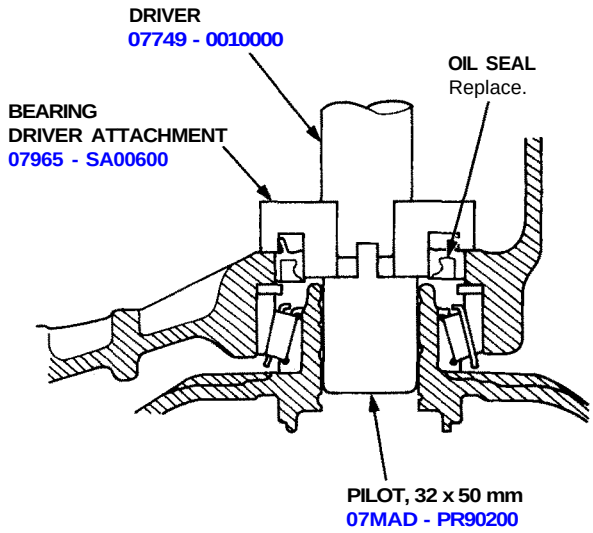

2. Install the oil seal into the torque converter housing using the special tools.

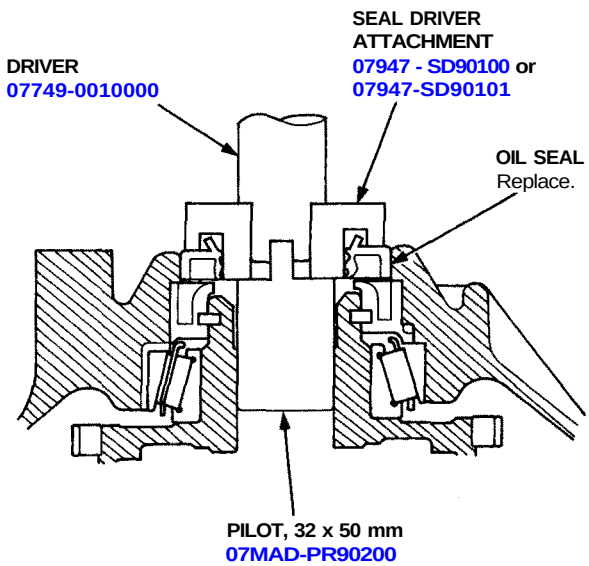

Driveshafts

Special Tools 16–2
Driveshafts
- **Removal** 16–3
- **Disassembly** 16–6
- **Inspection** 16–7
- **Reassembly** 16–8

Intermediate Shaft
- **Replacement** 16–12
- **Disassembly** 16–13
- **Index/Inspection** 16–15
- **Reassembly** 16–16

Special Tools

Number	Tool Number	Description	Qty	Page Reference
(1)	07GAF – SD40700	Hub Dis/Assembly Base	2	16-13, 16-14, 16, 17
(2)	07GAF – SE00200	Hub Assembly Guide Attachment	1	16-16
(3)	07GAD – PG40100	Oil Seal Driver	1	16-16
(4)	07JAD – SH3010A	Seal Driver Attachment	1	16-16
(5)	07LAD – PW50500	Pinion Cover Driver Attachment	1	16-17
(6)	07746 – 0010400	Attachment, 52 x 55 mm	1	16-14
(7)	07749 – 0010000	Driver	1	16-14, 16-16, 16-17

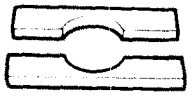

(1)

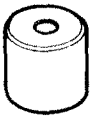

(2) (5)

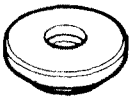

(3)

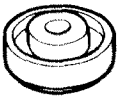

(4)



(6)



(7)

Removal

Inspection

Driveshaft Boot
Check the boots on the driveshaft for cracks, damage, leaking grease or loose boot bands.
If any damage is found, replace the boot.

Spline Looseness
Turn the driveshaft by hand, and make sure the splines and joints are not excessively loose.
If damage is found, replace the joints if necessary.

Twisted or Cracked
Make sure the driveshaft is not twisted or cracked.
Replace if necessary.

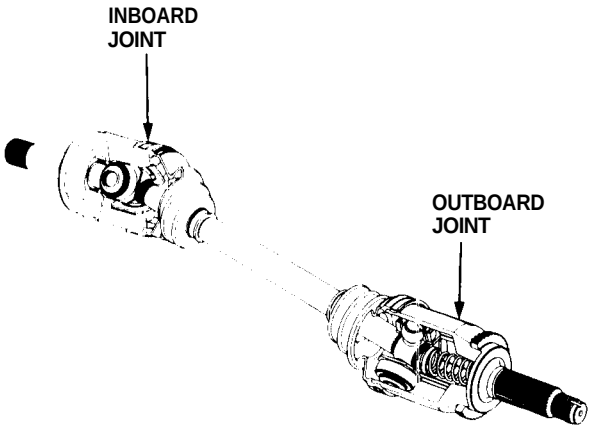

1. Raise the vehicle, and place safety stands in the proper locations (see section 1).
2. Remove the rear wheels.
3. Drain the transmission fluid (see section 13 M/T or section 14 A/T).

   NOTE: It is not necessary to drain the transmission fluid when the right driveshaft is removed.
4. Raise the locking tab on the spindle nut, then remove the nut.

   NOTE: Before installing the wheel, clean the mating surfaces of the brake disc and inside of the wheel.

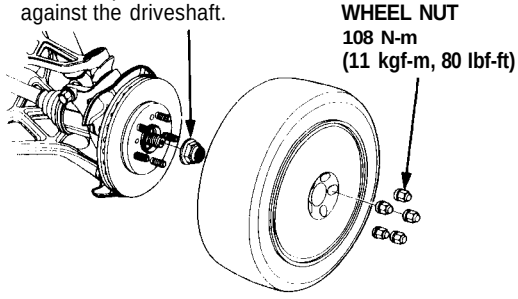

5. Remove the banjo bolt, and disconnect the brake hose, then remove the brake hose clamp from the knuckle.

   CAUTION: Avoid spilling brake fluid on painted, plastic or rubber surfaces as it can damage the finish; wash spilled brake fluid off immediately with clean water.

   NOTE: Cover the end of the brake hose with a clean rag to prevent contamination of the system. Then secure the hose to the suspension arm.

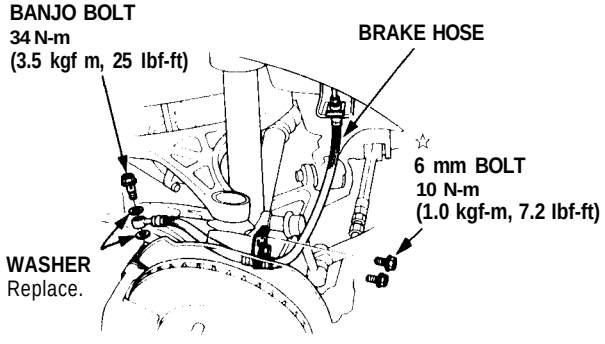

☆Corrosion resistant bolt

(cont'd)

Removal (cont'd)

6. Remove the wheel sensor from the knuckle and the rear of the lower arm, then secure the wheel sensor wire to the suspension arm.

NOTE:
- Do not disconnect the wheel sensor,
- Avoid twisting the wires when reinstalling the wheelsensor.

☆V Corrosion resistant bolt

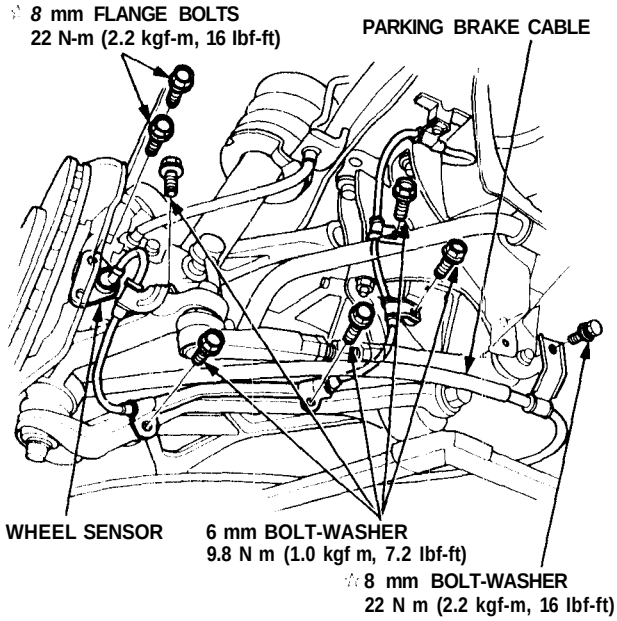

7. Disconnect the parking brake cable from the body.

8. Remove the flange bolt, then disconnect the toe control arm from the body.

☆ Corrosion resistant bolt

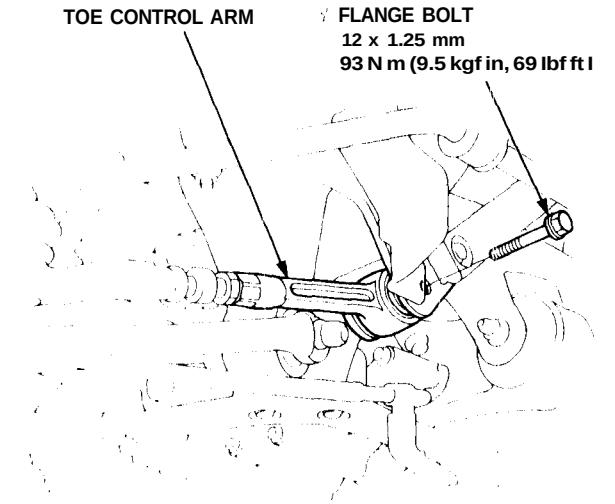

9. Hold the damper lower mount of stabilizer link with a wrench, and remove the damper mounting nut.

☆ Corrosion resistant nut

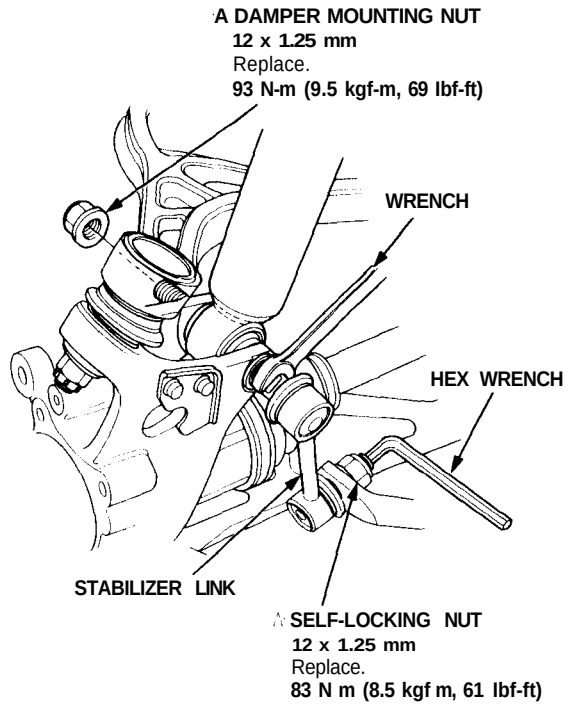

10. Hold the ball pin of the stabilizer link with a hex wrench, and loosen the self-locking nut.

11. Remove the self-locking nut, then remove the stabilizer link from the stabilizer bar and knuckle.

☆ Corrosion resistant nut

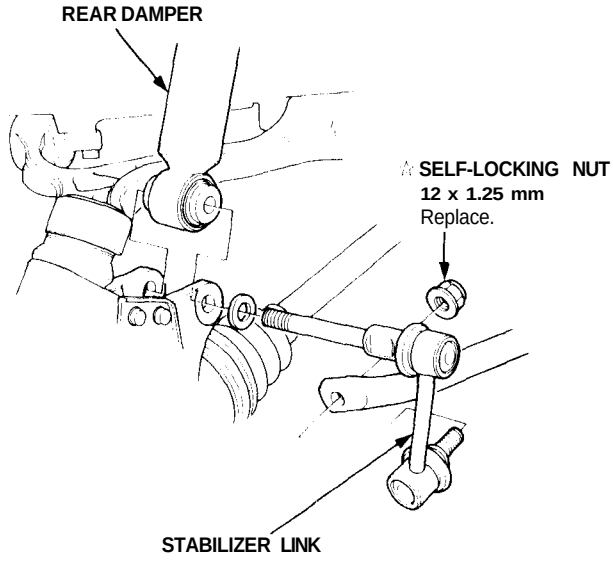

12. Remove the self-locking nut and flange bolt.

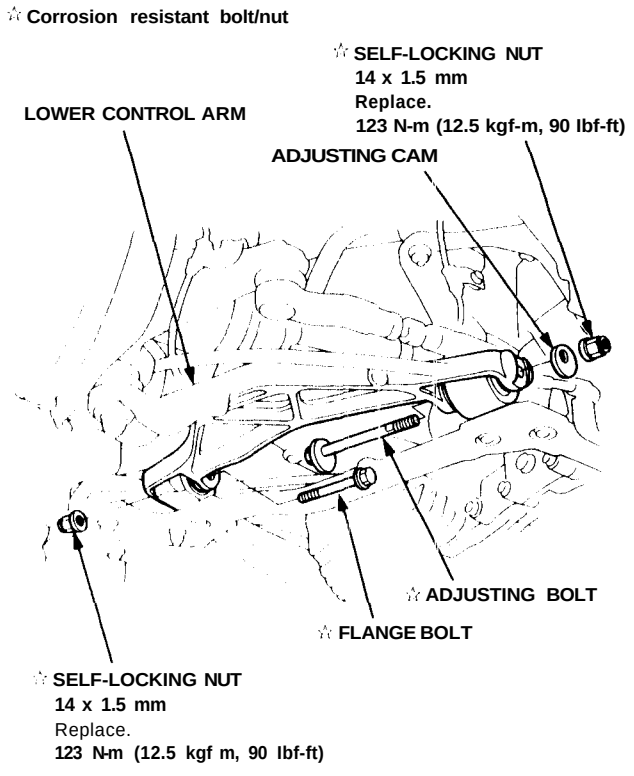

13. Remove the self locking nut and adjusting bolt, then disconnect the lower control arm from the sub-frame.

14. Pull the knuckle outward, and remove the driveshaft outboard joint from the knuckle using a plastic hammer.

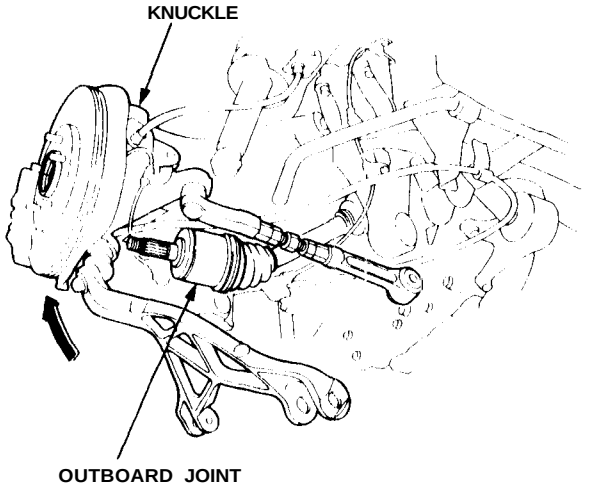

15. Pry the driveshaft assembly with a screwdriver as shown to force the set ring past the groove.

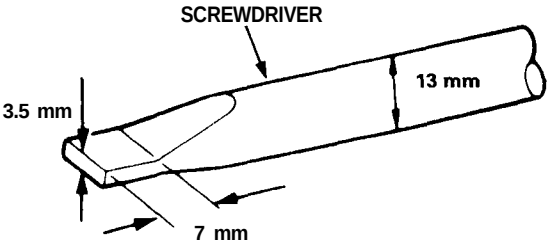

16. Pry the inboard joint outward, then remove the inboard joint from of the differential case or intermediate shaft as an assembly.

CAUTION:

- **Do not pull on the driveshaft, as the inboard joint may come apart.**
- **Use care when prying out the assembly, and pull it straight to avoid damaging the differential oil seal or the intermediate shaft dust seal.**

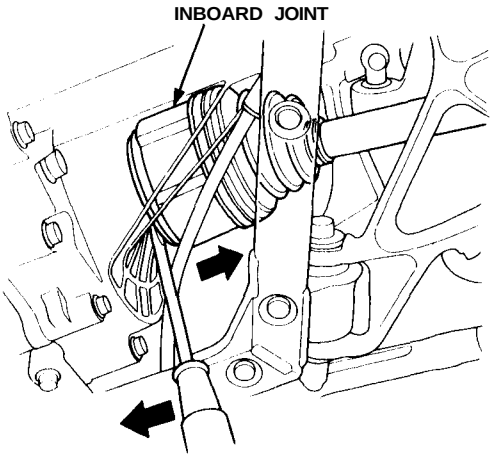

17. Installation is the reverse order of removal.
After installing the driveshafts, adjust the wheel alignment (see section 18).

Driveshafts

Disassembly

1. To remove the boot band, pry up the locking tabs with screwdriver, and raise the end of the band.

   NOTE: Carefully clamp the driveshaft in a vise with soft jaws.

   CAUTION: Take care not to damage the boots.

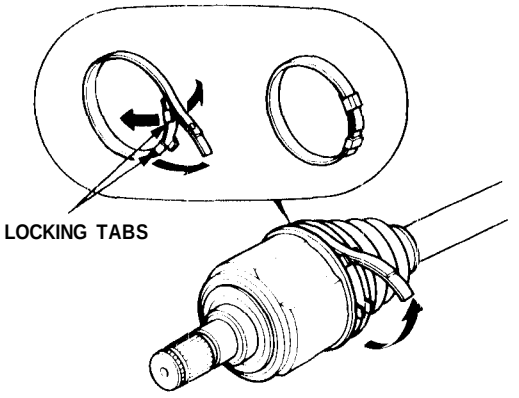

?. Mark each roller and joint to identify the locations of rollers and grooves in the joint.

   NOTE: Be careful not to drop the rollers when separating them from the inboard joint.

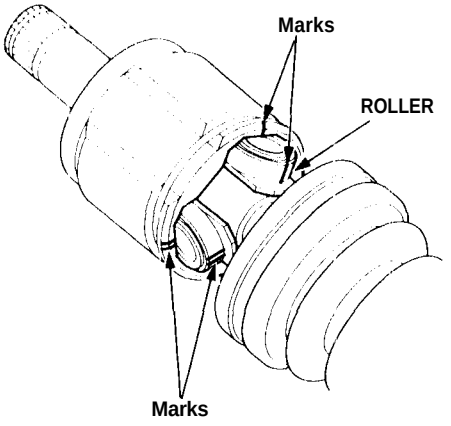

3. Remove both joints.

   Outboard joint side only: Remove the circlip from the outboard joint groove, then remove the outboard joint and spring.

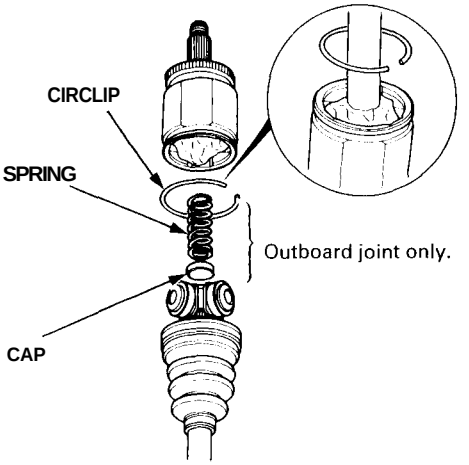

4. Mark the rollers and spider to identify the locations of rollers on the spider, then remove the rollers.

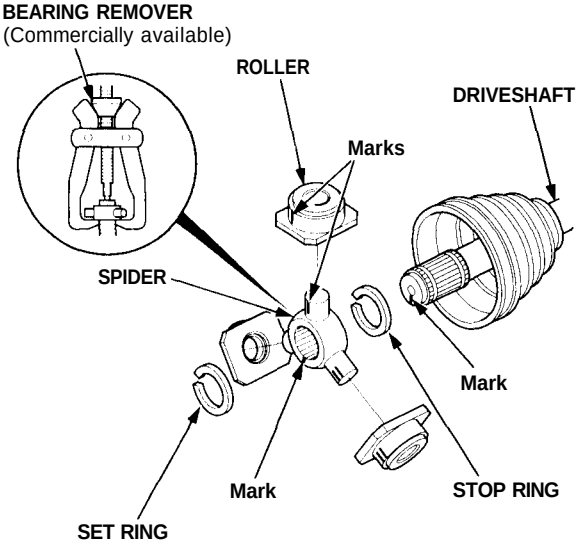

5. Mark the spider and driveshaft to identify the position of the spider on the shaft.

6. Remove the set ring.

7. Remove the spider using a bearing remover.

8. Remove the slop rings from the driveshaft.

Inspection

GREASE : Thoroughly pack the inboard joint and outboard joint with joint grease included in the new joint boot set.

Grease Quantity:

Inboard Joint	120–130 g (4.2–4.6 oz)
Outboard Joint	170–180 g (6.0–6.3 oz)

NOTE: Mark the rollers and roller grooves during disassembly to ensure proper positioning during reassembly.

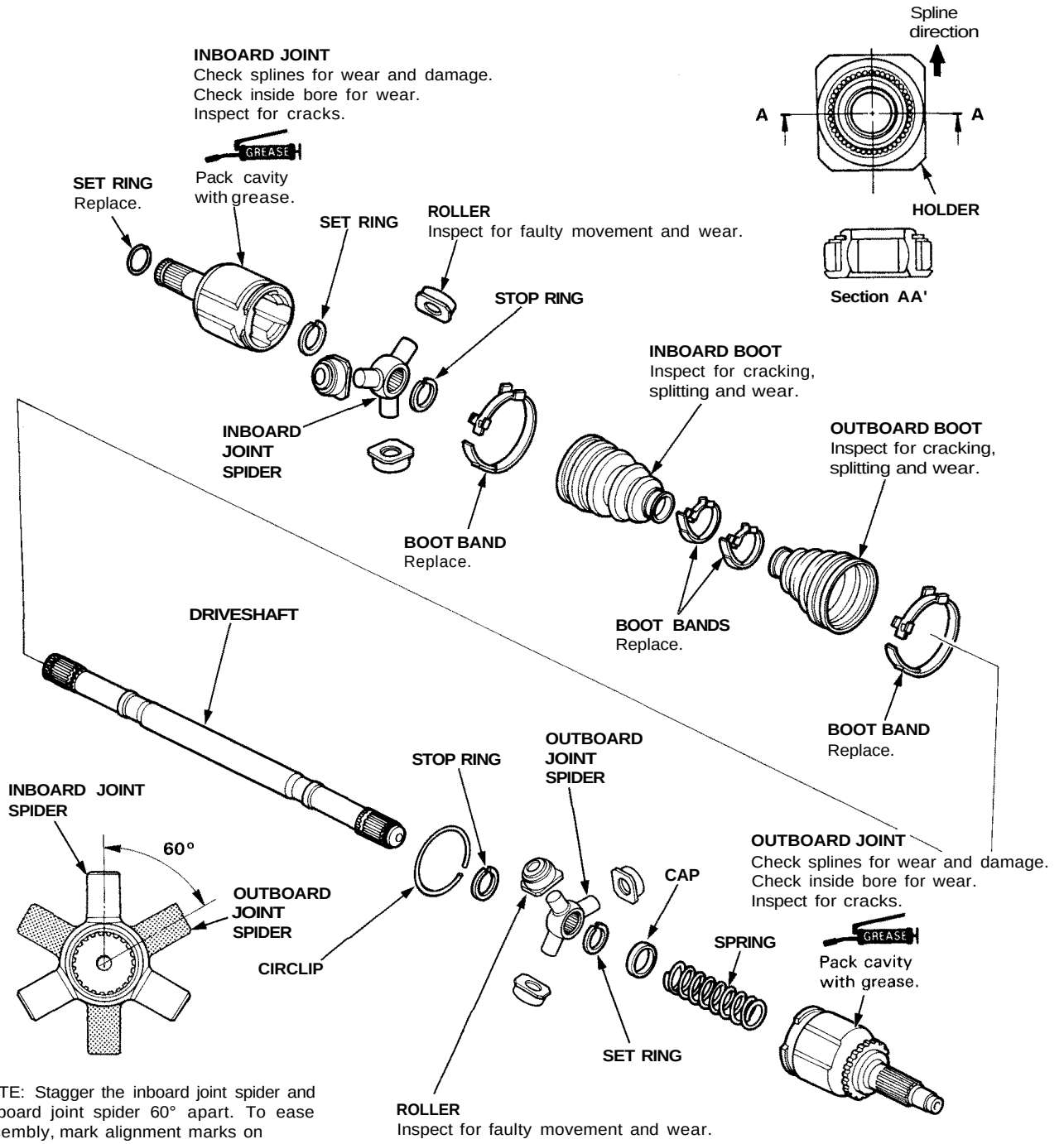

NOTE: Stagger the inboard joint spider and outboard joint spider 60° apart. To ease assembly, mark alignment marks on driveshaft and spiders before disassembling them.

Reassembly

Outboard joint side

NOTE: Wrap the splines with vinyl tape to prevent damage to the boot.

1. Install the outboard boot to the driveshaft, then remove the vinyl tape.

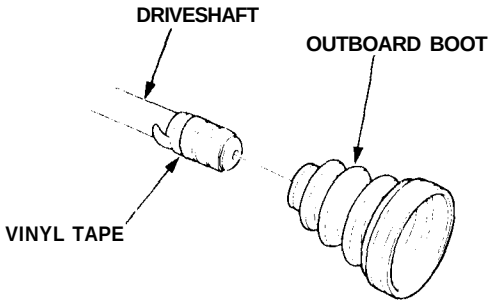

2. Install the stop ring into the driveshaft groove.
3. Install the spider on the driveshaft by aligning the marks on the spider and end of the driveshaft.
4. Install the set ring into the driveshaft groove.

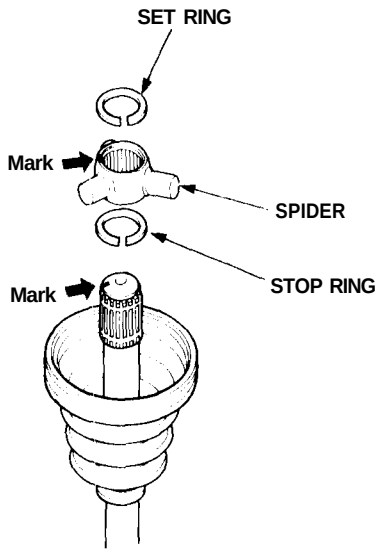

5. Fit the rollers to the spider with their high shoulders facing outward.

CAUTION:
- **Reinstall the rollers in their original positions on the spider.**
- **Hold the driveshaft assembly pointed up to prevent the rollers from falling off.**

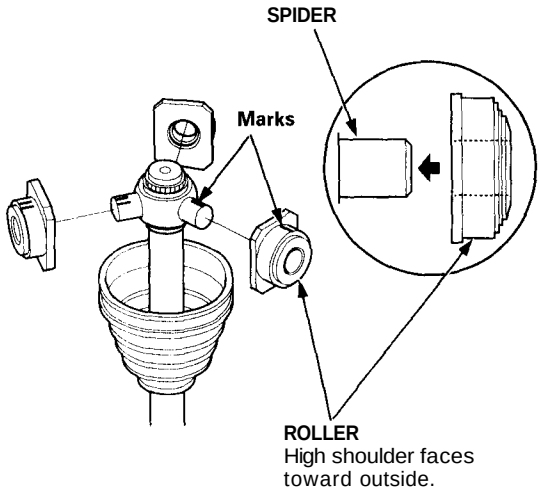

6. Pack the joint with joint grease included in the new joint boot set.

Grease Quantity: 170-180 g (6.0—6.3 oz)

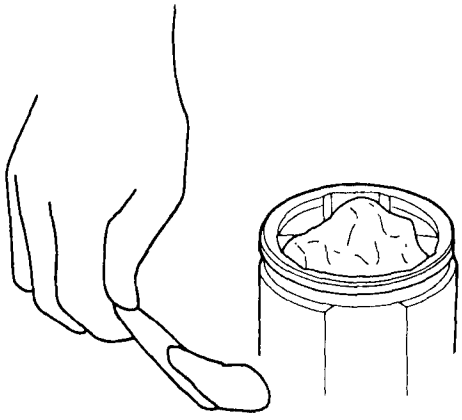

7. Install the spring and cap, then fit the outboard joint onto the driveshaft.

CAUTION: Reinstall the outboard joint in the original position on the rollers.

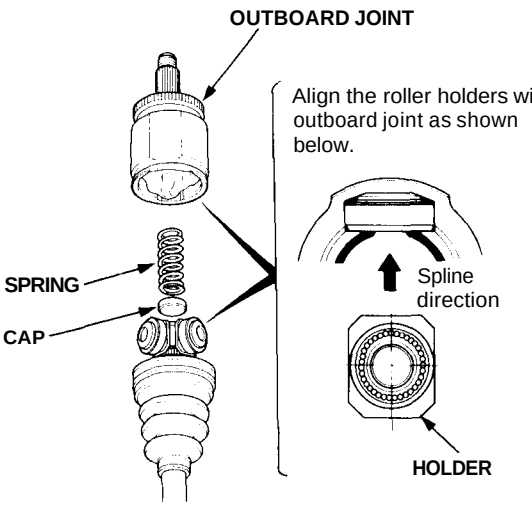

8. Fit the circlip into the outboard joint inner groove.

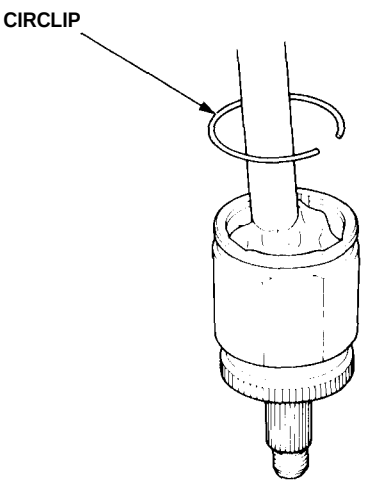

Inboard joint side

NOTE: Wrap the splines with vinyl tape to prevent damage to the boot.

9. Install the inboard boot to the driveshaft, then remove the vinyl tape.

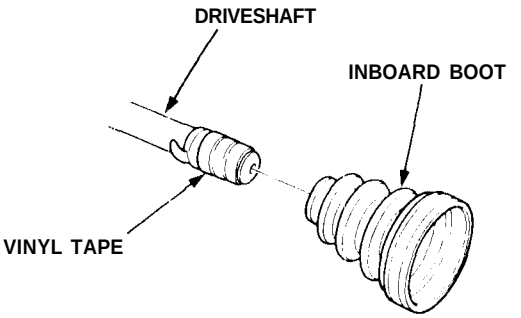

10. Install the stop ring into the driveshaft groove.

11. Install the spider on the driveshaft by aligning the marks on the spider and end of the driveshaft.

12. Install the set ring into the driveshaft groove.

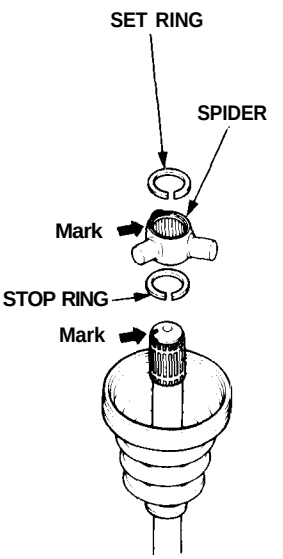

(cont'd)

Reassembly (cont'd)

13. Fit the rollers to the spider with their high shoulders facing outward.

CAUTION.

- **Reinstall the rollers in their original positions on the spider.**
- **Hold the driveshaft assembly with the rollers up to prevent them from falling off.**

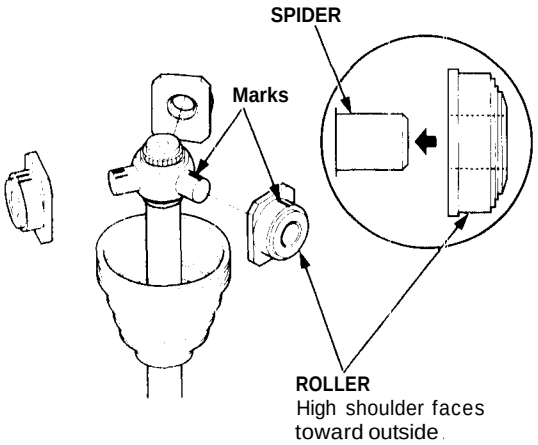

14. Pack the joint with joint grease included in the new joint boot set.

Grease Quantity: 120 - 130 g (4.2-4.6 oz)

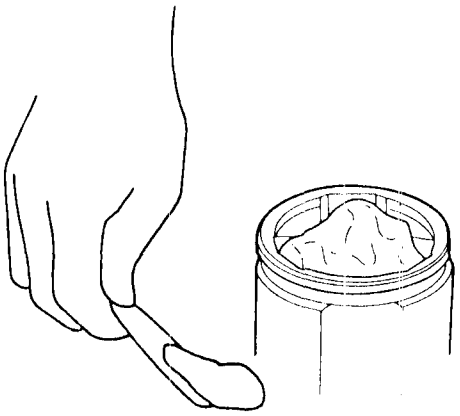

15. Fit the inboard joint onto the driveshaft.

CAUTION: Reinstall the inboard joint in the original position on the rollers.

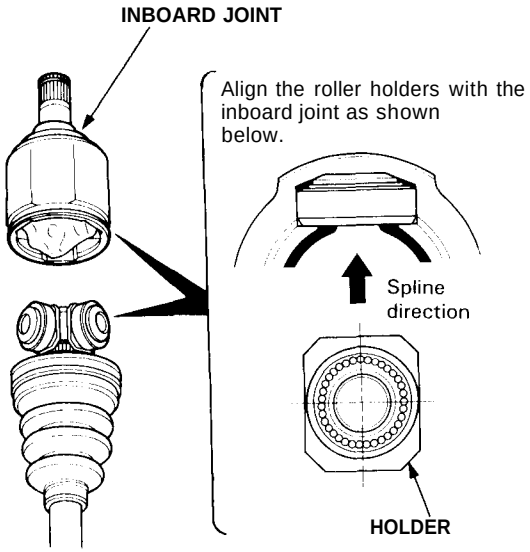

16. Adjust the length of the driveshafts to the figure below, then adjust the boots to halfway between full compression and extension. Bleed the air from the boot, and check that the engs of the boot seat are in the grooves of the joint and driveshaft.

Left Driveshaft
M/T: 501.0-506.0 mm (19.72-19.92 in)
A/T: 507.0-512.0 mm (19.96-20.16 in)

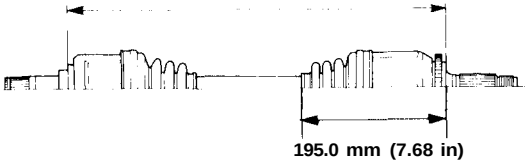

Right Driveshaft
M/T and A/T: 542.0 - 547.0 mm (21.34-21.54 in)

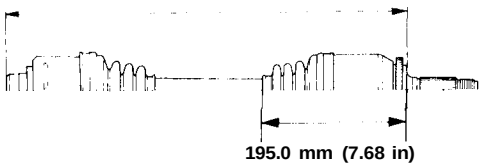

17. Install new boot bands on the boots, then bend both sets of locking tabs.

18. Lightly tap on the doubled-over portions to reduce their height.

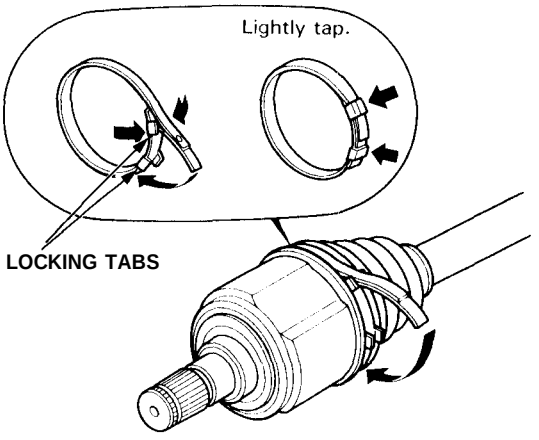

NOTE: Install the outboard joint in the knuckle before installing the driveshaft into the differential or intermediate shaft. Loosely install the spindle nut this time.

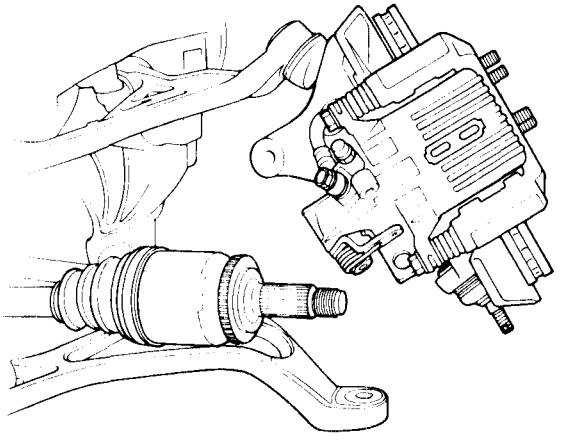

19. Install the new set rings in the driveshaft groove and intermediate shaft groove.

20. Apply a light film of grease around the set ring groove on the inboard joint, then install a new set ring and center it on the joint. The grease will keep the set ring centered, making the installation of the joint easier.

21. Install the inboard end of the driveshaft into differential or intermediate shaft.

CAUTION:

- **Always use a new set ring whenever the driveshaft is being installed.**
- **Make sure the left driveshaft locks in the differential side gear groove, and the inboard joint subaxle bottoms in the differential.**
- **Insert the right driveshaft inboard joint subaxle into the intermediate shaft until the intermediate shaft set ring locks in the groove in the right driveshaft.**

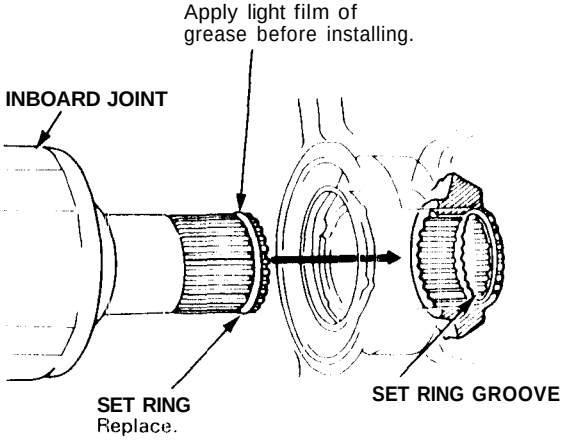

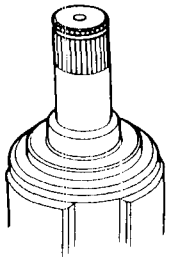

Left Driveshaft inboard end

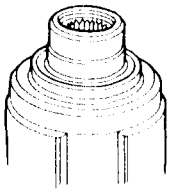

Right Driveshaft inboard end (Intermediate shaft side)

Intermediate Shaft

Replacement

1. Drain the fluid from the transmission (see section 13 M/T or section 14 A/T).

2. Remove the right driveshaft assembly (see page 16-3).

3. Remove the heat shield.

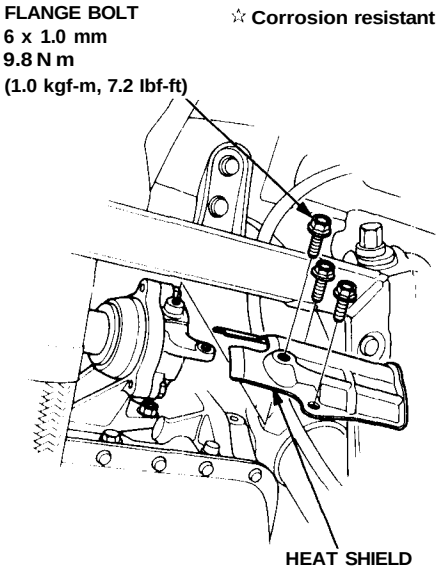

4. Make a mark on the support base and the bearing support during disassembly to ensure proper positioning during reassembly.

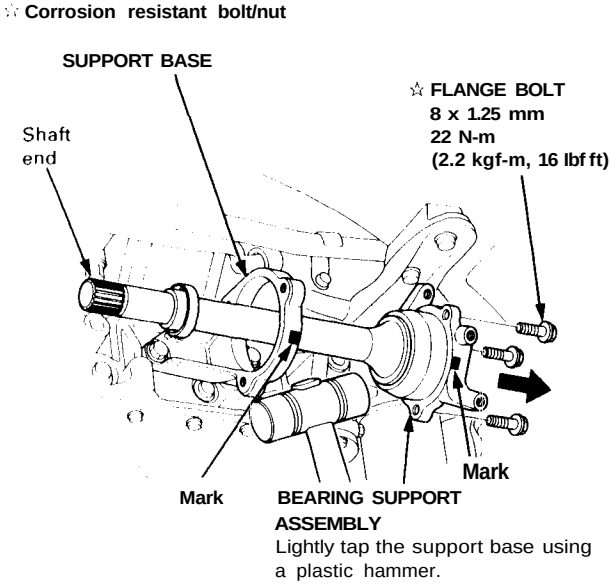

5. The bearing support assembly is a light press fit in the support base. To remove the bearing support assembly, remove the 8 x 1.25 mm flange bolts with the support base still attached to the engine block. Tap the flanged section of the bearing support with a plastic hammer toward the wheel side, then remove the bearing support assembly from the support base.

CAUTION: To prevent damage to the differential oil seal, hold the intermediate shaft horizontal until it is clear of the differential.

6. Remove the support base from the engine block.

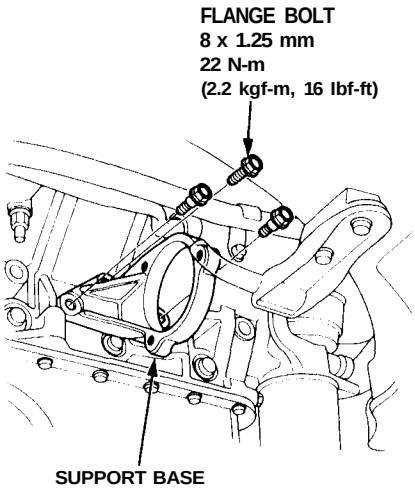

7. Install in the reverse order of removal. Align the marks, and install by tapping on the bearing support assembly shaft end.

Disassembly

CAUTION: The bearing support and support base are made of aluminum. Be careful not to damage them when servicing.

1. Remove the intermediate shaft outer seal from the bearing support.

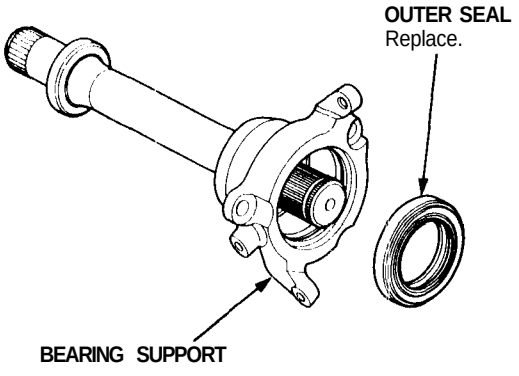

2. Remove the external circlip and internal circlip.

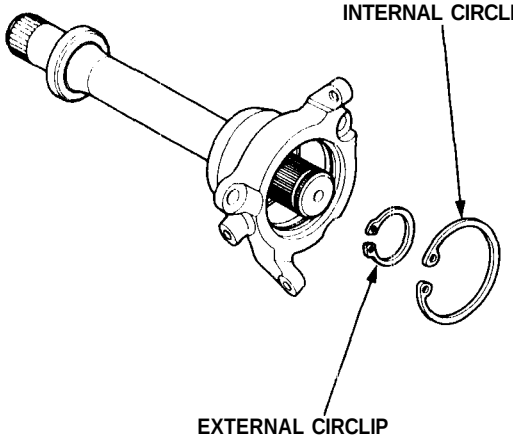

3. Press the intermediate shaft out of the shaft bearing using the special tool and a press.

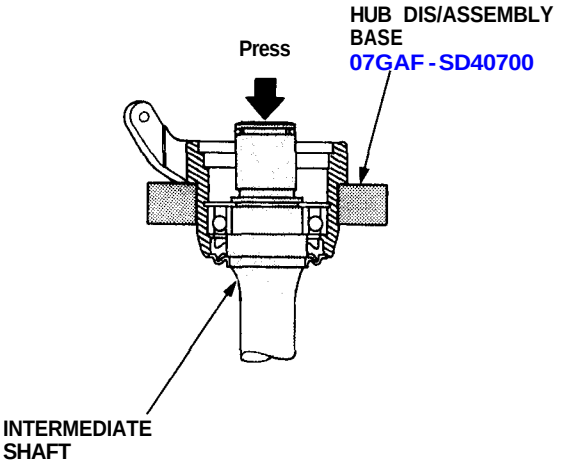

4. Remove the intermediate shaft inner seal from the bearing support.

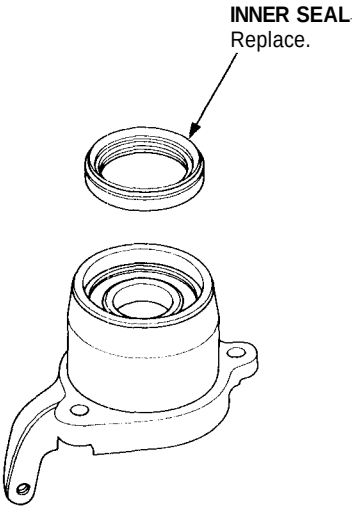

(cont'd)

Intermediate Shaft

Disassembly (cont'd)

5. Press the intermediate shaft bearing out of the bearing support using the special tools and & press.

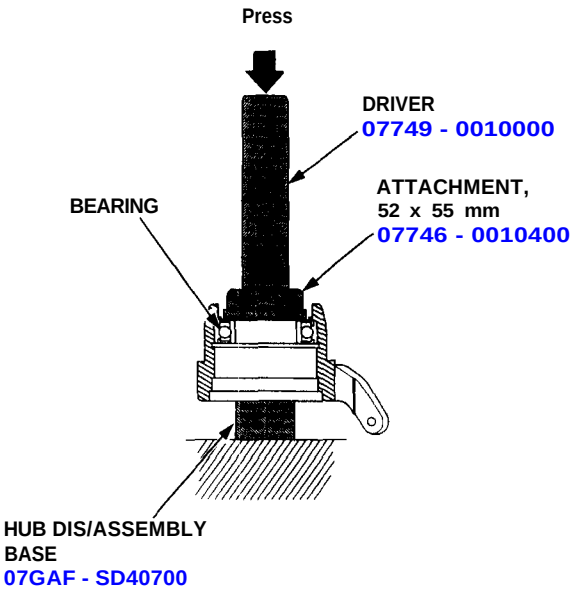

Index/Inspection

CAUTION:

- **The bearing support and support base are made of aluminum. Be careful not to damage them when servicing.**
- **The bearing support and support base are a matched set and must be replaced as an assembly.**

☆ **Corrosion resistant bolt/nut**

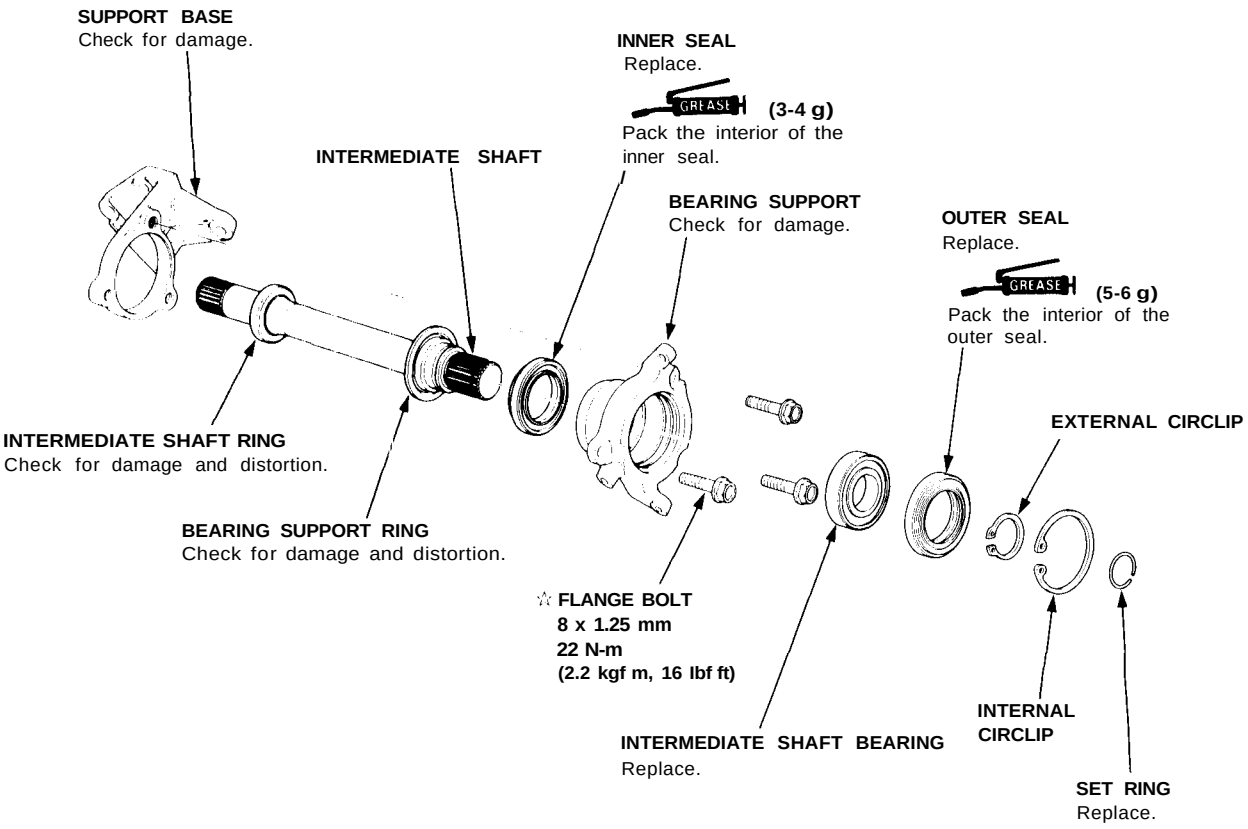

Intermediate Shaft

Reassembly

1. Press the intermediate shaft bearing into the bearing support using the special tools and a press.

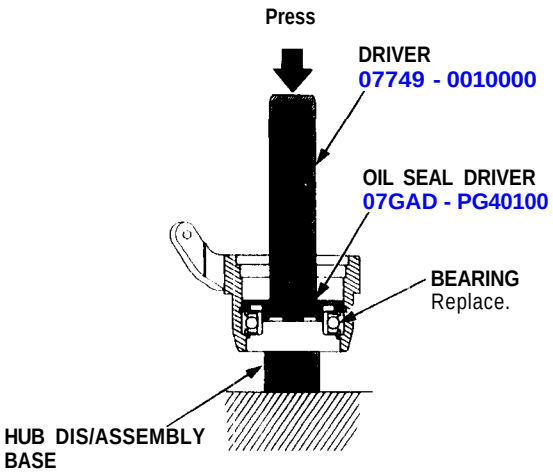

2. Seat the internal circlip in the groove of the bearing support.

CAUTION: Install the circlip with the radiused side facing out.

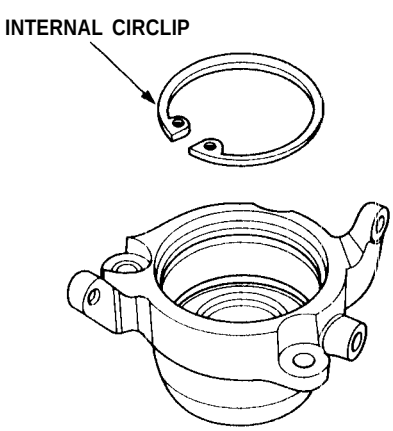

3. Press the intermediate shaft inner seal into the bearing support using the special tools and a press.

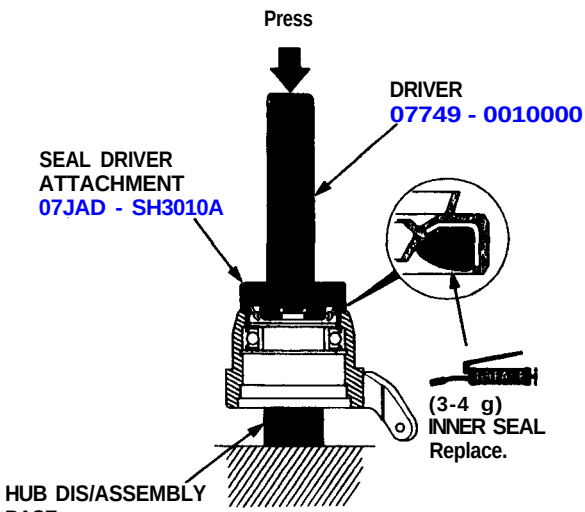

4. Press the intermediate shaft into the shaft bearing using the special tools and a press.

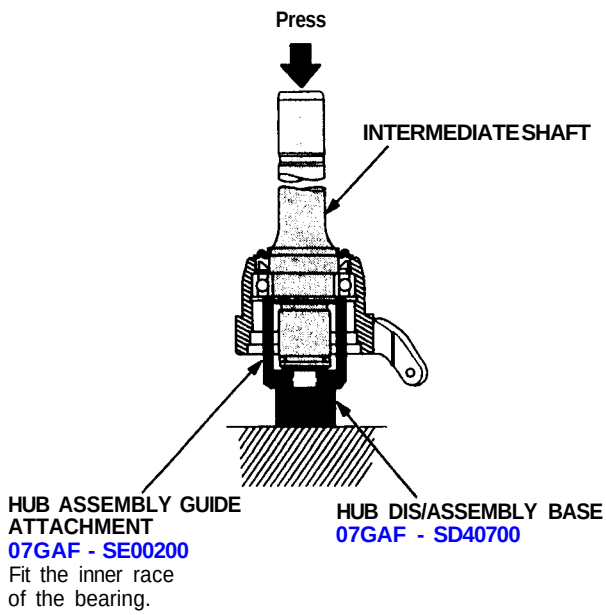

5. Seat the external circlip in the groove of the intermediate shaft.

CAUTION: Install the circlip with the radiused side facing out.

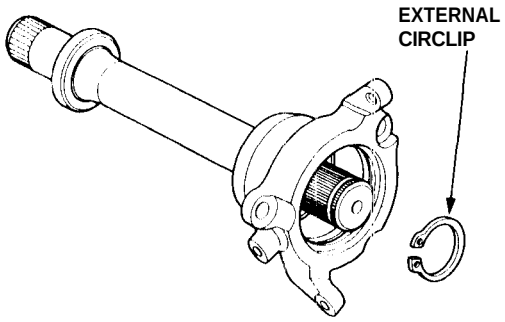

6. Press the outer seal into the bearing support using the special tools and a press.

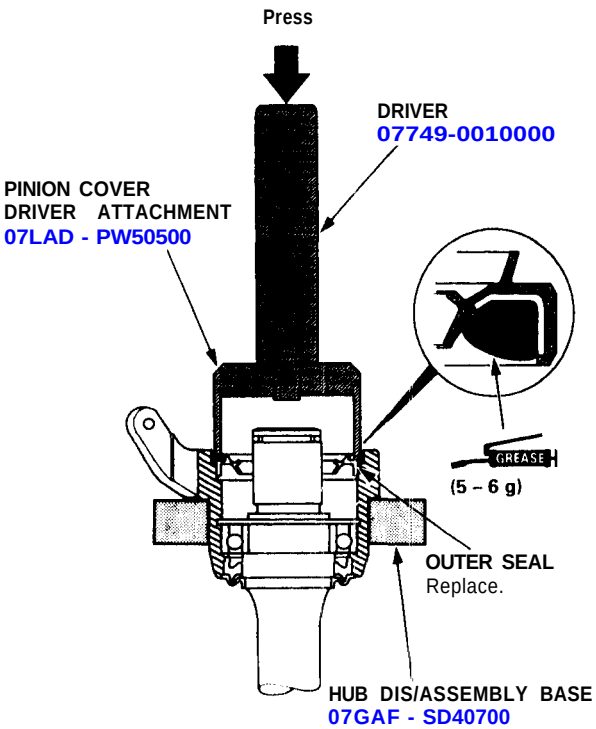

Steering

*: Read SRS precautions before working in this area

Special Tools 17–2
Component Location Index
  Manual Steering 17–18f
  Power Steering 17–3
System Description
  Steering Column 17–4
  Energy–absorbing Steering Column/Wheel 17–6
  Electrical Power Steering (EPS) 17–7
  Major Components 17–8
  System Operation 17–9
  Function and Operation . . . 17–10
Component Locations 17–16
EPS Control Unit Terminal Arrangement 17–20
Troubleshooting Precautions
  ’97–99 Models 17–22
  ’00–’05 Models 17–2c
Diagnostic Trouble Code (DTC) Indication 17–23
Symptom–to–System Chart
  ’97–99 Models 17–25
  ’00–’05 Models 17–3c
Troubleshooting Flowcharts
  Hard Steering 17–26
Inspection
  Steering Wheel Rotational Play 17–42
  Power Assist Check 17–42
  Steering Gearbox Adjustment 17–42
Steering Wheel
  *Removal 17–43
  *Disassembly/ Reassembly 17–44
  *Installation 17–45
Steering Column
  *Removal 17–47
  Inspection 17–49
  *Installation 17–50
Steering Gearbox
  Manual Steering
    Removal/Installation . . . 17–19f
    Component Location Index 17–21f
    Disassembly 17–22f
    Reassembly 17–25f
    Ball Joint Boot Replacement 17–30f
  Power Steering
    Removal/Installation . . . 17–53
    Component Location Index 17–57
    Inspection 17–58
    Ball Joint Boot Replacement 17–61
EPS Control Unit Replacement 17–62

Special Tools

Ref. No.	Tool Number	Description	Qty	Page Reference
①	07MAC – SL00200	Ball Joint Remover, 28 mm	1	17-53
②	07MAG – SL00100	Ball Joint Boot Clip Guide	1	17-61
③	07PAZ – 0010100	SCS Service Connector	1	17-23
④	07916 – SA50001	Locknut Wrench, 40 mm	1	17-59, 17-42
⑤	07974 – SD90000	Steering Inspection Arm	1	17-58

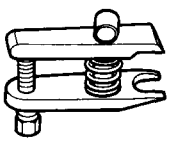

①

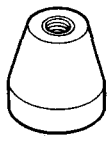

②

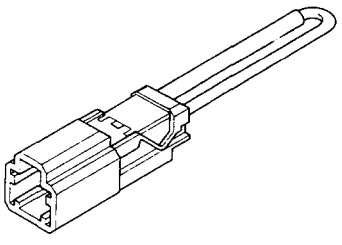

③



④

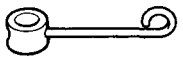

⑤

Component Locations

Index

NOTE:

- If an intact airbag assembly has been removed from a scrapped vehicle or has been found defective or damaged during transit, storage or service, it should be deployed (see section 24).
- Before removing the gearbox, remove the ignition key to lock the steering shaft.
- After installing the gearbox, check the wheel alignment and adjust if necessary.

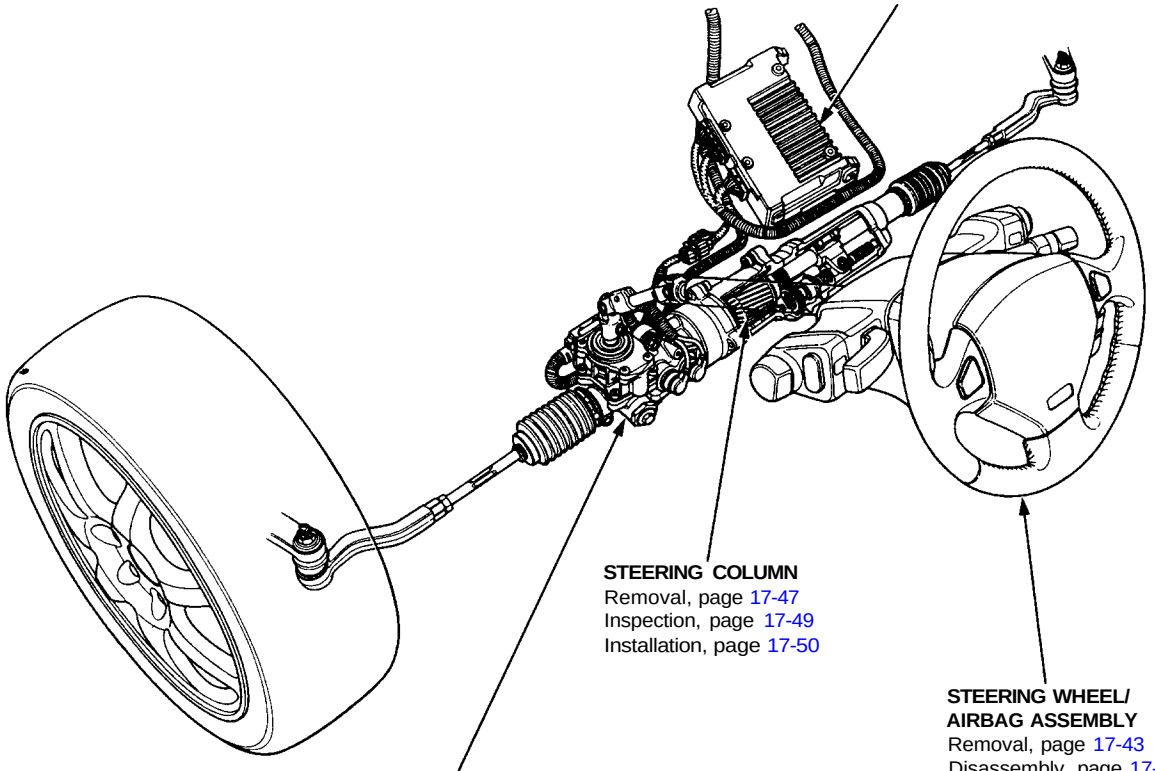

System Description

Steering Column

The NSX/NSX-T has a tilt/telescopic steering column. The tilt/telescopic mechanism makes it possible to adjust the steering wheel in fore and aft, and up and down directions.

Tilt Mechanism

In the upper portion of the steering column is a joint on the steering shaft. This joint allows the steering wheel to be adjusted up or down. When the tilt lever is operated, the lock gears are detached from the column gear to release the lock. The column moves upward or downward on two pivot bolts. When the tilt lever is returned to a fixed position after selecting the steering wheel height, the lock gear is engaged with the column gear to secure the column.

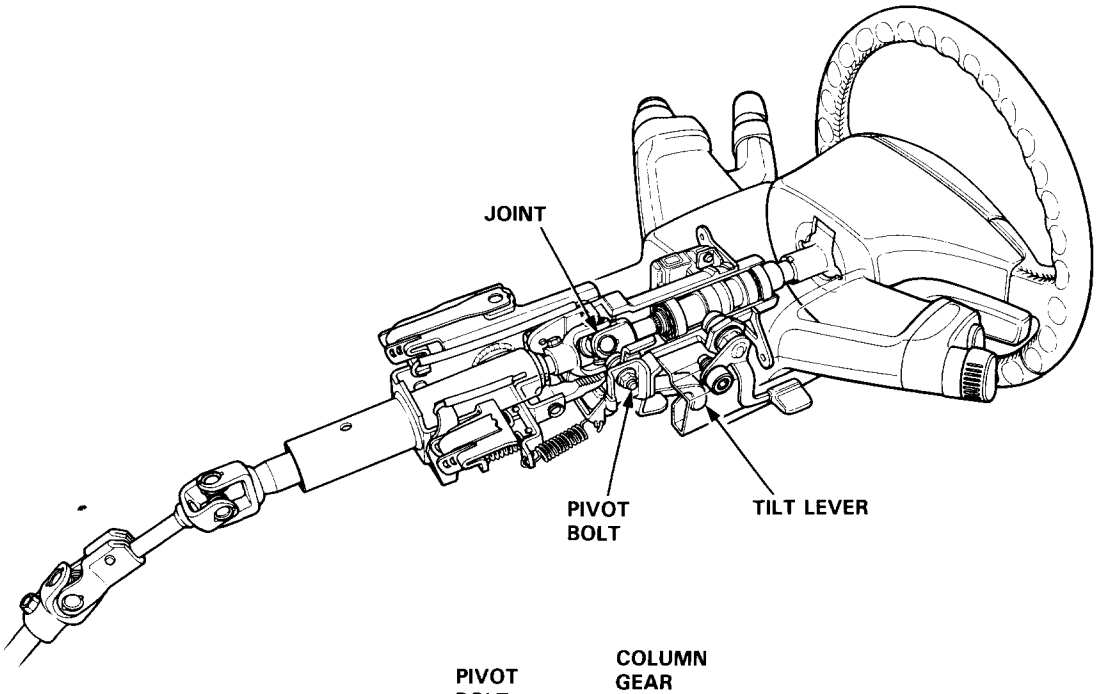

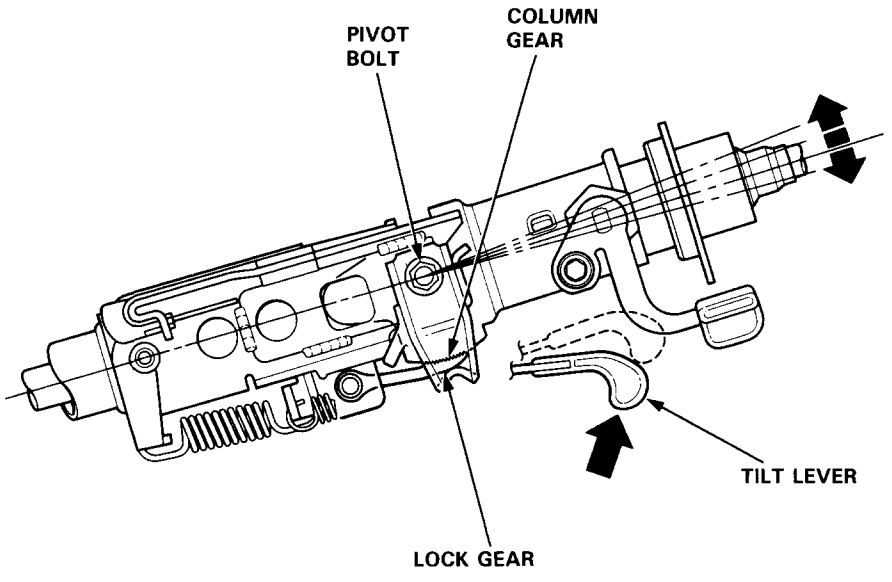

Telescopic Mechanism

The upper steering shaft is divided into two shafts, connected by splines, making it possible for the shaft to telescope while transmitting the rotation of the steering wheel. When the telescopic lever is lowered, the lever pivot turns in a direction to loosen the stop shim at the tip of the lever pivot, allowing the shaft to telescope. The telescopic stroke is limited by the slot and stop on the movable shaft. After selecting a steering wheel position and locking the telescopic lever, the stop shim presses, against the movable shaft, holding it in position.

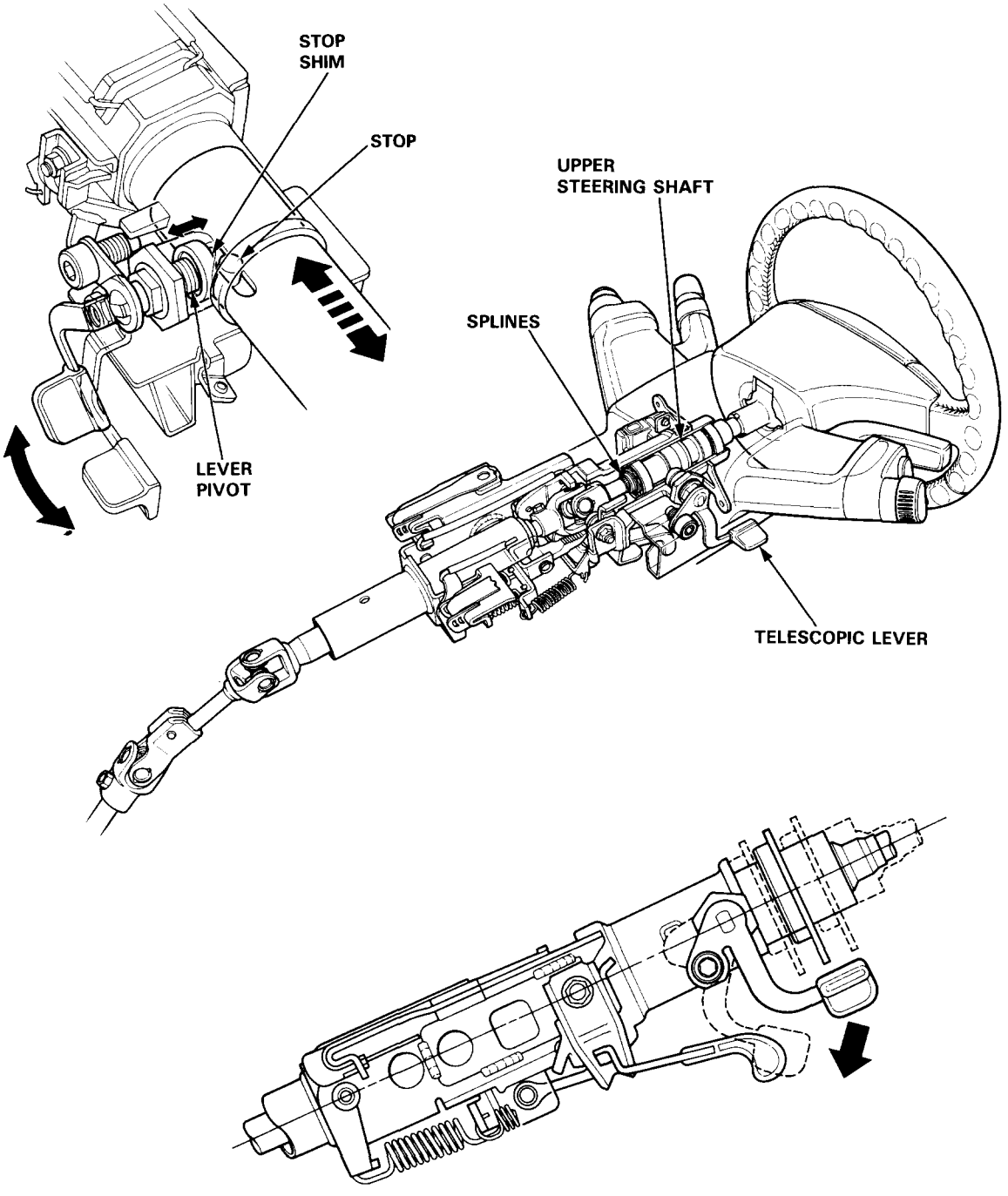

System Description

Energy-absorbing Steering Column/Wheel

Both the steering column and steering wheel are designed to absorb impact energy during a collision.

Steering Wheel

The steering wheel absorbs the energy of a collision through the deformation of the spoke portion. Should the impact absorbing capacity of the column side decrease due to the deformation of the vehicle body during a collision, the steering wheel will help absorb the impact.

Steering Column

The steering column is fastened on the body through a U-shaped plate, and the lower part of the column is inserted into a lower holder. Due to this construction, the steering column will slide in its axial direction when a large impact is given in the axial direction of the column. Since the U-shaped plate is fastened to the body, the U-shaped plate is bent and deformed along the guide when the column slides in its axial direction. Through the deformation of the plate, the energy is absorbed and the column slides forward. When exposed to a greater impact, a shear pin will break and the energy is absorbed by the lower shaft.

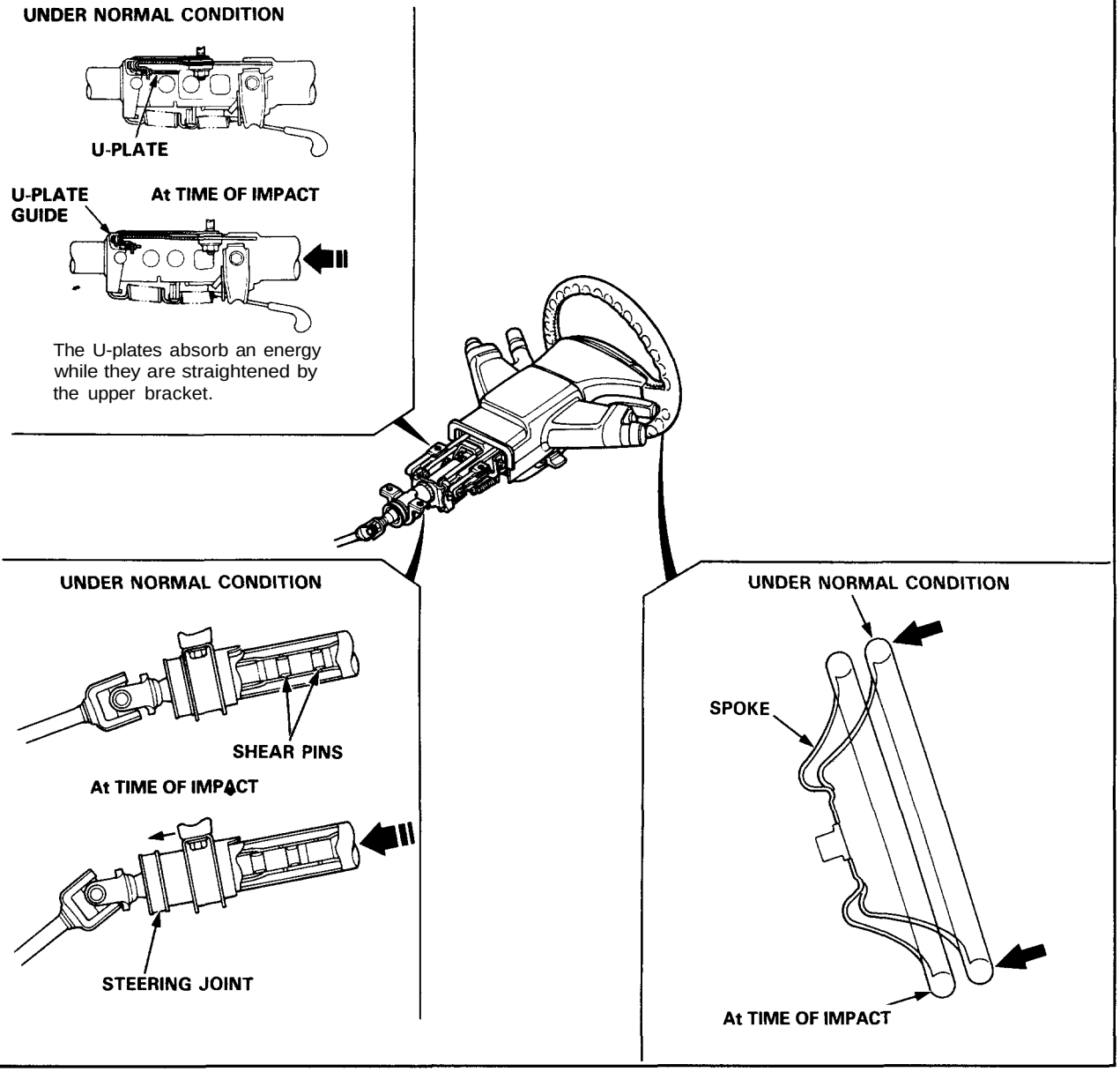

Electrical Power Steering (EPS)

Outline

The NSX/NSX-T uses an electric motor-driven power steering, which possesses the characteristics best suited for a mid-engine automobile. This system is a power-assisted steering device, with a motor inside the steering gearbox driven by the EPS control unit. Its distinctive features are described below:

- Minimized loss of engine horsepower and decreased fuel consumption.
- A linear steering feel and the reduction of kickback.
- The system is compact and lightweight because it requires no complicated hydraulic piping, etc.

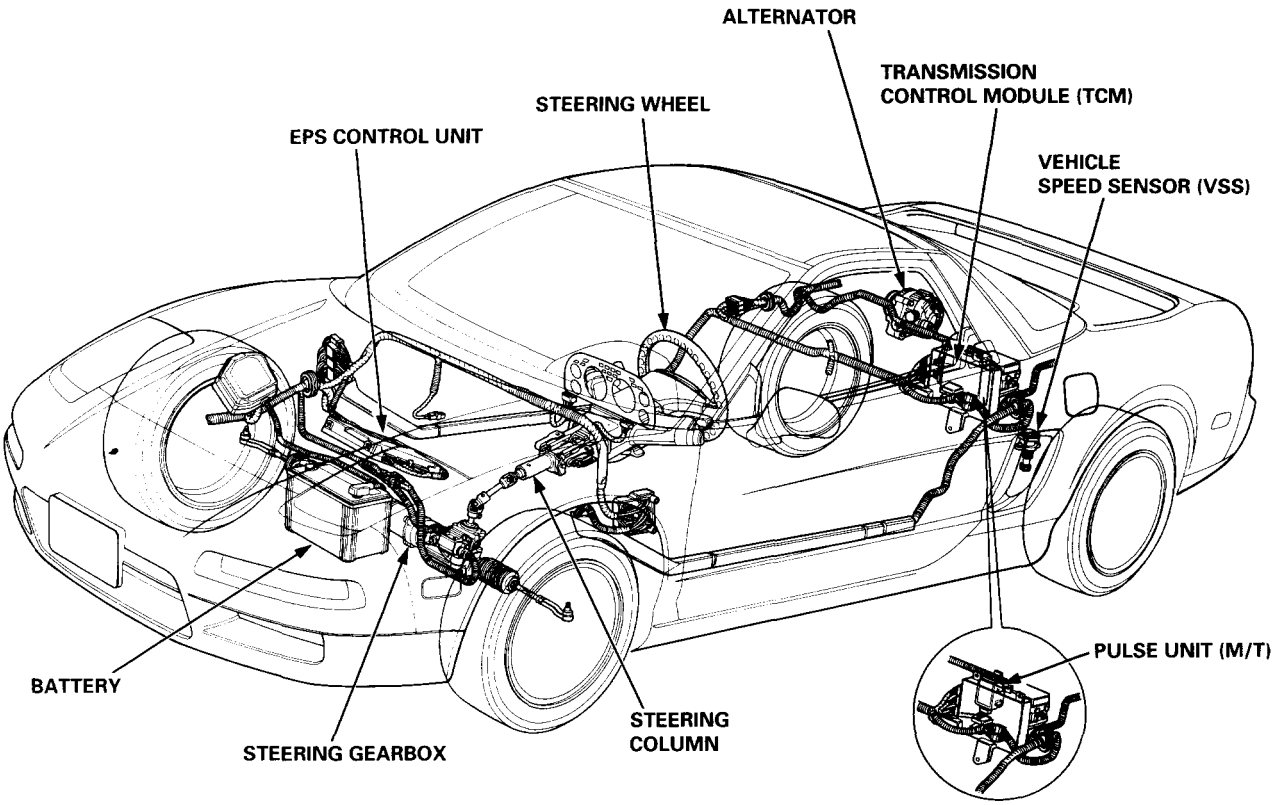

System Description

Major Components

The Electrical Power Steering system is composed of the following major components:

- A steering gearbox that converts rotary operation of the steering wheel into transverse operation via a rack and pinion mechanism. Steering sensors and an actuating motor are incorporated.
- A control unit that computes the optimum amount of power assistance, taking into account steering torque, and vehicle speed. Self-diagnosis functions are included.
- A power module in the EPS control unit that drives the motor according to the signals from the EPS control unit. A current sensor is built in to give feedback information to the EPS control unit. Two relays shut off the power if a problem in the system occurs.
- The countershaft speed sensor on the automatic transmission or the differential speed sensor on the manual transmission sends a vehicle speed signal to the EPS control unit. Also the speedometer sends a vehicle speed signal to the EPS control unit. The two signals are used as a double-check.

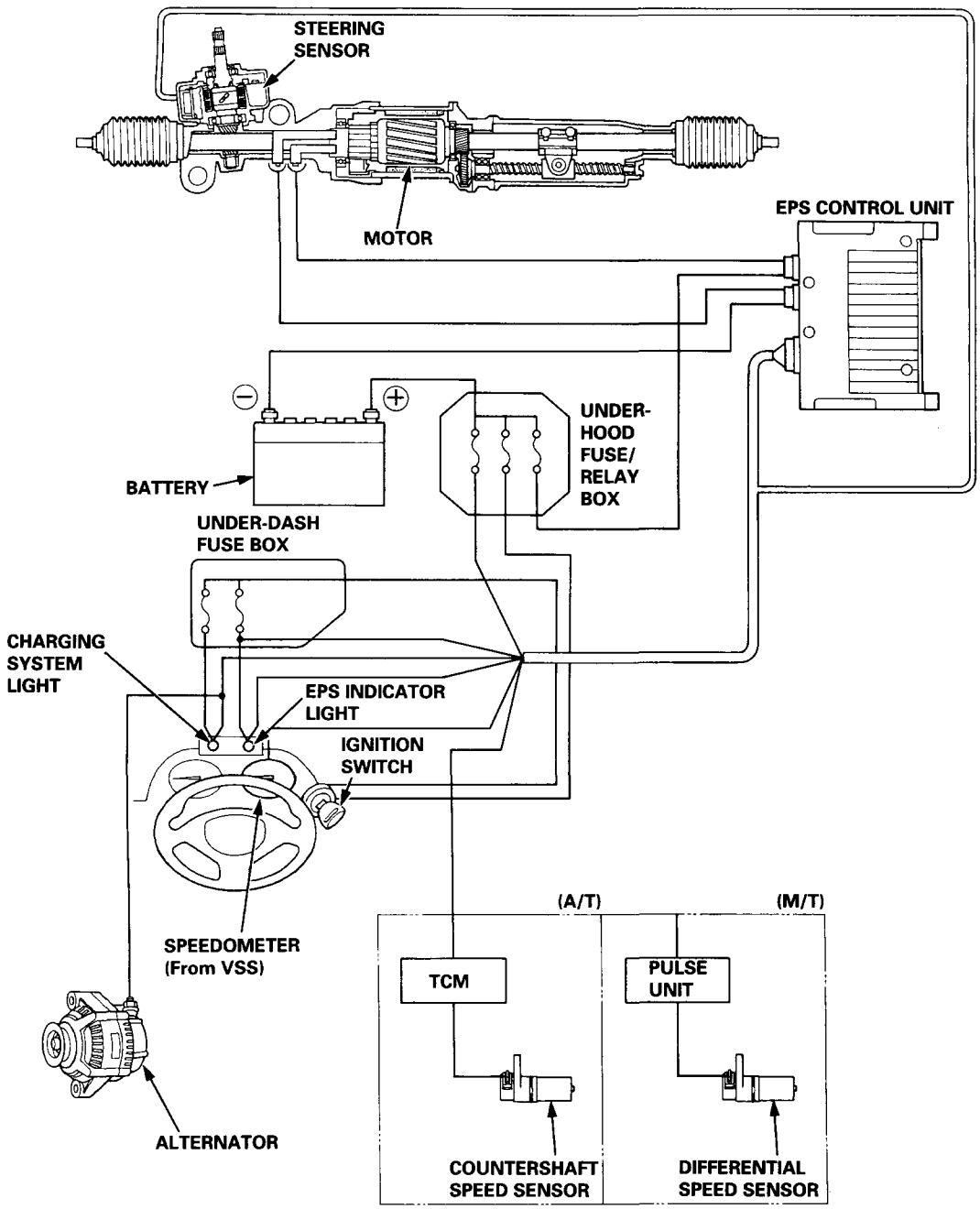

System Operation

Manual Steering Operation

Steering wheel input rotates the pinion of the gearbox through a universal joint. Due to the rack and pinion mechanism, the rotation of pinion is converted into a transverse motion at the rack, which steers the front wheels throught the tie-rods and knuckles the same as an ordinary rack and pinion system.

Assisting Operation

In addition to the manual steering operation, the steering sensor on the pinion shaft transmits a signal to the EPS control unit when it receives a steering input. The EPS control unit calculates an adequate motor control with addition of vehicle speed signals. Based on the signal from the sensors, the EPS control unit drives the motor inside the gearbox. The torque generated by the motor is transmitted to a ball screw, through gears, and converted into an assisting thrust in the axial direction of rack. The assisting thrust acts in the steering direction and lessens the steering force required at the steering wheel.

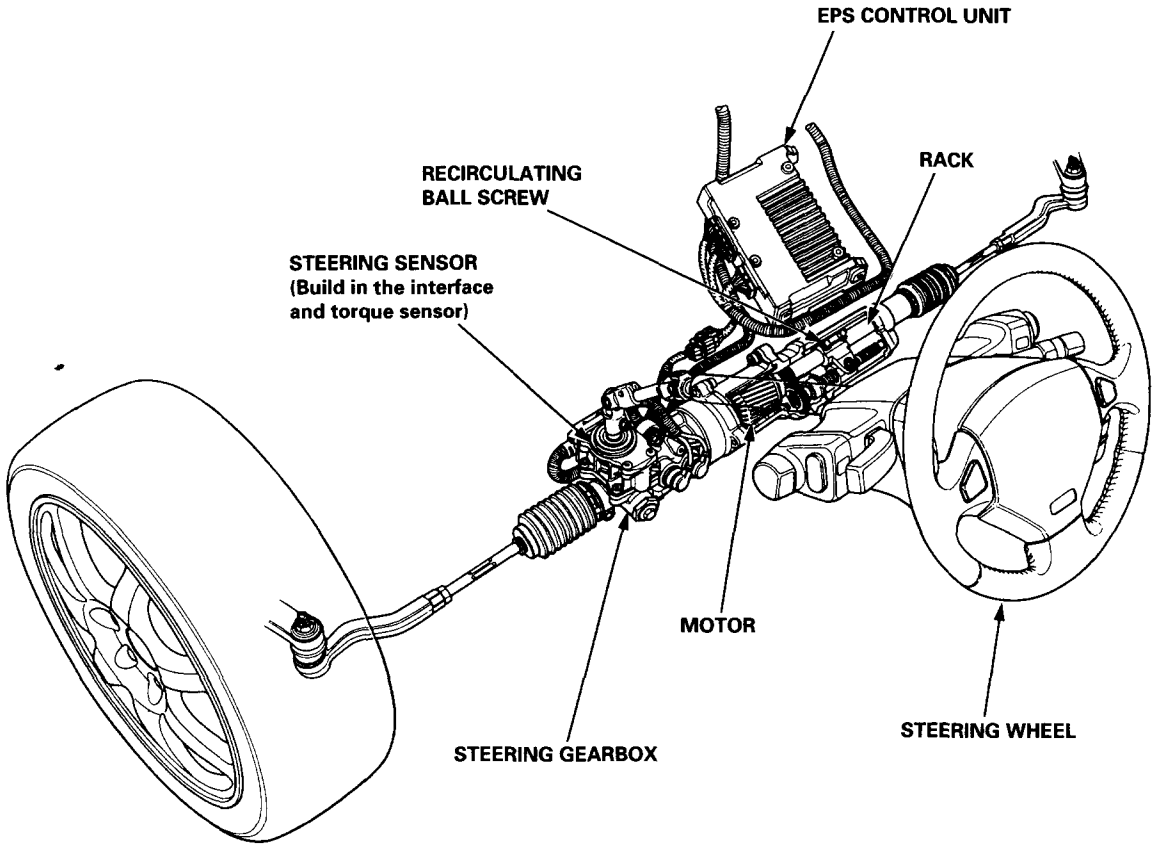

System Description

Function and Operation

Steering Sensor
The steering sensor consists of a torque sensor, an interface.

Torque Sensor
The torque sensor converts steering torque input and its direction to voltage signals, in conjunction with the interface.
A torsional force caused by steering operation is converted to an axial movement of a slider core. A variable differential transformer is installed around the slider core.
Within the transformer are three coils, a primary coil on the inside, and two secondary coils, one for right turns and one for left turns.
Alternating current is passed through the primary coil when the system is energized. The amount of mutual induction from the primary coil to the secondary coils changes depending on the position of the slider coil.
The input shaft and the slider are one piece. Rotation of the shaft moves the slider in a circular direction. The pinion is turned via the torsion bar. The slider core is installed on the pinion shaft on grooves, and turns with the pinion shaft.
When there is little resistance, the input shaft torsion bar, pinion shaft, and the slider core turn together to the same angle. The slider core does not move up/down.

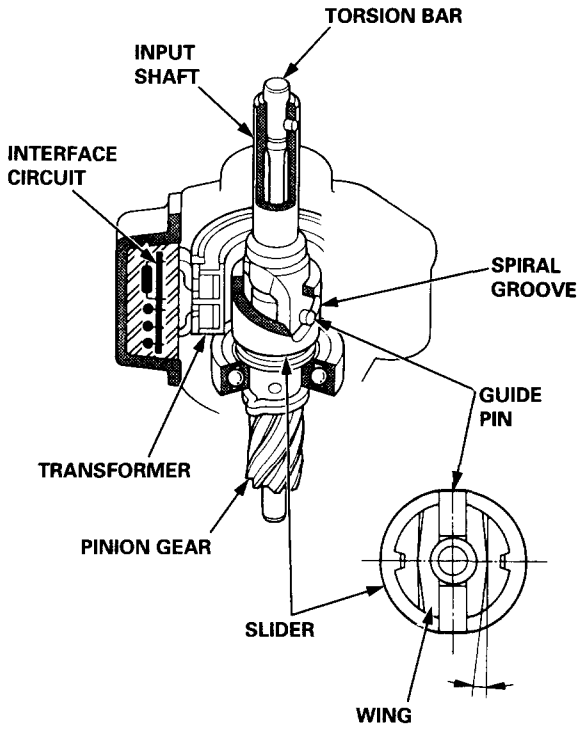

When there is resistance on the input shaft (hard to steer situation), and the slider pin is turned at an angle by the steering wheel, the torsion bar is twisted due to the resistance. Accordingly, the pinion shaft turns at a smaller angle. The difference in the turning angles changes the position of the slider pin in the groove, forcing the slider core upward or downward, depending on the direction of the direction of the turn.

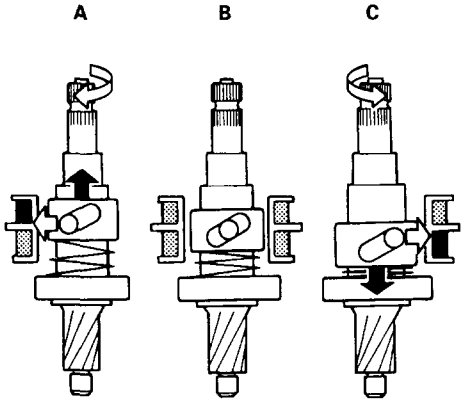

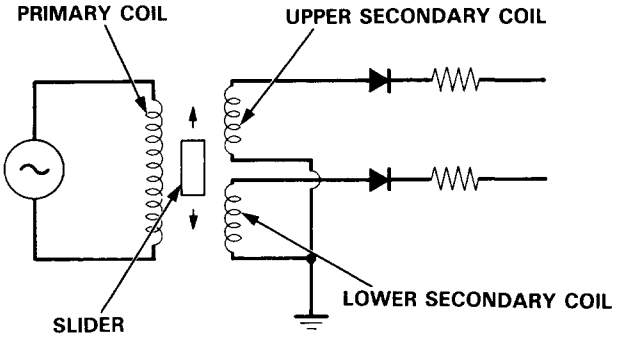

DWG No.	Steering condition	Slider movement	Induction voltage on secondary coil
A	Steering to right (load steering)	Upward shift	Voltage on upper coil increases, and voltage on the lower decreases
B	Advancing straight ahead (no load steering)	Neutral	Voltage on upper and lower coils are equal
C	Steering to left (load steering)	Downward shift	Voltage on lower coil increases, and voltage on the upper decreases

Interface Circuit

The interface circuit is housed inside the steering gearbox near the pinion. It rectifies and amplifies the signals from the torque sensor, and transmits the steering signals to the EPS control unit.

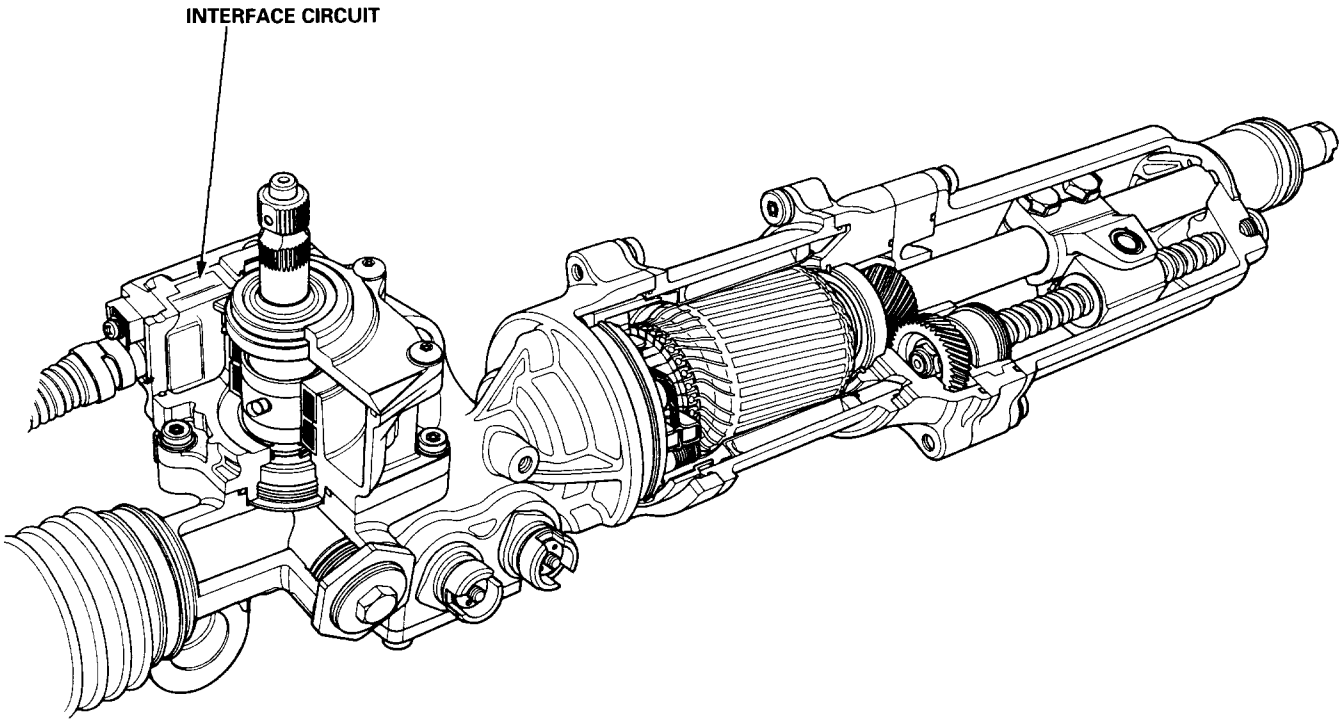

(cont'd)

Function and Operation (cont'd)

EPS Control Unit

The control unit receives input signals from the vehicle speed sensors, torque sensor. It performs a multitude of control functions, including a circuit which can detect troubles in each functional part of the system and the control unit itself. The control unit operates the system while the engine is in the process of starting, on receipt of voltage generated by the alternator. The system remains operational if the engine stalls with the ignition switch in ON (II) position.

Basic Control

(1) Travelling speeds are compiled into data, receiving input signals from the vehicle's speed sensors.
(2) The magnitude and direction of torque are compiled into data, receiving input signals from the torque sensor.
(3) The rotational speed and direction of steering are compiled into data, receiving calculated data.
(4) Determination of motor torque data from the prescribed assisting force map, based on the vehicle speed data, steering rotational speed data and the steering torque data.
(5) Changeover of control modes based on data on vehicle speed, direction of torque and rotational direction of steering.

Normal Control Mode:

The rotational direction of motor is determined after changing over to the left/right steering mode in accordance with torque direction data. The mode is switched to the straight ahead mode when the output data is zero.

Return Control Mode:

According to torque direction data and steering rotational direction data, the mode is changed over to the return control mode to improve the steering return characteristic.

Damper Control Mode:

According to vehicle speed data, torque value data and steering rotational speed data, the mode is changed over to the damper control mode to improve the convergence property of the steering.

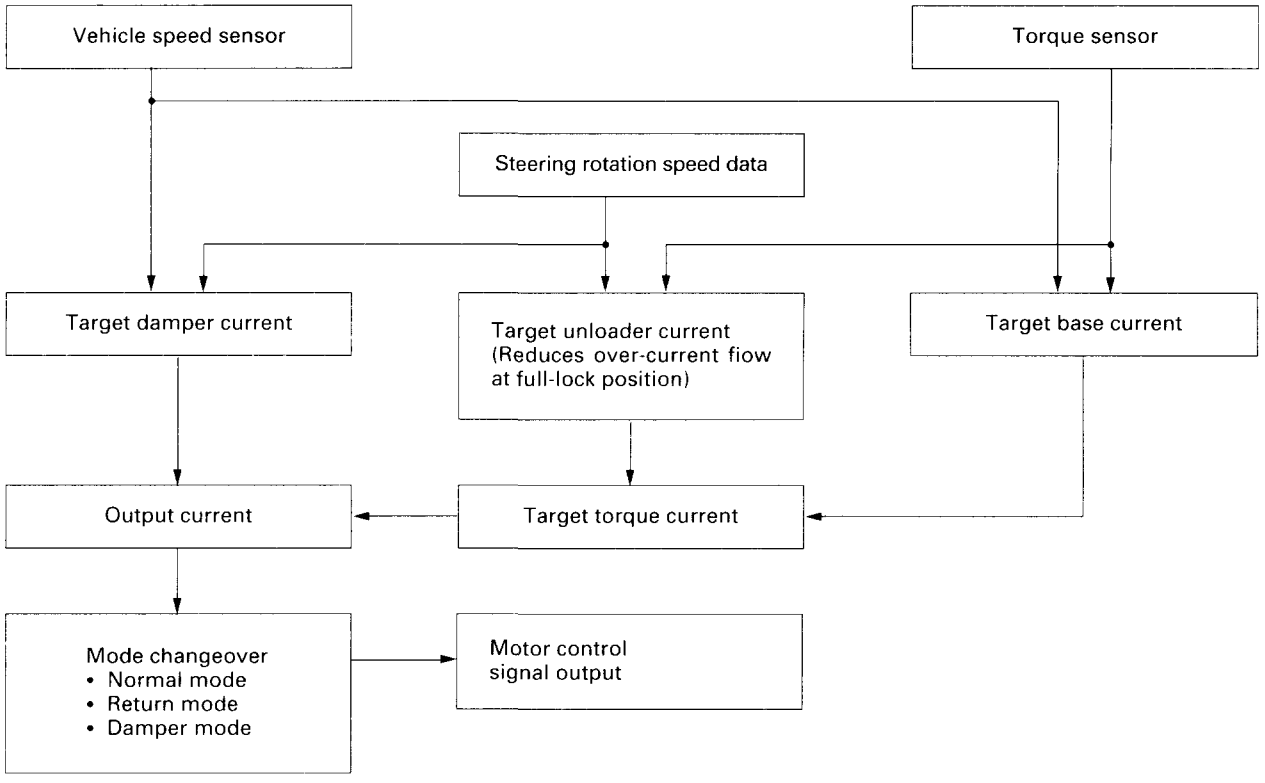

Self-Diagnosis Function

The EPS control unit monitors the system inputs and outputs, and the driving current of the motor. If there is a problem in the system, the control unit turns the system off by actuating the relay. Power assist stops and normal manual steering operation resumes. The control unit also turns the EPS indicator light on to alert the driver, and memorizes the problem in the form of a code. Connecting the terminals of the service check connector with the SCS service connector (special tool) enables the EPS indicator light to blink the problem code when the ignition switch is turned on (II).

Unloader Control

If the steering wheel is turned fully and held in the full-lock position, the steering torque reaches the maximum point, and an over-current flows to the motor. The control unit detects this and reduces the current flow to the motor.

Average Moving Current Control

The electric current flow to the motor is estimated from the current values detected by the current sensor, and the average current is obtained at two second intervals. The motor driving current is suppressed when the average current value exceeds a predetermined marginal value. The control unit regulates the motor current during continuous loading to suppress any excessive temperature rise in the motor.

(cont'd)

Function and Operation (cont'd)

The power module in the EPS control unit consists of a driving circuit, current sensor, field effect transistor (FET) bridge circuit, and two relays. It receives control signals from the central processing unit (CPU) and controls the driving current of the motor. The driving circuit controls the rotational direction and speed of the motor by driving the FET bridge circuit with a pulse width modulation (PWM) method on receipt of an input of driving signals from the CPU.

Rotational Speed Control

The PWM driving signal is a digital signal repeating the process of voltage ON/OFF at a constant frequency, which changes the ratio of ON time per one cycle of this signal. The ratio is called the duty ratio. When there is a change in duty ratio, the average voltage changes as smoothly as an analog type. The ratio of digital signal voltage (E) and the average voltage (V) is called the duty ratio (δ). Its relationship is expressed by $V = E \times \delta$. When the duty ratio is low, the rotational speed of motor is slow. As the duty ratio increases, the rotational speed increases to increase the torque.

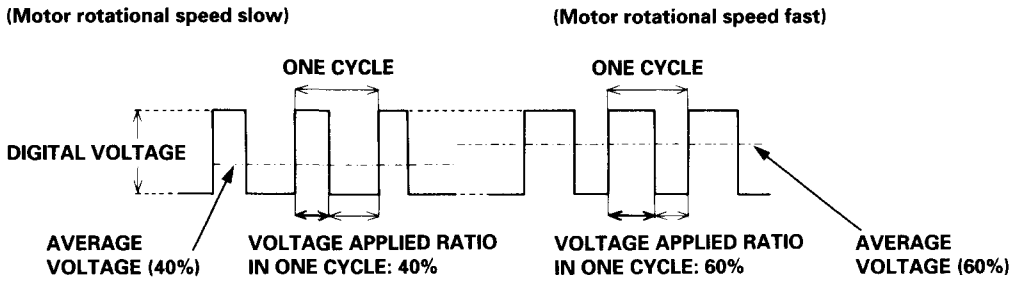

Rotational Direction Control

Normal Mode Control:

The table below shows the normal control mode to control the flow of current from the battery:

Steering condition	FET (1)	FET (2)	FET (3)	FET (4)	Motor operation
Steering to right	PWM	OFF	OFF	ON	Operates in direction steering to the right
Straight ahead	OFF	OFF	OFF	OFF	Stops
Steering to left	OFF	PWM	ON	OFF	Operates in direction steering to the left

("PWM" in the table indicates PWM control based on torque sensor data).

Return Control Mode:

Return control mode improves the steering return characteristics. ("PWM" in the table denotes PWM control based on torque sensor data while "PWM-r" PWM control based on steering rotation speed data).

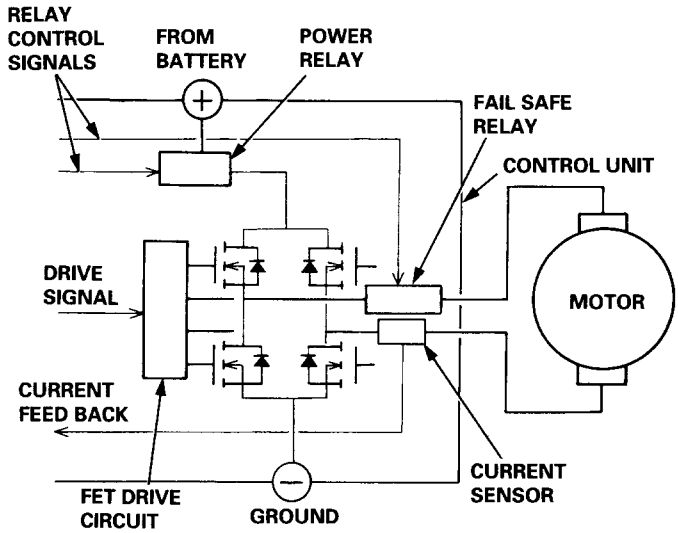

Steering condition	FET (1)	FET (2)	FET (3)	FET (4)
Return from right steering to straight ahead	PWM	OFF	OFF	PWM-r
Return from left steering to straight ahead	OFF	PWM	PWM-r	OFF

Damper Control Mode:

The damper mode control, which improves the convergence of steering, is performed with damper mode signals from the CPU.

Motor Driving Current Control

A current sensor, power relay and fail-safe relay are built into the control unit. The current sensor detects motor driving current. If there is a problem in the system, a cut-off signal is sent from the CPU to relay, then the relay cuts off motor current to switch to manual steering operation.

Steering Gearbox

Motor and Power Assist Mechanism

A motor is housed inside the gearbox housing. It consists of a yoke with a permanent magnet fixed in it, a rotor with a field coil, and brushes which pass electricity to rotor commutators. The motor is on the rack shaft of the steering gearbox. The drive current from the control unit flows through the power relay and fail-safe relay to the brushes of the motor.

The drive current flows to rotor commutators through brushes, exciting the field coil of the rotor and rotates the rotor with the magnetic action of the permanent magnet inside the yoke. The rotor rotates in the opposite direction when the direction of drive current is reversed.

The rotation torque of the motor is transmitted to the ball screw throught the helical gear. The rotation torque on the ball screw is converted into assist thrust in the direction of steering rack by the recirculating ball screw. The mechanical advantage of the recirculating ball screw, compaired to a conventional rack and pinion, acts to reduce the steering force to the steering rack through the joint, to lessen the steering effort required at the steering wheel.

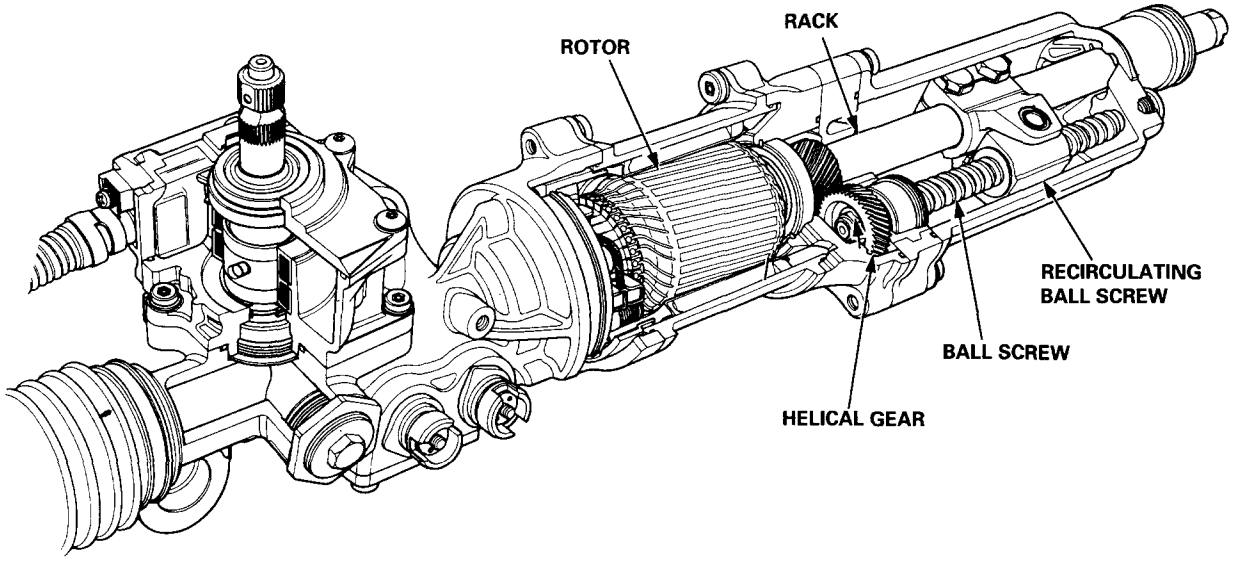

Recirculating Ball Screw

The recirculating ball screw is constructed so that steel balls roll between the screw shaft and the nut, and those coming out of the screw face enter the screw groove again through a tube for recirculation. The rotation torque on the shaft is converted into thrust in an axial direction as the slope of the screw shaft presses against the nut through the steel balls. Since the torque conversion is made in this method through the screw shaft and the steel balls, the friction is small, high transmission efficiency is obtained for both the forward and backward directions, and the steering feels identical to the ordinary manual steering.

Furthermore, since the force from the backward direction (force pressing the steering rack) is converted into the rotation torque of the screw shaft, instantaneous kick-back from the road surface will rapidly rotate the motor. In such a rapid rotation, the inertia of the motor increases, which acts to reduce the kick-back. Any great kick-back will be transmitted from the steering rack to the torque sensor on the pinion, which acts to twist the pinion shaft in the same direction as the input direction of kick-back. As a result, the motor operates the kick-back to reduce assist force.

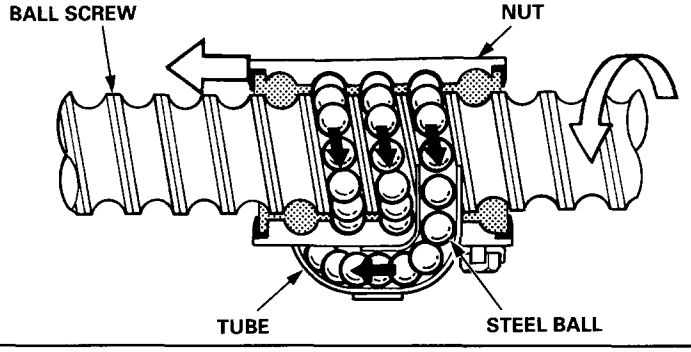

Component Locations

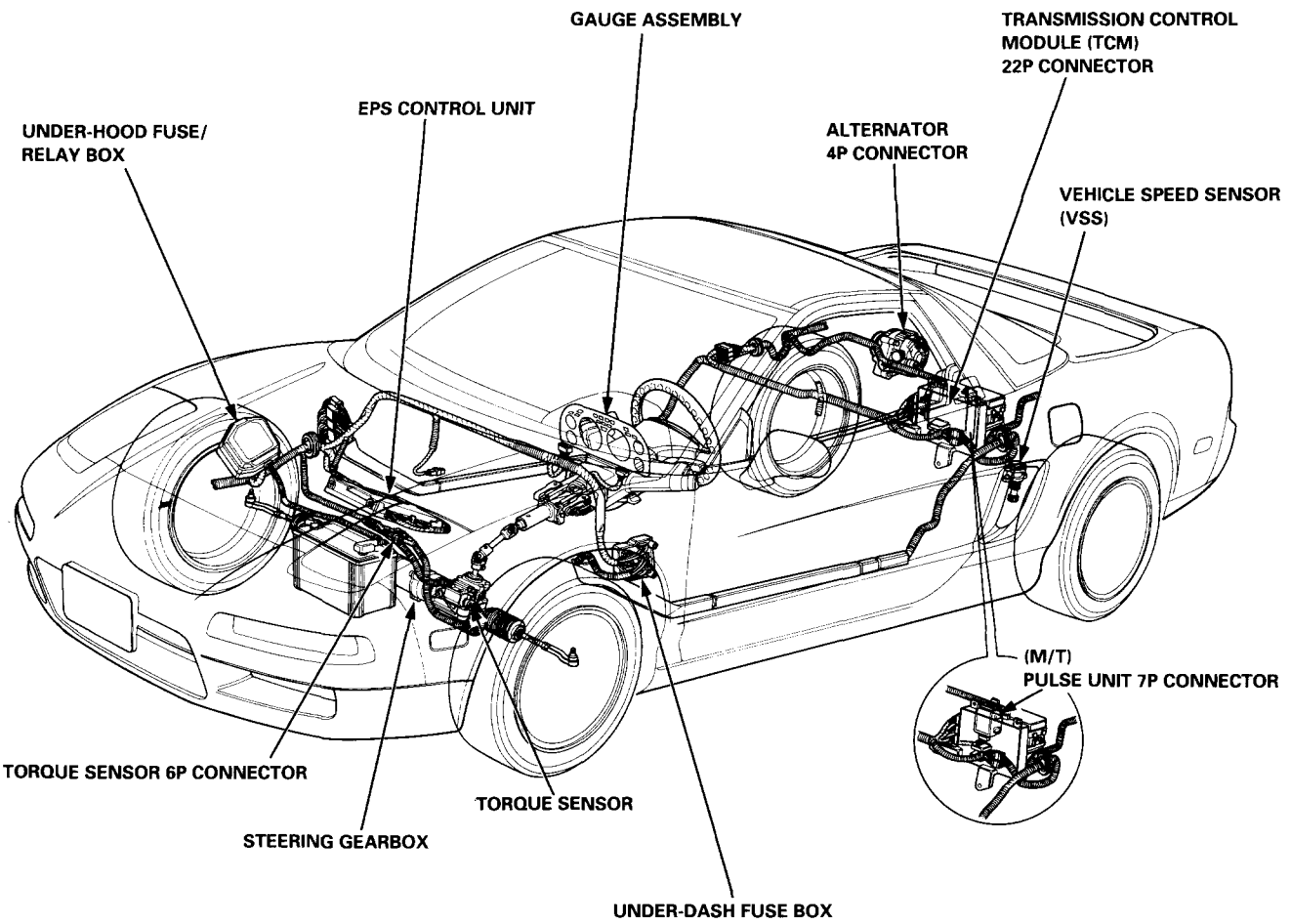

GAUGE ASSEMBLY

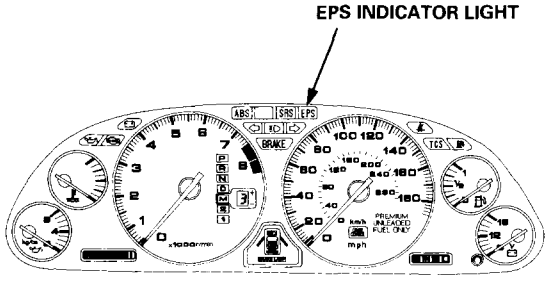

UNDER-HOOD FUSE/RELAY BOX

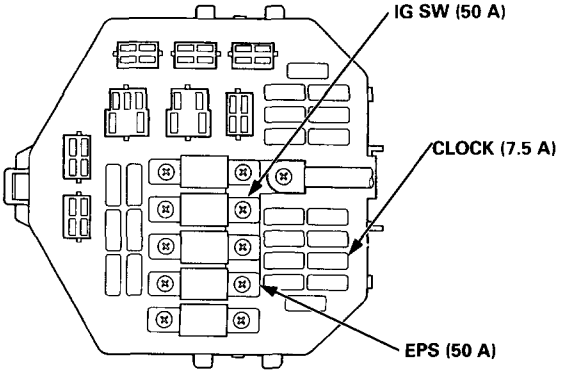

UNDER-DASH FUSE BOX

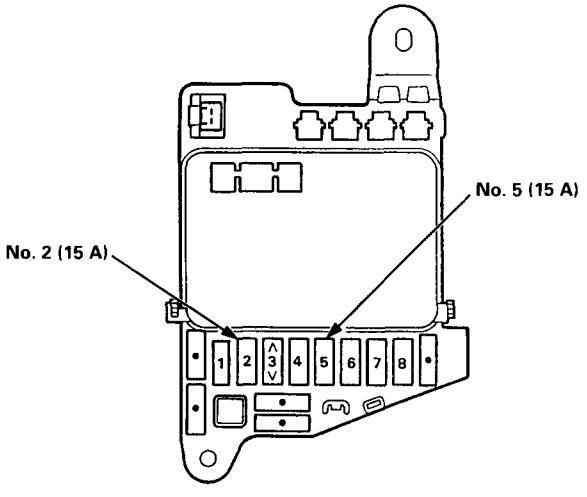

FUSE No.	FUSE LABEL NAME
2	FUEL PUMP/SRS2
5	BACK-UP LIGHTS/ALTERNATOR/TURN SIGNAL

EPS Control Unit Terminal Arrangement

18P CONNECTOR

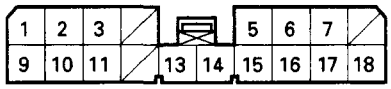

WIRE SIDE OF FEMALE TERMINALS

VB: Battery voltage
IG SW: Ignition switch

Terminal number	Wire color	Terminal sign/ Terminal name	Description	Voltage		
				Measurement terminals	Measurement Conditions With IG SW: ON (II)	Output voltage
1	YEL	IG1 (Ignition 1)	Detects ignition switch IG1 signal.	1-GND		VB
2	LT GRN/BLK	SPS (Sensor power supply)	Power source for torque sensor.	2-GND		Approx. 11 V
3	BLU/BLK	TRQ2 (Torque sensor 2)	Detects steering operation torque.	3-17	Turn to full right	Approx. 2.6 V
					Straight ahead	Approx. 2.8 V
					Turn to full left	Approx. 3.0 V
5	PNK/BLK	VSS2 (Vehicle speed sensor 2)	Detects vehicle speed signal. {Signal for TCM (AT) or PULSE UNIT (MT)} (50 Pulse/Rev)	5-GND	Raise the car off the ground and rotate the rear wheel	Approx. 4.7 V↔0 V Pulse
6	BLK	LG1 (Logic ground 1)	Ground for the EPS control unit control circuit.	6-GND		Below 0.3 V
7	PNK/BLU	WARN (Warning lamp)	Drives EPS indicator light (Shuts off the indicator light ground circuit inside the EPS control unit to turn off the light when the system is normal).	7-GND	Light ON	Below 1.5 V
					Light OFF	VB
9	WHT/YEL	VBU (Back-up voltage)	Power source for diagnostic trouble code memory.	9-GND	At all time	VB
10	GRN/YEL	TRQ3 (Torque sensor 3)	Detects steering operation torque (TRQ1+TRQ2).	10-17	Turn to full right	Approx. 5.0 V
					Straight ahead	Approx. 2.5 V
					Turn to full left	Approx. 0 V
11	LT GRN/ YEL	TRQ1 (Torque sensor 1)	Detects steering operation torque.	11-17	Turn to full right	Approx. 3.0 V
					Straight ahead	Approx. 2.8 V
					Turn to full left	Approx. 2.6 V
13	GRN/RED	VREF (Reference voltage)	Detects reference voltage for torque senser.	13-17		Approx. 2.5 V
14	BLU	SCS (Service check signal)	Detects service check connector signal (diagnostic trouble code indication).	14-GND	Connected	Below 0.3 V
					Disconnected	Approx. 4.8 V
15	ORN	VSS1 (Vehicle speed sensor 1)	Detects vehicle speed signal. (4 Pulse/Rev)	15-GND	Raise the car off the ground and rotate the rear wheel	Approx. 5.0 V↔0 V Pulse
16	BLK	LG2 (Logic ground 2)	Ground for the EPS control unit control circuits.	16-GND		Below 0.3 V
17	BLK/YEL	SG (Sensor ground)	Ground for the torque sensor.	17-GND		Below 0.3 V
18	WHT/BLU	CHG (Charg)	Detects engine operation (Activates EPS control unit with engine ON).	18-GND	Engine: OFF	Below 0.3 V
					Engine: ON	VB

3P CONNECTOR (LEFT SIDE)

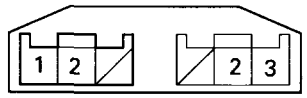

WIRE SIDE OF FEMALE TERMINALS

VB: Battery voltage
IG SW: Ignition switch

Terminal number	Wire color	Terminal sign/ Terminal name	Description	Voltage		
				Measurement terminals	Measurement Conditions With IG SW: ON (II)	Output voltage
1	WHT	+B (+Battery)	Power supply	1-GND	At all time	VB
2	RED	MTR1 (Motor 1)	Drive the motor with MTR1 and MTR2.	2-GND	Turn to full right	Approx. 5.5 V
					Straight ahead (do not move)	Approx. 0.04 V
					Turn to full left	Approx. 10.7 V

3P CONNECTOR (RIGHT SIDE)

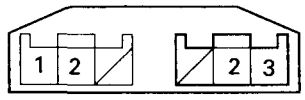

WIRE SIDE OF FEMALE TERMINALS

VB: Battery voltage
IG SW: Ignition switch

Terminal number	Wire color	Terminal sign/ Terminal name	Description	Voltage		
				Measurement terminals	Measurement Conditions With IG SW: ON (II)	Output voltage
2	BLK	PG (Power ground)	Ground	2-GND	At all time	0 V
3	BLU	MTR2 (Motor 2)	Drives the motor with MTR2 and MTR1.	3-GND	Turn to full right	Approx. 10.7 V
					Straight ahead (do not move)	Approx. 0.04 V
					Turn to full left	Approx. 5.5 V

6P CONNECTOR

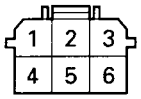

WIRE SIDE OF FEMALE TERMINALS

Terminal number	Wire colors		Terminal sign
	Sensor side	Control unit side	
1	ORN	LT GRN/BLK	SPS
2	WHT/GRN	LT GRN/YEL	TRQ1
3	WHT/RED	BLU/BLK	TRQ2
4	BLU	BLK/YEL	SG
5	YEL/GRN	GRN/YEL	TRQ3
6	YEL/BLK	GRN/RED	VREF

PULSE UNIT 7P CONNECTOR (MT)

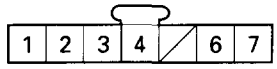

WIRE SIDE OF FEMALE TERMINALS

Terminal number	Wire colors	Terminal sign/ Terminal name
1	BRN/BLK	SH DIF (Shield DIF)
2	PNK/BLK	VSS2 (Vehicle speed sensor 2)
3	BLU/GRN	DIF1 (Differential speed sensor 1)
4	YEL	IG1 (Ignition 1)
6	BLU/YEL	DIF2 (Differential speed sensor 2)
7	BLK	GND (Ground)

Troubleshooting Precautions

EPS Indicator Light

Under normal conditions, the EPS indicator light in the gauge assembly comes on when the ignition switch is turned to the ON (II) position, then goes off after the engine is started. This indicates that the bulb and its circuits are operating correctly. If there is any trouble in the system, the EPS indicator light turns on during driving, and the power steering assist is turned off. When the EPS indicator light comes on, the control unit memorizes the DTC. In this case, the control unit does not activate the EPS system after the engine starts again but it keeps the EPS indicator light on.

Diagnostic Trouble Code (DTC)

- The lowest DTC is indicated first.
- The DTCs continue blinking until the ignition switch is turned off.
- The DTCs are erased from the control unit when the EPS control unit VBU power supply or connector is disconnected.
- The EPS system can be reset and the control unit's memory can be erased by disconnecting the CLOCK (7.5 A) fuse for more than ten seconds.

Self-diagnosis:

The CPU (central processing unit) controls the following when it detects a problem during self-diagnosis:

1. Turns the EPS indicator light ON to alert the driver.
2. Power assist stops, and normal manual steering operation resumes (except DTC 33).
3. The EPS control unit memorizes the diagnostic trouble code (DTC).
4. After the DTC is stored in the control unit, the CPU stops self-diagnosis.

Troubleshooting:

- Before starting the troubleshooting, clear the DTC by disconnecting the CLOCK (7.5 A) fuse for ten seconds or more, and test-drive the car. Check that the symptom of the trouble appears again, and then troubleshoot.
- When both EPS indicator light and A/T "D" indicator light come on, perform the A/T troubleshooting first.
- When the customer's reported problem cannot be verified in the car, ask the customer about the conditions when the EPS indicator light came ON, then test-drive the car under those conditions, if possible. If the EPS indicator light does not come ON during the test, check for loose connections or poor contacts at the connectors by wiggling the harness, etc.
- The connector terminal numbers are viewed from the wire side for the female terminals and from the terminal side for the male terminals.
- After the repair, test-drive the car and check that the EPS indicator light does not come ON again during the test. (Refer to the Symptom-to-System Chart for diagnostic period.)

Diagnostic Trouble Code (DTC) Indication

1. Connect the SCS service connector to the service check connector under the glove box.

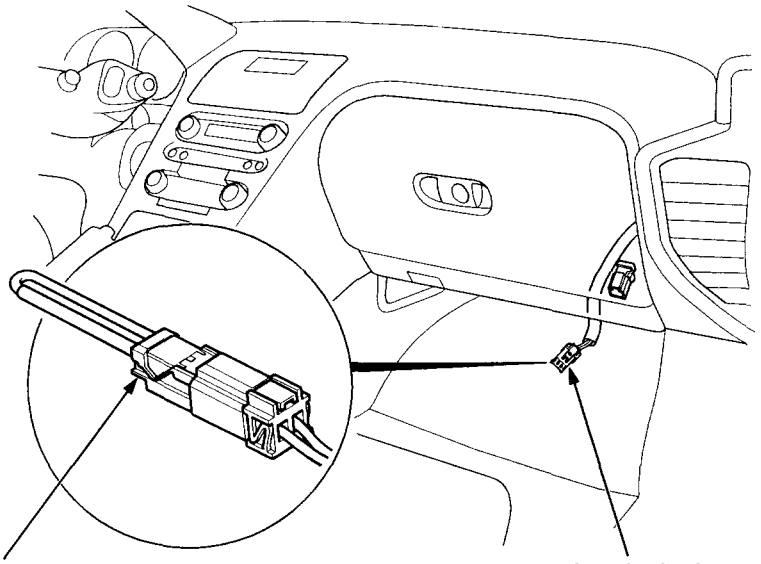

2. Turn the ignition switch ON (II), but do not start the engine.

3. Record the blinking frequency of the EPS indicator light. The blinking frequency indicates the diagnostic trouble code (DTC).

   NOTE: Check the DTC carefully and record it. The memory of the DTC is erased if the connector is disconnected from the EPS control unit.

GAUGE ASSEMBLY

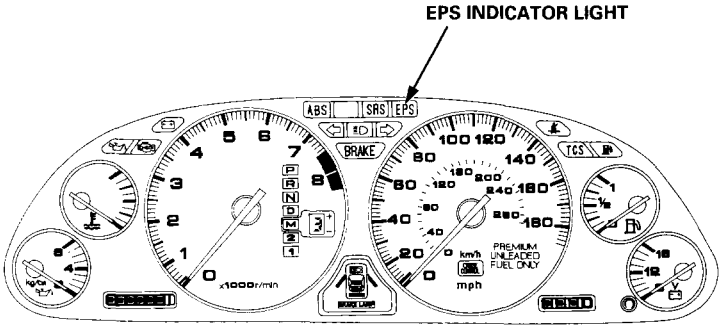

Diagnostic Trouble Code (DTC)

Symptom-to-System Chart

DIAGNOSTIC TROUBLE CODE (DTC)	EPS INDICATOR LIGHT	DISCRIPTION/SYMPTOM	DIAGNOSTIC PERIOD			AFTER DETECTING FOR SYSTEM	RESET	REFER TO PAGE
			INITIAL DIAGNOSIS	INDIVIDUAL DIAGNOSIS	REGULAR DIAGNOSIS		CLOCK (7.5 A) FUSE	
—	—	EPS indicator light does not come on when ignition switch is turned ON (II)				—		17-27
—	○	EPS indicator light does not go off after engine is started				System OFF		17-29
3	○	A problem with the current sensor offset	○			↑	○	17-36
4	○	A problem with the current sensor offset		○		↑	○	
5	○	A problem with the current sensor fixed		○		↑	○	
6	○	A problem with the current sensor fixed		○		↑	○	
11	○	A problem with the hight voltage or low voltage of the torque sensor (TRQ1 and TRQ2)		○		↑	○	17-31
12	○	A problem with the voltage for torque sensor (TRQ3)		○		↑	○	
13	○	A problem with average of voltage on TRQ1 and TRQ2		○		↑	○	
14	○	A problem with the 2.5 V reference voltage (VREF)		○		↑	○	
21	○	A problem with the circuit for input motor voltage in the EPS control unit	○	○		↑	○	17-36
22	○	A problem with the lower current			○	↑	○	
23	○	A problem with the circuit for check function in the EPS control unit	○	○	○	↑	○	
24	○	The fail safe relay or the power relay is stuck ON	○			↑	○	
25	○	The lower FET is stuck ON	○			↑	○	
26	○	The upper FET is stuck ON	○			↑	○	
31	○	A problem with the voltage for IG1	○	○		↑	○	—
33	○	A problem with average for VSS1 and VSS2			○	System ON	○	17-38
34	○	A problem with the CPU in the EPS control unit	○	○	○	System OFF	○	Replace the EPS control unit

- Initial diagnosis: Performed right after the engine starts until the EPS indicator light goes off.
- Regular diagnosis: Continuously performed (under some conditions) after the EPS indicator light goes off until the engine stops.
- Individual part/system diagnosis: Diagnoses a specific part/system under its operating conditions.
- CPU: Central Processing Unit.

Hard Steering

Steering is heavy.

Start the engine and check the EPS indicator light.

Does the EPS indicator light come on?

YES → **Refer to the Symptom-to-System Chart (see page 17-25).**

NO

Check the tire pressure and front wheel alignment.

Are they normal?

NO → **Correct the air pressure or wheel alignment.**

YES

Check the power assist with the car parked:

1. Park the vehicle on a level surface with the wheels pointing straight ahead.
2. Measure the steering wheel turning force. Refer to the chart on the right.

Power Assist Check with Car Parked:

Connect a spring scale to the steering wheel and turn the wheel. Read the measurement when the front wheels start to move.

Condition	Steering wheel turning force
Without power assist (engine off)	120 N (12 kgf, 26 lbf) maximum
With power assist (engine running)	42 N (4.2 kgf, 9.3 lbf) maximum

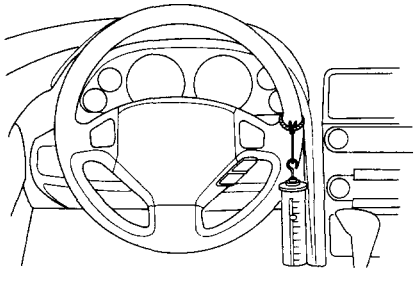

Is it within specification?

NO → **Check for loose the EPS control unit connectors or poor contact of terminals, and inspect the mechanical steering system:**

YES

EPS system is OK.

Inspection

Steering Wheel Rotational Play

1. Place the front wheels in a straight ahead position, and measure the distance the steering wheel can be turned without moving the front wheels.
2. If the play exceeds the service limit, check all steering components.

Service Limit: 5 mm (0.2 in) maximum

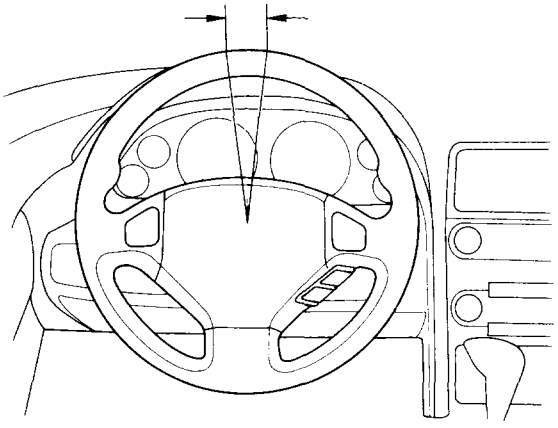

Power Assist Check With Vehicle Parked

Turn the steering wheel with a spring scale. Read the measurement when the front wheels or steering wheel start to move.

Operation Standard

Condition	Stationary Swing operation load
Without power assist (engine off)	118 N (12 kgf, 26 lbf) maximum
With power assist (engine running)	41 N (4.2 kgf, 9.3 lbf) maximum

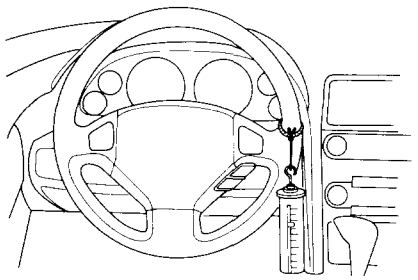

Steering Gearbox Adjustment

⚠ WARNING Serious burns may result if you touch any cooling components when the cooling system is hot.

1. Loosen the rack guide screw locknut.

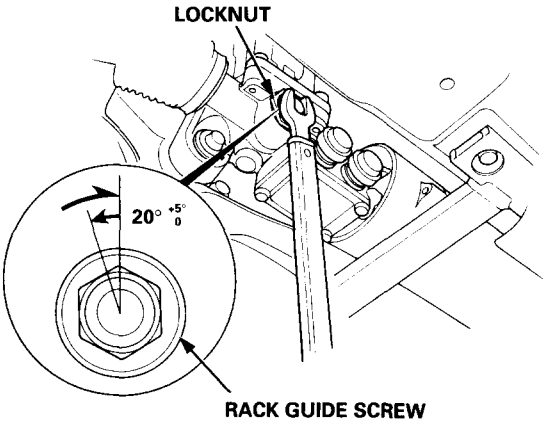

2. Tighten, loosen and retighten the rack guide screw two times to 4 N-m (0.4 kgf-m, 2.9 lbf-ft), then back it off 20° +5° 0
3. Tighten the locknut on the rack guide screw with the special tool.

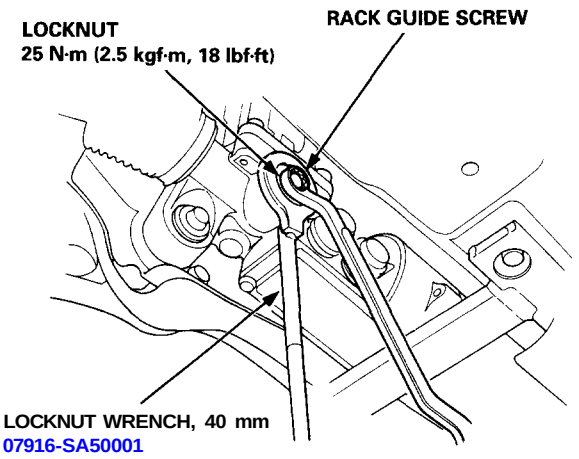

4. Check for tight or loose steering through the complete turning travel.
5. Recheck steering assist.

Steering Wheel

Removal

Airbag Removal

⚠ WARNING Store a removed airbag assembly with the pad surface up. If the airbag is improperly stored face down, accidental deployment could propel the unit with enough force to cause serious injury.

NOTE: Before removing the steering wheel, make sure the front wheels are straight ahead.

SRS components are located in this area. Review the SRS component locations, precautions, and procedures in the SRS (section 24) before performing repairs or service.

1. Disconnect both the negative cable and positive cable from the battery.
2. Remove the access panel from the steering wheel lower cover, then remove the short connector.
3. Disconnect the connector between the airbag and cable reel.
4. Connect the short connector to the airbag 3P connector.

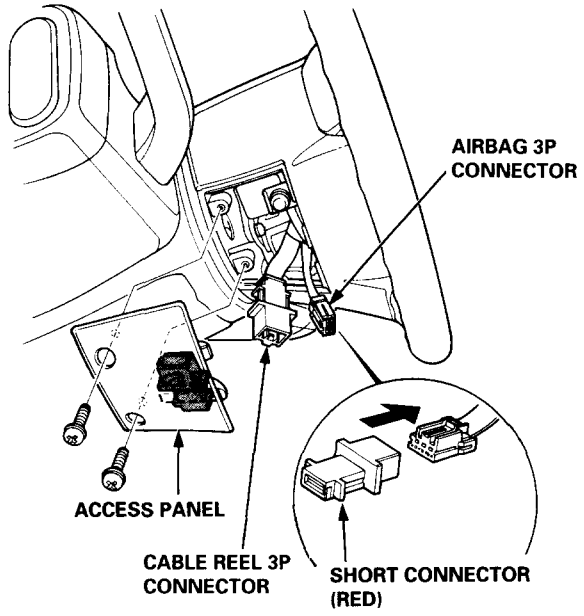

5. Remove the Torx bolts using a Torx T30 bit, then remove the driver's airbag assembly.

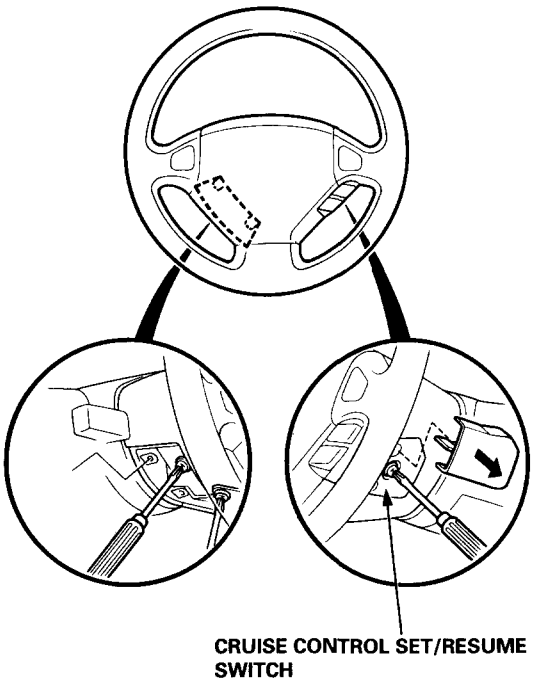

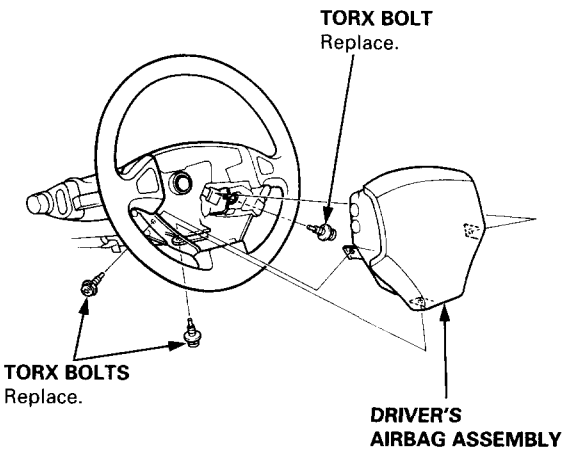

(cont'd)

Removal (cont'd)

7. Disconnect the connectors from the horn and cruise control set/resume switches, then remove the cable reel 3P connector from its clips.

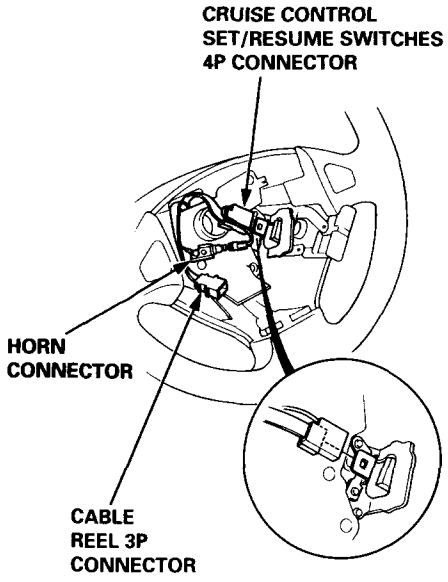

8. Remove the steering wheel nut.

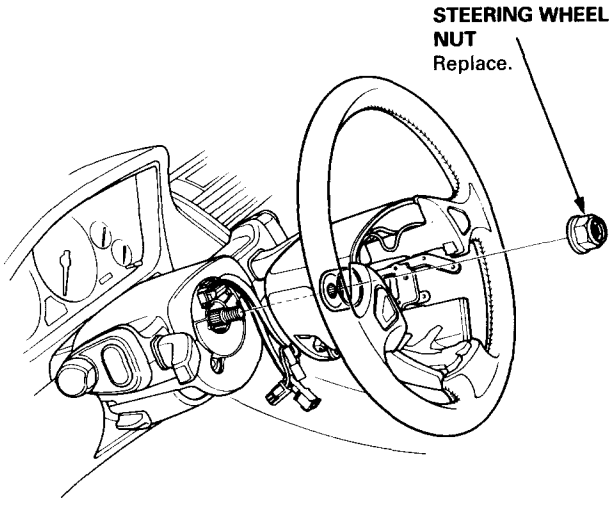

9. Remove the steering wheel by rocking it slightly from side-to-side as you pull steadily with both hands.

Steering Wheel

Disassembly/Reassembly

⚠ WARNING Store a removed airbag assembly with the pad surface up. If the airbag is improperly stored face down, accidental deployment could propel the unit with enough force to cause serious injury.

NOTE: If an intact driver's airbag assembly has been removed from a scrapped vehicle or has been found defective or damaged during transit, storage or service, it should be deployed (see section 24).

CAUTION:

- **Carefully inspect the driver's airbag assembly before installing. Do not install an driver's airbag assembly that shows signs of being dropped or improperly handled, such as dents, cracks or deformation.**
- **Always keep the short connector on the airbag 3P connector when the harness is disconnected.**
- **Do not disassemble or tamper with the driver's airbag assembly.**

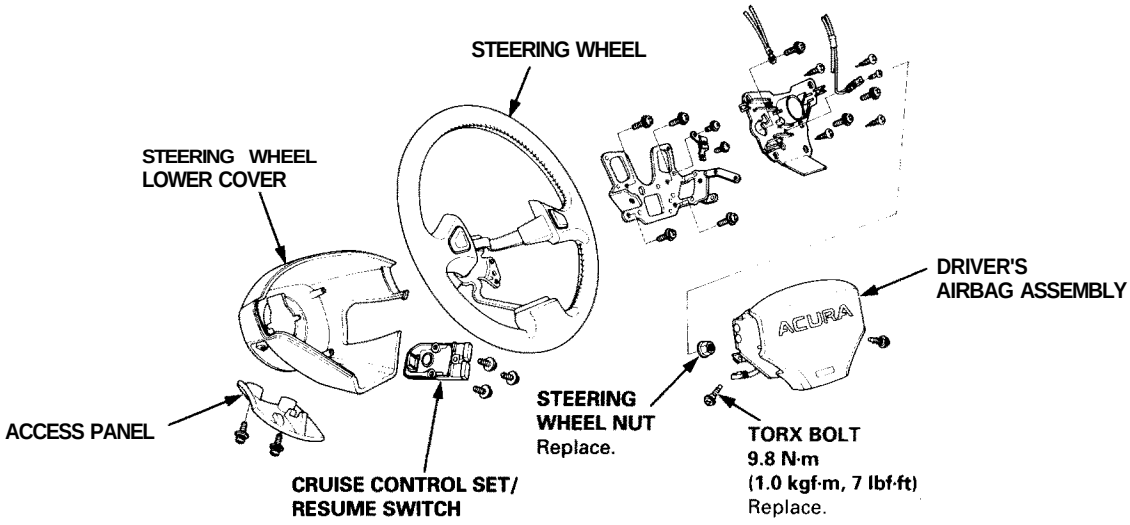

Installation

NOTE: Before installing the steering wheel, make sure the front wheels are straight ahead.

CAUTION:
- **Be sure to install the harness wires so that they are not pinched or interfering with other car parts.**
- **Do not replace the original steering wheel with any other design, since it will make it impossible to properly install the airbag. (Use only genuine Honda replacement parts.)**
- **After reassembly, confirm that the wheels are still straight ahead and that steering wheel spoke angle is correct. If minor spoke angle adjustment is necessary, adjust the tie-rods only. Do not remove and reposition the steering wheel.**

⚠ WARNING Confirm that the driver's airbag assembly is securely attached to the steering wheel; otherwise, severe personal injury could result during later airbag deployment.

1. Before installing the steering wheel, center the cable reel.
   Do this by first rotating the cable reel clockwise until it stops.
   Then rotate it counterclockwise (approximately two turns) until:
   — The yellow gear tooth lines up with the mark on the cover.
   — The arrow on the cable reel label points straight up.

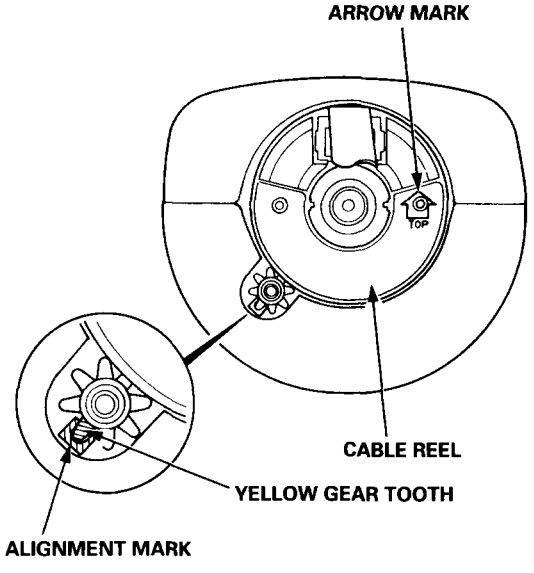

2. Install the steering wheel.

   NOTE: Be sure the steering wheel shaft engages the cable reel.

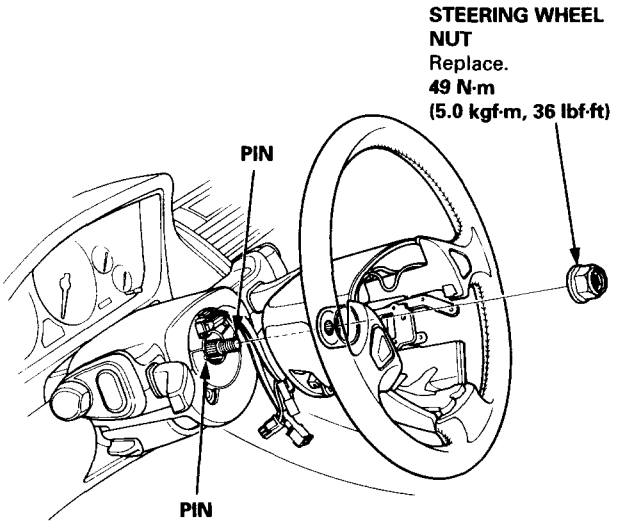

3. Attach the cruise control set/resume switches 4P connector to the steering wheel clips.

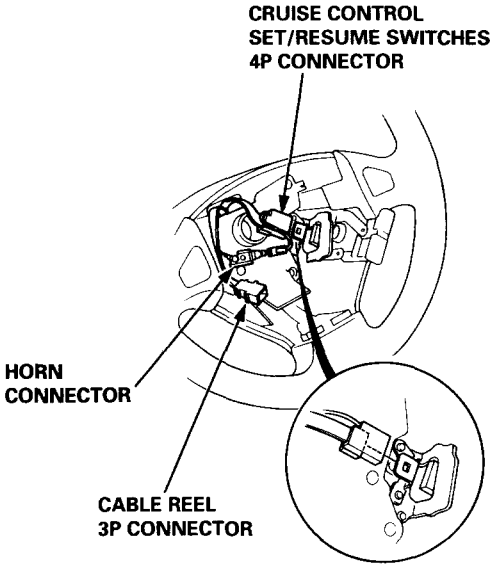

4. Connect the horn connector.

(cont'd)

Steering Wheel

Installation (cont'd)

5. Install the airbag assembly with new Torx bolts.

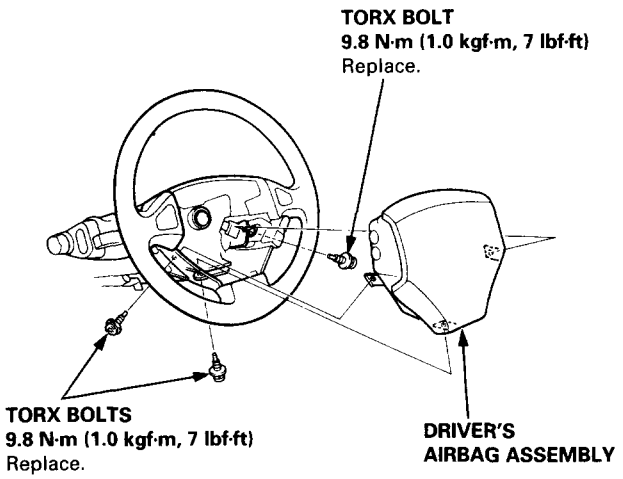

6. Disconnect the short connector from the airbag 3P connector.

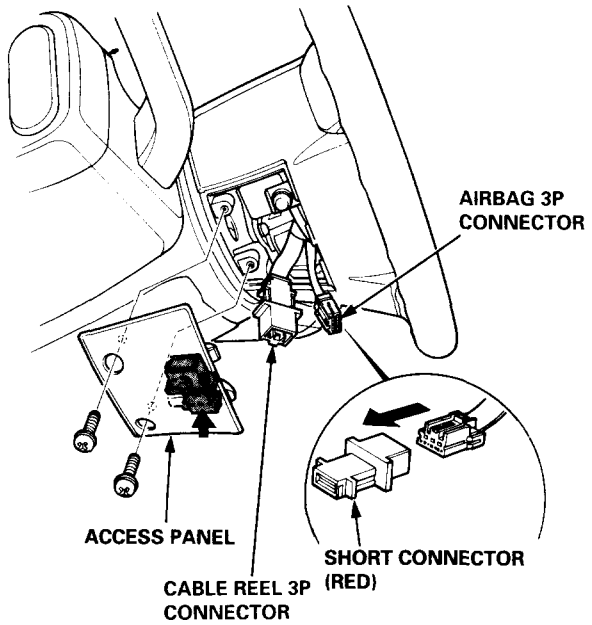

7. Connect the airbag 3P connector and cable reel 3P connector.

8. Attach the short connector to the access panel, then install the access panel on the steering wheel lower cover.

9. Connect the battery positive terminal, and then connect the negative terminal.

10. After installing the airbag assembly, confirm proper system operation:
    - Turn the ignition to II: the instrument panel SRS indicator light should come on for about six seconds and then go off.
    - Confirm operation of horn buttons.
    - Confirm operation of cruise control set/resume switch.
    - Turn the steering wheel counterclockwise and make sure the yellow gear tooth still lines up with the alignment mark.

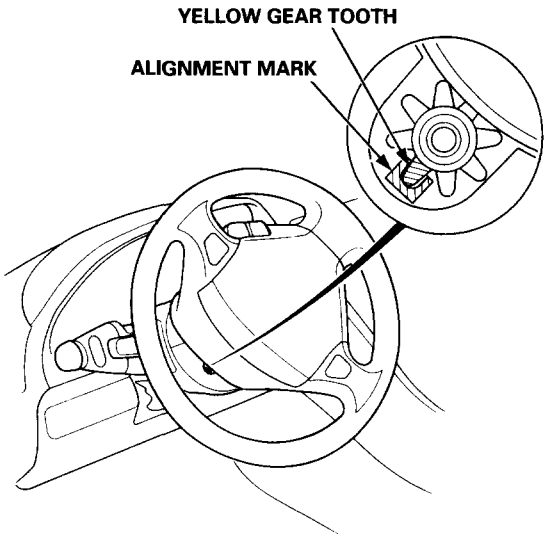

Removal

SRS components are located in this area. Review the SRS component locations, precautions, and procedures in the SRS (section 24) before performing repairs or service.

1. Disconnect both the negative cable and positive cable from the battery.
2. Remove the driver's airbag assembly and steering wheel from the column (see page 17-43).
3. Remove the dashboard lower panel, dashboard lower pad, and dashboard brace.

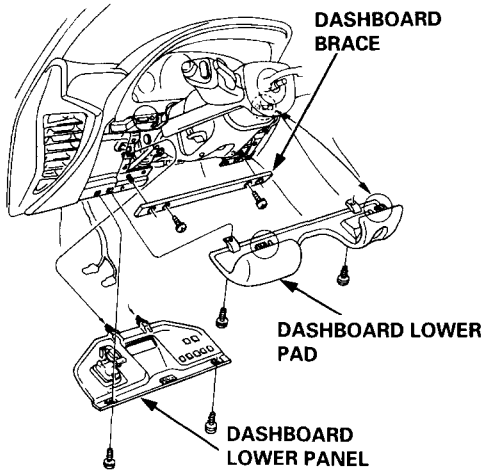

4. Disconnect the connector between the cable reel and the SRS main harness, then remove the connector holder.
5. Remove the column lower panel.

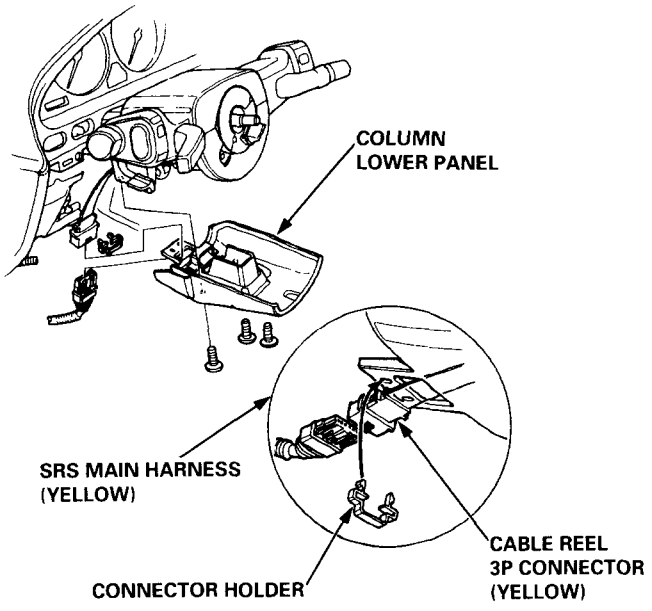

6. Remove the column covers.

NOTE: Be careful not to damage the column covers.

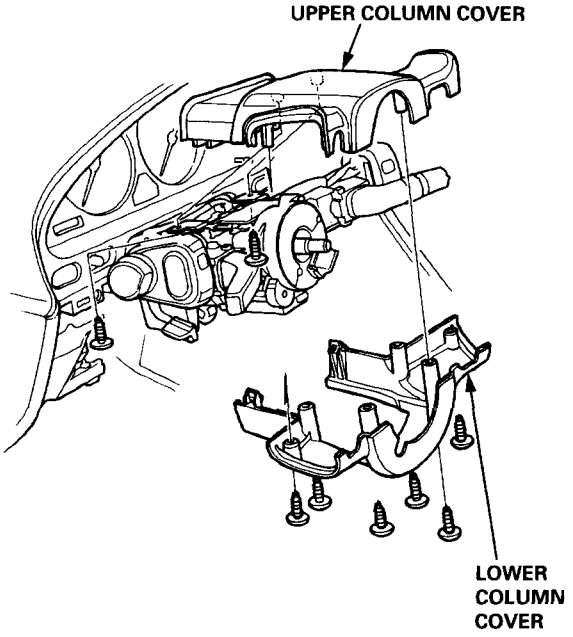

7. Disconnect the TCS sensor connector.

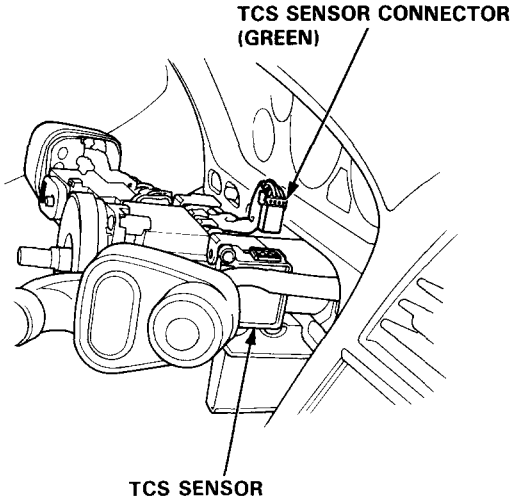

(cont'd)

Removal (cont'd)

8. Remove the combination switch assembly from the column shaft.

   NOTE: The combination switch can be removed by disconnecting only the TCS sensor connector.

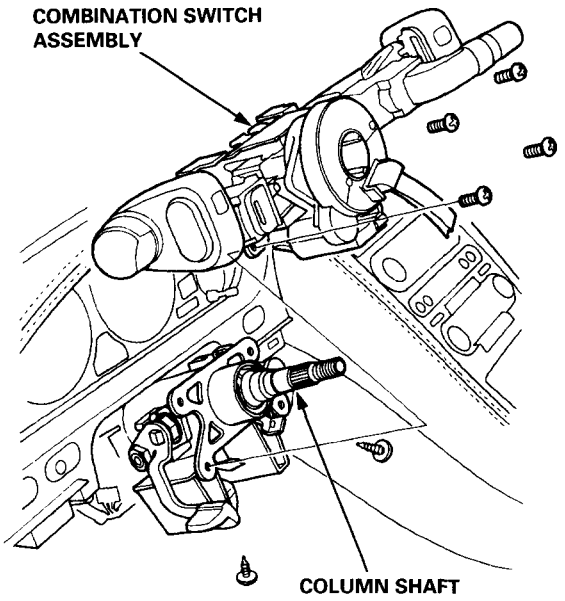

9. Remove the steering joint cover.

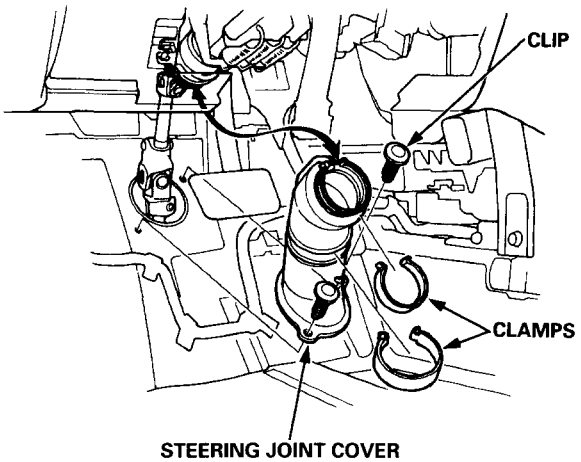

10. Remove the steering joint bolts and toothed lock washers from the steering joint.

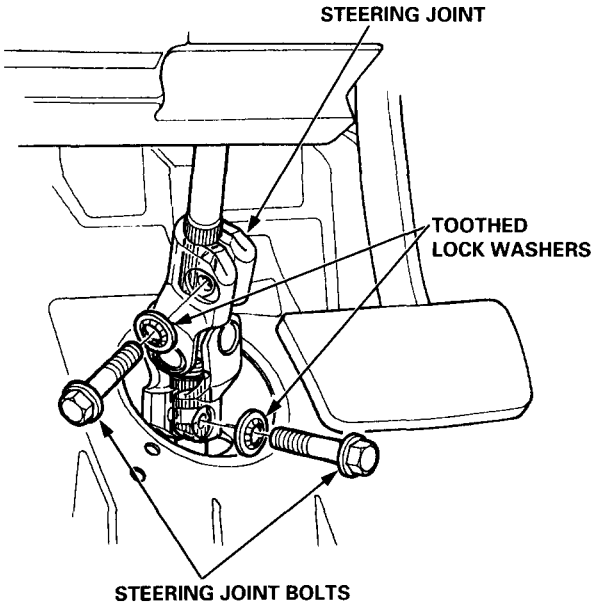

11. Disconnect the ignition switch connectors and remove the column holder, then remove the steering column assembly by removing the 8 mm bolts and flange nuts.

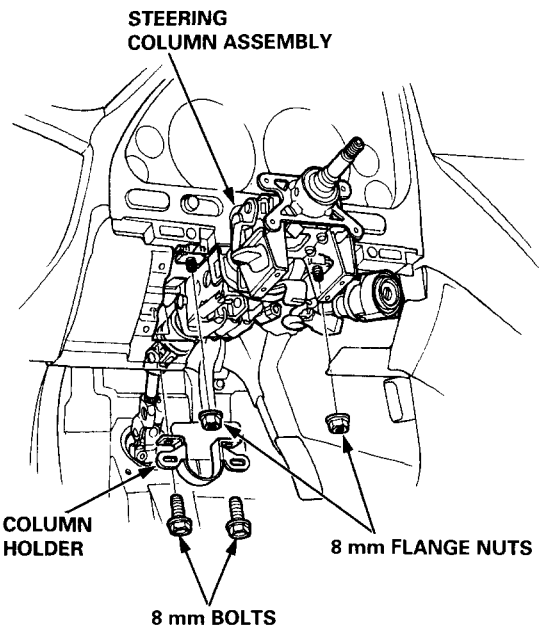

Inspection

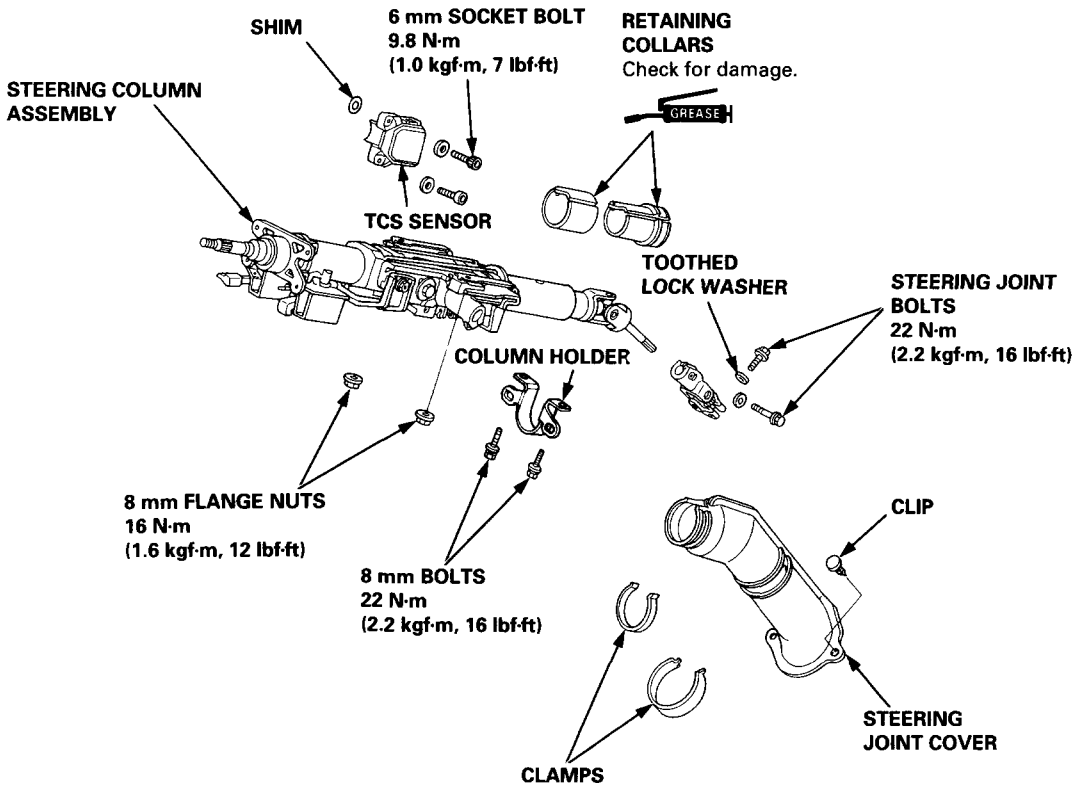

NOTE:

- Check the telescopic mechanism, tilt mechanism, and steering joint bearings or steering shaft for movement and damage. Replace as an assembly if damaged or faulty.
- If either the steering column assembly or TCS sensor is removed, select the appropriate shim and adjust the distance between the steering shaft and TCS sensor. Refer to Section 19 for shim selection.

Attach a spring scale to the knob of the telescopic lever. Measure the force required to move the lever.

Preload: 70 - 90 N (7 - 9 kgf, 15 - 20 lbf)

If the force measured is not within the specification, loosen the locknut, then turn the telescopic adjusting bolt until the correct force can be obtained.

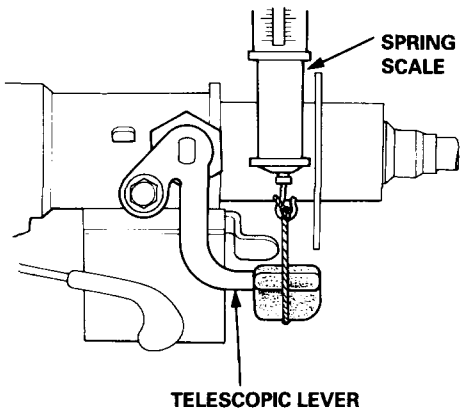

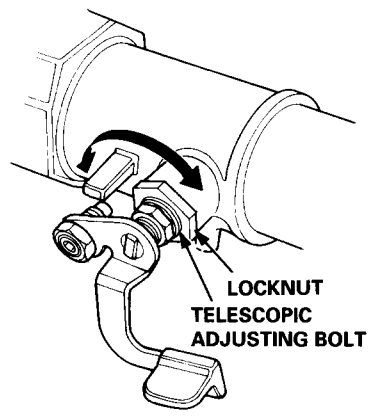

Installation

SRS components are located in this area. Review the SRS component locations, precautions, and procedures in the SRS (section 24) before performing repairs or service.

1. Slip the lower end of the steering joint onto the pinion shaft.

2. Reposition the column assembly on the hanger bracket, and loosely tighten with 8 mm flange nuts.

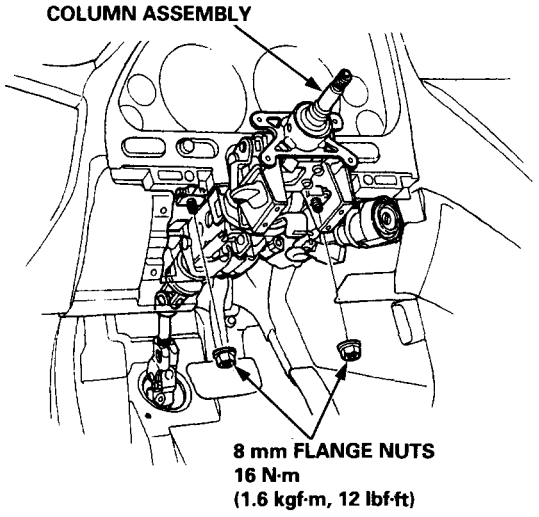

3. Tighten to the steering joint bolts.
   NOTE:
   - Be sure that the lower bolt is securely in the groove in the steering gearbox pinion shaft.
   - Be sure the pinion shaft and the steering column shaft are aligned; the joint should slip on freely. If not reposition the steering rack to correct the misalignment.

STEERING JOINT
Slip the upper end of the steering joint onto the steering shaft (line up the bolt hole with the groove around the shaft) and loosely install the upper bolt.

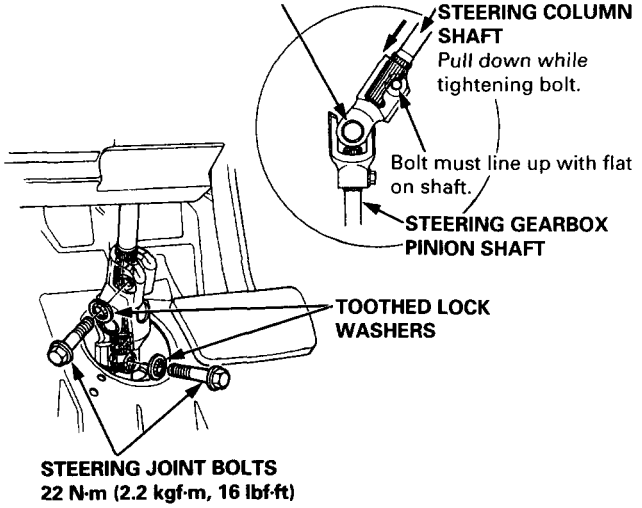

4. Install the column holder with the 8 mm bolts.

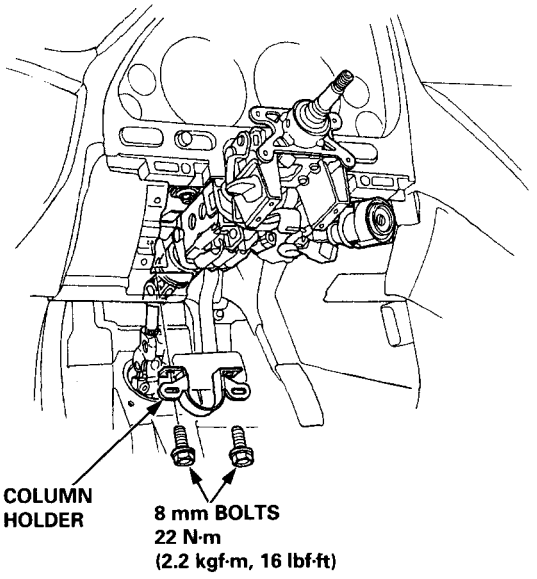

5. Tighten the 8 mm flange nuts to the specified torque.

6. Install the steering joint cover with the clamps and clips.

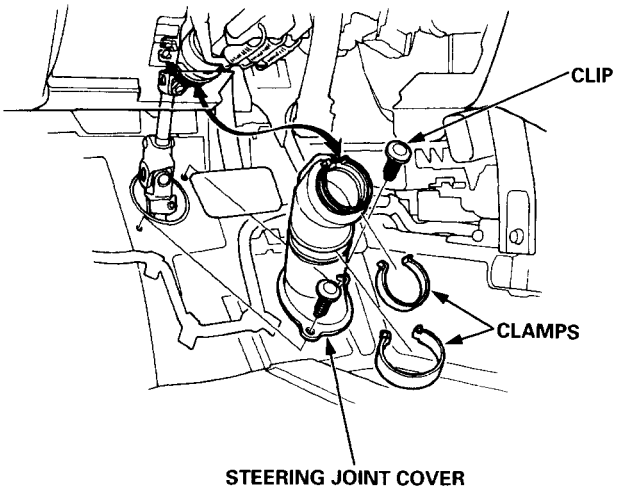

7. Install the combination switch assembly over the column shaft.

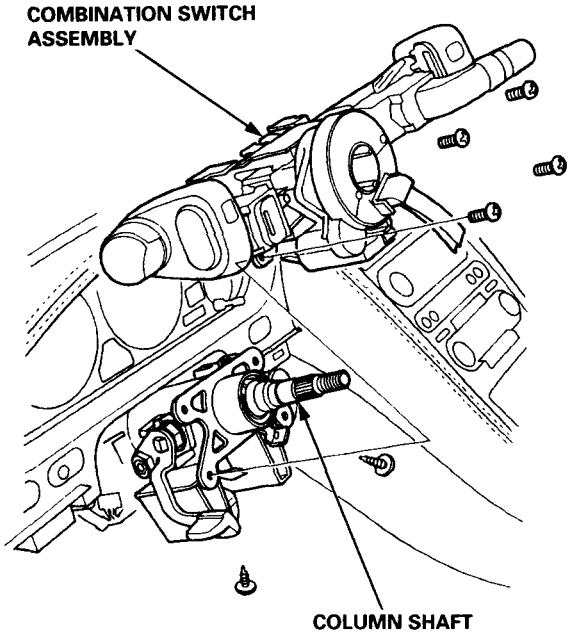

8. Reconnect TCS sensor connector.

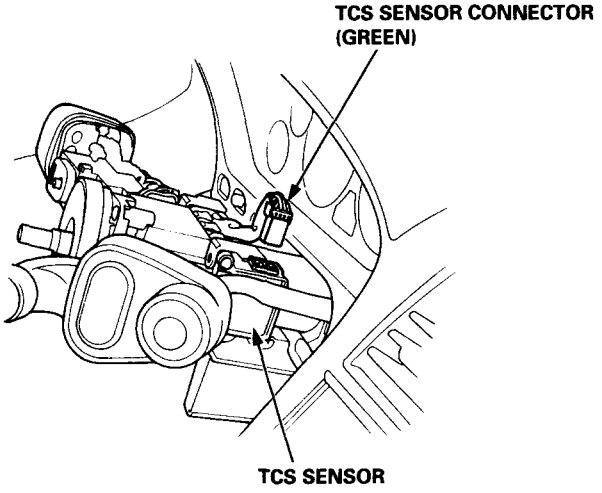

9. Install the column covers.

NOTE: Be careful not to damage the column covers.

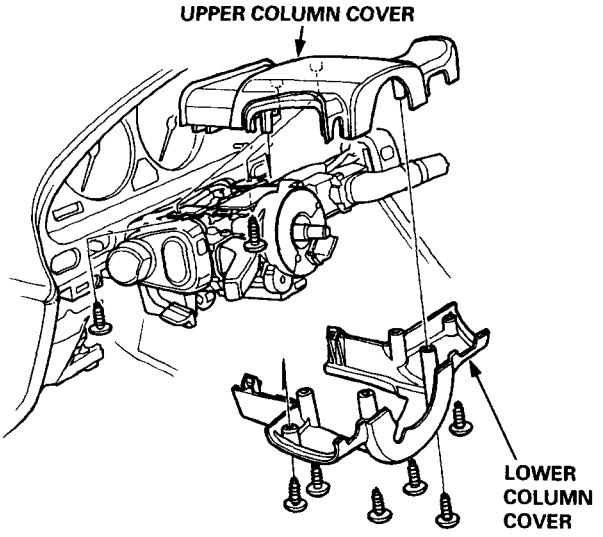

10. Insert the cable reel 3P connector through the column lower panel, and attach it to the column lower panel with the connector holder. Then connect the SRS main harness and cable reel 3P connector.

11. Install the column lower panel.

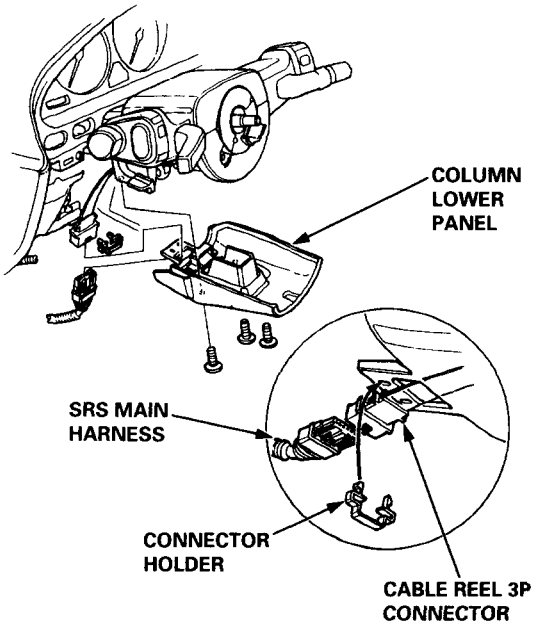

(cont'd)

Installation (cont'd)

12. Install the dashboard brace and dashboard lower pad.

13. Connect the foot well light harness and light-on warning chime to the dashboard lower panel, then install the dashboard lower panel.

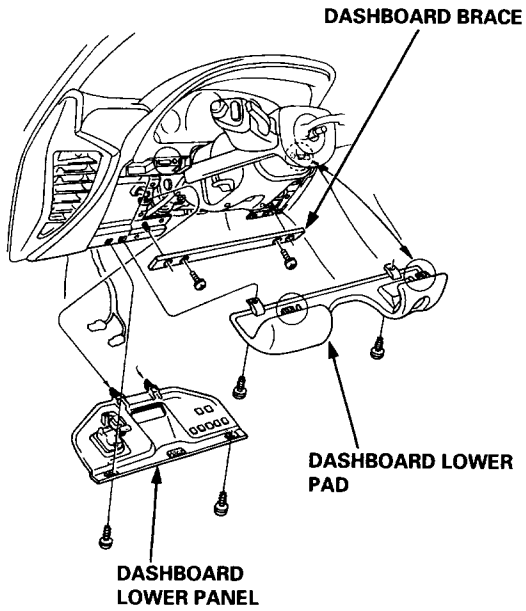

14. Install the steering wheel and driver's airbag assembly to the column (see page 17-45).

Steering Gearbox

Removal/Installation

NOTE: Before removing the steering gearbox, make sure the front wheels are straight ahead.

1. Remove the steering joint cover.

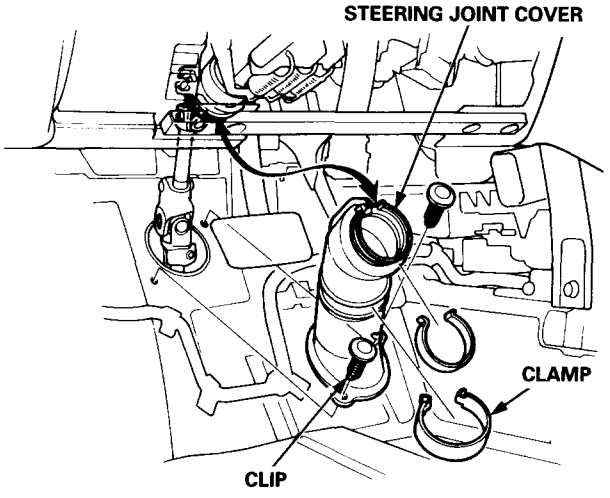

2. Remove the steering joint bolts, and disconnect the steering joint by moving the joint toward the column.

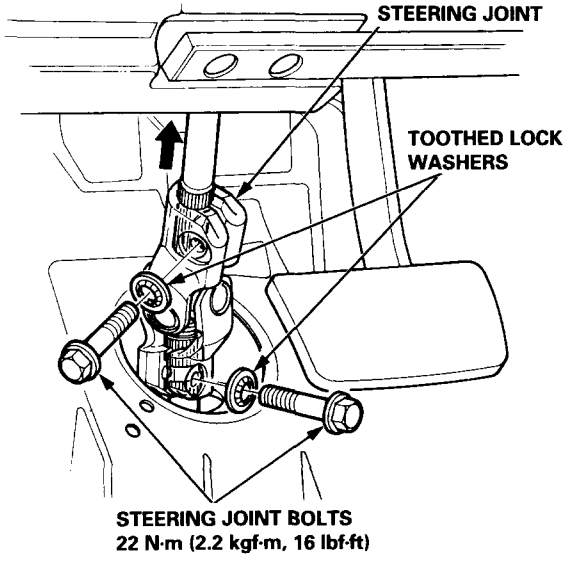

3. Lock the steering shaft with ignition key to keep the steering shaft position.

4. Raise the front of the vehicle, and place safety stands in the proper locations (see section 1).

5. Remove the front wheels.

6. Remove the cotter pin from the castle nut, and remove the nut.

7. Install the 10 mm hex nut on the ball joint. Be sure that the 10 mm hex nut is flush with the ball joint pin end, or the threaded section of the ball joint pin might be damaged by the ball joint remover.
NOTE: Remove the ball joint using the ball joint remover, 28 mm. Refer to page 18-21 for how to use the ball joint remover.

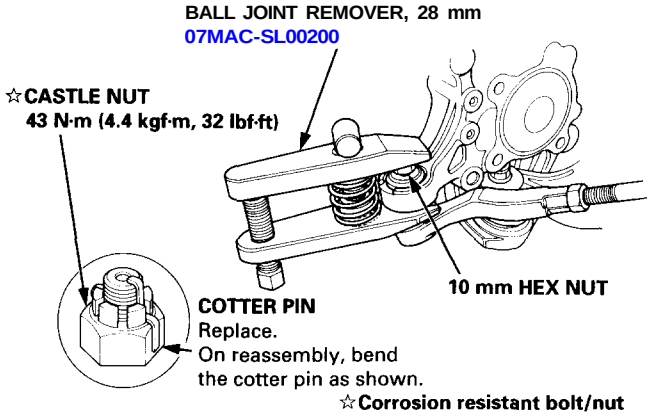

8. Separate the tie-rod ball joint and knuckle using the special tool.
CAUTION: Avoid damaging the ball joint boot.
NOTE: If necessary, apply penetrating type lubricant to loosen the ball joint.

9. Remove the folding spare tire and spare tire holder plate.

10. Disconnect the battery negative terminal, then disconnect the positive terminal and remove the battery.

11. Remove the spare tire holder and floor under cover.

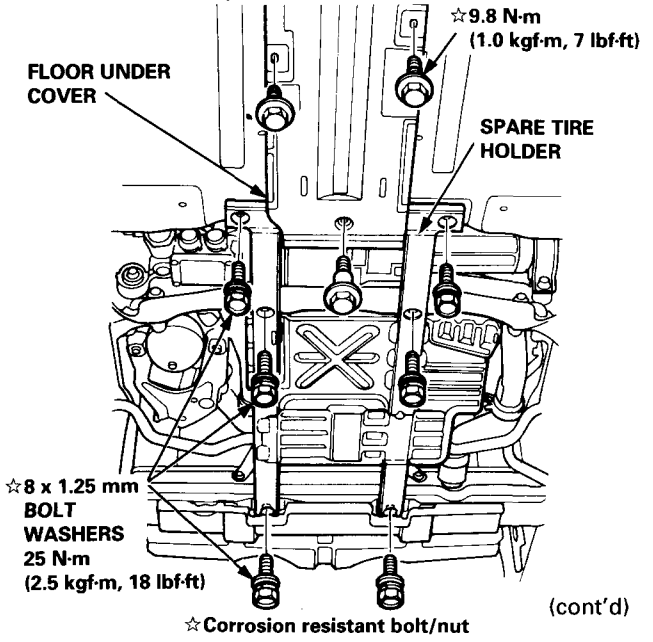

(cont'd)

Removal/Installation (cont'd)

12. Disconnect the connectors from the EPS wire harness.

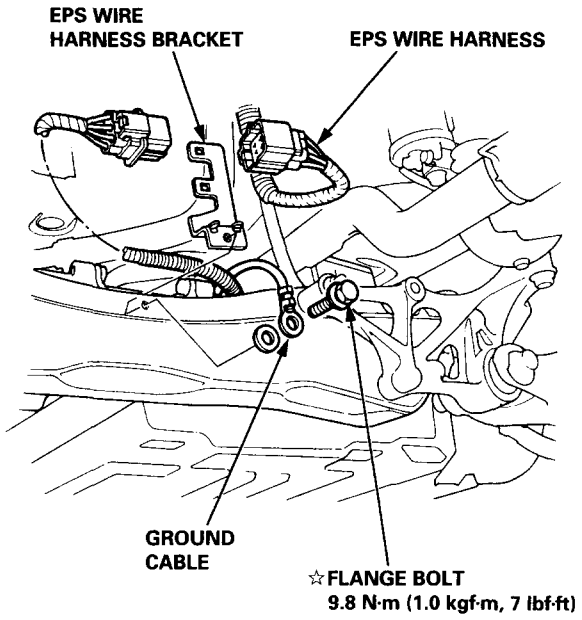

13. Remove the ground cable by removing the EPS wire harness bracket.

14. Remove the terminal guard and ground cable.

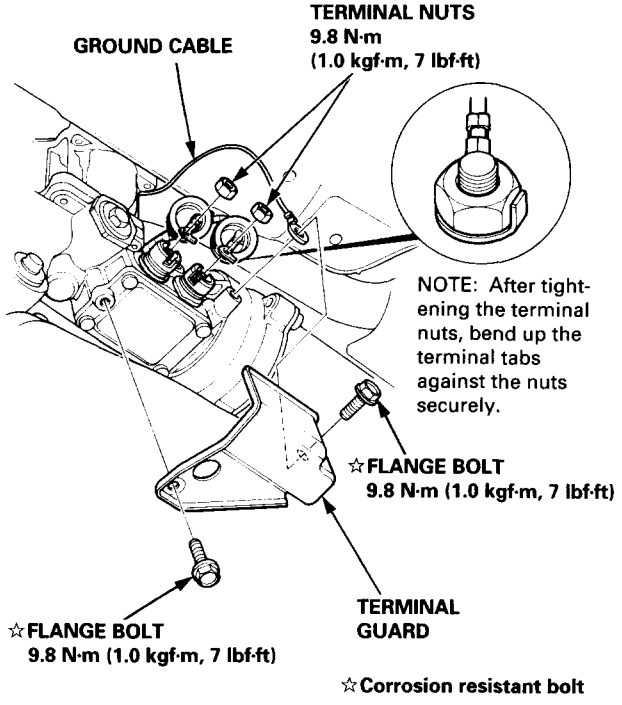

15. Remove the terminal nuts and the wires from the gearbox terminals.

16. Remove the radiator pipe bracket at the front compartment bulkhead.

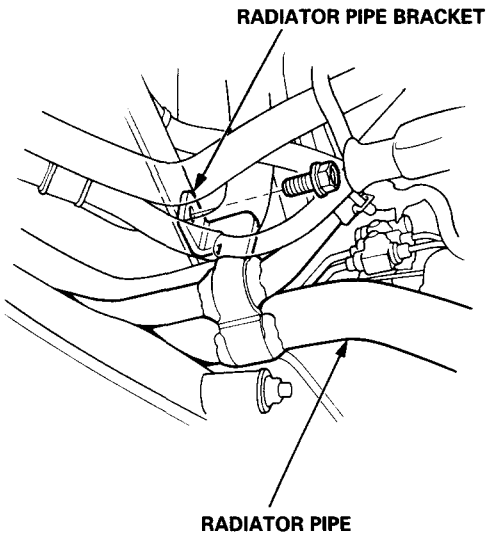

17. Remove the radiator pipe bracket at the floor, and space the radiator pipe away from and gearbox.

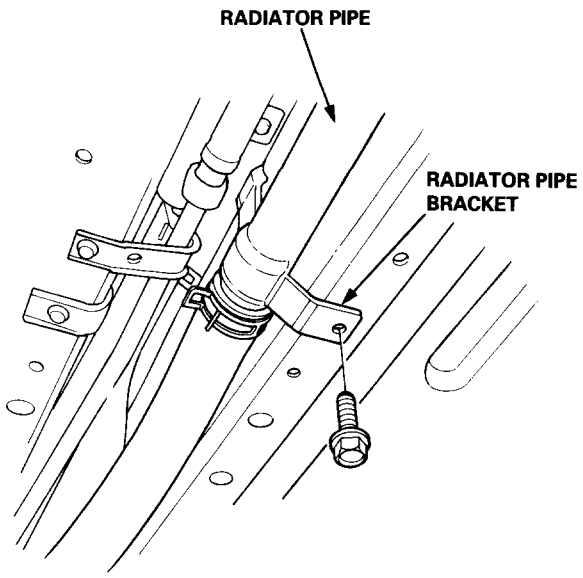

NOTE: Before removing the gearbox, place a stand jack under the gearbox and front crossbeam to lightly support them. Lower the gearbox together with the front crossbeam.

18. Remove the flange bolts and nuts of the gearbox and front crossbeam.

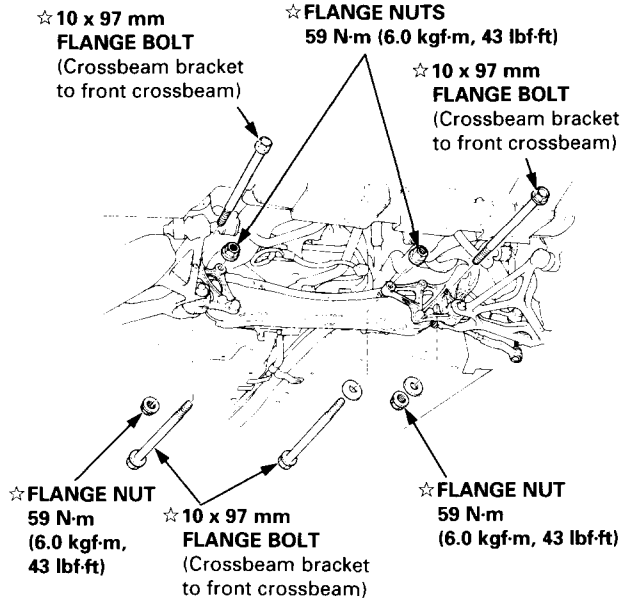

LEFT SIDE:

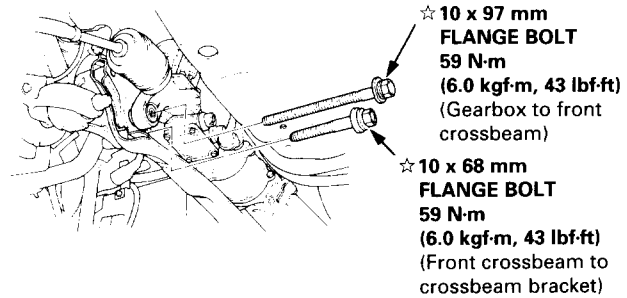

RIGHT SIDE:

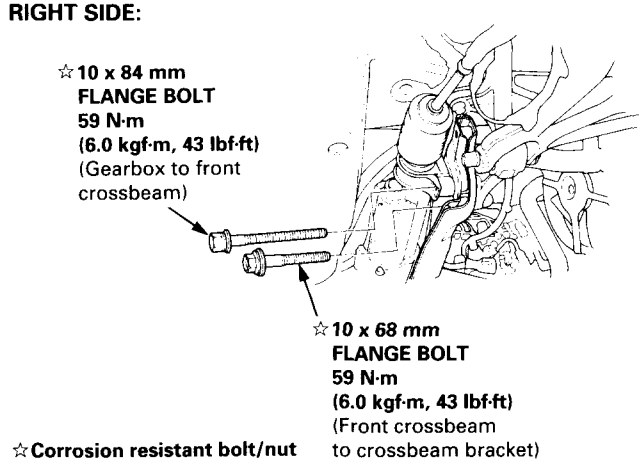

☆Corrosion resistant bolt/nut

19. Lower the gearbox and front crossbeam with care so as not to hit or damage the radiator pipe.

NOTE: The crossbeam is attached to the crossbeam bracket with locating pins. Remove the crossbeam by lightly taping on it with a plastic hammer, then remove the gearbox.

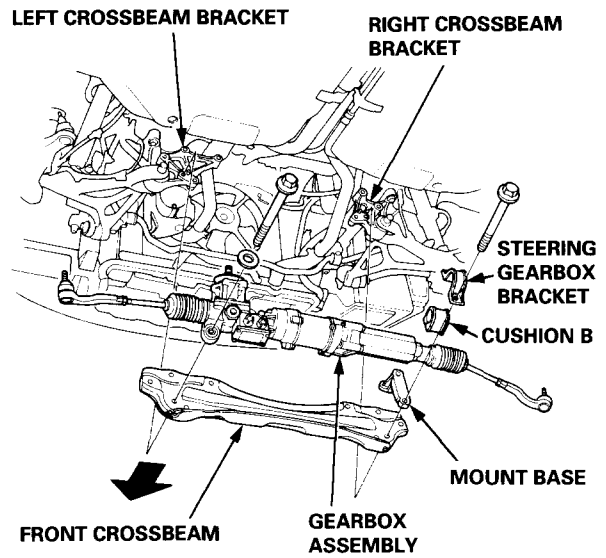

20. When installing the crossbeam to the crossbeam bracket, be sure to align the holes in the crossbeam with the locating pins on the crossbeam bracket.

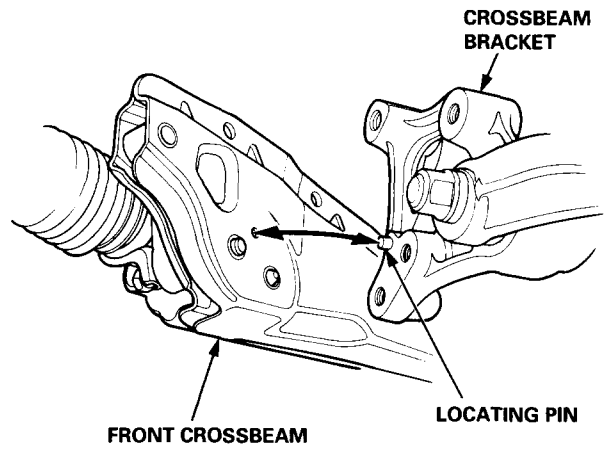

(cont'd)

Removal/Installation (cont'd)

21. Install the gearbox in the reverse order of removal.

    NOTE: When connecting the steering joint, make sure that the cable reel of airbag system is centered.

22. Set the steering rack in the center of its stroke.

23. Center the cable reel as follows:
    Turn the steering wheel left approx. 150 degrees to check the cable reel position with indicator.
    If the cable reel is centered, the yellow gear tooth lines up with the alignment mark on the cover.
    Return the steering wheel right approx. 150 degrees to position the steering wheel in the straight ahead position.

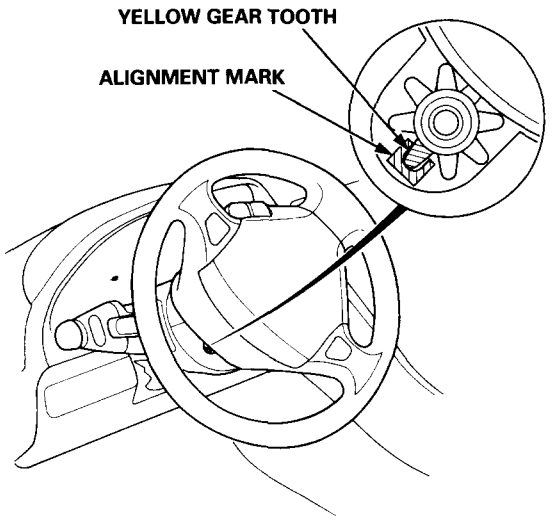

24. Slip the lower side of the steering joint onto the pinion shaft (line up the bolt hole with the groove around the shaft) and loosely install the lower bolt.

    NOTE:
    - Be sure that the lower steering joint bolt is securely in the groove in the steering gearbox pinion.
    - If the steering wheel and rack are not aligned centered, reposition the serrations at lower side of the steering joint.

25. Adjust the front toe after installing the gearbox (see section 18).

Steering Gearbox

Illustrated Index

CAUTION: Do not try to disassemble the power steering gearbox. If the gearbox is faulty, replace it as an assembly.

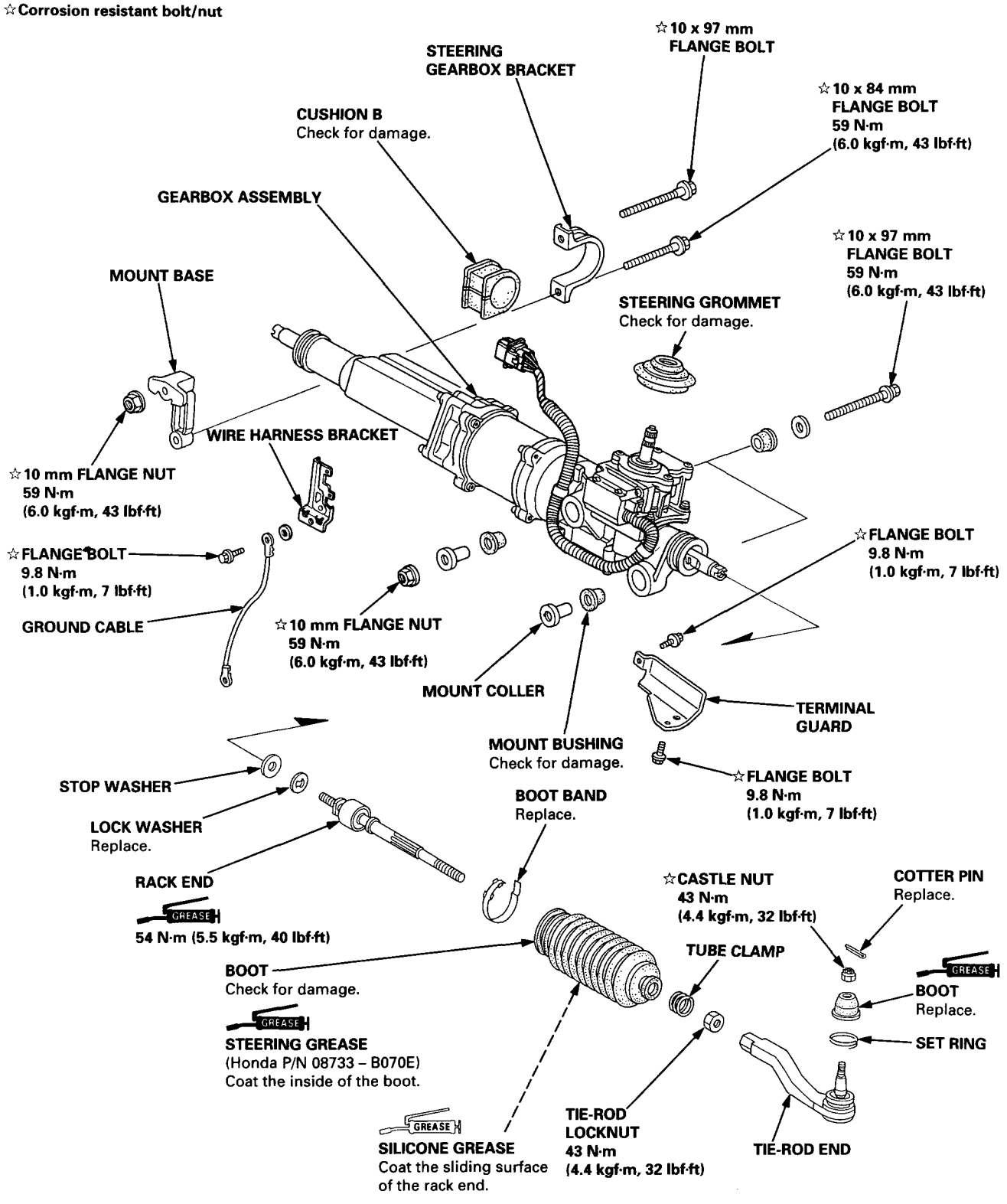

Inspection

1. Carefully clamp the gearbox in a vise with soft jaws.
2. Remove the boot bands.

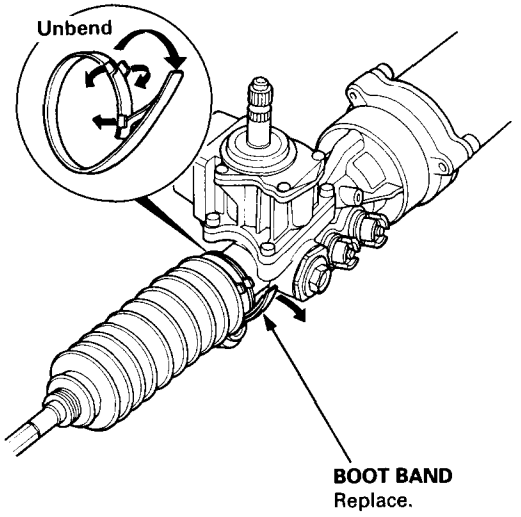

3. Pull the boots away from the ends of the gearbox, then unbend the tie-rod lock washers.

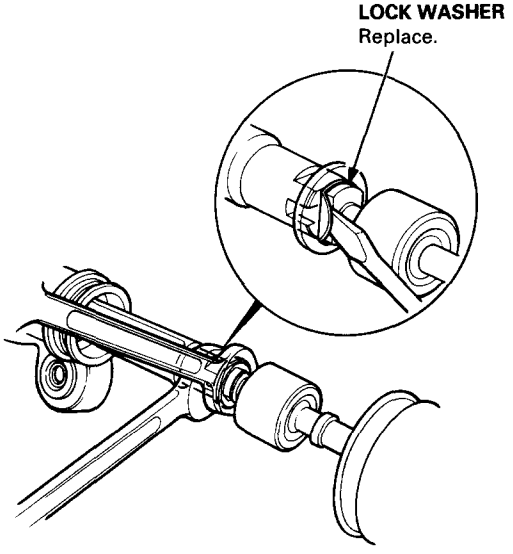

4. Hold the rack with a wrench, and unscrew the tie-rods with another wrench.

- Preload inspection:

  Slide the steering rack in the cylinder until the end of the rack projects 60 mm (2.4 in) from the cylinder end. Inspection is made near this rack position.

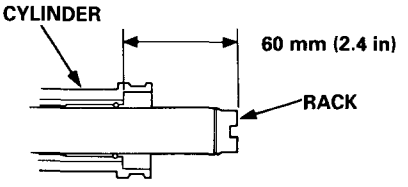

  Install the special tool on the pinion shaft and check the preload with a spring scale.
  If the preload is out of the specification, adjust the rack guide.

  Preload 29 N (3 kgf, 6.6 lbf) maximum

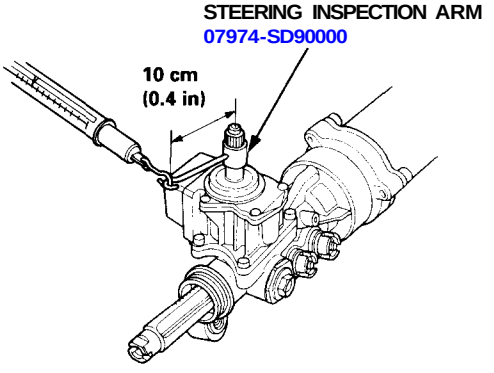

- Rack guide screw adjustment:
  — Loosen the rack guide screw locknut.
  — Tighten, loosen and retighten the rack guide screw two times to 4 N-m (0.4 kgf-m, 2.9 lbf-ft), then back it off $20^{\circ}\ ^{+5^{\circ}}_{0}$.

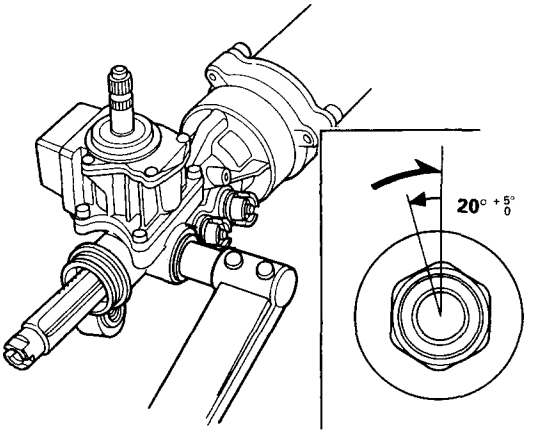

— Retighten the locknut while holding the rack guide screw with a wrench.

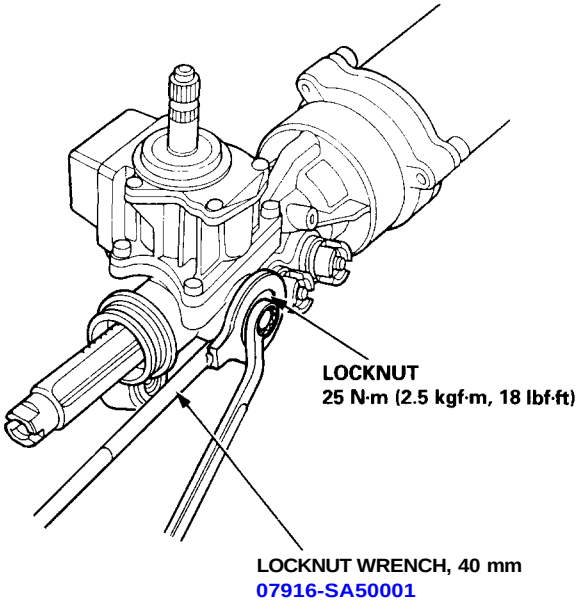

Tie-rod installation:

5. Screw each rack end into the rack while holding the lock washer so its tabs are in the slots in the rack end.

   NOTE: Install the stop washer with the chamfered side facing out.

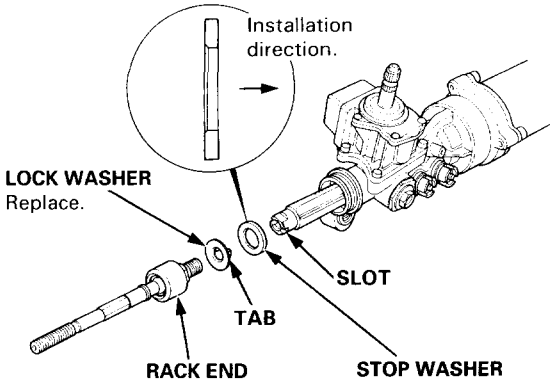

6. Tighten the rack end securely, then bend the lock washer back against the flat on the flange as shown.

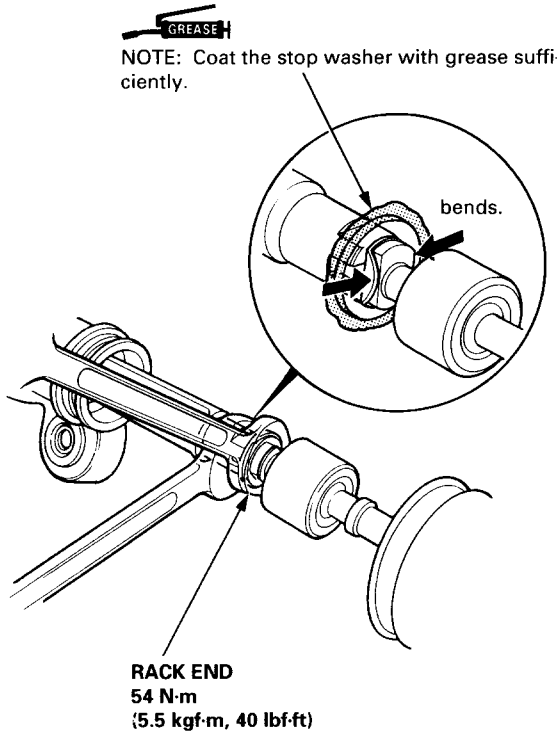

(cont'd)

Inspection (cont'd)

7. Install the boots on the rack end with the tube clamps.

   NOTE:
   - Coat the rack end and inside of the boot with the grease.
   - Before installing the boot, be sure that the pressure inside of the boot is the atmospheric pressure.
   - Install the boot band with the rack in the straight ahead condition (right and left tie-rods are equal in length).

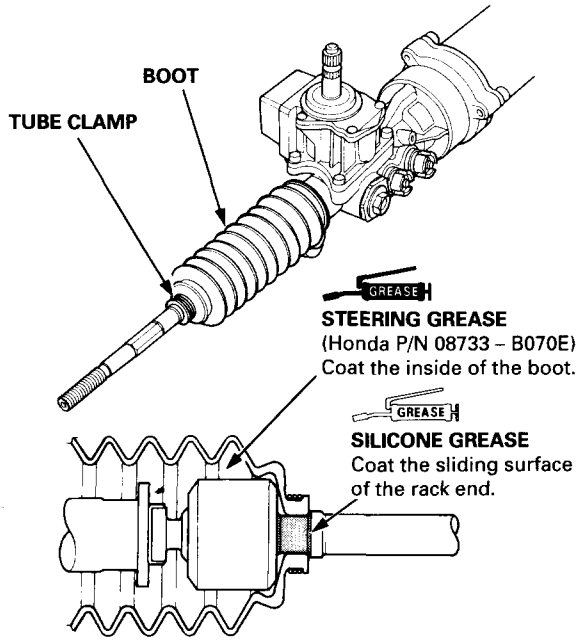

8. Install the new boot bands on the boot, and bend both sets of locking tabs. Lightly tap on the doubled portions to reduce their height.

   NOTE: After assembling, slide the rack right and left to be certain that the boots are not deformed or twisted.

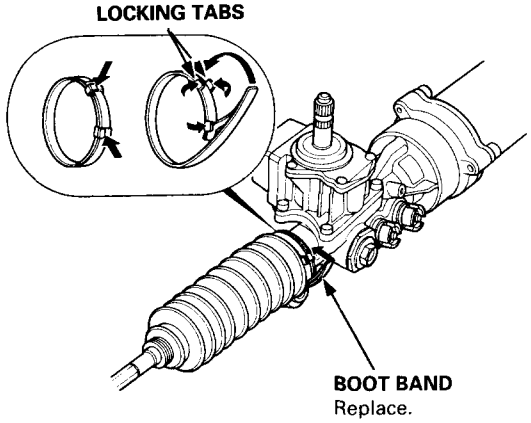

9. If the tie-rod ends were removed, install the tie-rods on the right and left rack ends and screw them in until the threaded section is 11 mm (7/16 in) in length.

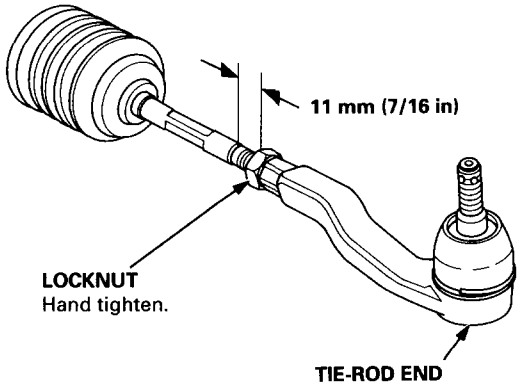

10. Install the gearbox and the front crossbeam in the reverse order removal (see page 17-57).

11. Check the wheel alignment and adjust if necessary (see section 18).

Ball Joint Boot

Replacement

1. Remove the set ring and the boot.

   CAUTION: Do not contaminate the boot installation section with grease.

2. Pack the interior of the boot and lip with grease.

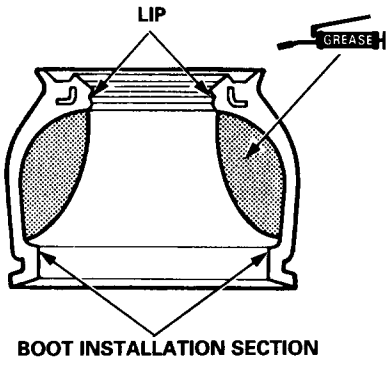

3. Wipe the grease off the sliding surface of the ball pin, then pack the lower area with fresh grease.

   CAUTION:
   - **Keep grease off the boot installation section and the tapered section of the ball pin.**
   - **Do not allow dust, dirt, or other foreign materials to enter the boot.**

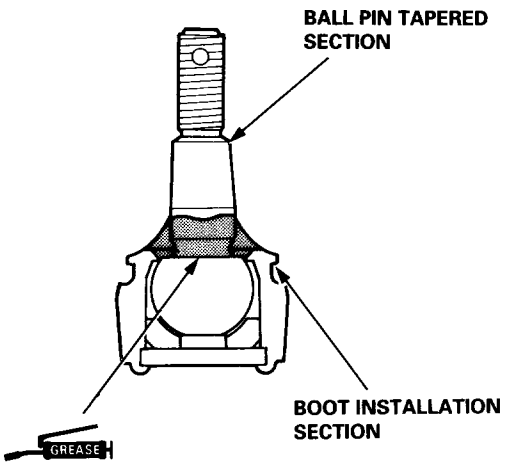

4. Install the boot in the groove of the boot installation section securely, then bleed air.

5. Insert the special tool into the threads in the ball pin, and align the end of the tool with the groove in the boot. Slide the set ring over the tool and into position.

BALL JOINT BOOT CLIP GUIDE
07MAG-SL00100
Adjust the depth by turning the tool.

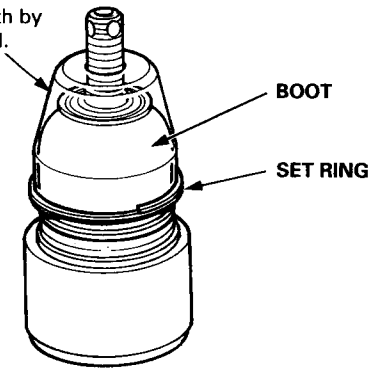

CAUTION: After installing the boot, check the ball pin tapered section for grease. Wipe it if necessary.

EPS Control Unit

Replacement

SRS components are located in this area. Review the SRS component locations, precautions, and procedures in the SRS (section 24) before performing repairs or service.

1. Remove the dashboard lower cover.

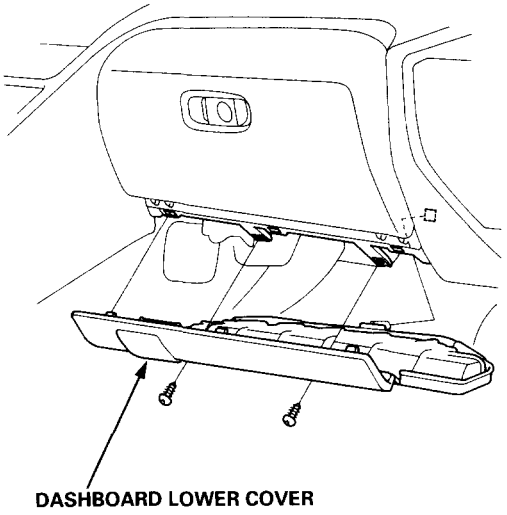

2. Turn up the floor mat, and remove the speaker cover and speaker.

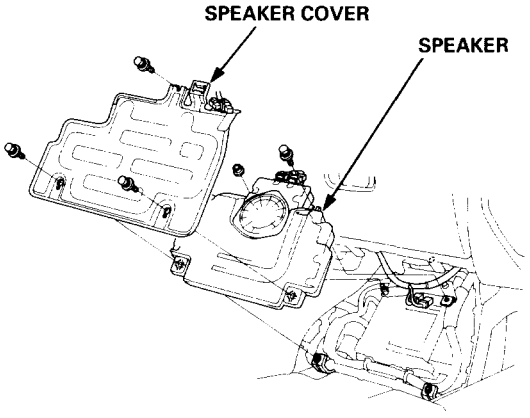

3. Disconnect the connectors from the EPS control unit, then remove it.

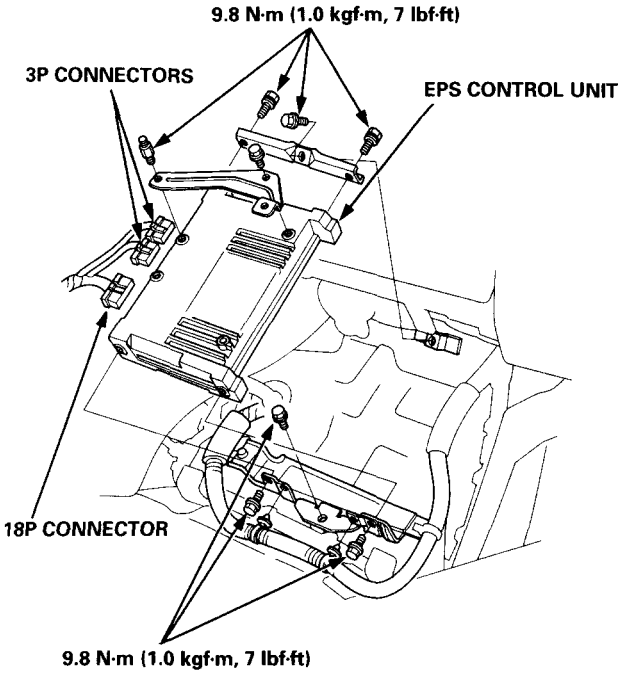

4. Installation is the reverse of removal procedure.

NOTE: After installation, start the engine and make sure that the EPS indicator light goes off.

Suspension

Special Tools 18–2
Component Location Index 18–3
System Description 18–4
Wheel Alignment
- Height
  - ’97–01 Models 18–6
  - ’02–’05 Models 18–2e
- Front Wheel Alignment Adjusting Procedure 18–7
- Front Turning Angle Inspection 18–10
- Rear Wheel Alignment Adjusting Procedure 18–11
- Runout 18–13
- Bearing End Play 18–13

Front Suspension
- Torque Specifications 18–14
- Hub Replacement 18–15

Knuckle/Control Arms/Compliance Pivot
- Component Location Index 18–20
- Removal 18–21
- Ball Joint Boot Replacement 18–26

Front Damper
- Removal 18–27
- Disassembly/Inspection 18–27
- Inspection 18–28
- Reassembly 18–29
- Installation 18–29

Rear Suspension
- Torque Specifications 18–30
- Hub Replacement 18–31

Knuckle/Control Arms
- Component Location Index 18–35
- Removal 18–36
- Ball Joint Boot Replacement 18–39

Rear Damper
- Removal 18–40
- Disassembly/Inspection 18–42
- Inspection 18–43
- Reassembly 18–44
- Installation 18–44

Special Tools

Ref. No.	Tool Number	Description	Qty	Page Reference
①	07GAF—SD40100	Hub Dis/Assembly Pin	1	18-33, 18-34
②	07GAF—SD40200	Hub Assembly Driver Attachment	1	18-18,18-34
③	07GAF—SD40700	Hub Dis/Assembly Base	2	18-18, 18-33
④	07GAG—SD40700	Ball Joint Boot Clip Guide	1	18-26, 18-39
⑤	07MAC—SL00100	Ball Joint Remover, 32 mm	1	18-21, 18-22, 18-24, 18-37
⑥	07MAC—SL00200	Ball Joint Remover, 28 mm	1	18-21, 18-36
⑦	07MAG—SL00200	Ball Joint Boot Clip Guide	1	18-26
⑧	07965—SD90100	Support Base	1	18-18, 18-34
⑨	07974—SA50800	Ball Joint Boot Clip Guide	1	18-39

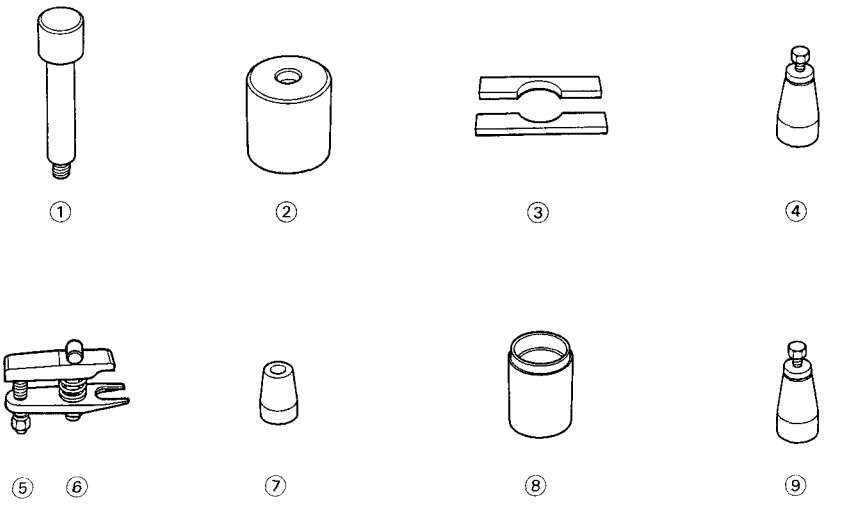

Component Locations

Index

Front Suspension:

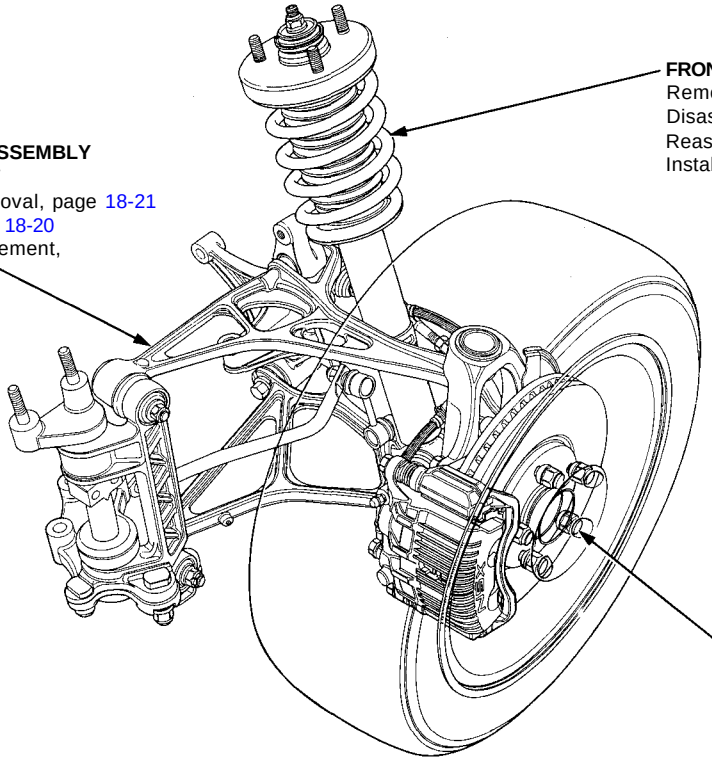

FRONT DAMPER
Removal, page 18-27
Disassembly/Inspection, page 18-27
Reassembly, page 18-29
Installation, page 18-29

FRONT SUSPENSION ASSEMBLY
- Knuckle/Control Arms/ Compliance Pivot Removal, page 18-21
- Illustrated Index, page 18-20
- Ball Joint Boot Replacement, page 18-26

FRONT HUB
Replacement, page 18-15

Rear Suspension:

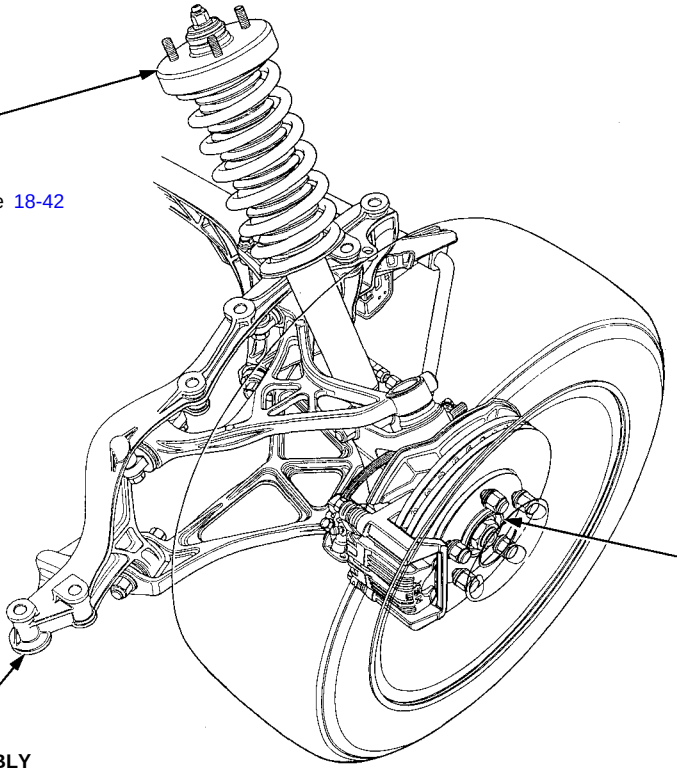

REAR DAMPER
Removal, page 18-40
Disassembly/Inspection, page 18-42
Reassembly, page 18-44
Installation, page 18-44

REAR HUB
Replacement, page 18-31

REAR SUSPENSION ASSEMBLY
- Knuckle/Control Arms Removal, page 18-36
- Illustrated Index, page 18-35
- Ball Joint Boot Replacement, page 18-39

System Description

Suspension Composition

Outline

Double wishbone independent suspension has been selected for each of the four wheels. This eliminates damper friction along the steering axis, and permits suspension geometry that takes full advantage of the performance potential of the wide, low aspect ratio tires. The double wishbone design also allows the use of aerodynamically-efficient and aesthetically pleasing low fender lines.

The knuckles and the suspension arms are manufactured from lightweight, high-strength aluminum alloys. This gives a notable reduction in unsprung weight which results in increased traction and improved ride. It also allows the individual suspension components to be designed in detail for maximum strength and rigidity.

FRONT:

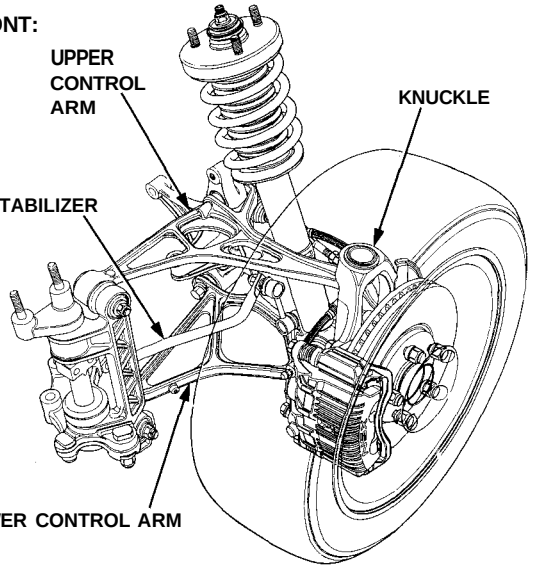

REAR:

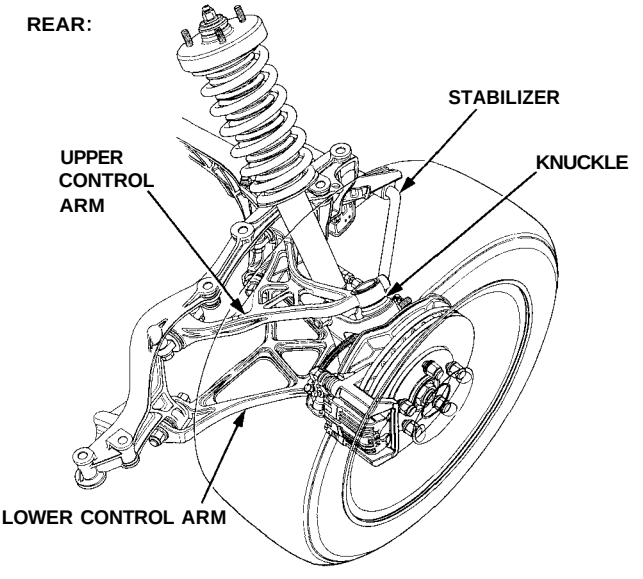

To further increase suspension link rigidity, and to obtain optimum knuckle geometry, the knuckles and ball joints are contained within the wheel profile. At each corner of the vehicle, the individual suspension system is attached to the aluminum stressed skin chassis by a cast aluminum sub-frame. This design further reduces overall weight, and ensures that suspension loads are fed into the chassis at the most efficient points, and in the most efficient directions.

A large front caster angle combined with small trail distance improves straight-line stability and response without causing heavy steering effort.

FRONT:

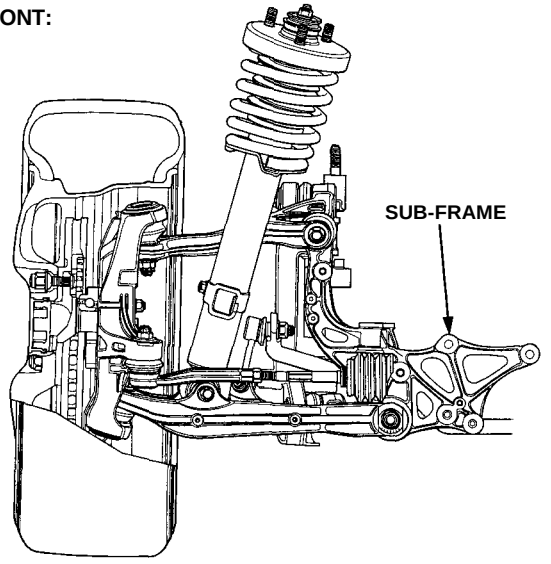

REAR:

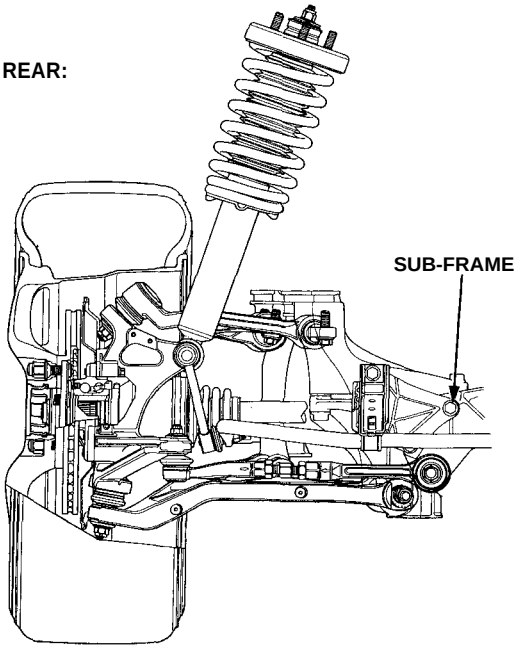

(Front Compliance Mechanism)

To avoid the usual compromise between ride quality and handling characteristics, a pivot-type "compliance mechanism" has been designed as an integral part of the front suspension. When one of the front wheels is subjected to a rearward movement by an uneven road surface or by heavy braking, the load produced has two separate effects. As with any suspension system, the load acts in the vertical direction to compress the suspension spring and reduce the ride height. On the NSX/NSX-T the load also acts through both the upper and lower control arms to twist the compliance pivot. This allows the wheel to move rearward by a controlled amount, thus absorbing energy. The result is an outstanding ride quality with only minimal changes to track width and wheel geometry. In cornering, the compliance pivot does not come into play, and the lateral suspension stiffness required for maximum roadholding and optimum control response is maintained.

TOP VIEW:

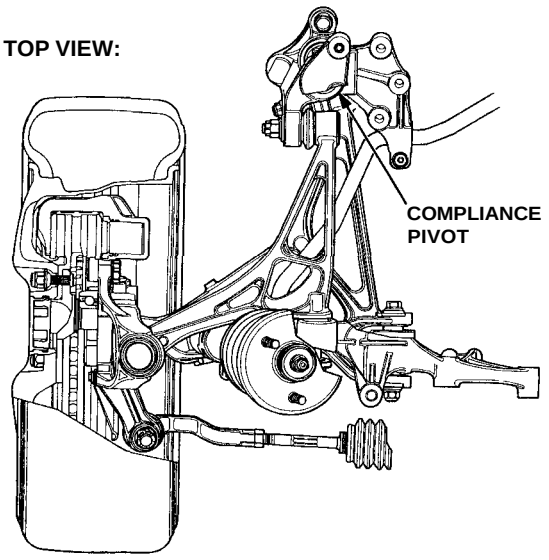

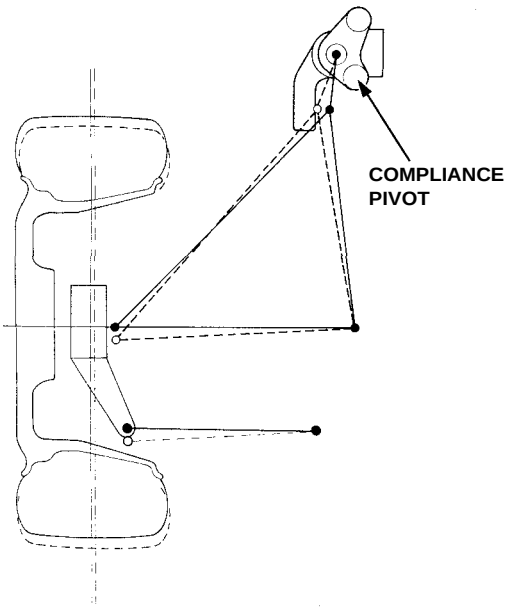

(Rear Toe Control Arm)

Many conventional passenger-vehicle independent rear suspension systems are subject to undesirable changes in toe-in angle with wheel movement. This results in instability both in cornering and in acceleration. In the NSX/NSX-T, the design and pivot locations of the rear toe control arm produce a slight controlled increase in toe-in during bump travel. As a result, the NSX/NSX-T is extremely stable under heavy cornering loads and over bumpy road surfaces.

TOP VIEW:

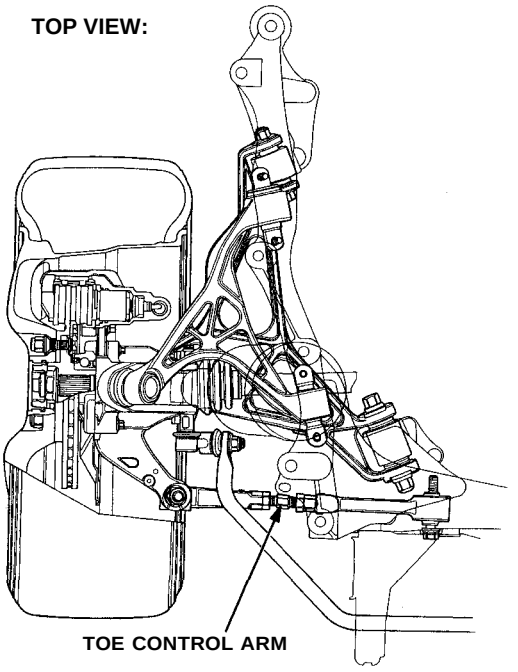

Wheel Alignment

Height

NSX/NSX-T four wheel alignment requires the use of equipment designed specifically for four wheel independent suspensions and capable of immediate feedback.

NOTE: For proper inspection/adjustment of the wheel alignment, check and adjust the following before checking the alignment.

- Check that the suspension is not modified.
- Check the tire size and tire pressure.
- Check the runout of the wheels and tires.
- Check the suspension ball joints. (Hold a wheel with your hands, then move the wheel up and down and right and left to check for wobbling.)
- Check the height of each suspension (see below).

Standard value

	Tire size	Tire pressure psi (kgf/cm², kPa)	Standard height mm (in) [empty vehicle]
Front	215/45ZR16	33 (2.3, 230)	170 – 180 mm (6.7 – 7.1 in)
Rear	245/40ZR17	40 (2.8, 275)	213 – 223 mm (8.4 – 8.9 in)

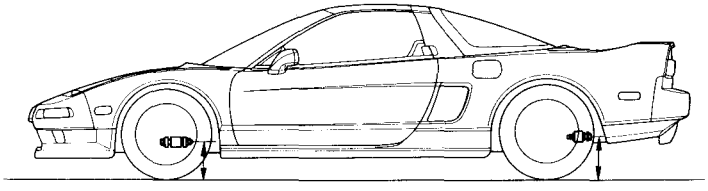

Front:
Ground clearance to the center of the lower control arm bolt

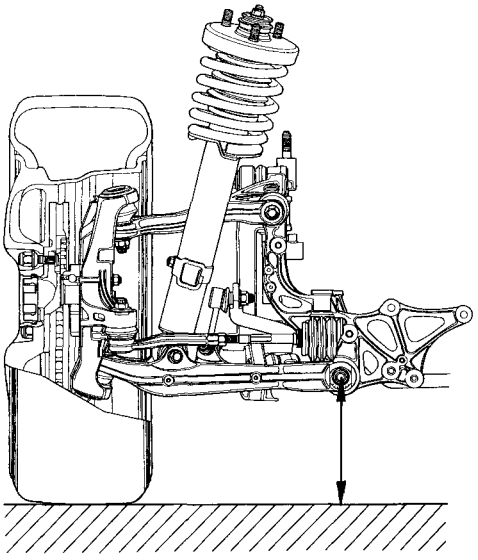

Rear:
Ground clearance to the center of the toe control arm bolt

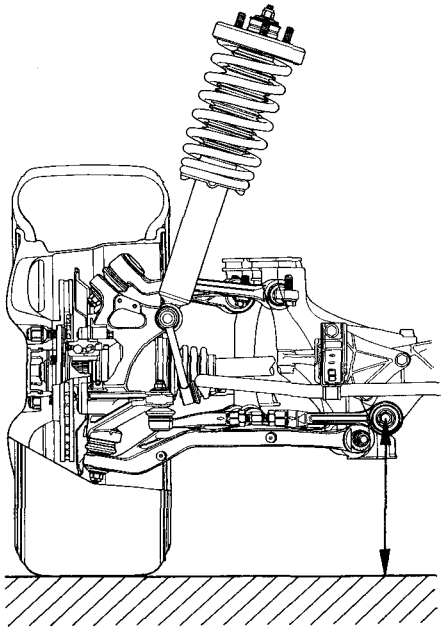

Height inspection:

- Before checking for the height, bounce the vehicle up and down several times before measuring.
- Check the height with the vehicle empty, parked on a level surface, with properly inflated tires (tread wear indicators must not be showing). If the height is out of specification, load or unload the vehicle as necessary.

Front Wheel Alignment Adjusting Procedure

Adjustment

NOTE: NSX/NSX-T four wheel alignment requires the use of equipment designed specifically for four wheel independent suspensions and capable of immediate feedback.

The NSX/NSX-T suspension can be adjusted for camber, caster (front only), and toe. However, because each of them relates to the other, the camber changes when the toe is adjusted for example. Therefore, the total adjustment of the front/rear wheel alignment is required whenever one of the elements (camber, caster, or toe) is adjusted.

Front wheel alignment adjusting procedure

- Check tire pressure on both sides.
- ↓
- Check the ride height on both sides.
- ↓
- Measure and adjust both camber and toe of the left side.
- ↓
- Measure and adjust both camber and toe of the right side.
- ↓
- Adjust caster on both sides.
- ↓
- Measure and readjust both camber and toe of the left side.
- ↓
- Measure and readjust both camber and toe of the right side.

TOP VIEW:

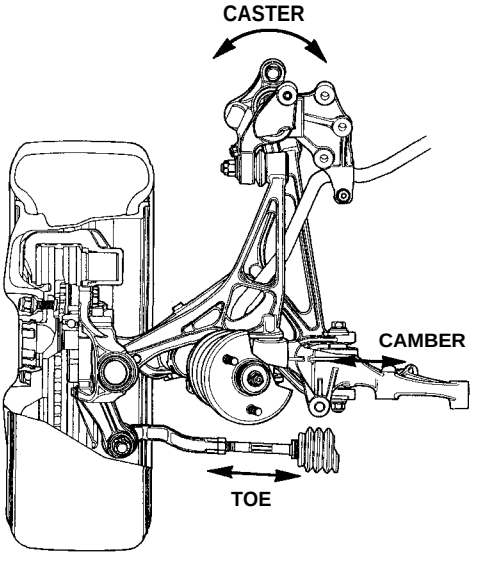

(cont'd)

Front Wheel Alignment Adjustment Procedure (cont'd)

NOTE:
- NSX/NSX-T four wheel alignment requires the use of equipment designed specifically for four wheel independent suspensions and capable of immediate feedback.
- The ride height is very important for setting the alignment. For every 10 mm (0.4 in) of change in the front ride height, the camber will change approximately 10 minutes.
- The front alignment settings on the NSX are interactive.
- A slight change in toe will dramatically change the camber.
- Always inspect and adjust the front wheel alignment with the steering wheel in the straight ahead position.

1. Drive the vehicle on the alignment rack.

2. Check the tire pressure and ride height (see page 18-6).

3. Center the steering wheel in the straight ahead position, and lock it in place with the steering lock.

4. Set the alignment equipment following the manufacturer's instructions.

5. Measure and adjust the camber and toe on the left side, then measure and adjust the right side.

Toe:

— Loosen the locknut, and turn the right and left tie-rods to adjust the front toe.

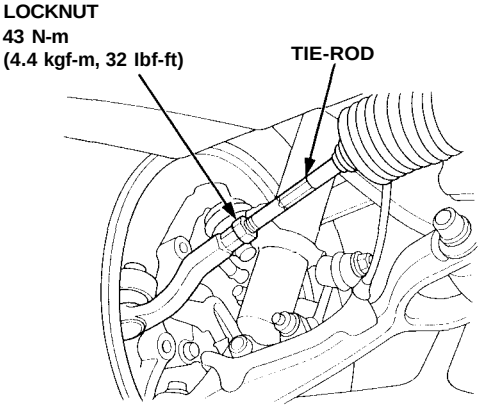

Camber:

— Loosen the self-locking nut on the front lower control arm adjusting point, and adjust the camber by turning the adjusting cam.

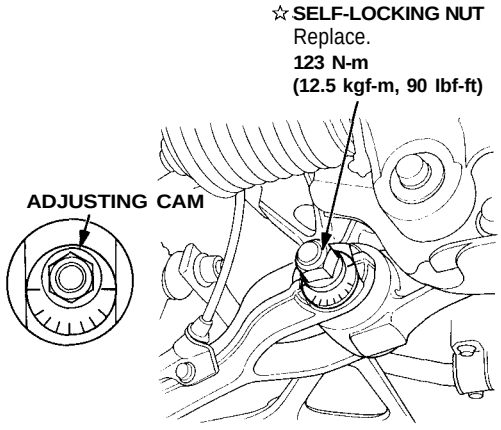

☆: **Corrosion resistant bolt/nut**

6. Measure the caster on the both sides, and adjust the caster to specifications.

Caster:

- Loosen the pivot adjuster mounting nuts (self-locking nuts) under the compliance pivot, and adjust the caster by turning the adjusting cam.

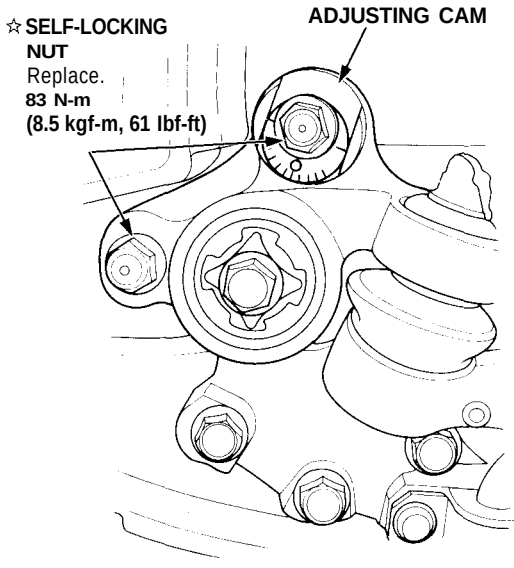

☆: **Corrosion resistant bolt/nut**

7. Remeasure and, if necessary, adjust the camber and toe on the left side first, then the right side.

Front Specifications

Toe-out: 3.5 ± 1.0 mm (5/32 + 1/16 in)
Camber: -0°20' ± 30'
Caster: 8°00' + 45'

Wheel Alignment

Front Turning Angle Inspection

NOTE:
- Place a vehicle on a level surface before inspection.
- Release the parking brake and be sure that the vehicle is empty.
- Check that the suspensions are at the standard height (see page 18-6).

1. Turn the steering wheel fully to the right and left while applying the brake, and measure the turning angle of both wheels.

Turning angle: Inward: 33°06' ± 2°
Outward: 26 34' (Reference value)

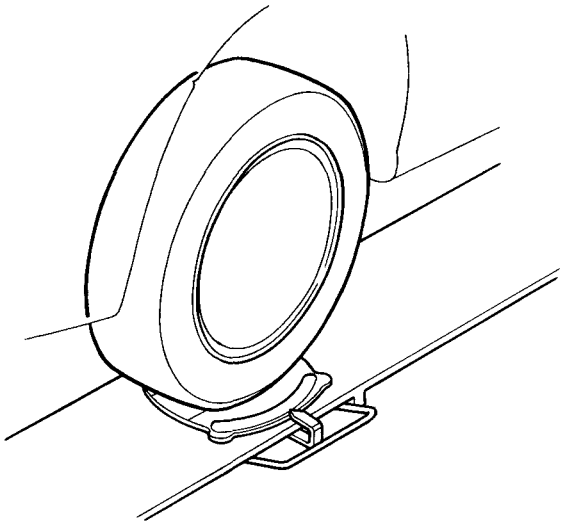

2. If the measurements are not within the specifications or if the inward turning angles differ between the right and left, check the toe and adjust accordingly (see page 18-8).

3. If the toe adjustment is within specifications, and turning angle is still off, check for bent or damaged suspension components.

Rear Wheel Alignment Adjusting Procedure

Rear wheel alignment adjusting procedure

Check tire pressure on both sides.

↓

Check the ride height on both sides.

↓

Adjust both camber and toe of the left side.

↓

Adjust both camber and toe of the right side.

TOP VIEW:

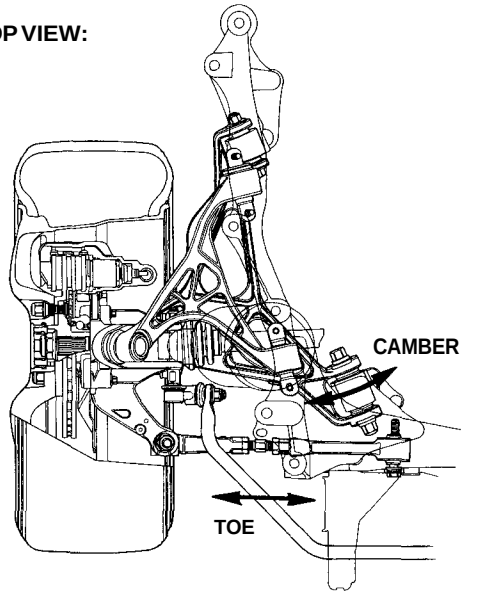

(cont'd)

Wheel Alignment

Rear Wheel Alignment Adjusting Procedure (cont'd)

NOTE: NSX/NSX-T four wheel alignment requires the use of equipment designed specifically for four wheel independent suspensions and capable of immediate feedback.

1. Drive the vehicle on the alignment rack.

2. Check the tire pressure and ride height as described on page 18-6.

3. Center the steering wheel.

Toe

-1. Measure the length of the threaded section on the right and left toe control arms.

Standard: 4.0 mm (3/16 in)
Difference between right and left:
1.0 mm (1/16 in) max.

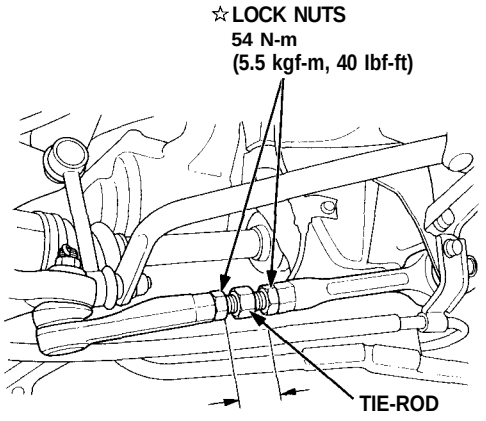

☆: **Corrosion resistant bolt/nut**

-2. If the measurement is out of specification, loosen the locknuts, and adjust the rear toe by turning the right and left tie-rods.

Camber

-1. Loosen the self-locking nut on the rear lower control arm adjusting point, then adjust the cam position so that the right and left graduations on the adjusting cam are in contact with groove wall.

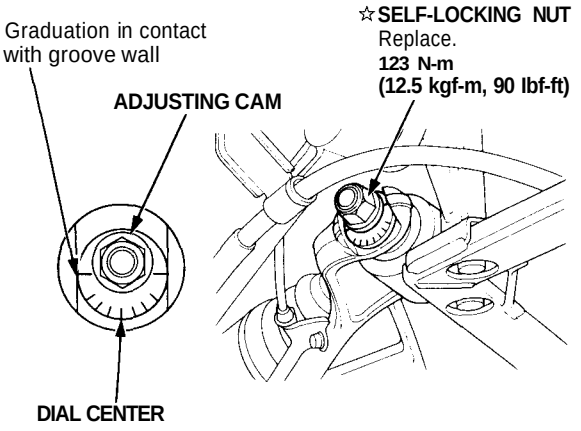

☆: **Corrosion resistant bolt/nut**

-2. Mark the arm in the position which aligns with the dial center of the adjusting cam.

4. Measure the readings for camber and toe according to the alignment equipment manufacturer's instructions.

5. Adjust the camber and toe at the same time on one side of the vehicle. Repeat for the other side of the vehicle.

Rear Specifications

Toe-in: 4.0 ± 1.0 mm (3/16 ± 1/16 in)
Camber: -1°30' ± 30'

Runout

1. Raise the vehicle off the ground, and support it with safety stands in the proper locations (see section 1).

2. Place the dial gauge on each front and rear wheel rim, and turn the wheel slowly by hand. Check the axial and radial runout for front/rear wheel.

Front and Rear Wheel Axial Runout:
Standard: 0 - 0.7 mm (0 - 0.03 in)
Service Limit: 2.0 mm (0.08 in)

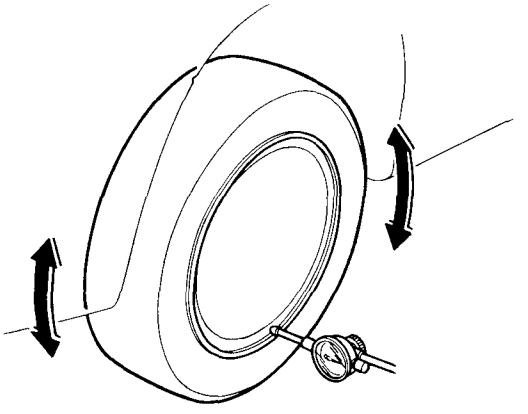

Front and Rear Wheel Radial Runout:
Standard: 0-0.7 mm (0-0.03 in)
Service Limit: 1.5 mm (0.06 in)

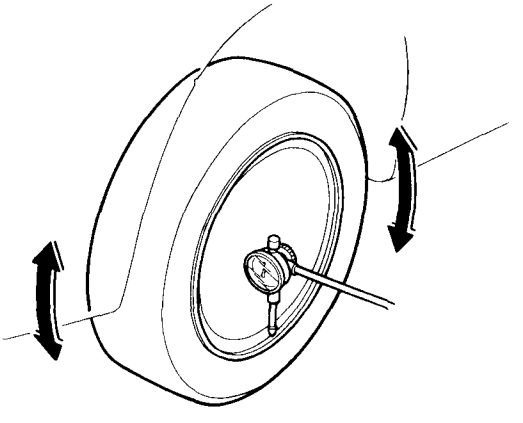

- If the wheel axial runout exceeds the service limit, check the bearing end play.
- If the bearing end play is within the service limit, replace the wheel.

Bearing End Play

Front Wheel End Play:
Standard: 0 mm (0 in)
Service limit: 0.05 mm (0.002 in) max.

Rear Wheel End Play:
Standard: 0 mm (0 in)
Service limit: 0.05 mm (0.002 in) max.

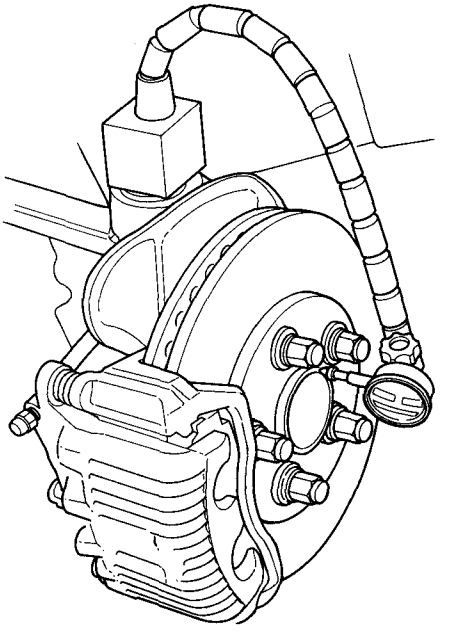

Replace the wheel bearing with new one if the service limit is exceeded.

Front Suspension

Torque Specifications

CAUTION:

- **Replace the self-locking nuts after removal.**
- **Replace the self-locking bolts if you can easily thread a non-self-locking nut past their nylon locking inserts. (It should require 1 N-m (0.1 kgf-m, 0.7 lbf-ft) of torque to turn the test nut on the bolt).**
- **The vehicle should be on the ground before any bolts or nuts connected to rubber mounts or bushings are tightened.**
- **Torque the castle nut to the lower torque specification, then tighten it only far enough to align the slot with the pin hole. Do not align the nut by loosening.**

NOTE: Wipe off any dirt, oil or grease from the threads before tightening the fasteners.

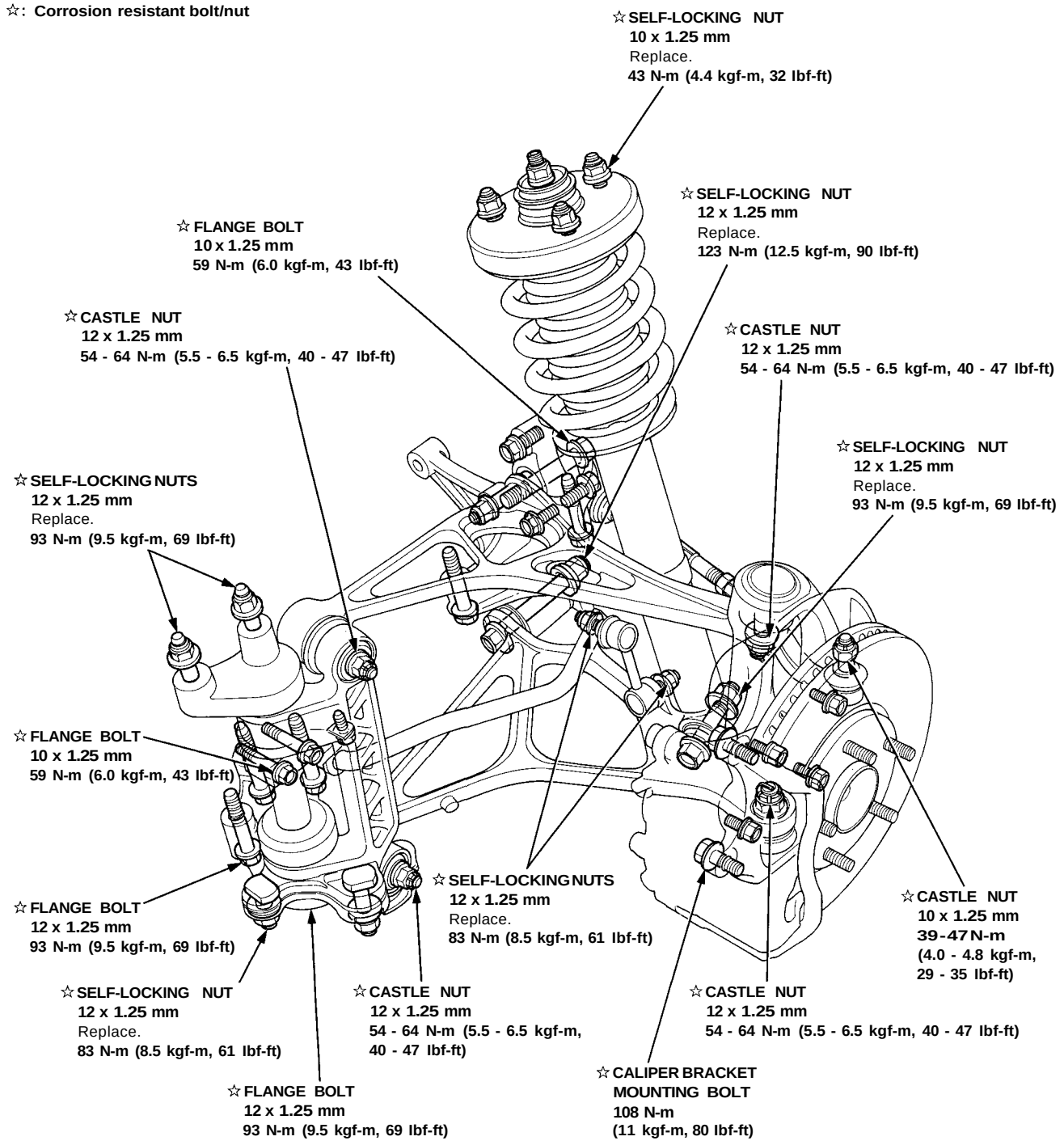

Hub Replacement

NOTE:
- Use only genuine Honda wheel weights for aluminum wheels. Non-genuine wheel weights may corrode and damage the aluminum wheels.
- On the aluminum wheels, remove the center cap from inside of the wheel after removing the wheel.
- Before installing the brake disc, clean the mating surface of the front hub and inside of the brake disc.
- Before installing the wheel, clean the mating surfaces of the brake disc and inside of the wheel.

☆: **Corrosion resistant bolt/nut**

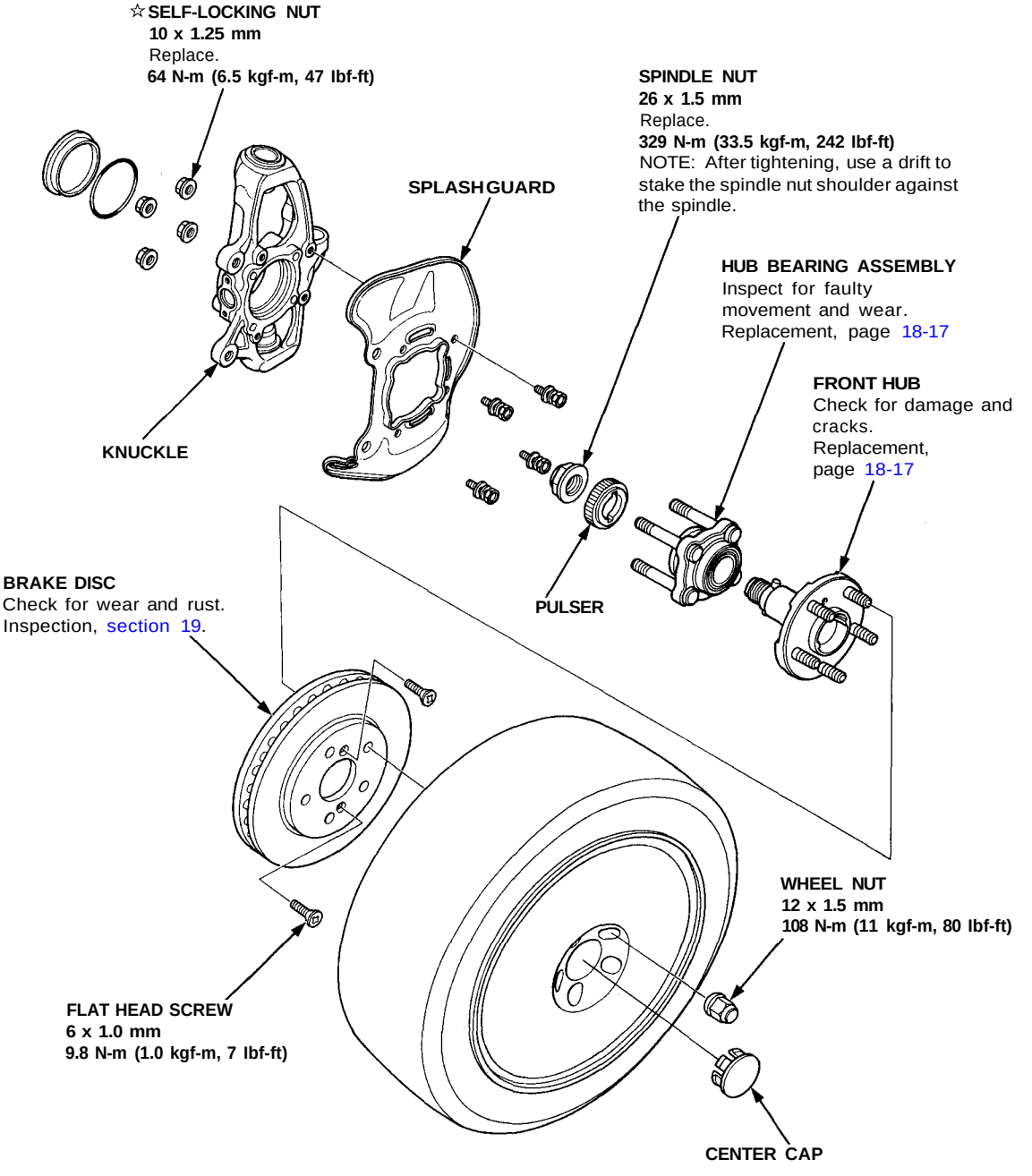

(cont'd)

Hub Replacement (cont'd)

1. Loosen the wheel nuts slightly.
2. Raise the front of vehicle, and support it on safety stands in proper locations (see section 1).
3. Remove the wheel nuts and wheel.

   NOTE: Before installing the wheel, clean the mating surfaces of the brake disc and inside of the wheel.

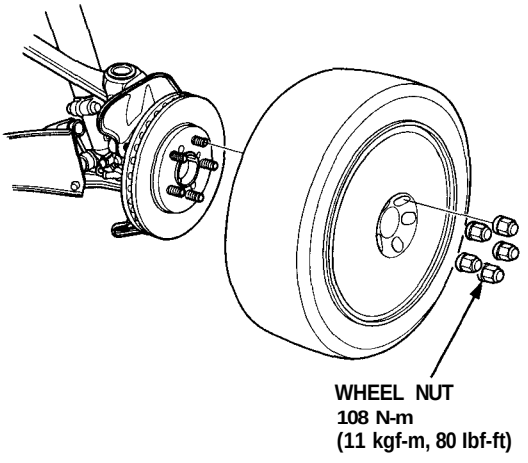

4. Remove the brake hose mounting bolts.

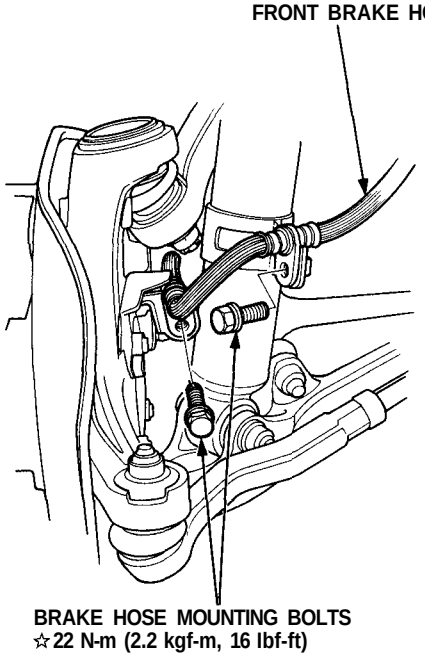

☆: Corrosion resistant bolt/nut

5. Remove the wheel sensor from the knuckle and front lower control arm.

   NOTE:
   - Do not disconnect the wheel sensor.
   - Be careful when installing the sensors to avoid twisting wires.

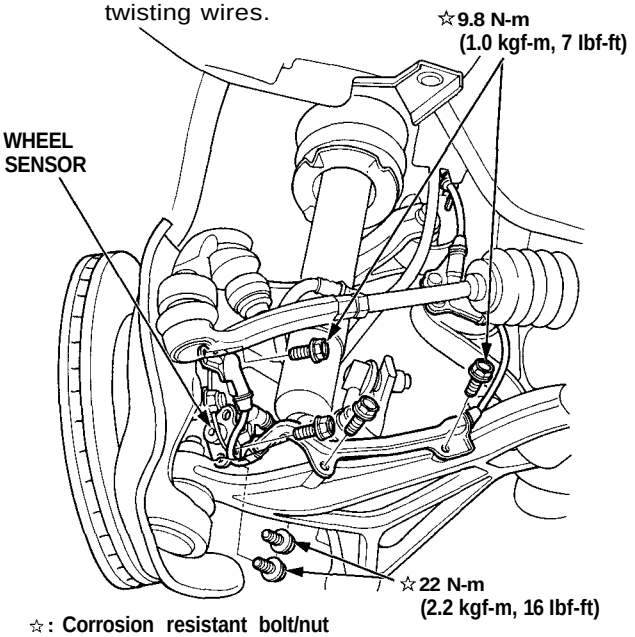

☆: Corrosion resistant bolt/nut

6. Remove the caliper bracket mounting bolts, and hang the caliper assembly to one side.

   CAUTION: To prevent accidental damage to the caliper assembly or brake hose, use a short piece of wire to hang the caliper assembly from the undercarriage.

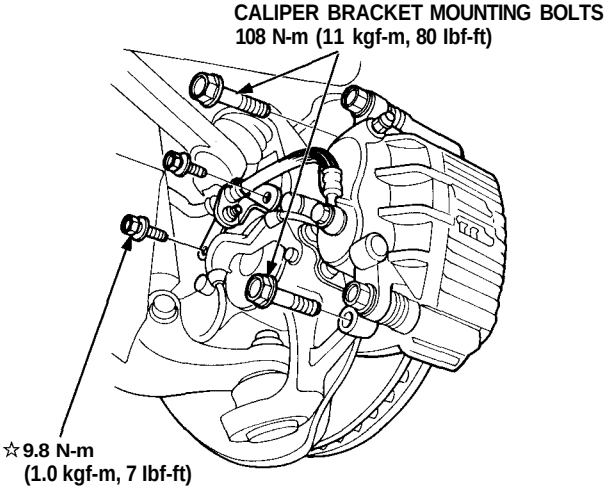

☆: Corrosion resistant bolt/nut

7. Remove the flat head screws. Install two 8 x 12 mm bolts into the disc to push it away from the hub.

NOTE: Turn each bolt two turns at a time to prevent cocking the disc excessively.

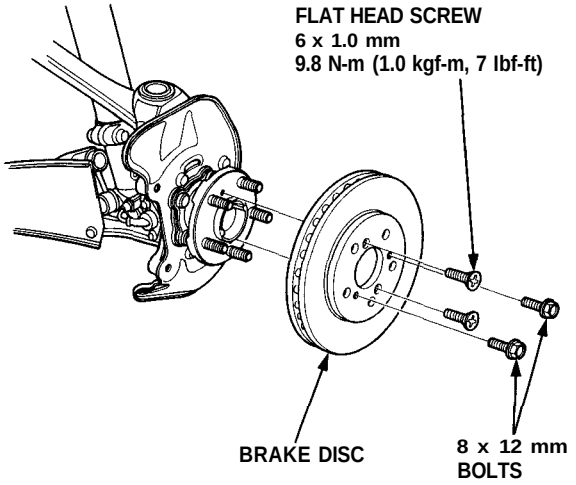

8. Remove the hub unit from the knuckle.

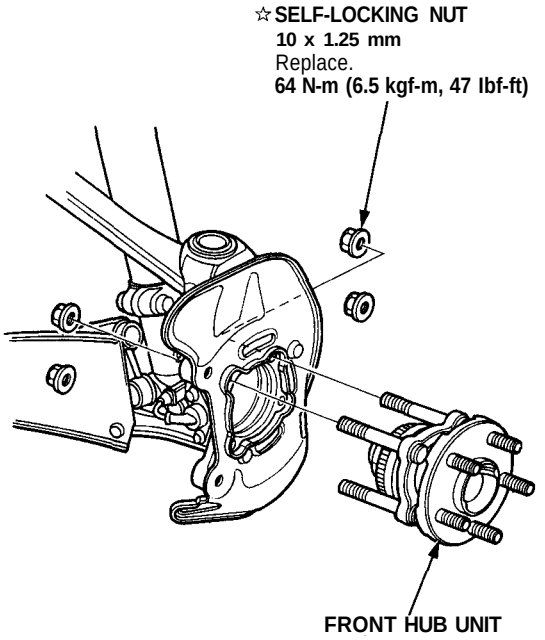

☆: Corrosion resistant bolt/nut

Front Wheel Bearing Replacement:

1. Raise the locking tab on the spindle nut, then remove the nut.

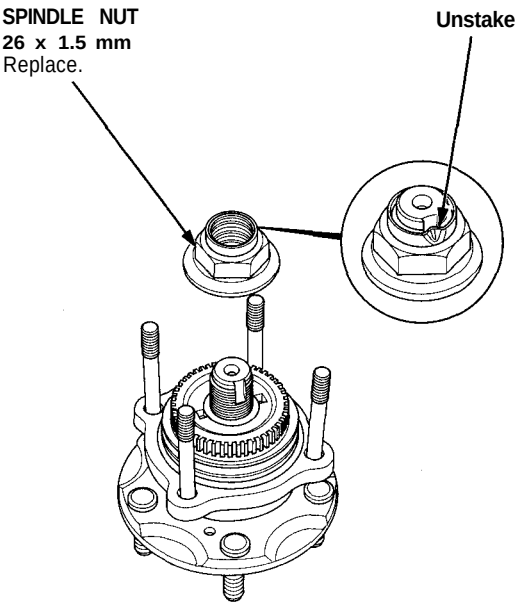

2. Remove the pulser using a two-jaw puller.

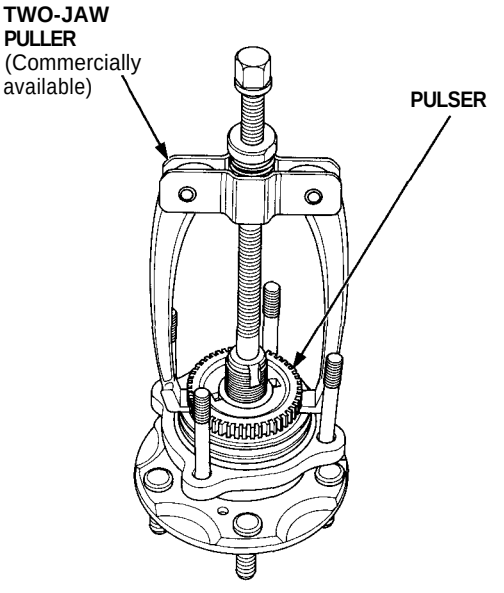

(cont'd)

Hub Replacement (cont'd)

3. Separate the wheel bearing from the hub using the special tools and a press.

CAUTION: Hold onto the hub to keep it from falling when pressed clear.

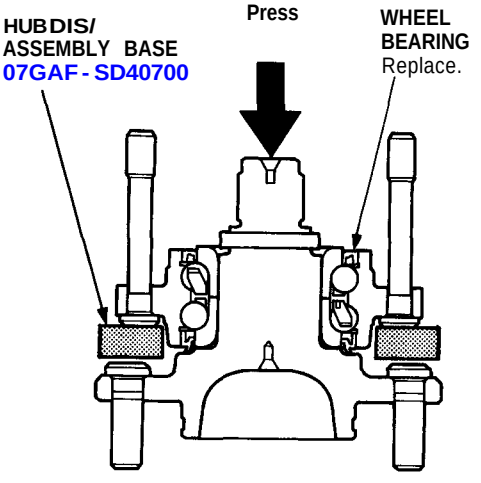

4. Remove the outboard bearing inner race from the hub as shown.

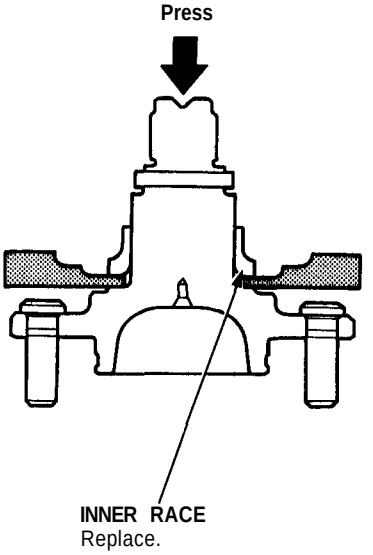

NOTE: Wash the bearing and hub thoroughly in high flash point solvent before reassembly.

NOTE: Replace the bearing with a new one after removal.

5. Press a new wheel bearing into the hub using the special tools shown and a press.

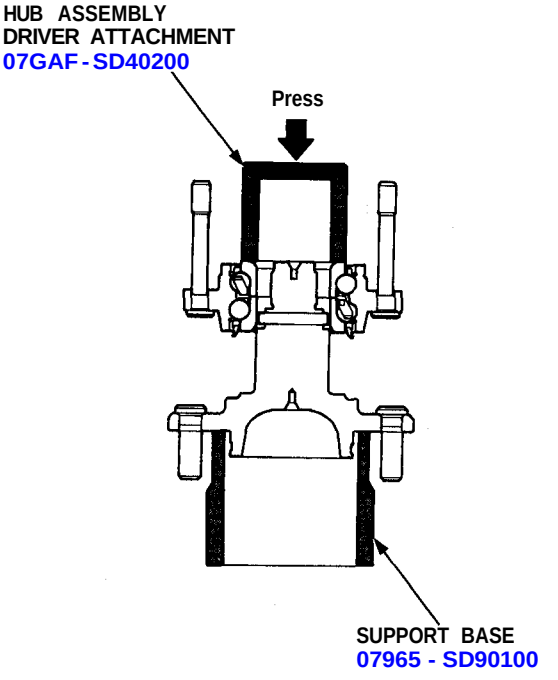

6. Install the pulser.

NOTE: Be sure the pulser engages with the pin on the spindle.

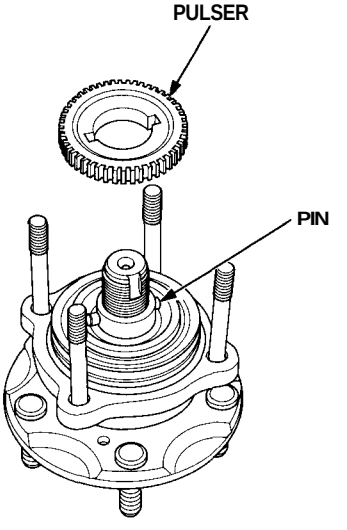

7. Tighten the new spindle nut to specified torque, then stake the spindle nut shoulder against the spindle.

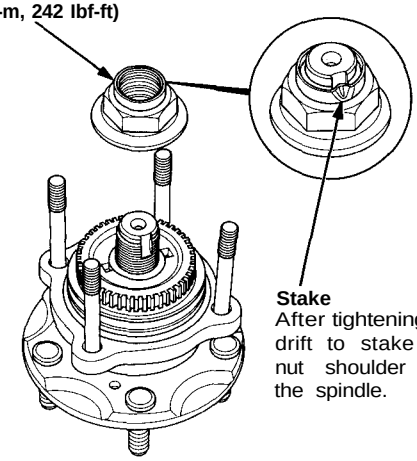

Knuckle/Control Arms/Compliance Pivot

Illustrated Index

Overall Suspension

NOTE:
- Wipe off the grease before tightening the nut at the ball joint.
- Torque specifications, see page 18-14.

☆: **Corrosion resistant bolt/nut**

NOTE: Align the white line on the stabilizer bar with the bushing end, and install the stabilizer bar.

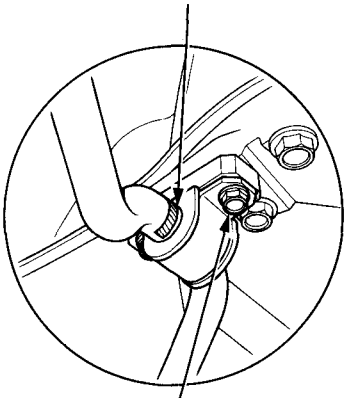

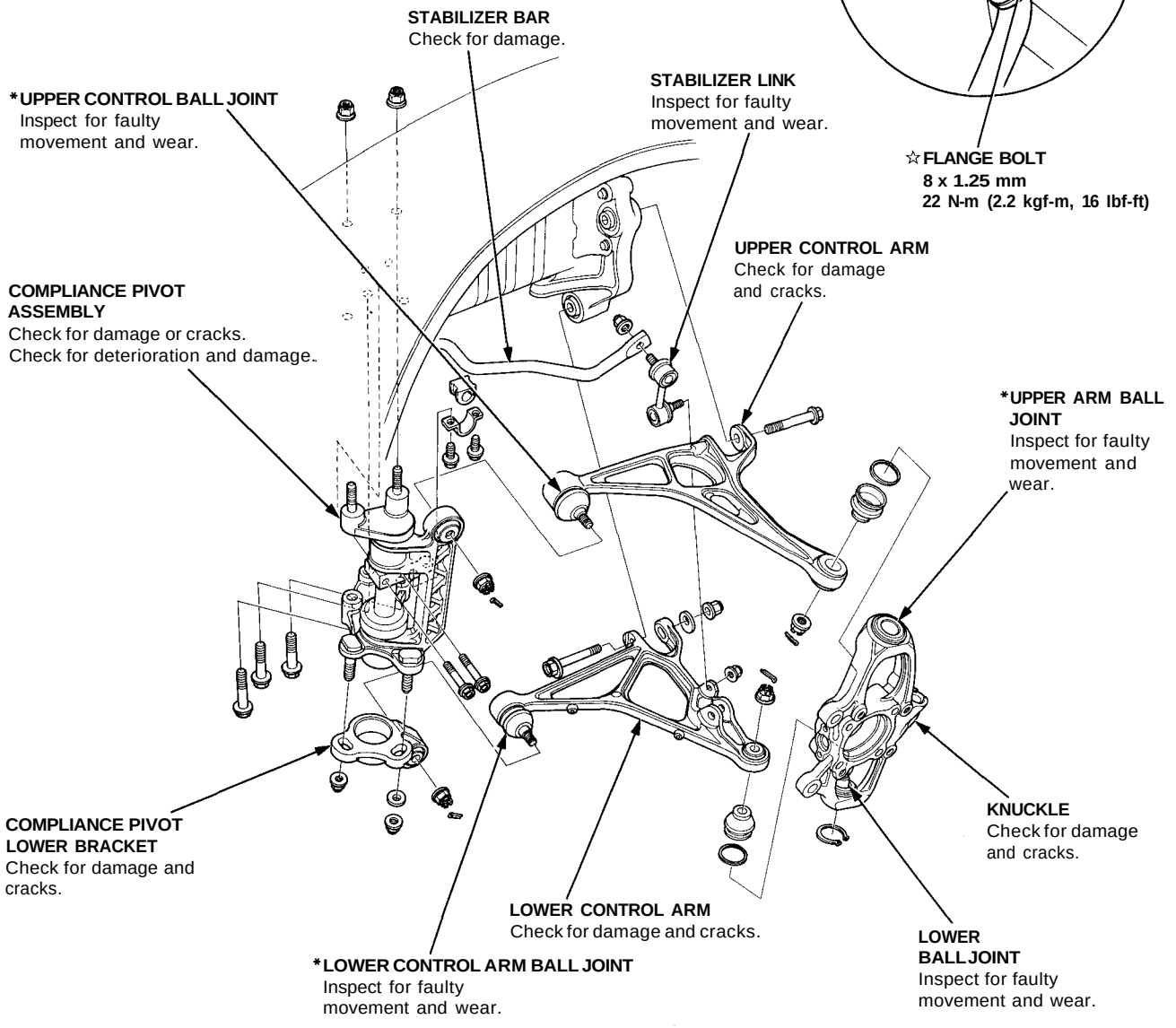

NOTE: Replace the joint boot if any are damaged. The parts marked with an asterisk (*) have a retainer attaching the ball joints. Replace the retainer whenever the boot is replaced.

CAUTION: Do not remove the arms, knuckle, and compliance pivot by striking them with a hammer, and take care not to drop them.

Removal

1. Remove the front wheel and bearing unit assembly (see page 18-15).

2. Remove the splash guard from the knuckle.

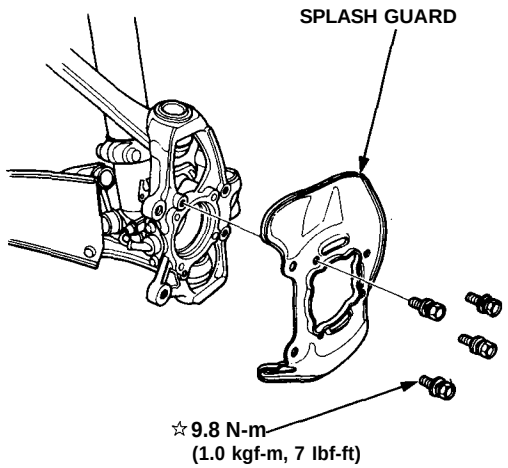

☆: **Corrosion resistant bolt/nut**

3. Remove the lower control arm guard.

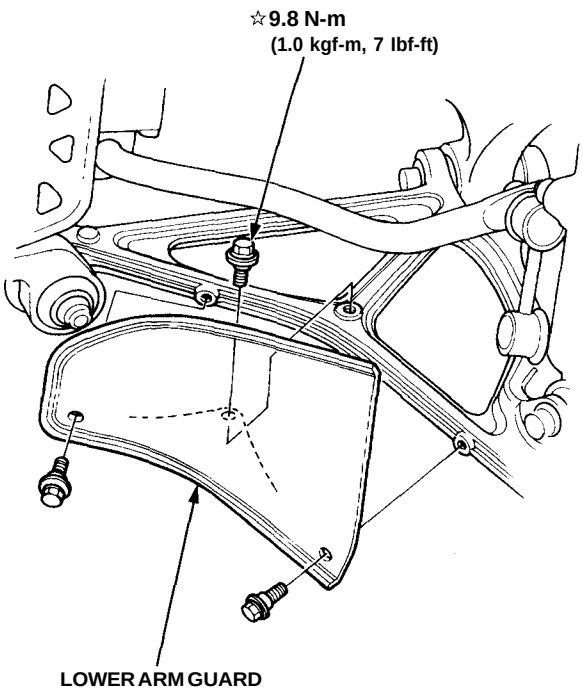

☆: **Corrosion resistant bolt/nut**

NOTE: Use the ball joint removers to separate the ball joints from the suspension or steering arm.

CAUTION:
- **Be careful not to damage the ball joint boot.**
- **Torque the castle nut to the lower torque specification, then tighten it only far enough to align the slot with the pin hole. Do not align the nut by loosening.**

4. Clean any dirt or grease off the ball joint.

5. Remove the cotter pin from the steering arm, and remove the nut.

6. Apply grease to the special tool on the areas shown. This will ease installation of the tool and prevent damage to the pressure bolt threads.

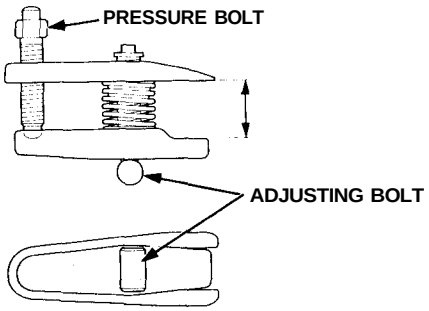

NOTE: After making the adjustment to the adjusting bolt, be sure the head of the adjusting bolt is in this position to the allow the jaw to pivot.

7. Install a 12 mm hex nut on the ball joint. Be sure that the hex nut is flush with the ball joint pin end to prevent damage to the threaded end of the ball joint.

8. Use the ball joint remover, 28 mm, as shown. Insert the jaws carefully, making sure you do not damage the ball joint boot. Adjust the jaw spacing by turning the pressure bolt.

NOTE: If necessary, apply penetrating type lubricant to loosen the ball joint.

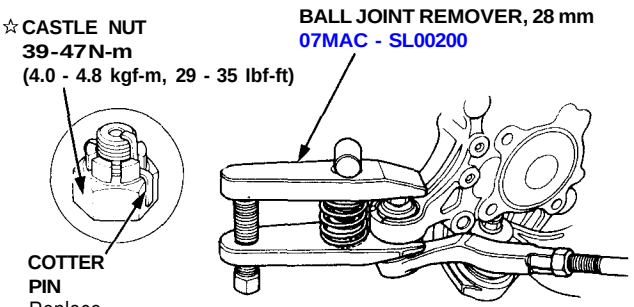

(cont'd)

Removal (cont'd)

9. Once the tool is in place, turn the adjusting bolt as necessary to make the jaws parallel. Then hand-tighten the pressure bolt, and recheck the jaws to make sure they are still parallel.

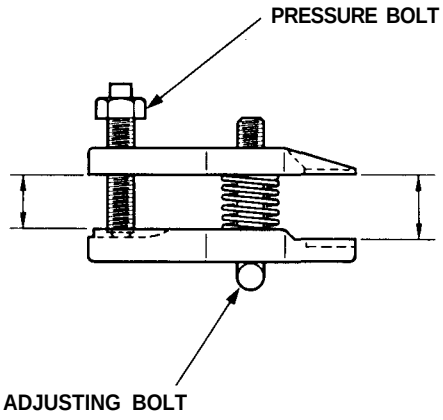

10. With a wrench, tighten the pressure bolt until the ball joint shaft pops loose from the steering arm.

⚠WARNING Wear eye protection. The ball joint can break loose suddenly and scatter dirt or other debris in your eyes.

11. Remove the tool, then remove the nut from the end of the ball joint and pull the ball joint out of the steering/suspension arm. Inspect the ball joint boot, and replace it if damaged.

12. Remove the cotter pin and lower control arm ball joint nut.

13. Install the 12 mm hex nut on the ball joint. Be sure that the 12 mm hex nut is flush with the ball joint pin end, or the threaded section of the ball joint pin might be damaged by the ball joint remover.

14. Use the ball joint remover, 32 mm, as shown on page 18-21 to separate the ball joint and lower control arm.

NOTE: If necessary, apply penetrating type lubricant to loosen the ball joint.

☆ **CASTLE NUT**
12 x 1.25 mm
54-64N-m
(5.5 - 6.5 kgf-m, 40 - 47 lbf-ft)

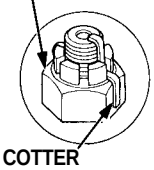

COTTER PIN
Replace.
On reassembly, bend the cotter pin as shown.

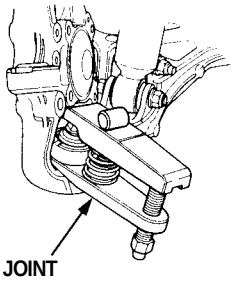

BALL JOINT REMOVER, 32 mm
07MAC - SL00100

☆: **Corrosion resistant bolt/nut**

15. Remove the cotter pin and the upper ball joint nut.

16. Install the 12 mm hex nut on the ball joint. Be sure that the 12 mm hex nut is flush with the ball joint pin end, or the threaded section of the ball joint pin might be damaged by the ball joint remover.

17. Use the ball joint remover, 32 mm, as shown on page 18-21 to separate the ball joint and upper arm.

NOTE: If necessary, apply penetrating type lubricant to loosen the ball joint.

COTTER PIN
Replace.
On reassembly, bend the cotter pin as shown.

☆**CASTLE NUT**
12 x 1.25 mm
54-64N-m
(5.5 - 6.5 kgf-m, 40 - 47 lbf-ft)

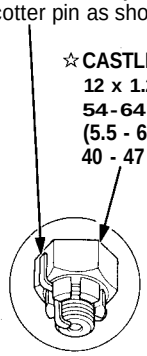

BALL JOINT REMOVER, 32 mm
07MAC - SL00100

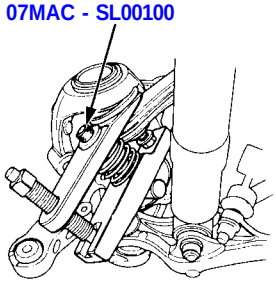

☆: **Corrosion resistant bolt/nut**

18. Remove the knuckle.

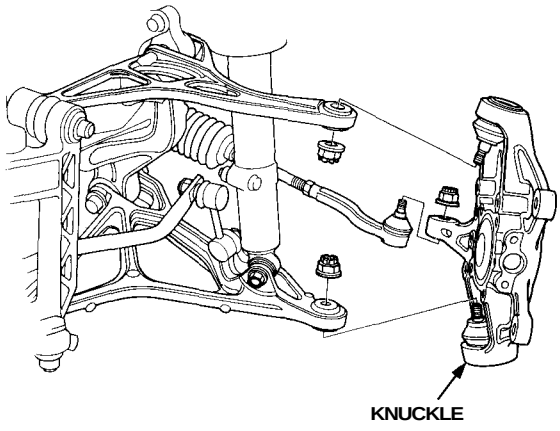

19. Separate the lower control arm and damper by removing the damper mounting bolt.

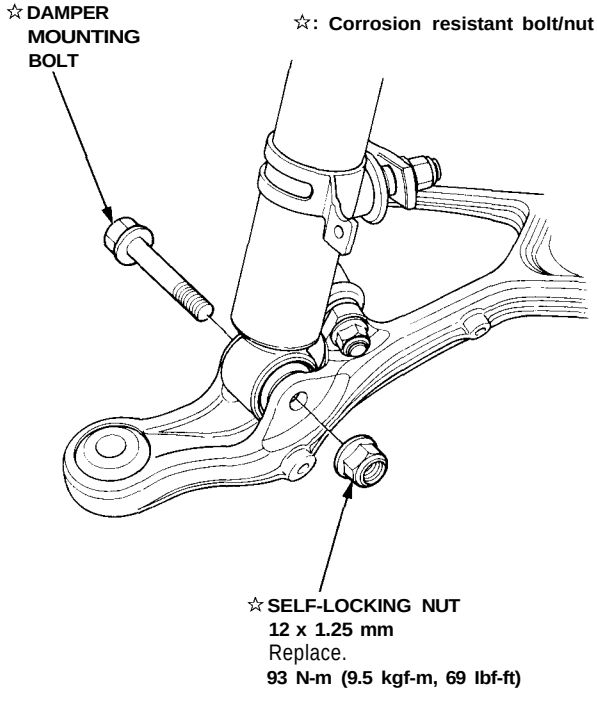

20. Hold the ball pin of the stabilizer link with a hex wrench, and loosen the self-locking nut.

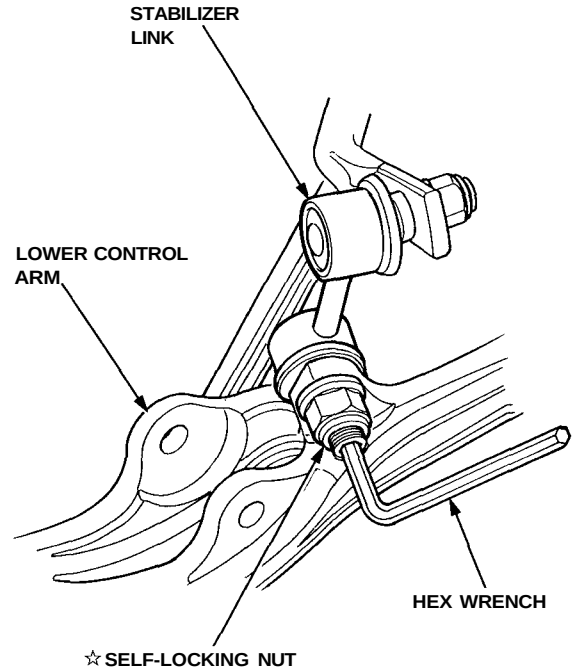

☆: Corrosion resistant bolt/nut

21. Disconnect the stabilizer link from the lower control arm.

(cont'd)

Removal (cont'd)

22. Remove the cotter pin and lower arm ball joint nut.

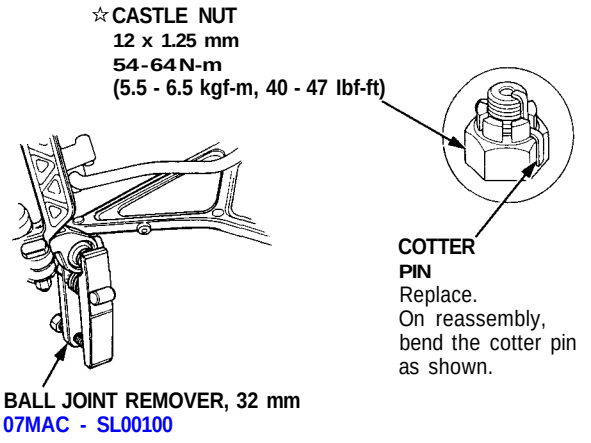

☆: Corrosion resistant bolt/nut

23. Install the 12 mm hex nut on the ball joint. Be sure that the 12 mm hex nut is flush with the ball joint pin end, or the threaded section of the ball joint pin might be damaged by the ball joint remover.

24. Use the ball joint remover, 32 mm, as shown on page 18-21 to separate the ball joint and compliance pivot.

NOTE: If necessary, apply penetrating type lubricant to loosen the ball joint.

CAUTION: Avoid damaging the ball joint boot.

25. Remove the lower control arm by removing the adjusting bolt.

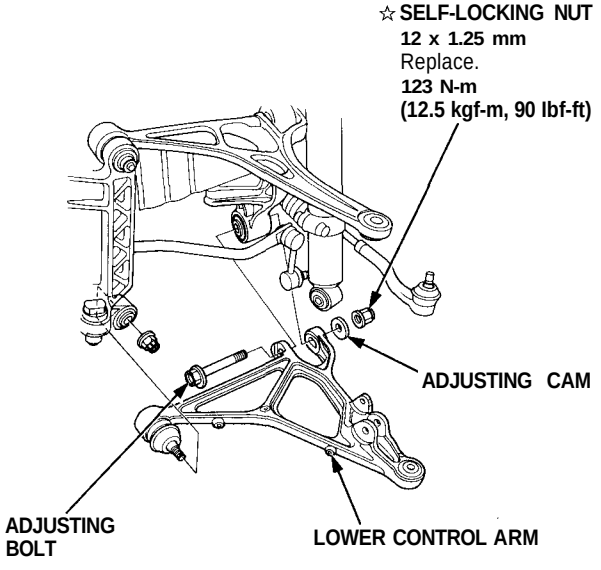

☆: Corrosion resistant bolt/nut

26. Remove the cotter pin and upper arm ball joint nut.

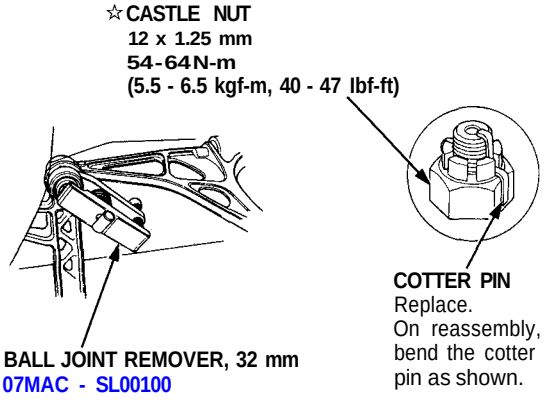

☆: Corrosion resistant bolt/nut

27. Install the 12 mm hex nut on the ball joint. Be sure that the 12 mm hex nut is flush with the ball joint pin end, or the threaded section of the ball joint pin might be damaged by the ball joint remover.

28. Use the ball joint remover, 32 mm, as shown on page 18-21 to separate the ball joint and compliance pivot.

NOTE: If necessary, apply penetrating type lubricant to loosen the ball joint.

CAUTION: Avoid damaging the ball joint boot.

29. Remove the stabilizer bar bracket from the compliance pivot.

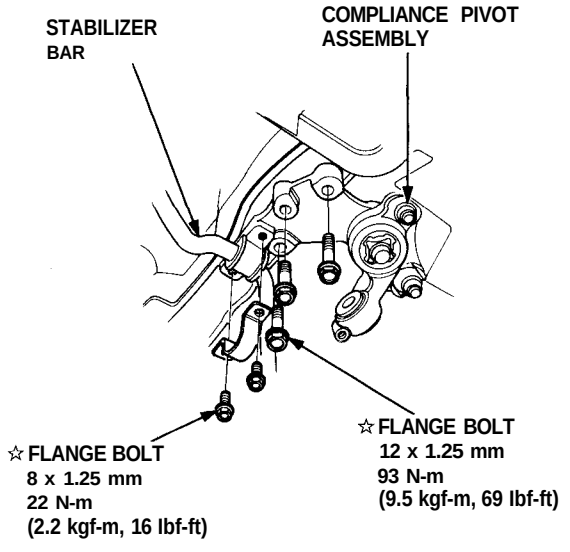

☆: Corrosion resistant bolt/nut

30. Remove the three lower compliance pivot bolts.

31. Remove the compliance pivot assembly by removing the bolts and nuts shown.

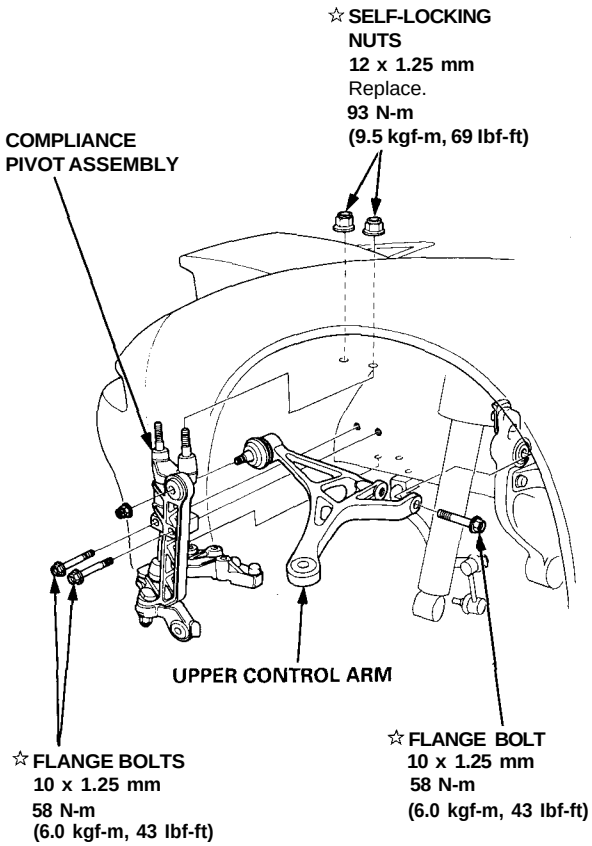

☆: Corrosion resistant bolt/nut

32. Remove the upper control arm assembly by removing the flange bolt shown.

NOTE:

- **Install the upper control arm on the frame before installing the compliance pivot assembly.**
- **Install the compliance pivot bolts and nuts. Torque them to the specified torque in the order.**

1. Loosely tighten the flange bolt (①).

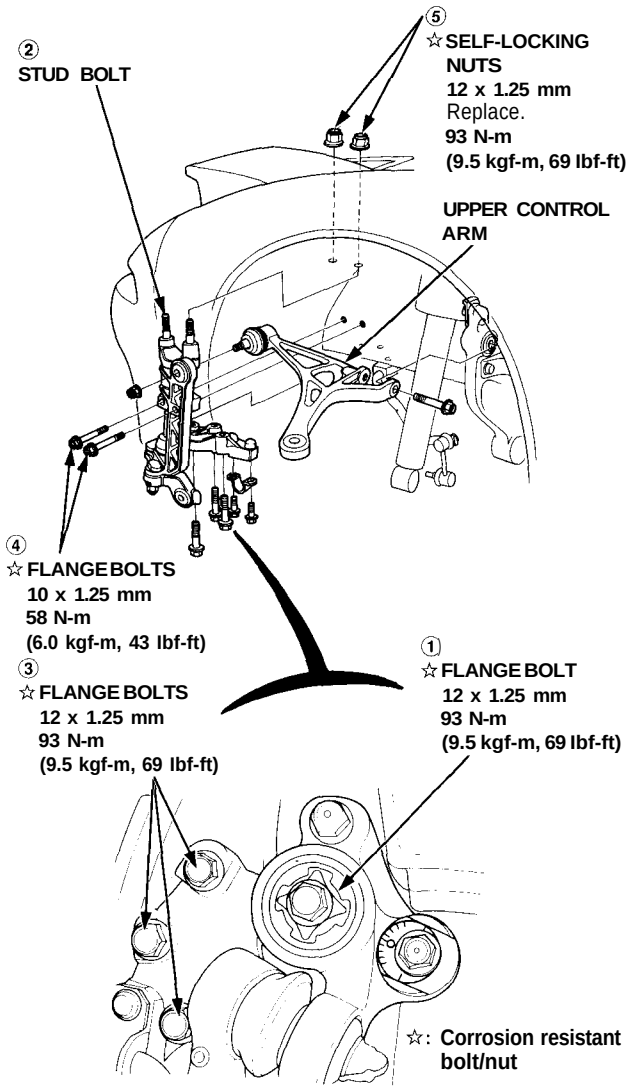

☆: Corrosion resistant bolt/nut

2. Insert the stud bolts (②) into the frame.
3. Install the three flange bolts (③) and tighten to the specified torque.
4. Install the two flange bolts (④) and tighten to the specified torque.
5. Tighten the flange bolt (①).
6. Install the 12 mm self-locking nuts (⑤) and tighten to the specified torque.

Knuckle/Control Arms/Compliance Pivot

Ball Joint Boot Replacement

NOTE: The upper control arm ball joint, lower control arm ball joint and knuckle upper ball joint are attached with the boot retainer to improve the sealing efficiency of the boot.

1. Remove the set ring and boot.

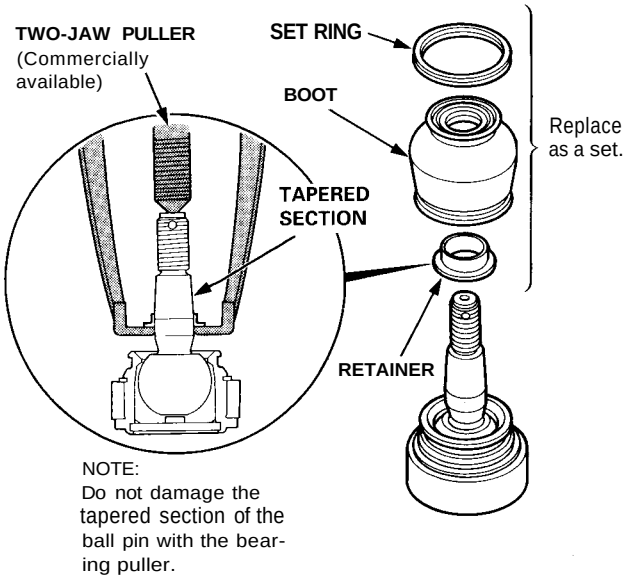

2. Remove the retainer.

   NOTE: The knuckle lower ball joint does not have a retainer.

3. Pack the interior of the boot and lip with grease.

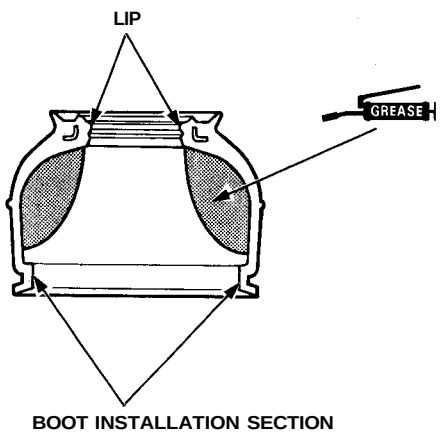

CAUTION: Do not contaminate the boot installation section with grease.

4. Wipe the grease off the sliding surface of the ball pin, and pack with fresh grease.

5. Insert the new retainer lightly into the ball joint pin.

   NOTE: When installing the ball joint, press the retainer into the ball joint pin.

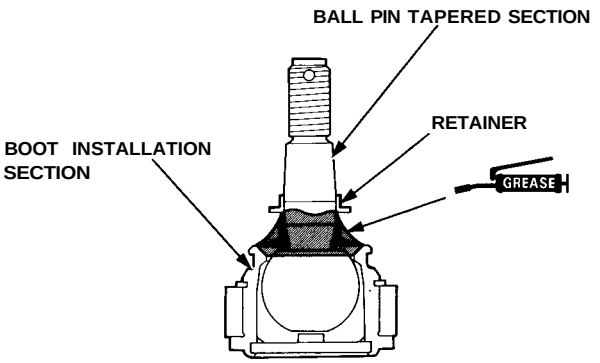

CAUTION:
- **Keep grease off the boot installation section and the tapered section of the ball pin.**
- **Do not allow dust, dirt, or other foreign materials to enter the boot.**

6. Install the boot in the groove of the boot installation section securely, then bleed air.

7. Adjust the special tool with the adjusting bolt until the end of the tool aligns with the groove on the boot.

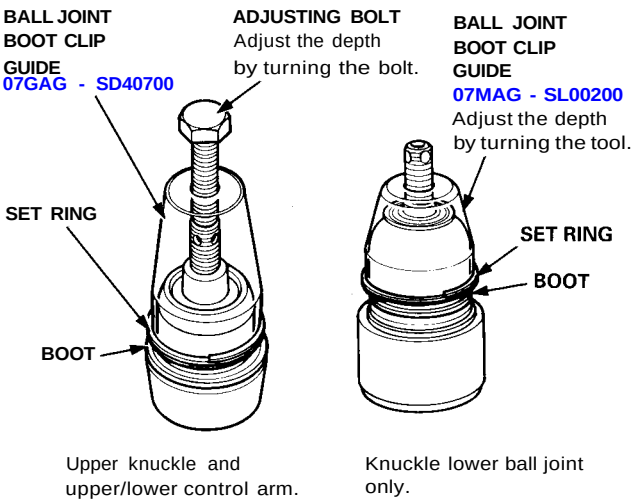

Upper knuckle and upper/lower control arm.

Knuckle lower ball joint only.

8. Slide the set ring over the tool and into position.

CAUTION: After installing the boot, check the ball pin tapered section and threads for grease contamination and wipe them if necessary.

Front Damper

Removal

1. Remove the front wheel.
2. Remove the brake hose mounting bolt from the damper.

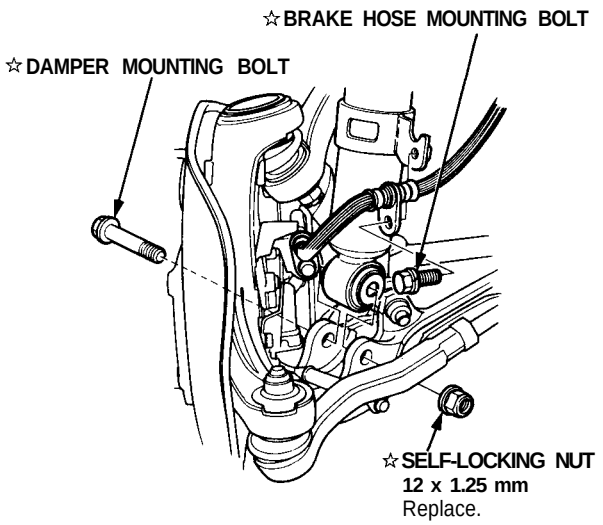

☆: **Corrosion resistant bolt/nut**

3. Separate the damper and lower arm by removing the damper mounting bolt.
4. Remove the caps from the top of the cowl, then remove the self-locking nuts.

☆: **Corrosion resistant bolt/nut**

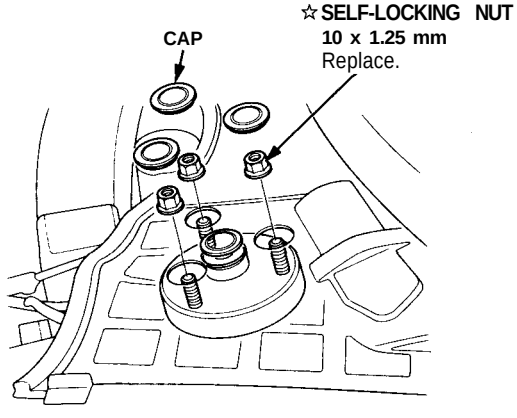

5. Remove the damper assembly.

Disassembly/Inspection

Disassembly:

1. Compress the damper spring with the spring compressor according to the manufacturer's instructions, then remove the self-locking nut.

CAUTION: Do not compress the spring more than necessary to remove the nut.

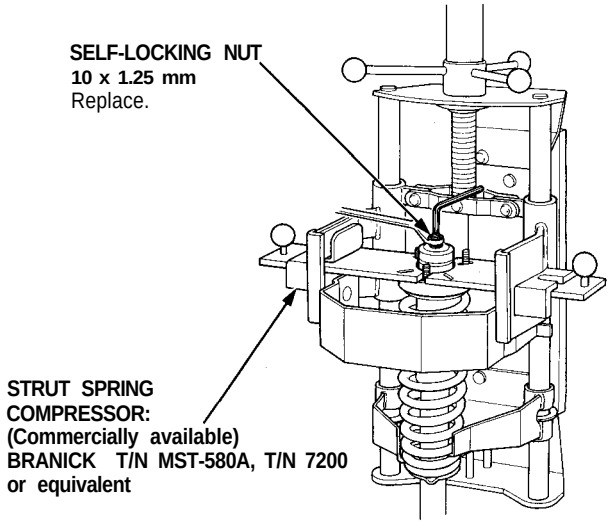

2. Remove the spring compressor, then disassemble the damper as shown on the next page.

Inspection:

1. Reassemble all parts, except the spring.
2. Push on the damper assembly and check for smooth operation through a full stroke, both compression and extension.

NOTE: The damper should move smoothly. If it does not (no compression or no extension), the gas is leaking, and the damper should be replaced.

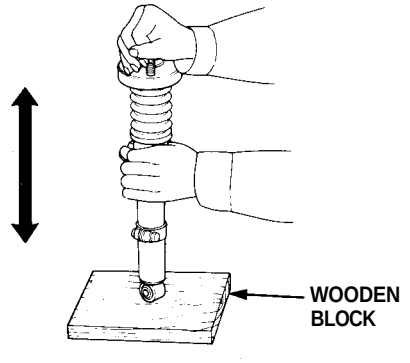

3. Check for oil leaks, abnormal noises or binding during these tests.

Front Damper

Inspection

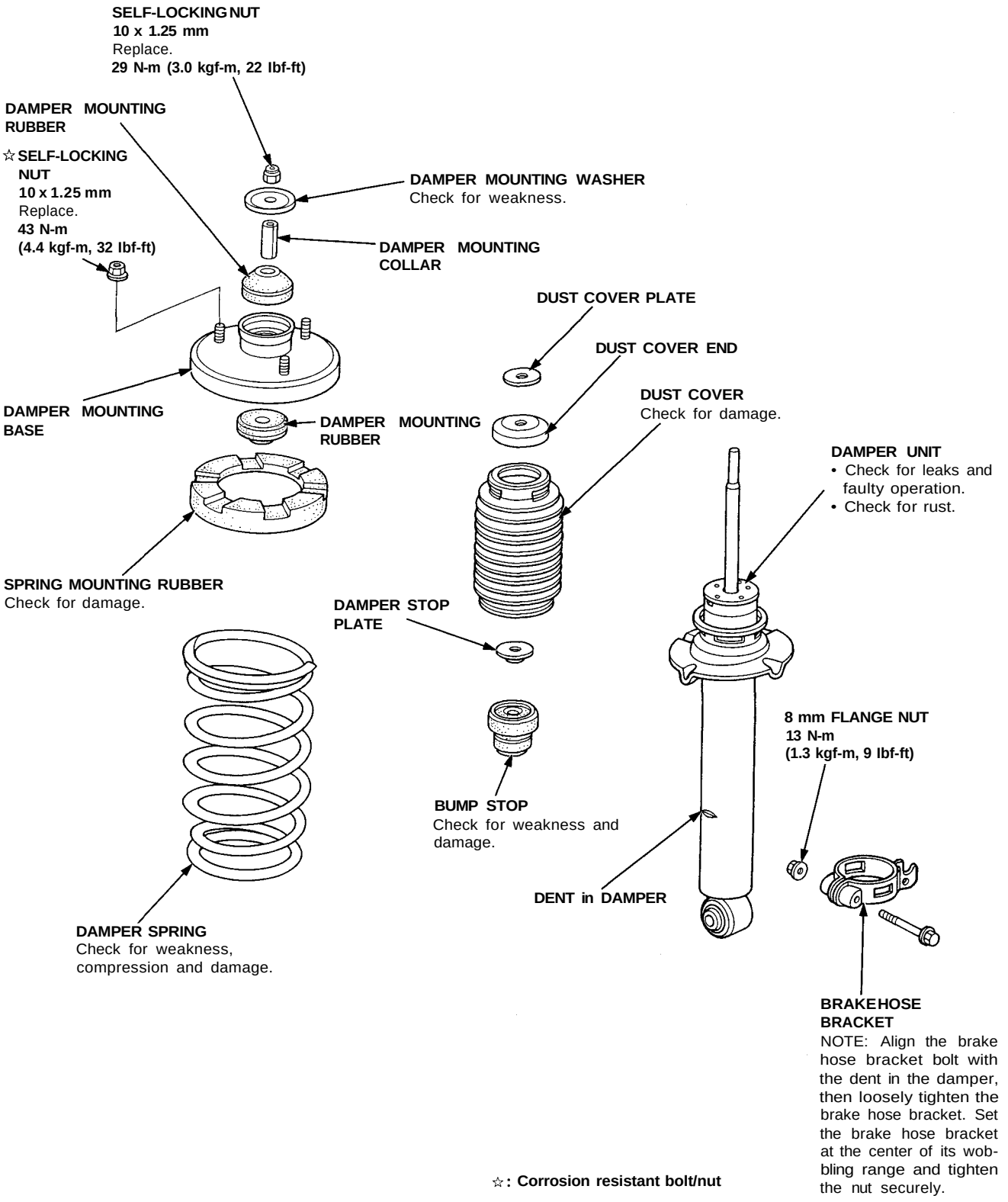

☆: **Corrosion resistant bolt/nut**

Reassembly

1. Install the damper unit on a spring compressor.
2. Assemble the damper in reverse order of removal except the damper mounting washer and self-locking nut.

   NOTE: Align the bottom of damper spring and spring lower seat.

STRUT SPRING COMPRESSOR:
(Commercially available)
BRANICK® T/N MST-580A, T/N 7200,
or equivalent

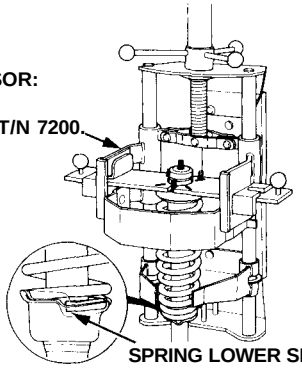

3. Position the damper mounting base on the damper unit as shown.

   NOTE: Follow the manufacturer's instructions

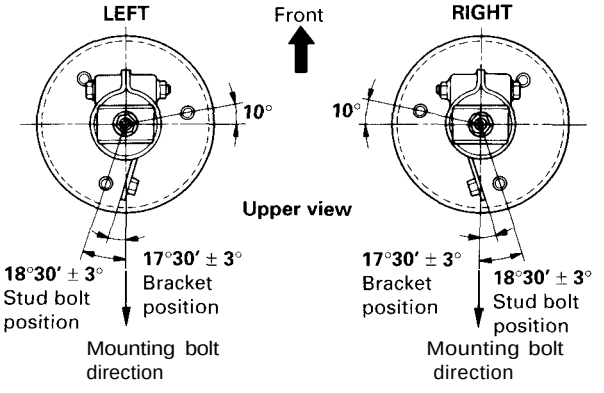

4. Compress the damper spring.

   CAUTION: Do not compress the spring more than necessary to install the nut.

5. Install the damper mount washer and a new self-locking nut.
6. Hold the damper shaft, then tighten the self-locking nut.

SELF-LOCKING NUT
10 x 1.25 mm
Replace.
29 N-m (3.0 kgf-m, 22 lbf-ft)

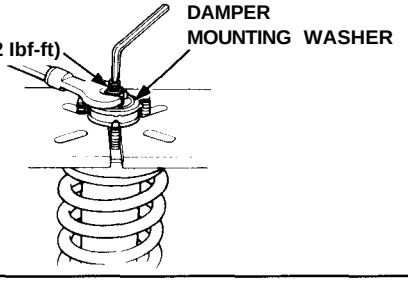

Installation

1. Reposition the damper on the frame with the welded nut of the hose bracket facing outside.

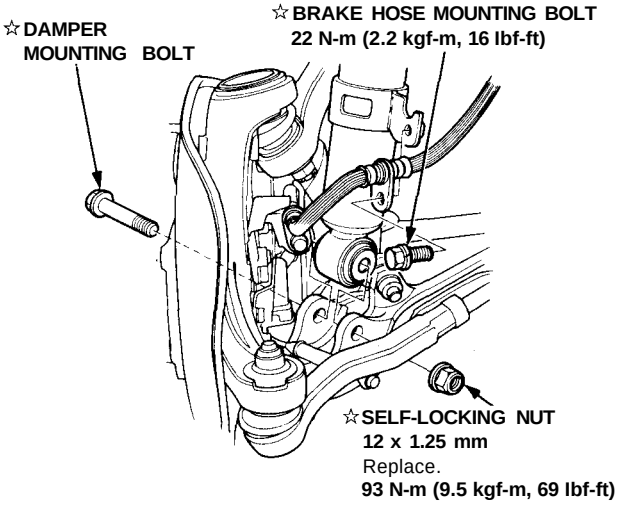

☆: Corrosion resistant bolt/nut

2. Install the damper end on the lower arm, then loosely tighten the mounting nut.

   NOTE: The bolts and nuts should be tightened with the vehicle's weight on the damper.

3. Secure the damper mounting bolt using a new self-locking nut.
4. Secure the damper assembly to the frame with the new three self-locking nuts.

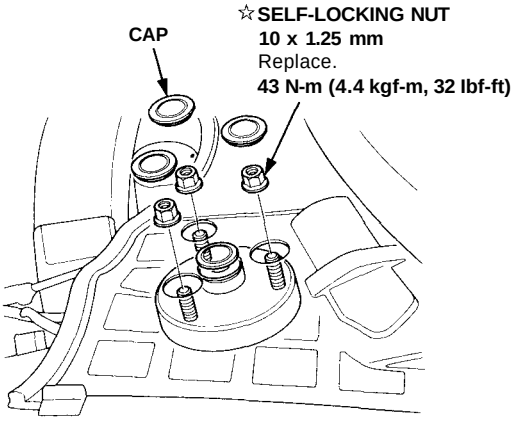

☆: Corrosion resistant bolt/nut

5. Install the caps in the top of the cowl.
6. Install the brake hose mounting bolt.

Rear Suspension

Torque Specifications

CAUTION:

- **Replace the self-locking nuts after removal.**
- **Replace the self-locking bolts if you can easily thread a non-self-locking nut past their nylon locking inserts. (It should require 1 N-m (0.1 kgf-m, 0.7 lbf-ft) of torque to turn the test nut on the bolt).**
- **The vehicle should be on the ground before any bolts or nuts connected to rubber mounts or bushings are tightened.**
- **Torque the castle nut to the lower torque specification, then tighten it only far enough to align the slot with the pin hole. Do not align the nut by loosening.**

NOTE: Wipe off the dirt, oil or grease on the threads before tightening the fasteners.

☆: **Corrosion resistant bolt/nut**

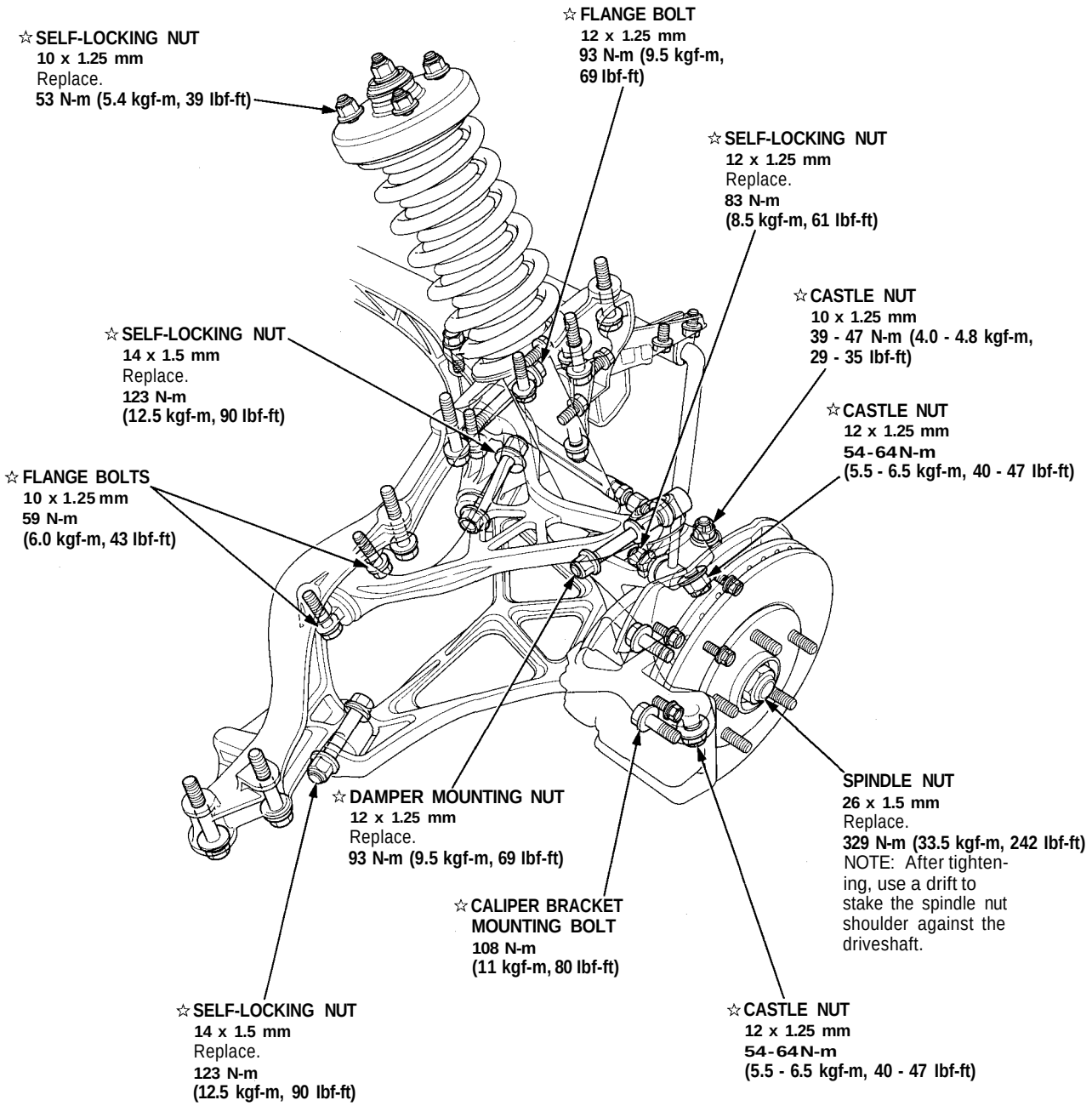

Hub Replacement

NOTE:

- Use only genuine Honda wheel weights for aluminum wheels. Non-genuine wheel weights may corrode and damage the aluminum wheels.
- On the aluminum wheels, remove the center cap from inside of the wheel after removing the wheel.
- Before installing the brake disc, clean the mating surface of the rear hub and inside of the brake disc.
- Before installing the wheel, clean the mating surfaces of the brake disc and inside of the wheel.

☆: **Corrosion resistant bolt/nut**

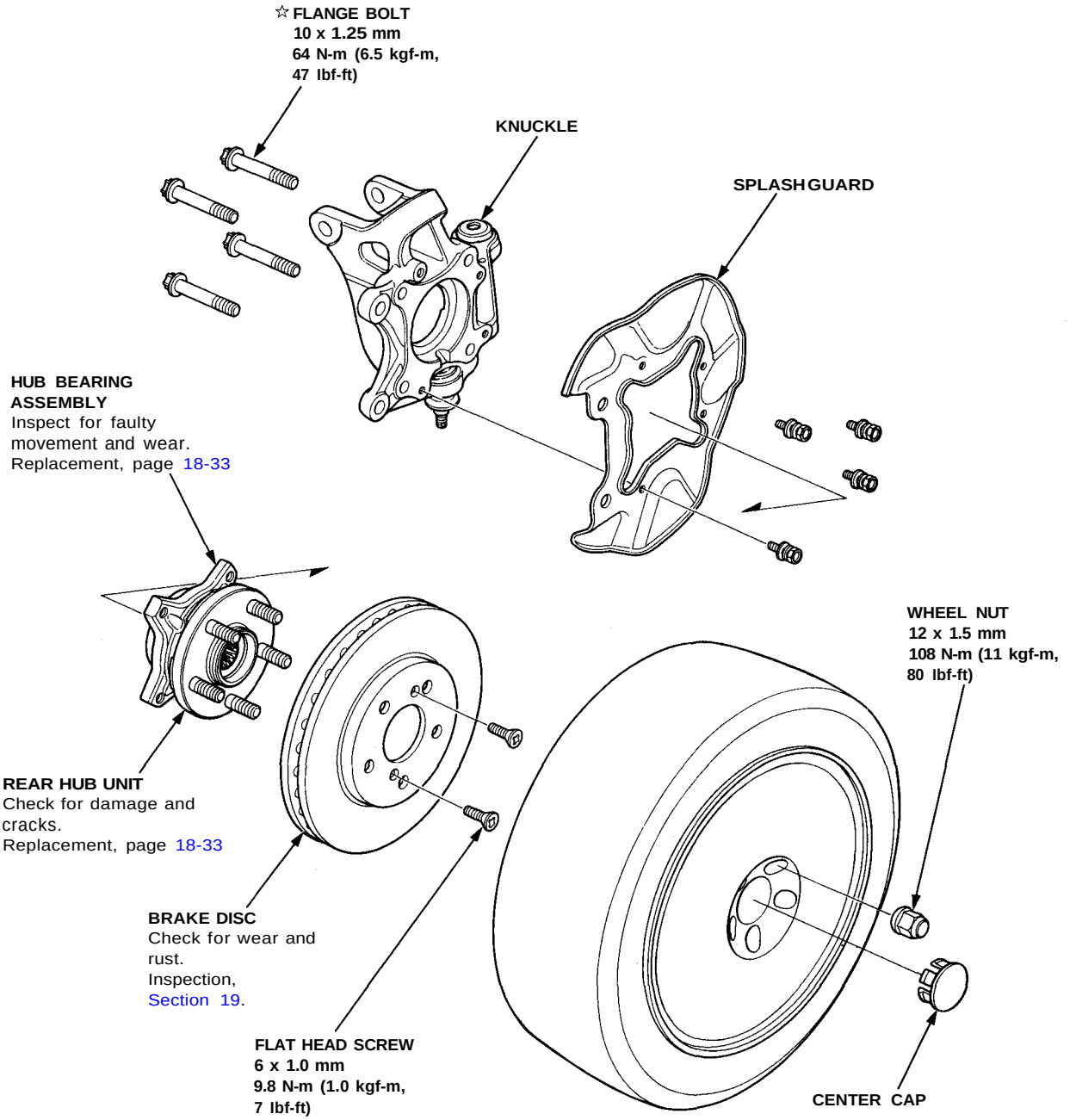

(cont'd)

Hub Replacement (cont'd)

1. Remove the center cap, then pry the spindle nut lock tab away from the spindle and loosen the nut.

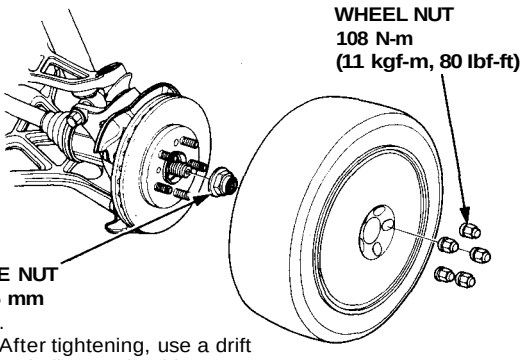

2. Raise the vehicle, and support it with safety stands (see Section 1).

3. Remove the rear wheels.

   NOTE: Before installing the wheel, clean the mating surfaces of the brake disc and inside of the wheel.

4. Remove the spindle nut.

5. Remove the wheel sensor from the knuckle and the rear of the lower control arm, then secure the wheel sensor wire to the suspension arm.

   NOTE:
   - Do not disconnect the wheel sensor.
   - Be careful when installing the sensors to avoid twisting wires.

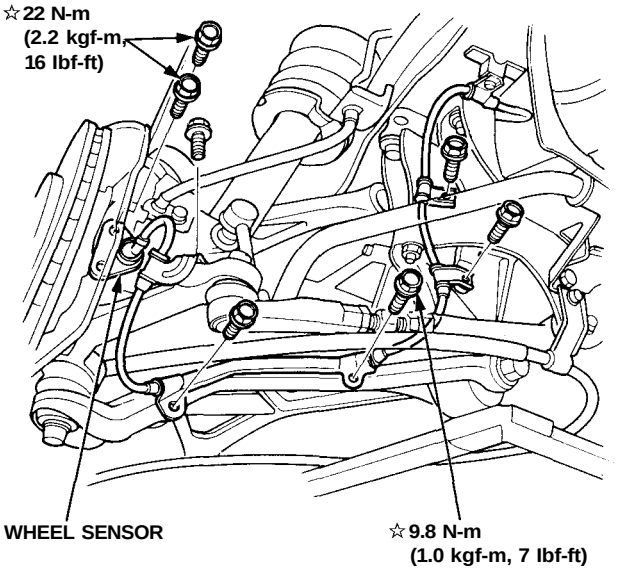

☆: **Corrosion resistant bolt/nut**

6. Remove the banjo bolt and disconnect the brake hose, then remove the brake hose clamp from the knuckle.

   CAUTION: Avoid spilling brake fluid on painted, plastic or rubber surfaces as it can damage the finish; wash spilled brake fluid off immediately with clean water.

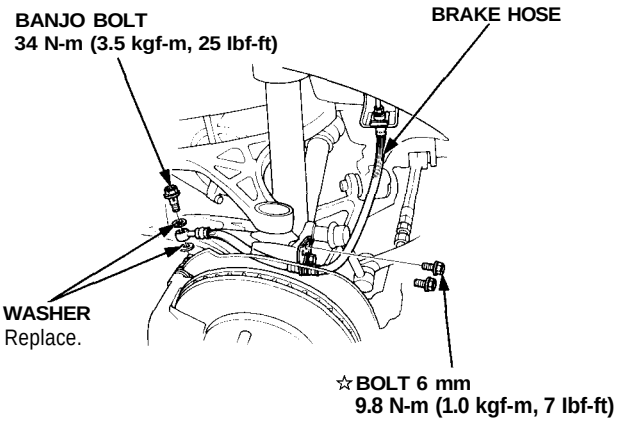

☆: **Corrosion resistant bolt/nut**

7. Remove the rear caliper by removing the mounting bolts.

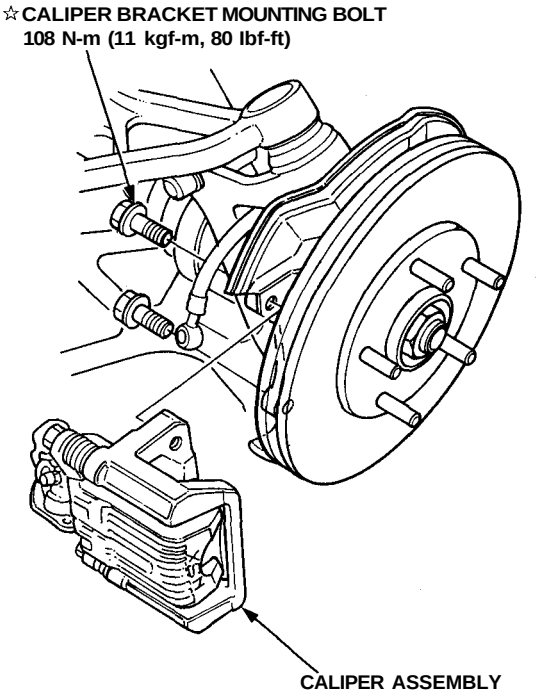

☆: **Corrosion resistant bolt/nut**

8. Remove the flat head screws. Install two 8 x 12 mm bolts into the disc to push it away from the hub.

NOTE: Turn each bolt two turns at a time to prevent cocking the disc excessively.

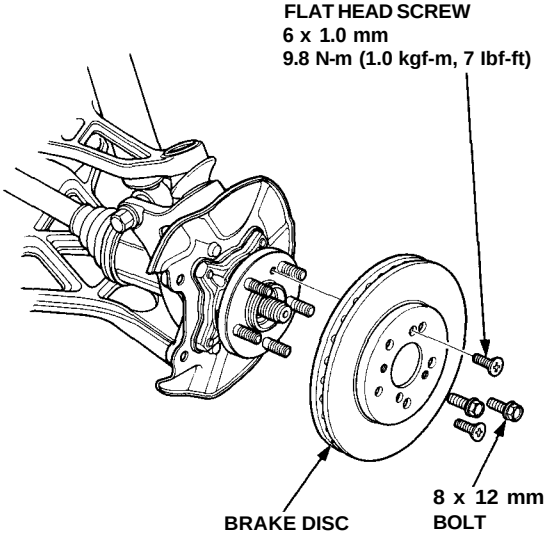

9. Remove the rear hub unit from the knuckle.

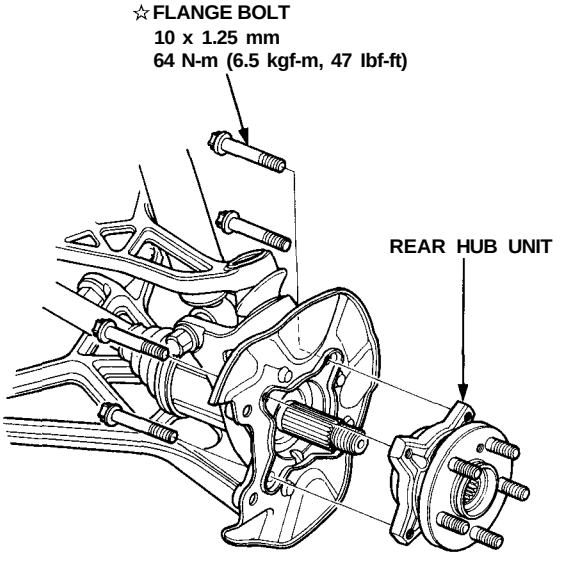

Corrosion resistant bolt/nut

Rear Wheel Bearing Replacement:

1. Separate the wheel bearing from the hub using the special tools and a press.

CAUTION: Hold onto the hub to keep it from falling when pressed clear.

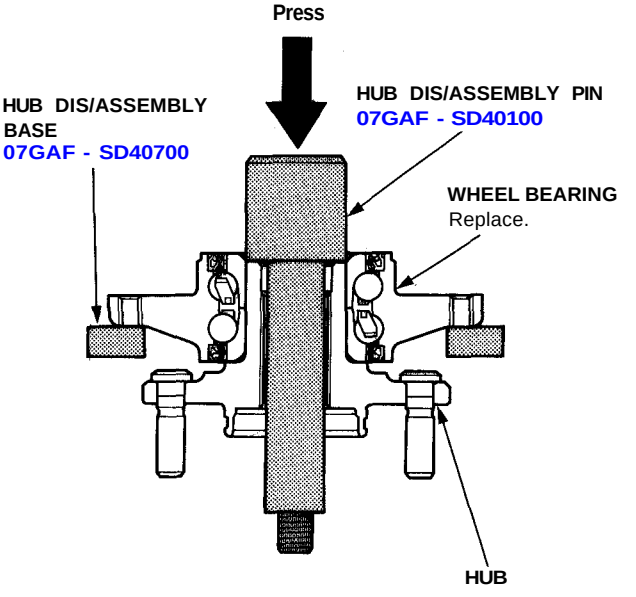

2. Remove the wheel bearing inner race from the hub using the special tool and a press.

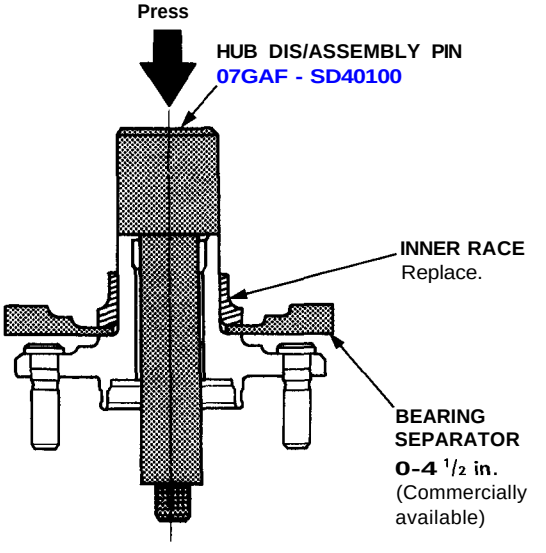

NOTE: Wash the bearing and hub thoroughly in high flash point solvent before reassembly.

(cont'd)

Hub Replacement (cont'd)

NOTE: Replace the bearing with a new one after removal.

3. Press a new wheel bearing onto the hub using the special tools and a press.

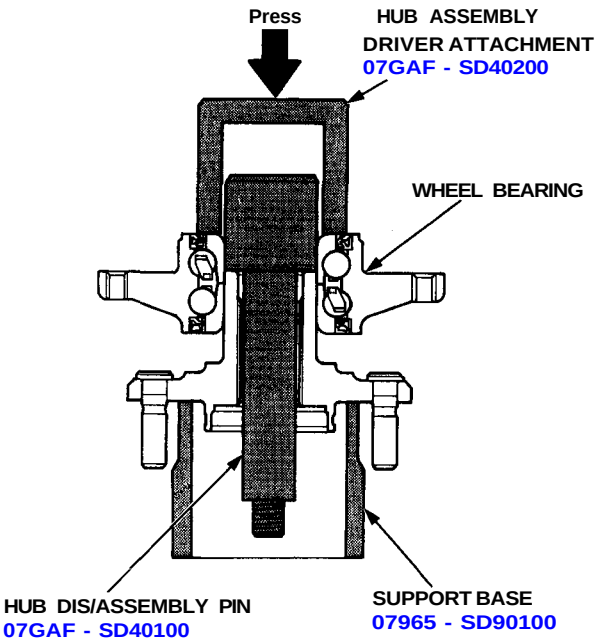

4. Install the hub in reverse order of removal.

Knuckle/Control Arms

Illustrated Index

Overall Suspension

NOTE:
- Wipe off the grease before tightening the nut at the ball joint.
- Torque specifications, see page 18-30.
- Align the white line on the stabilizer bar with the bushing end, and install the stabilizer bar.

☆: Corrosion resistant bolt/nut

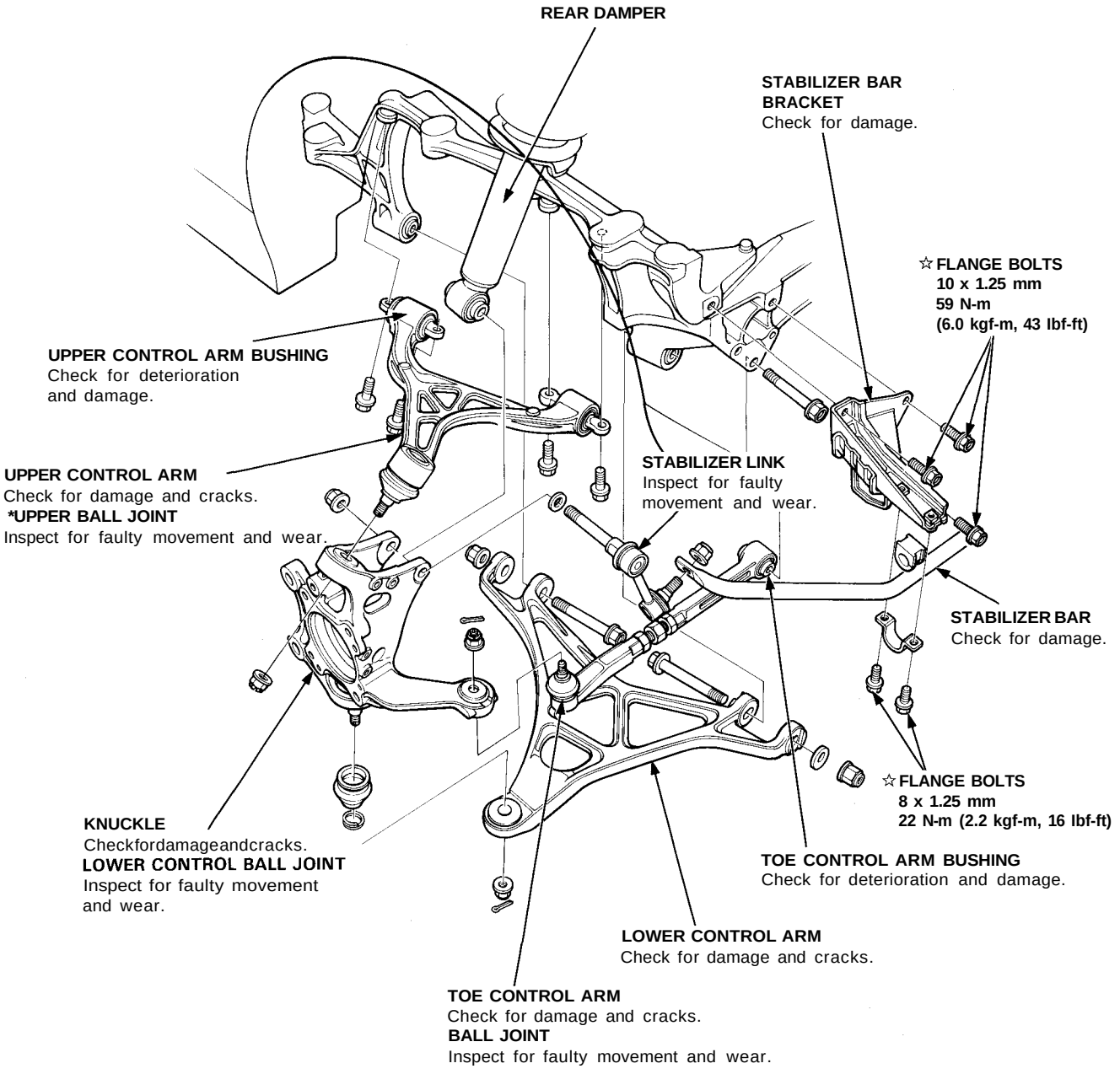

NOTE: Replace the joint boot if damaged. The parts marked with an asterisk (*) have a retainer attaching the ball joints. Replace the retainer whenever the boot is replaced.

CAUTION:
- **Do not remove the arms and knuckle by striking them with a hammer, and take care not to drop them.**
- **Make sure that the reference marks on the toe control arm are aligned.**

Knuckle/Control Arms

Removal

1. Remove the rear wheel and bearing unit assembly (see page 18-31).

2. Remove the splash guard from the knuckle.

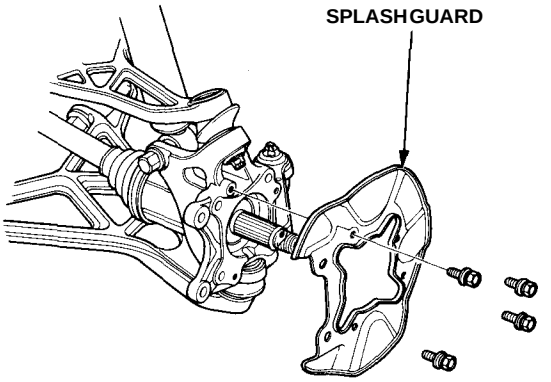

3. Remove the cotter pin from the castle nut of the toe control arm.

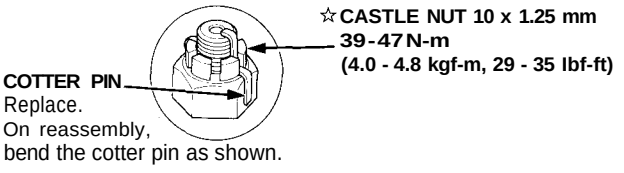

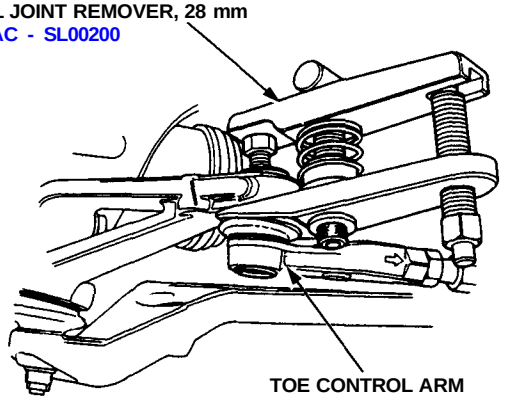

☆: **Corrosion resistant bolt/nut**

4. Install the 10 mm hex nut on the ball joint. Be sure that the 10 mm hex nut is flush with the ball joint pin end, or the threaded section of the ball joint pin might be damaged by the ball joint remover.

5. Use the ball joint remover, 28 mm, as shown on page 18-21 to separate the ball joint and toe control arm.

CAUTION: Be careful not to damage the ball joint boot.

6. Hold the damper lower mount of stabilizer link with a wrench, then remove the damper mounting nut.

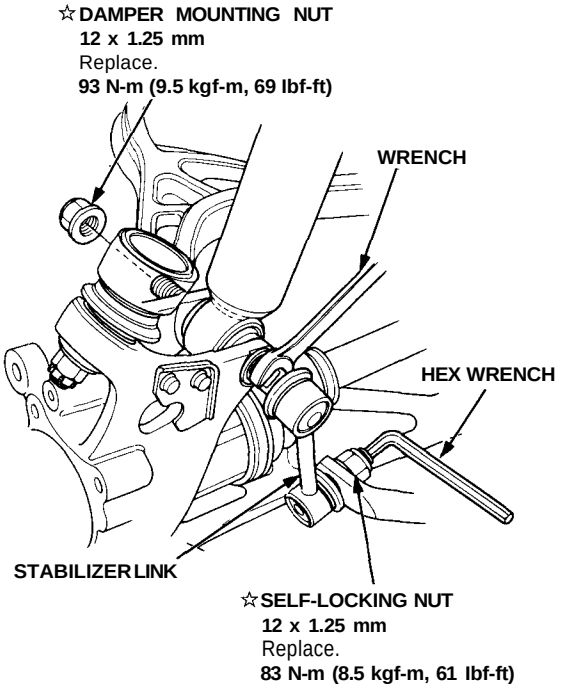

☆: **Corrosion resistant bolt/nut**

7. Hold the ball pin of the stabilizer link with a hex wrench, then loosen the self-locking nut.

8. Remove the self-locking nut, then remove the stabilizer link from the stabilizer bar and knuckle.

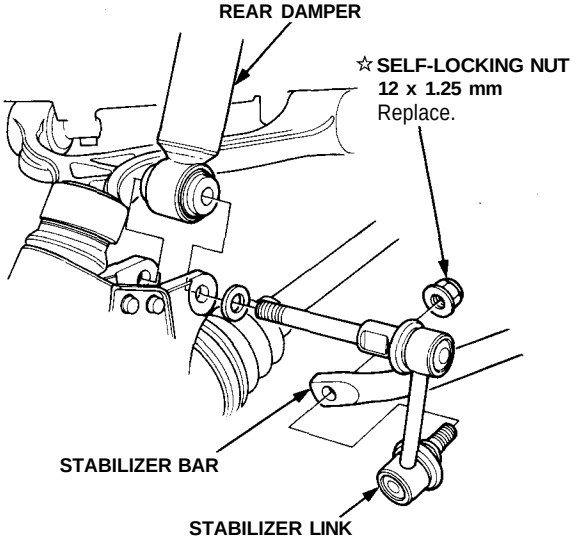

☆: **Corrosion resistant bolt/nut**

9. Remove the cotter pin from the castle nut of the lower control arm ball joint, and remove the nut.

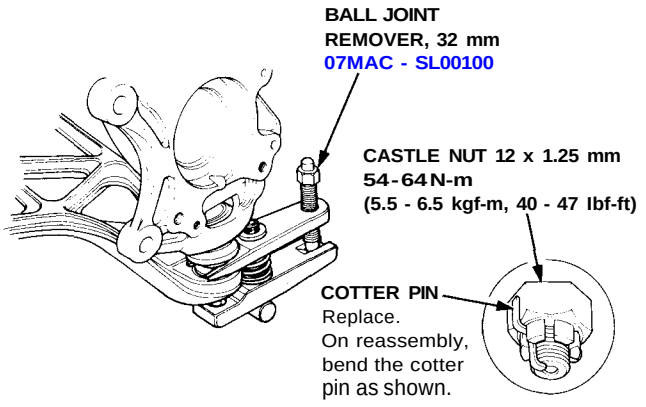

☆: **Corrosion resistant bolt/nut**

10. Install the 12 mm hex nut on the ball joint. Be sure that the 12 mm hex nut is flush with the ball joint pin end, or the threaded section of the ball joint pin might be damaged by the ball joint remover.

11. Use the ball joint remover, 32 mm, as shown on page 18-21 to separate the ball joint and lower control arm.

CAUTION: Avoid damaging the ball joint boot.

12. Remove the cotter pin from the castle nut of the upper control arm ball joint, and remove the nut.

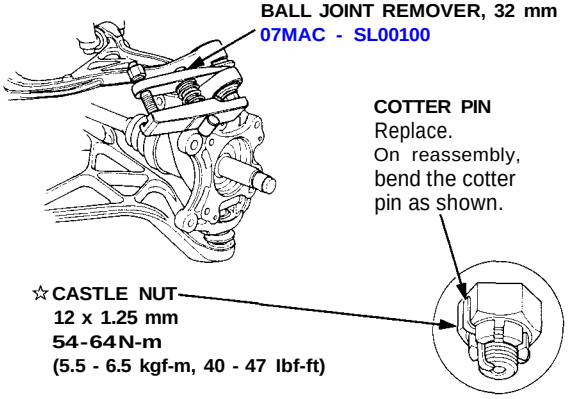

☆: **Corrosion resistant bolt/nut**

13. Install the 12 mm hex nut on the ball joint. Be sure that the 12 mm hex nut is flush with the ball joint pin end, or the threaded section of the ball joint pin might be damaged by the ball joint remover.

14. Use the ball joint remover, 32 mm, as shown on page 18-21 to separate the ball joint and upper control arm.

CAUTION: Avoid damaging the ball joint boot.

15. Separate the knuckle from the upper control arm and driveshaft outboard joint.

NOTE: Do not remove the driveshafts from the differential case or intermediate shaft.

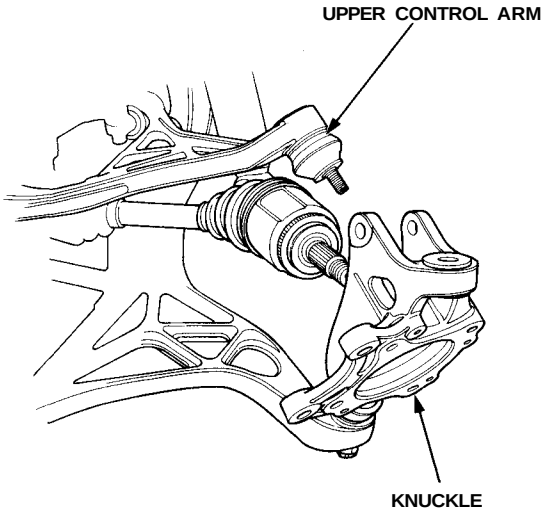

NOTE: Tie plastic bags over the driveshaft ends.

16. Remove the knuckle from the lower control arm.

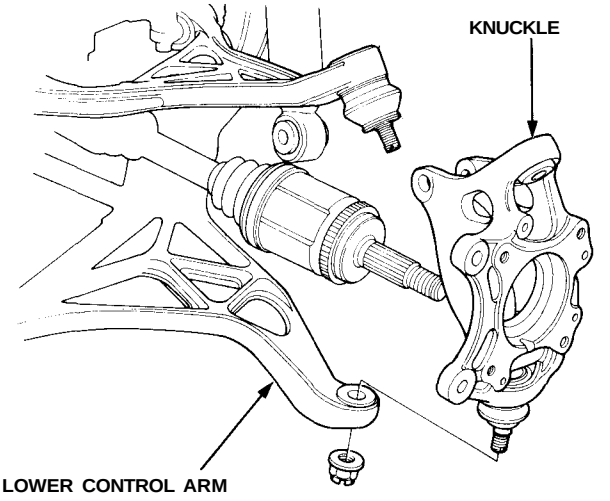

(cont'd)

Removal (cont'd)

17. Remove the lower control arm by removing the adjusting bolt and flange bolt.

☆: Corrosion resistant bolt/nut

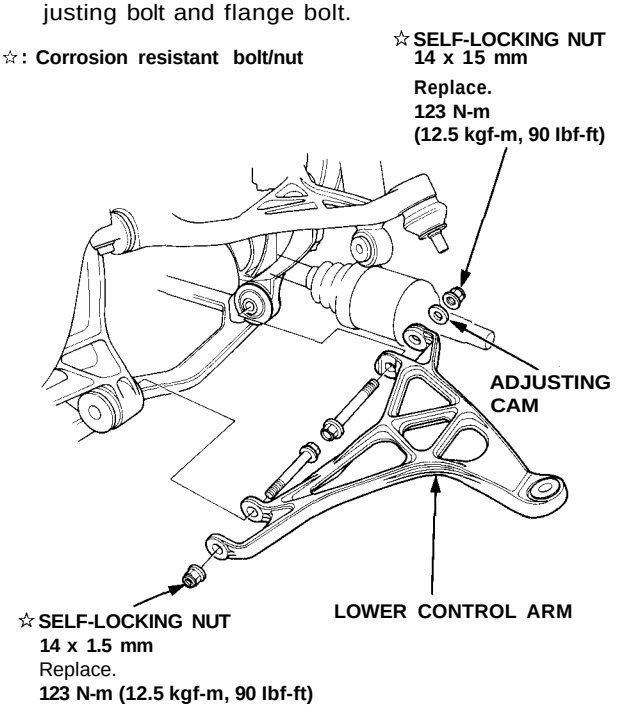

18. Remove the upper control arm by removing the flange bolts.

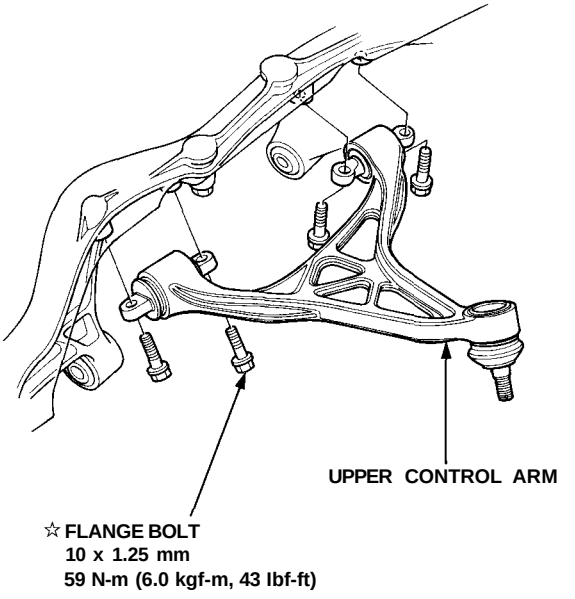

☆: Corrosion resistant bolt/nut

19. Remove the toe control arm.

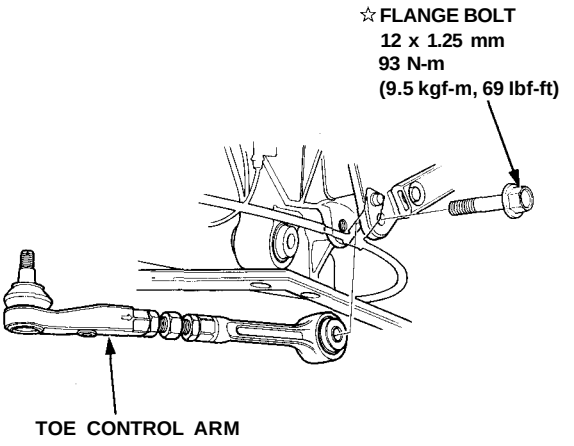

☆: Corrosion resistant bolt/nut

CAUTION: Make sure that the reference marks on the toe control arm are aligned.

Ball Joint Boot Replacement

NOTE: The upper control arm ball joint is attached with the boot retainer to improve the sealing efficiency of the boot.

1. Remove the set ring and boot.

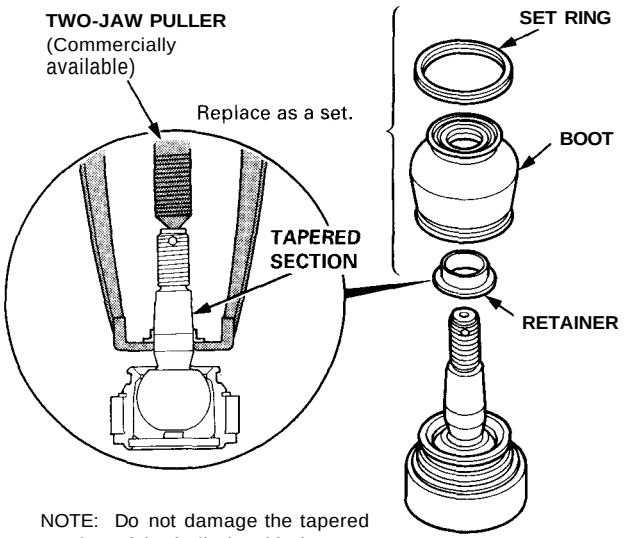

NOTE: Do not damage the tapered section of the ball pin with the bearing puller.

2. Remove the retainer (upper ball joint only).

3. Pack the interior of the boot and lip with grease.

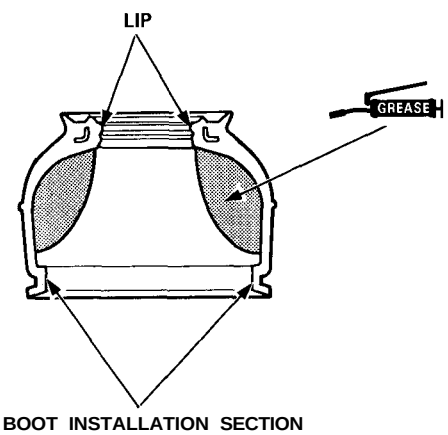

CAUTION: Do not contaminate the boot installation section with grease.

4. Wipe the grease off the sliding surface of the ball pin, and pack with fresh grease (upper ball joint only).

5. Insert the new retainer lightly into the ball joint pin.

   NOTE: When installing the ball joint, press fit the retainer into the ball joint pin.

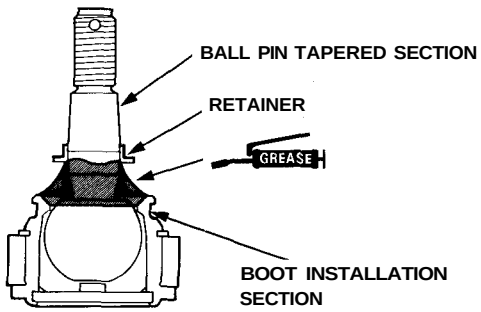

CAUTION:
- **Keep grease off the boot installation section and the tapered section of the ball pin.**
- **Do not allow dust, dirt, or other foreign materials to enter the boot.**

6. Install the boot in the groove of the boot installation section securely, then bleed air.

7. Adjust the special tool with the adjusting bolt until the end of the tool aligns with the groove on the boot.

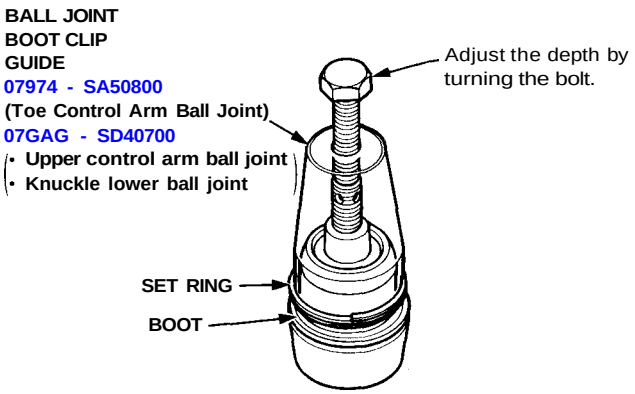

8. Slide the set ring over the tool and into position.

CAUTION: After installing the boot, check the ball pin tapered section and threads for grease contamination and wipe them if necessary.

Rear Damper

Removal

1. Remove the rear wheels.
2. Remove the lower rear hatch glass trim.

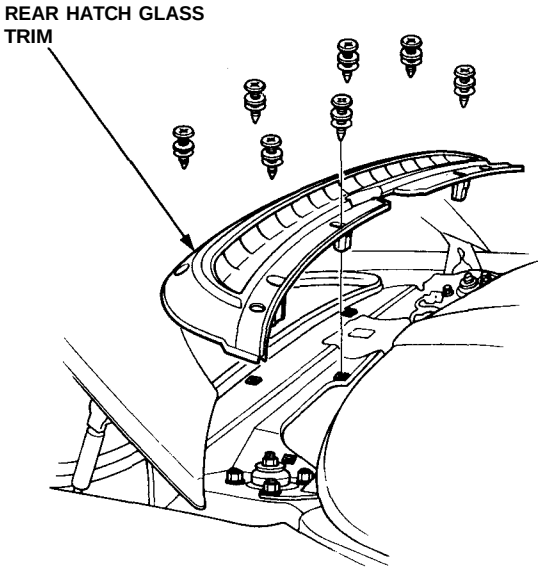

3. For NSX-T, remove the engine cover support rod from the strut brace, then position the end of the rod on the window lock mechanism to support the engine cover.

   NOTE: To prevent damage to the window lock mechanism, place a shop towel over the mechanism.

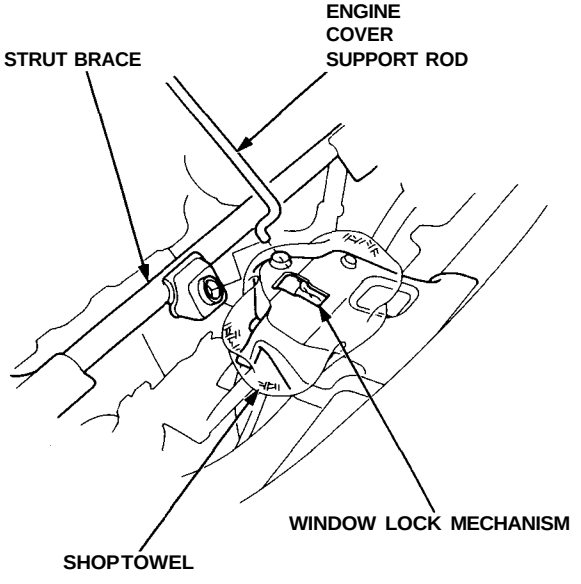

4. Remove the three self-locking nuts.

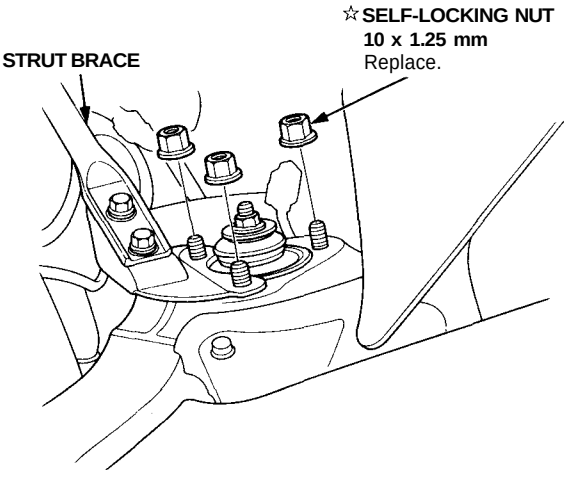

☆: **Corrosion resistant bolt/nut**

5. Remove the rear strut brace (NSX-T model only).
6. Hold the damper lower mount of stabilizer link with a wrench, then remove the damper mounting nut.

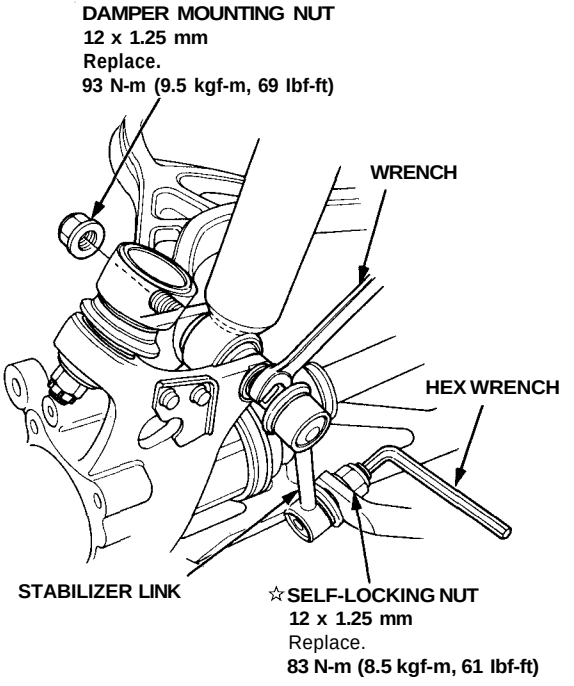

☆: **Corrosion resistant bolt/nut**

7. Hold the ball pin of the stabilizer link with a hex wrench, then loosen the self-locking nut.

8. Remove the self-locking nut, then remove the stabilizer link from the stabilizer bar and knuckle.

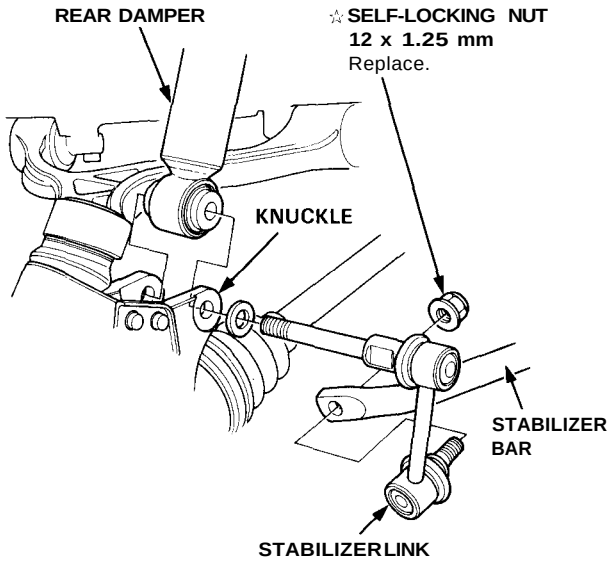

☆: **Corrosion resistant bolt/nut**

Rear Damper

Disassembly/Inspection

Disassembly:

1. Compress the damper spring with the spring compressor according to the manufacturer's instructions, then remove the self-locking nut.

   CAUTION: Do not compress the spring more than necessary to remove the nut.

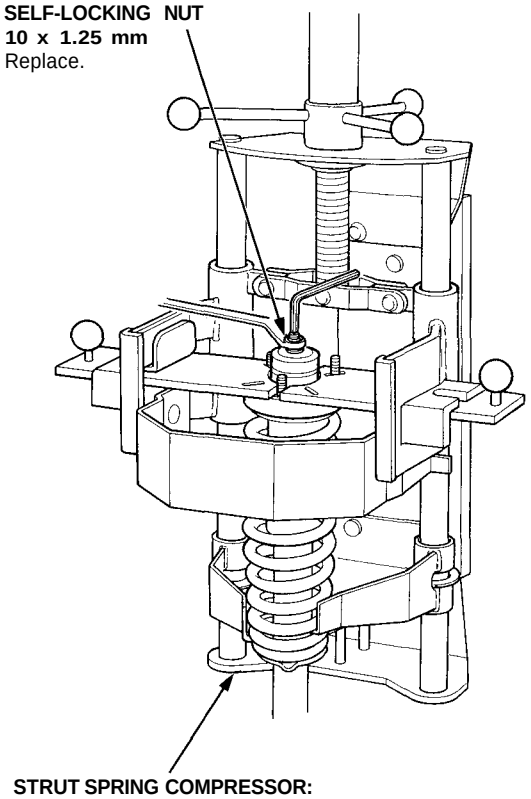

2. Remove the spring compressor, then disassemble the damper as shown on the next page.

Inspection:

1. Reassemble all parts, except the spring.

2. Push on the damper assembly and check for smooth operation through a full stroke, both compression and extension.

   NOTE: The damper should move smoothly.
   If it does not (no compression or no extension), the gas is leaking, and the damper should be replaced.

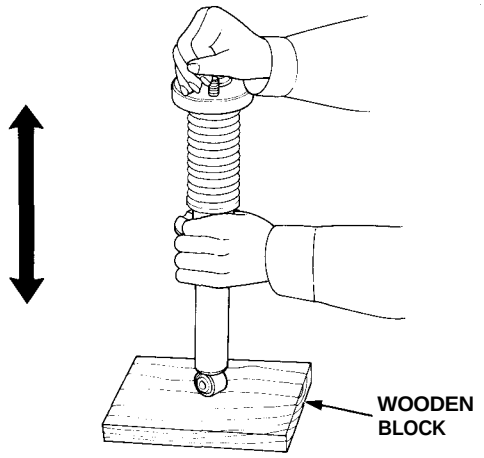

3. Check for oil leaks, abnormal noises or binding during these tests.

Inspection

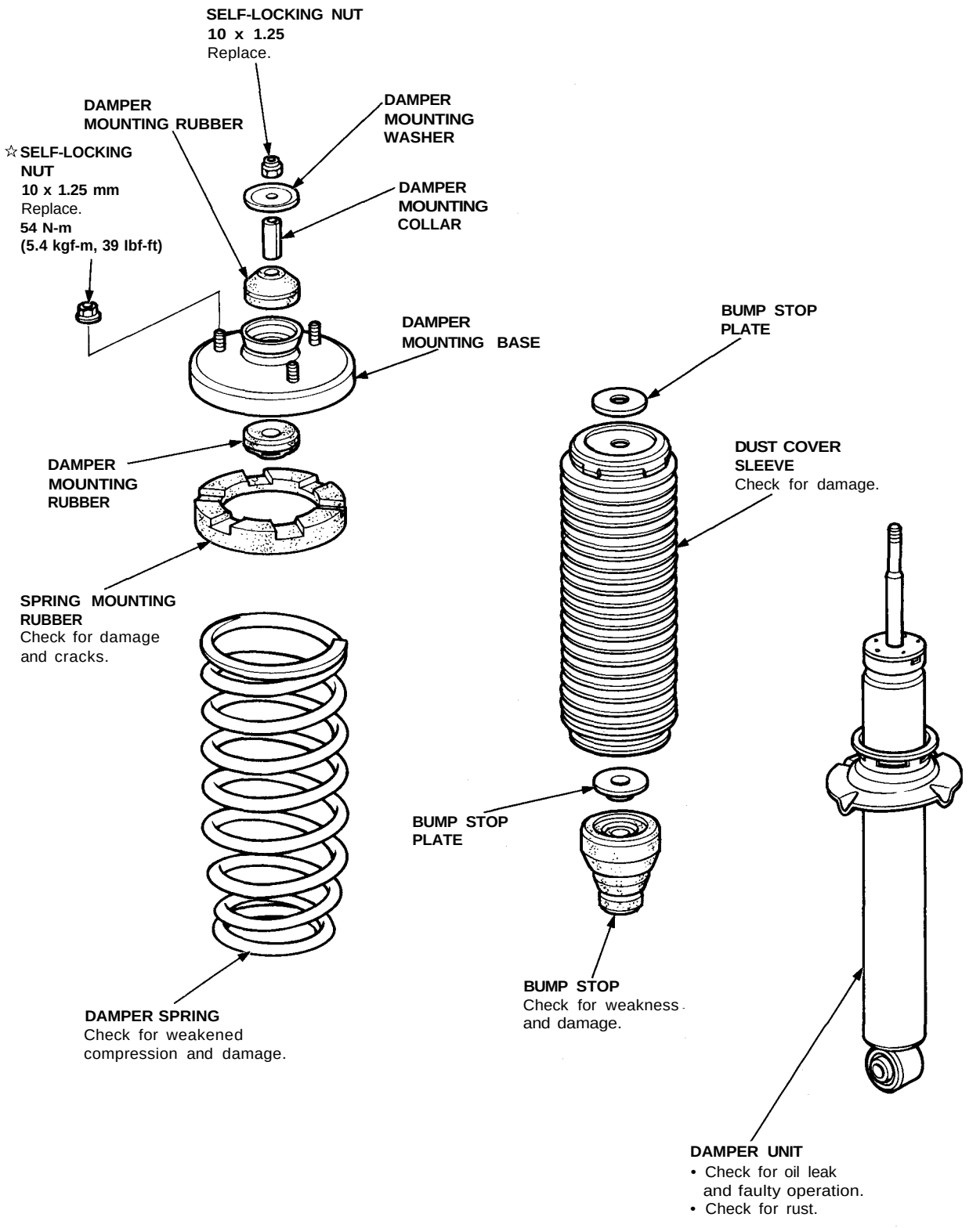

☆: **Corrosion resistant bolt/nut**

Rear Damper

Reassembly

1. Install the damper unit on a spring compressor.
2. Assemble the damper in reverse order of removal except the damper mounting washer and self-locking nut.
   NOTE: Align the bottom of damper spring and spring lower seat.

STRUT SPRING COMPRESSOR:
(Commercially available)
BRANICK T/N MST-580A, T/N 7200 or equivalent

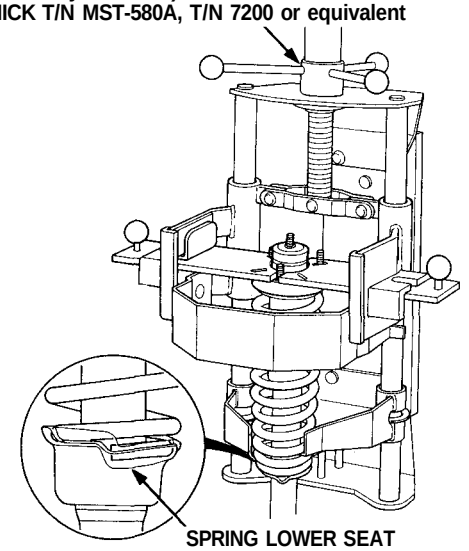

3. Position the damper mounting base so that the angle of the stud bolts is as shown.
   NOTE: Follow the manufacture's instructions.

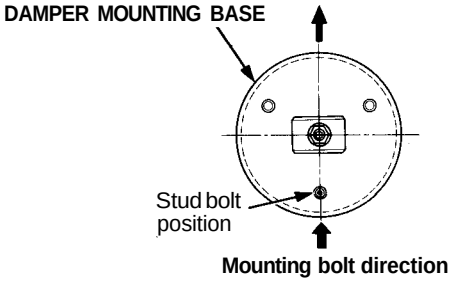

4. Compress the damper spring.
   CAUTION: Do not compress the spring more than necessary to install the self-locking nut.
5. Install the damper mounting rubber and damper mounting washer, and loosely install a new self-locking nut.
6. Hold the damper shaft, and tighten the self-locking nut.

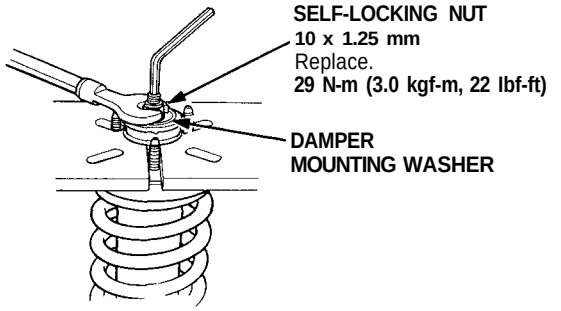

Installation

1. Reposition the damper assembly between the frame and knuckle.

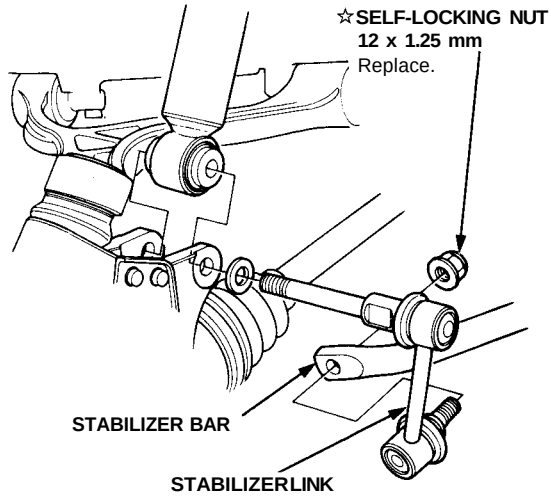

☆: Corrosion resistant bolt/nut

2. Install the stabilizer link and connect the stabilizer bar.

3. Loosely install a new self-locking nut.

4. Hold the ball pin of the stabilizer link with a hex wrench, then tighten the self-locking nut.

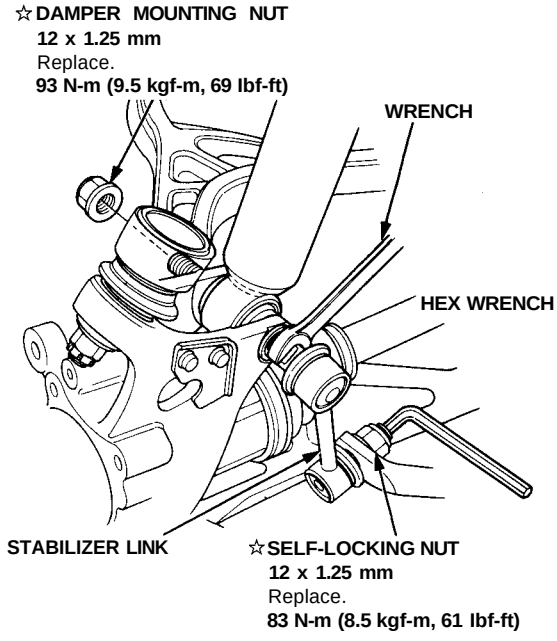

☆: Corrosion resistant bolt/nut

5. Loosely install a new damper mounting nut.

NOTE: The damper mounting nuts should be tightened with the damper under vehicle load.

6. Install the new self-locking nuts on the top of the damper assembly.

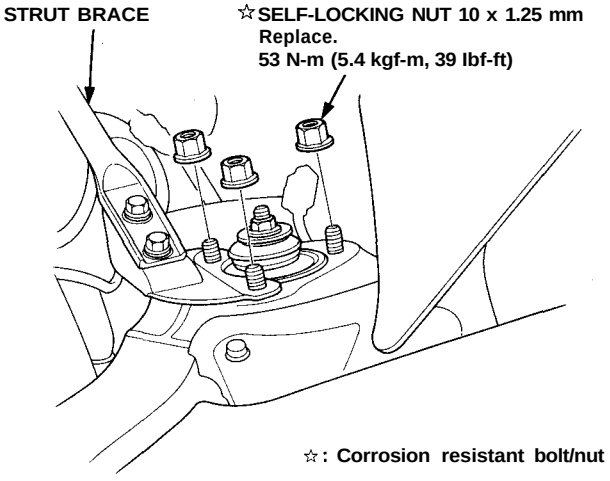

7. Tighten the damper mounting nut to the specified torque.

8. Secure the damper assembly to the frame with the self-locking nuts.

9. Install the strut brace (NSX-T model only).

10. Install the rear hatch glass trim.

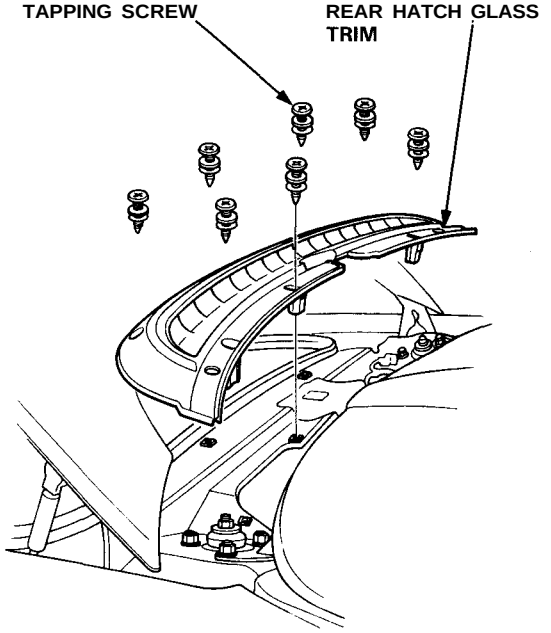

11. Install the engine cover support rod onto the strut brace.

12. Install the rear wheels.

Brakes

Conventional Brake

Special Tools 19-2
Component Location Index 19-3
Inspection and Adjustment
  Rubber Parts and Brake Booster 19-4
  Pedal Height 19-5
  Parking Brake 19-5
Front Brakes
  Index/Inspection 19-6
  Front Brake Pads Inspection/Replacement 19-7
Front Caliper
  Disassembly 19-9
  Reassembly 19-10
Front Brake Disc
  Runout Inspection 19-10
  Thickness and Parallelism Inspection 19-11
Bleeding 19-11
Master Cylinder and Brake Booster
  Index/Torque 19-13
  Master Cylinder Inspection . 19-14
  Brake Booster Tests 19-15
  Pushrod Clearance Adjustment 19-16
Rear Brakes
  Torque/Inspection 19-17
Rear Brake Pads
  Inspection/Replacement 19-18
Rear Brake Disc
  Runout Inspection 19-20
  Thickness and Parallelism Inspection 19-21
Rear Caliper
  Disassembly 19-21
  Reassembly 19-24
Brake Hoses/Lines
  Inspection 19-27
Parking Brake
  Disassembly/Reassembly ... 19-28

Anti-lock Brake System (ABS)

Features/Construction/Operation
  '97-99 Models 19-29
  '00-05 Models 19-3c
Component Locations
  '97-99 Models 19-38
  '00-05 Models 19-2c
ABS Control Unit Terminal Arrangement
  '97-99 Models 19-42
  '00-05 Models 19-6c
Troubleshooting Precautions
  '97-99 Models 19-46
  '00-05 Models 19-8c
Diagnostic Trouble Code (DTC) Indication
  '97-99 Models 19-48
  '00-05 Models 19-10c
DTC Clearing ('00-05 Models) 19-11c
Troubleshooting Index
  '97-99 Models 19-49
  '00-05 Models 19-12c
ABS Function Test 19-74
Hydraulic System
  Hydraulic Connections 19-76
  Relieving Accumulator/ Line Pressure 19-77
Modulator/Solenoid Unit
  Index/Torque 19-78
  Solenoid Leak Test 19-79
  Solenoid Flushing 19-80
ABS Modulator-Control Unit ('00-05 Models)
  Removal/Installation 19-29c
Power Unit
  Torque/Inspection 19-81
Accumulator/Pressure Switch
  Index/Torque 19-82
  Removal 19-83
  Accumulator Disposal 19-83
Bleeding
  Air Bleeding with ALB Checker 19-84
Electronic Components
  ABS Control Unit Replacement 19-85
  Relay Inspection 19-86
  ABS Indicator Relay ('00-05 Models) Inspection 19-30c
Pulsers/Sensors
  Inspection
    '97-99 Models 19-86
    '00-05 Models 19-30c
  Front Sensor Replacement 19-87
  Rear Sensor Replacement 19-87
  Wheel Sensor Replacement ('00-05 Models) 19-31c

Traction Control System (TCS)

Special Tools 19-90
Component Locations 19-91
System Description
  Outline 19-92
  Construction and Function 19-93
TCS Control Unit Terminal Arrangement 19-98
Troubleshooting
  TCS Indicator Light 19-100
  Troubleshooting Guide 19-102
Electronic Components
  TCS Switch Inspection 19-123
  Lateral Acceleration (Lg) Sensor Inspection 19-123
  Steering Angle Sensor Replacement 19-124
  TCS Control Unit Replacement 19-126

Special Tools

Ref. No.	Tool Number	Description	Qty	Page Reference
①	07HAA – SG00100 or 07HAA – SG00101	Bleeder T-Wrench	1	19-77, 19-79, 19-80, 19-84
②	07HAE – SG00100	Brake Spring Compressor	1	19-22, 19-25
③	07HAJ – SG0010A or 07HAJ – SG0010B	ALB Checker	1	19-42, 19-44, 19-79, 19-84
④	07JAG – SD40100	Pushrod Adjustment Gauge	1	19-16
⑤	07KAZ – 001000A	Auxillary Window Switch	1	19-80
⑥	07PAZ – 0010100	SCS Service Connector	1	19-48, 19-10c
⑦	07914 – SA50000	Snap Ring Pliers	1	19-22, 19-25

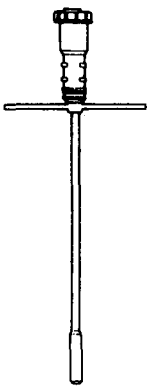

①

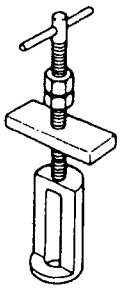

②

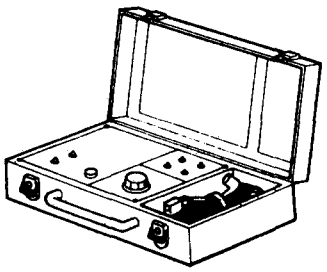

③

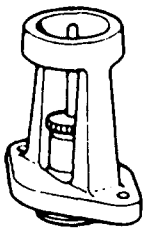

④

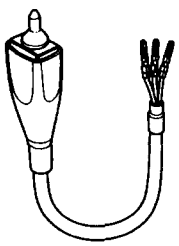

⑤

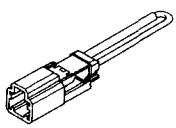

⑥

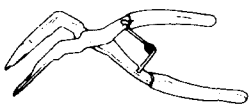

⑦

Illustrated Index

⚠ WARNING The accumulator contains high-pressure nitrogen gas; do not puncture, expose to flame or attempt to disassemble the accumulator or it may explode; severe personal injury may result.

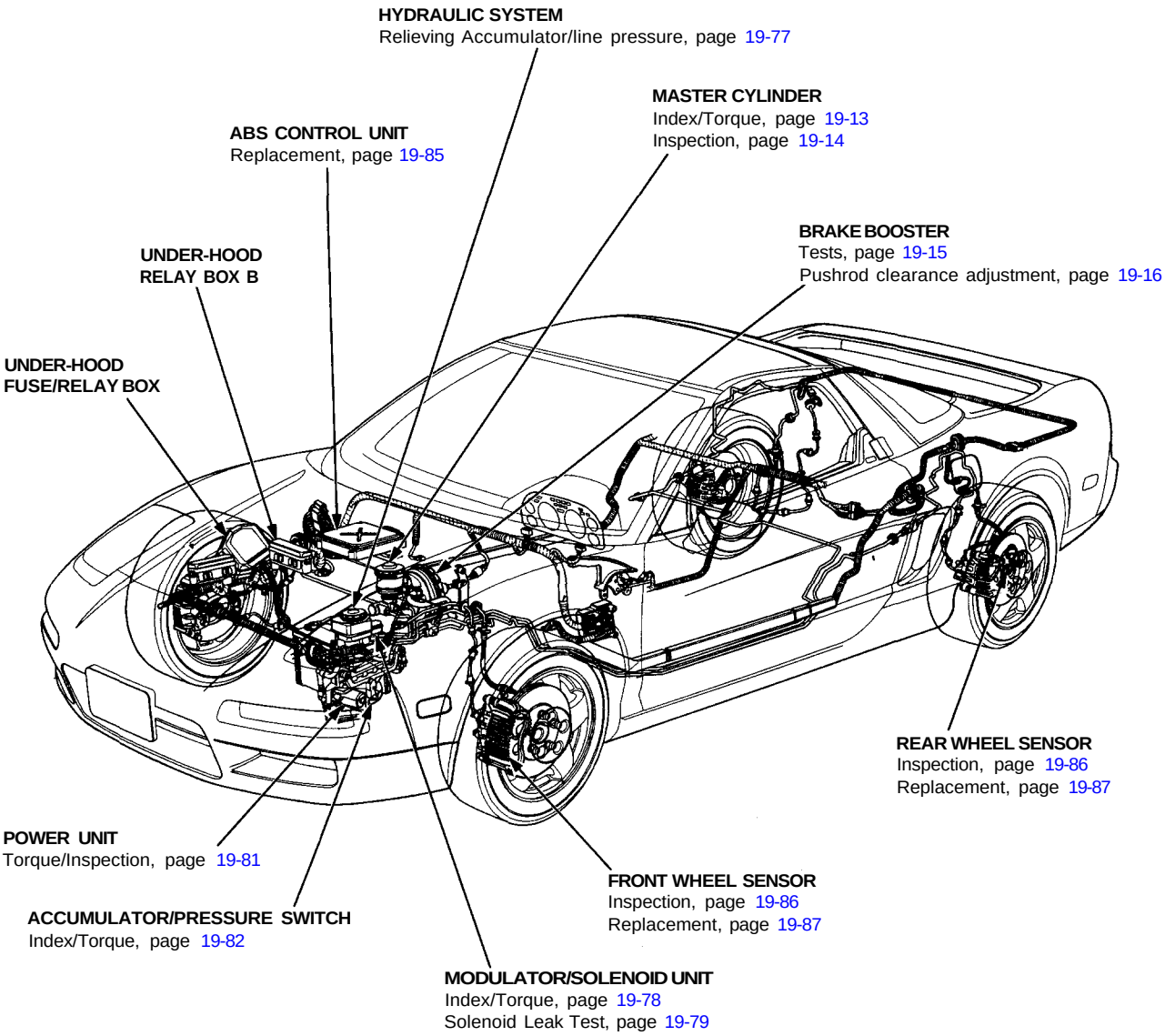

Brake System Rubber Parts and Brake Booster

Ⓐ Brake Booster

Check brake operation by applying the brakes.
If the brakes do not work properly, check the brake booster. Replace the brake booster as an assembly if it does not work properly or if there are signs of leakage.

Ⓑ Piston Cup and Pressure Cup Inspection

- Check brake operation by applying the brakes.
  Visually check for damage or signs of fluid leakage.
  Replace the master cylinder as an assembly if the pedal does not work properly or if there is damage or signs of fluid leakage.

- Check for a difference in brake pedal stroke between quick and slow brake applications. Replace the master cylinder if there is a difference in pedal stroke.

Ⓒ Brake Hoses

Visually check for damage or signs of fluid leakage.
Replace the brake hose with a new one if it is damaged or leaking.

Ⓓ Caliper Piston Seal and Piston Boots

Check brake operation by applying the brakes.
Visually check for damage or signs of fluid leakage.
If the pedal does not operate properly, the brakes drag, or there is damage or signs of fluid leakage, disassemble and inspect the brake caliper. Replace the boots and seals with new ones whenever the brake caliper is disassembled.

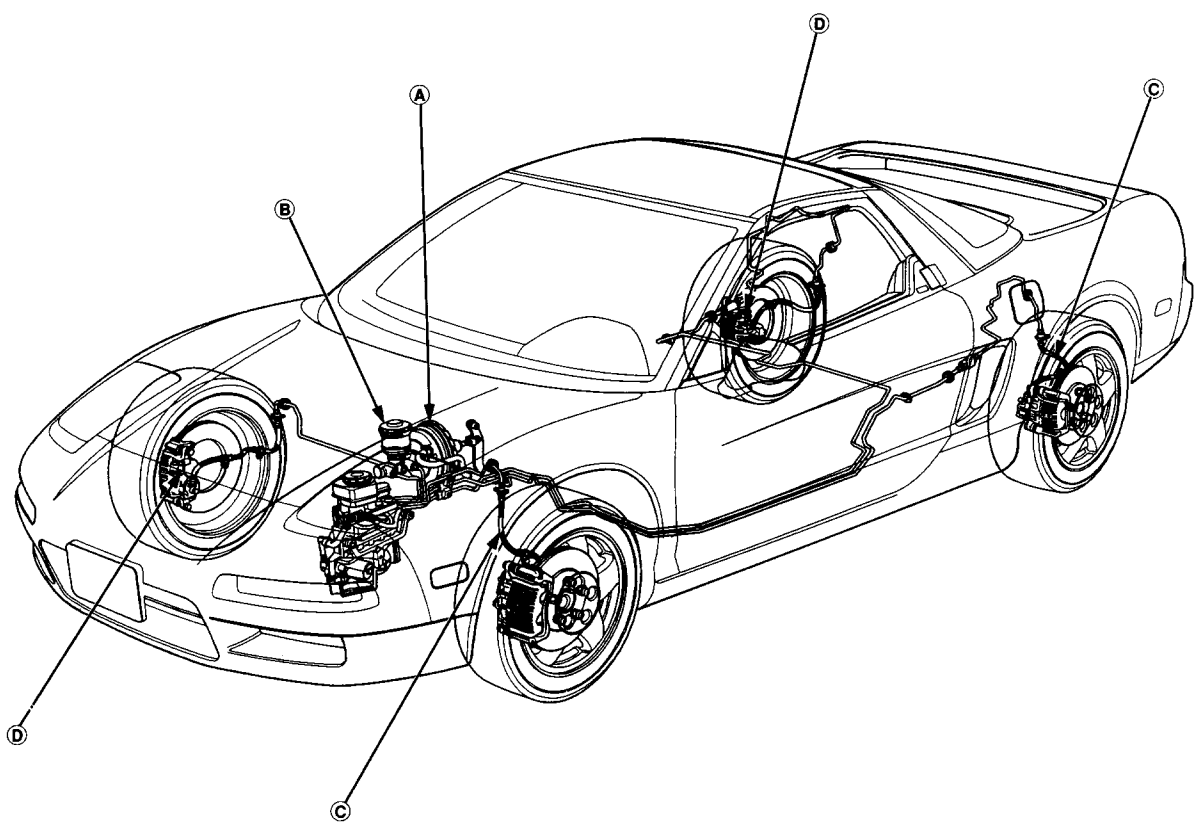

Pedal Height

Adjustment

1. Loosen the brake switch locknut, and back off the brake switch until it is no longer touching the brake pedal.

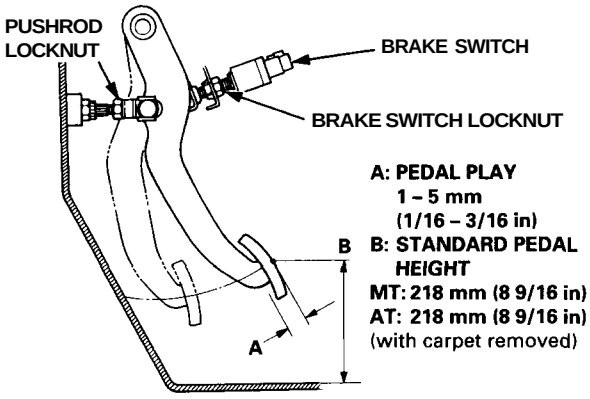

2. Loosen the pushrod locknut, and screw the pushrod in or out with pliers until the standard pedal height from the floor is 218 mm (8 9/16 in). Do not adjust the pedal height with the pushrod depressed. After adjustment, tighten the locknut firmly.

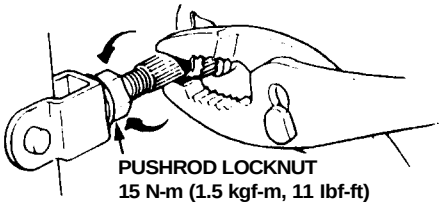

3. Screw in the brake switch until its plunger is fully depressed (threaded end touching the pad on the pedal arm). Then back off the switch 1/2 turn, and tighten the locknut firmly. Check that the brake lights go off when the pedal is released.

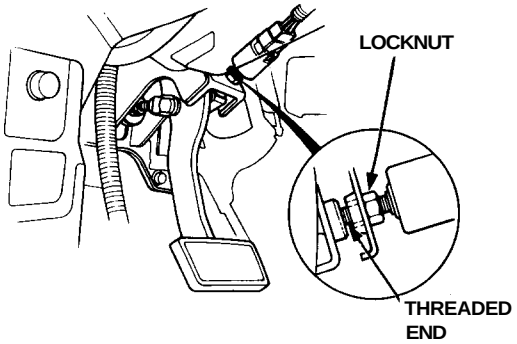

Brake Pedal Play Inspection:

Stop the engine, and inspect the play by pushing the pedal by hand. If the pedal free play is insufficient, it may result in brake drag.

Brake Pedal Play: 1 - 5 mm (1/16 - 3/16 in)

Parking Brake

Adjustment

NOTE: After rear brake caliper servicing, loosen the parking brake adjusting nut, start the engine, and depress the brake pedal several times to set the self-adjusting brakes before adjusting the parking brake.

1. Remove the console mat, the four screws and the console box.

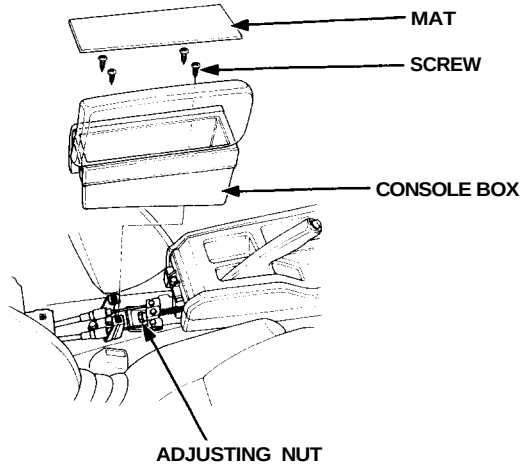

2. Block the front wheels, then raise the rear wheels off the ground.
3. Make sure the lever of the rear brake caliper contacts the brake caliper pin.
4. Pull the parking brake lever up one notch.
5. Tighten the adjusting nut until the rear brakes drag slightly when turned.
6. Release the parking lever, and check that the rear brakes do not drag when turned. Readjust if necessary.
7. With the equalizer properly adjusted, the rear brakes should be fully applied when the parking brake lever is pulled up 10 to 14 clicks.

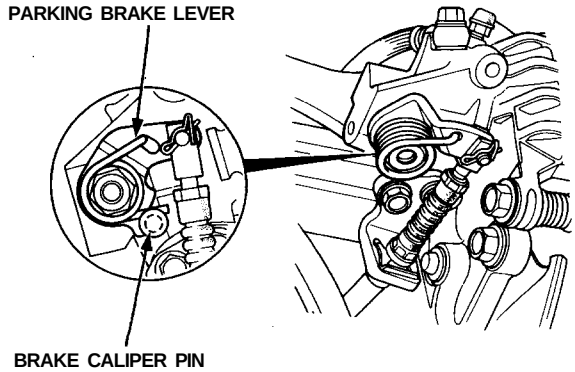

Front Brakes

Index/Inspection

⚠ WARNING

- **Never use an air hose or dry brush to clean brake assemblies.**
- **Use an OSHA-approved vacuum cleaner to avoid breathing brake dust.**
- **Contaminated brake discs or pads reduce stopping ability.**

NOTE:

- Coat piston, piston seal, and caliper bore with clean brake fluid.
- Replace all rubber parts with new ones whenever disassembled

☆: CORROSION RESISTANT BOLT

CAUTION:

- **Do not spill brake fluid on the vehicle; it may damage the paint; if brake fluid does contact the paint, wash it off immediately with water.**
- **To prevent spills, cover the hose joints with rags or shop towels.**
- **Clean all parts in brake fluid and air dry; blow out all passages with compressed air.**
- **Before reassembling, check that all parts are free of dust and other foreign particles.**
- **Replace parts with new ones whenever specified to do so.**
- **Make sure no dirt or other foreign matter is allowed to contaminate the brake fluid.**
- **Always use Genuine Honda DOT 3 Brake Fluid. Using a non-Honda brake fluid can cause corrosion and decrease the life of the system.**

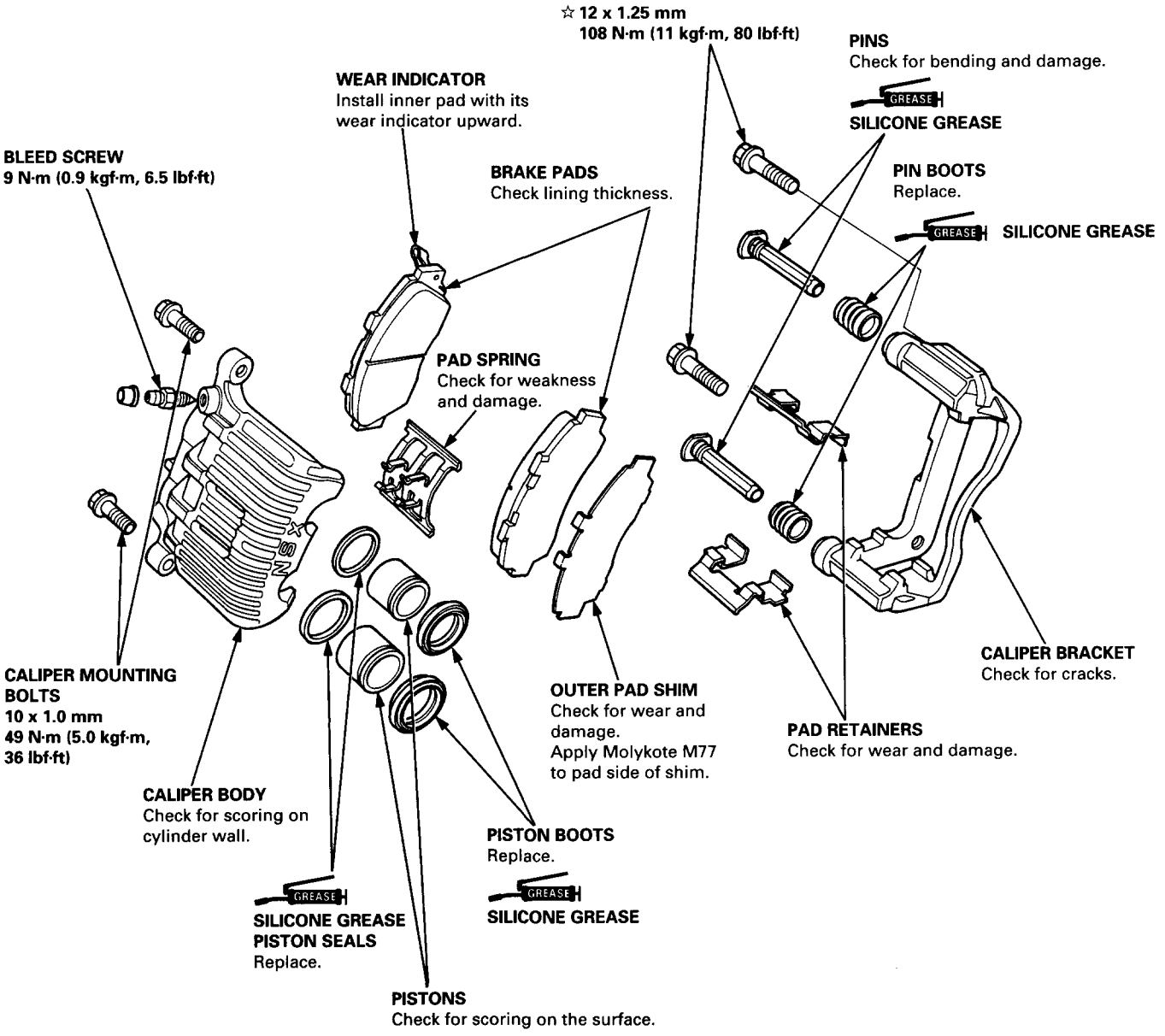

Front Brake Pads

Inspection/Replacement

⚠ WARNING

- **Never use an air hose or dry brush to clean brake assemblies.**
- **Use an OSHA-approved vacuum cleaner to avoid breathing brake dust.**

1. Loosen the front wheel nuts slightly, then raise each side of the car and support it on safety stands (see page 1-10 through 1-12). Remove the front wheels.

2. If the brake pad thickness is less than service limit at step 5, replace the front pads as a set.

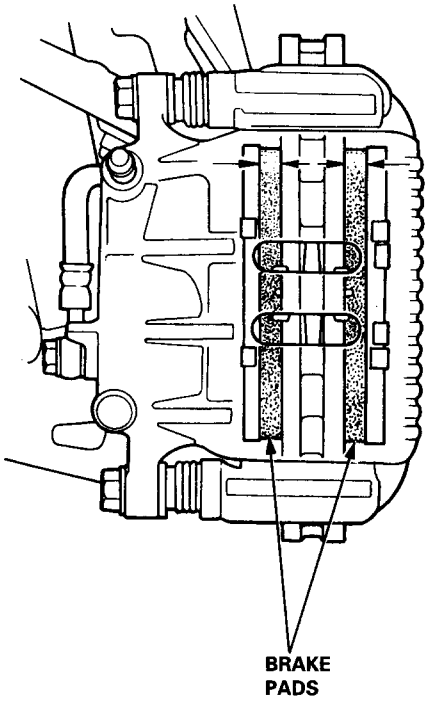

3. Remove the two brake hose mounting bolts. Remove the two caliper mounting bolts, and move the caliper out of the way. Support the caliper with a piece of wire so that it does not hang from the brake hose.

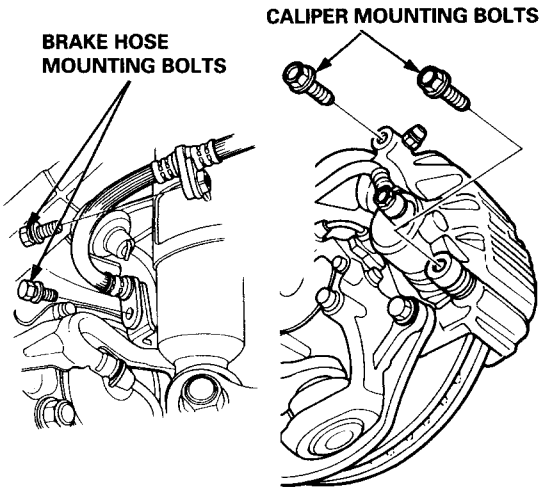

4. Remove the pad shims, pad retainers and brake pads.

5. Using vernier calipers, measure the thickness of each brake pad lining.

Brake Pad Thickness:
Standard: 11.0 mm (0.43 in) max.
Service Limit: 1.6 mm (0.06 in)

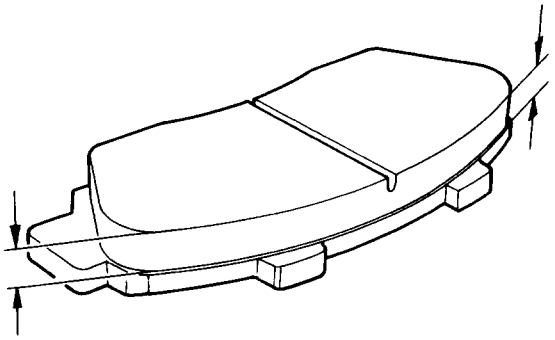

NOTE: Measurement does not include pad backing thickness.

(cont'd)

Front Brake Pads

Inspection/Replacement (cont'd)

6. Clean the caliper thoroughly; remove any rust, and check for grooves and cracks.

7. Install the pad retainers.

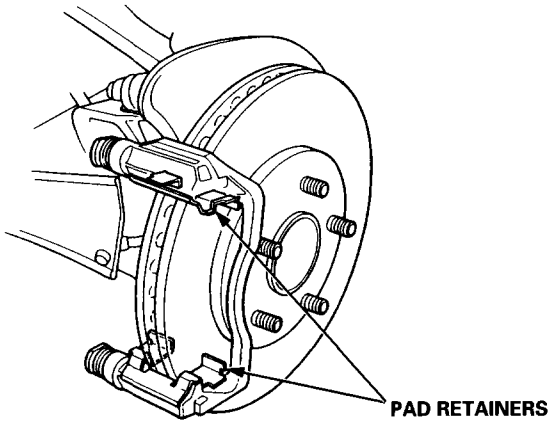

8. Apply Molykote M77 to both sides of caliper bracket and the back of the pads. Wipe excess grease off the shim.

9. Install the brake pads.

⚠ WARNING

- **When reusing the pads, always reinstall the brake pads in their original positions to prevent loss of braking efficiency.**
- **Contaminated brake discs or pads reduce stopping ability. Keep grease off the brake discs or pads.**

NOTE:

- Install the inner pad with its wear indicator facing upward.
- Apply Molykote M77 to the shims (see page 19-6). Wipe excess grease off the shims.

10. Install the brake pad shims correctly.

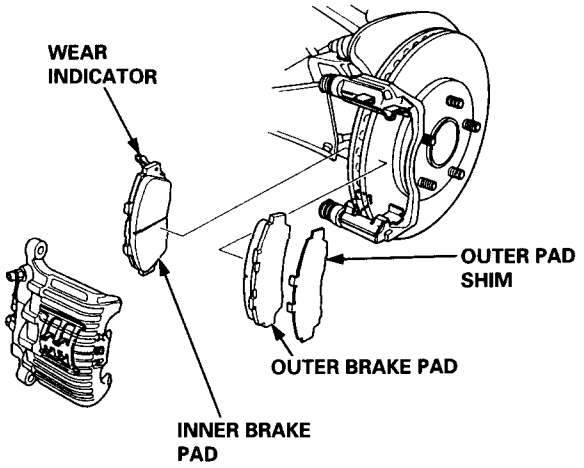

11. Push in the pistons so that the caliper will fit over the brake pads.

12. Set the caliper down into position, then install the brake hose mounting bolts and the caliper mounting bolts. Tighten the bolts to the specified torque.

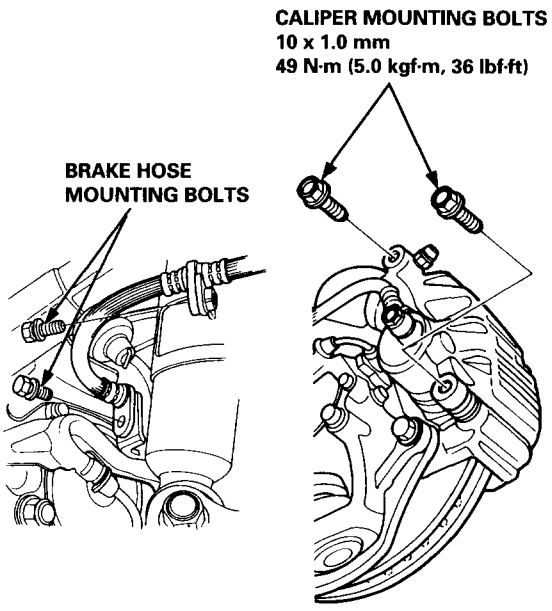

13. Depress the brake pedal several times to make sure the brakes work, then test-drive the vehicle.

NOTE: Engagement of the brake may require a greater pedal stroke immediately after the brake pads have been replaced as a set. Several applications of the brake pedal will restore the normal pedal stroke.

14. Install the front wheels and toque the wheel nuts.

NOTE: Clean the mating surface of the wheel and hub before installing the wheel.

Front Caliper

Disassembly

⚠ WARNING

- **Never use an air hose or dry brush to clean brake assemblies.**
- **Use an OSHA-approved vacuum cleaner to avoid breathing brake dust.**

CAUTION:

- **Do not spill brake fluid on the vehicle; it may damage the paint; if brake fluid does contact the paint, wash it off immediately with water.**
- **To prevent spills, cover the hose joints with rags or shop towels.**
- **Clean all parts in brake fluid and air dry; blow out all passages with compressed air.**

1. Remove the banjo bolt, and disconnect the brake hose from the caliper.

2. Remove the caliper mounting bolts, then remove the caliper.

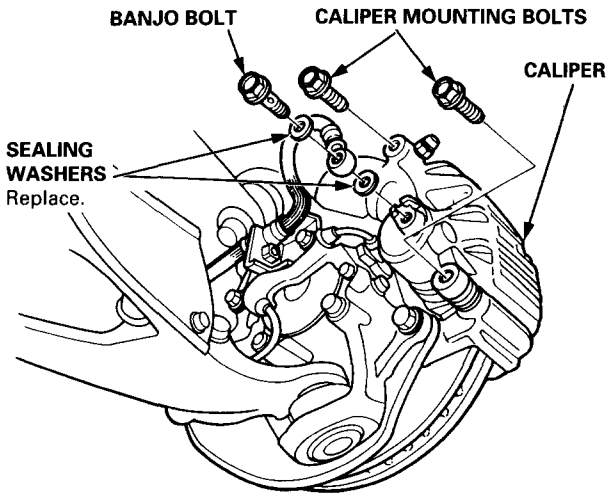

3. Remove the pad spring from the caliper body.

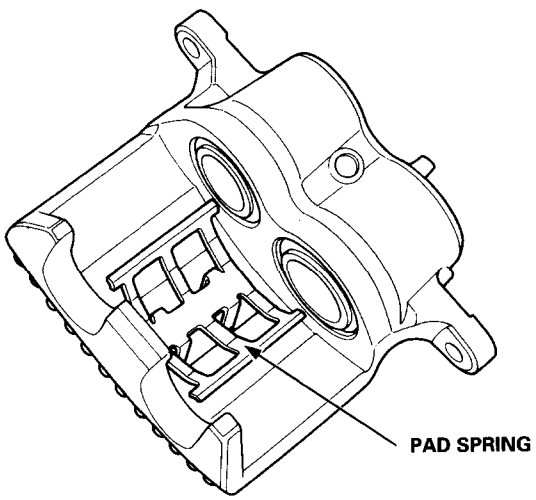

4. If necessary, apply compressed air to the caliper fluid inlet to get the pistons out. Place a shop rag or wooden block as shown to cushion the pistons when there are expelled. Use low pressure air in short spurts.

⚠ WARNING

- **Do not place your fingers in front of the piston.**
- **Do not use high air pressure; use an OSHA-approved 30 PSI nozzle.**

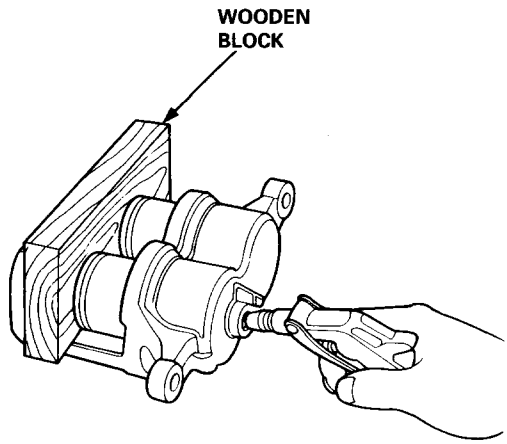

5. Remove the piston boots and piston seals.

CAUTION: Take care not to damage the cylinders.

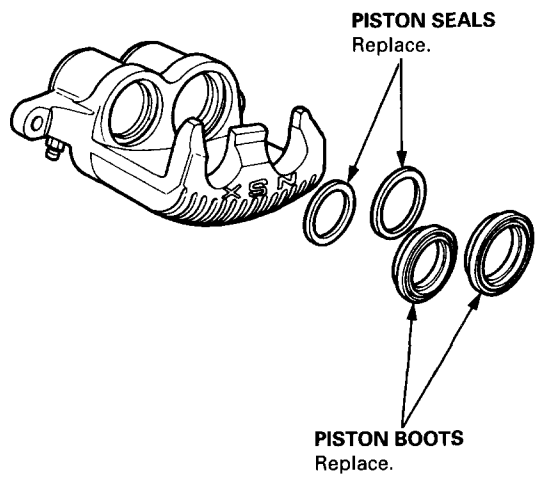

Front Caliper

Reassembly

CAUTION:
- **Before reassembling, check that all parts are free of dust and other foreign particles.**
- **Replace parts with new ones whenever specified to do so.**
- **Always use Genuine Honda DOT 3 Brake Fluid. Using a non-Honda brake fluid can cause corrosion and decrease the life of the system.**
- **Make sure no dirt or other foreign matter is allowed to contaminate the brake fluid.**
- **Do not spill brake fluid on the vehicle; it may damage the paint; if brake fluid does contact the paint, wash it off immediately with water.**

1. Clean the pistons and caliper bores with brake fluid, and inspect for wear and damage.

2. Apply silicone grease to new piston seals, then install the piston seals in the cylinder grooves.

3. Apply silicone grease to new piston boots, then install the piston boots in the cylinder grooves.

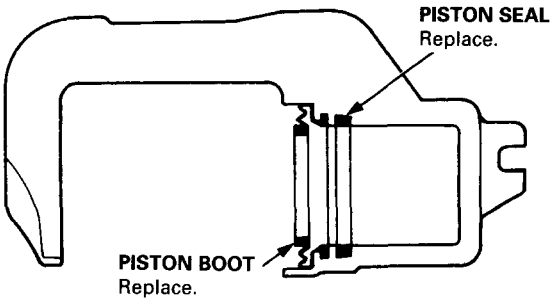

4. Lubricate the caliper cylinders and pistons with brake fluid, then install the pistons in the cylinders with the dished end facing in.

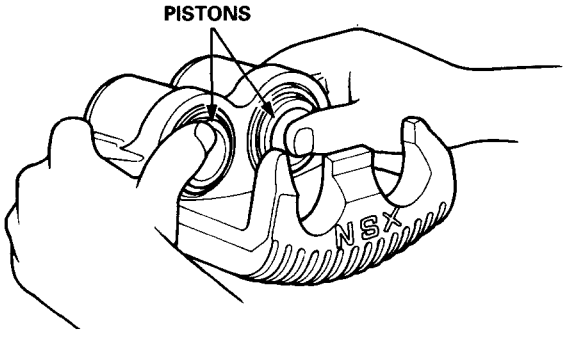

5. Reinstall the caliper in the reverse order of removal.

⚠ WARNING Always reinstall the brake pads in their original positions to prevent loss of braking efficiency.

6. Fill the brake reservoir up, and bleed the brake system (see page 19-11).

Front Brake Disc

Run-Out Inspection

1. Raise each side of the vehicle, and support it on safety stand (see page 1-10 through 1-12). Remove the front wheels.

2. Remove the brake disc pads (see page 19-7).

3. Inspect the disc surface for cracks and rust. Clean the disc thoroughly, and remove all rust.

4. Use the wheel nuts and plain washers to hold the disc securely against the hub, then mount a dial indicator as shown.

Brake Disc Runout:
Service Limit: 0.10 mm (0.004 in)

5. If the disc is beyond the service limit, refinish it.

Max. Refinishing Limit: 26.0 mm (1.02 in)

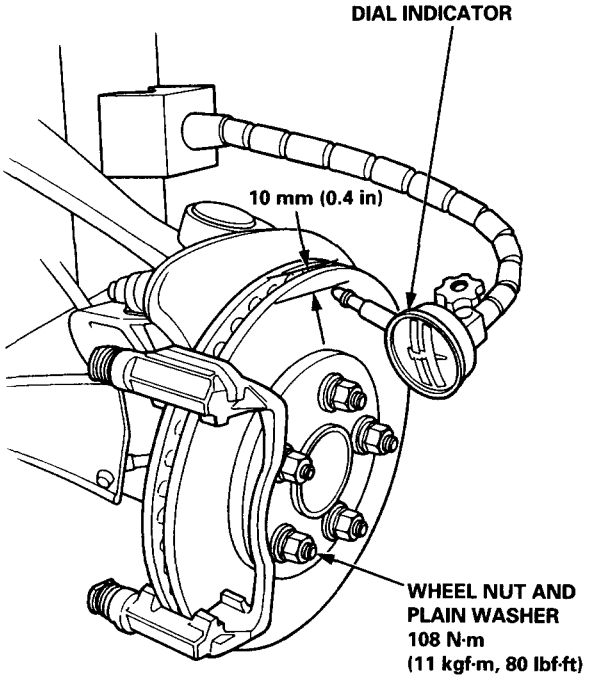

NOTE: A new disc should be refinished if its runout is greater than 0.10 mm (0.004 in).

Thickness and Parallelism Inspection

1. Raise each side of the vehicle, and support it on safety stands (see page 1-10 through 1-12). Remove the front wheels.

2. Remove the brake disc pads (see page 19-7).

3. Using a micrometer, measure disc thickness at eight points, approximately 45° apart and 10 mm (0.4 in) in from the outer edge of the disc.

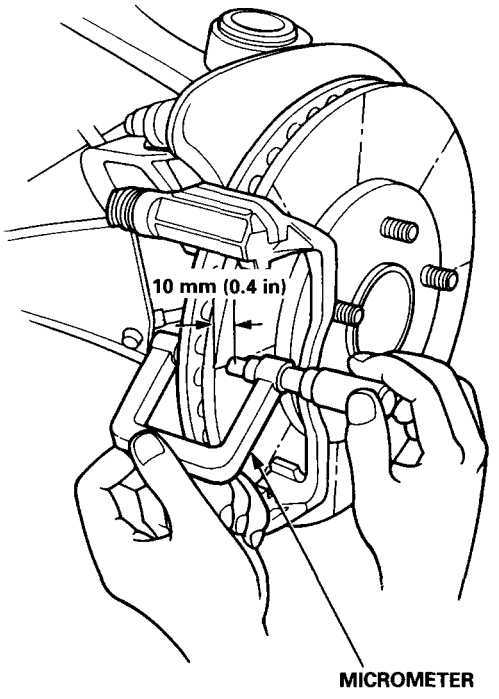

Brake disc thickness:
Standard: 28.0 mm (1.10 in) max.
Service Limit: 26.0 mm (1.02 in)

Brake Disc Parallelism:
The difference between any thickness measurements should not be more than 0.015 mm (0.0006 in).

4. If the disc is beyond the limits for parallelism, refinish it.

Max. Refinishing Limit: 26.0 mm (1.02 in)

Bleeding

CAUTION:

- **Always use Genuine Honda DOT 3 Brake Fluid. Using a non-Honda brake fluid can cause corrosion and decrease the life of the system.**
- **Make sure no dirt or other foreign matter is allowed to contaminate the brake fluid.**
- **Do not spill brake fluid on the vehicle, it may damage the paint; if brake fluid does contact the paint, wash it off immediately with water.**

NOTE: The reservoir on the master cylinder must be full at the start of bleeding procedure, and checked after bleeding each brake caliper. Add fluid as required. Always use Genuine Honda DOT 3 Brake Fluid. Using a non-Honda brake fluid can cause corrosion and decrease the life of the system.

BLEEDING SEQUENCE:

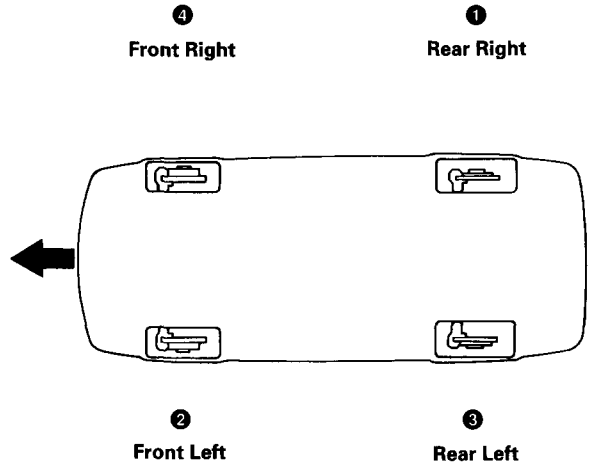

1. Have someone slowly pump the brake pedal several times, then apply steady pressure.
2. Loosen the brake bleed screw to allow air to escape from the system. Then tighten the bleed screw securely.
3. Repeat the procedure for each wheel in the sequence shown above, until air bubbles no longer appear in the fluid.

(cont'd)

Bleeding

(cont'd)

FRONT:

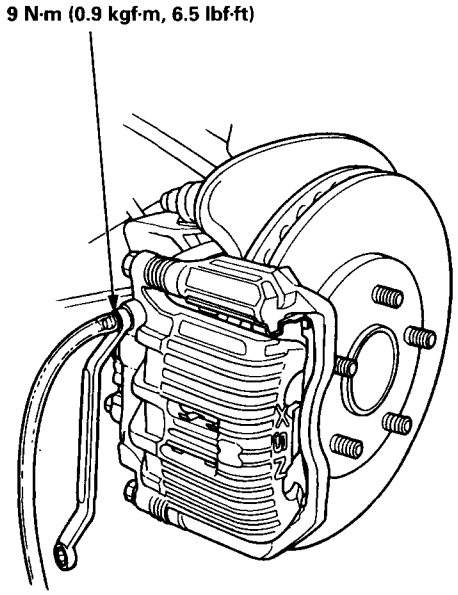

REAR:

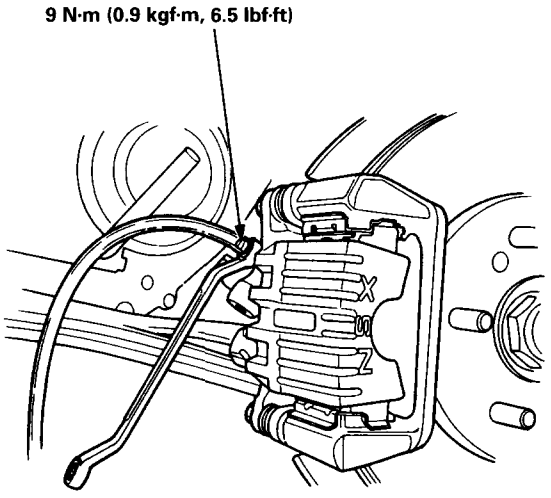

Master Cylinder and Brake Booster

Index/Torque

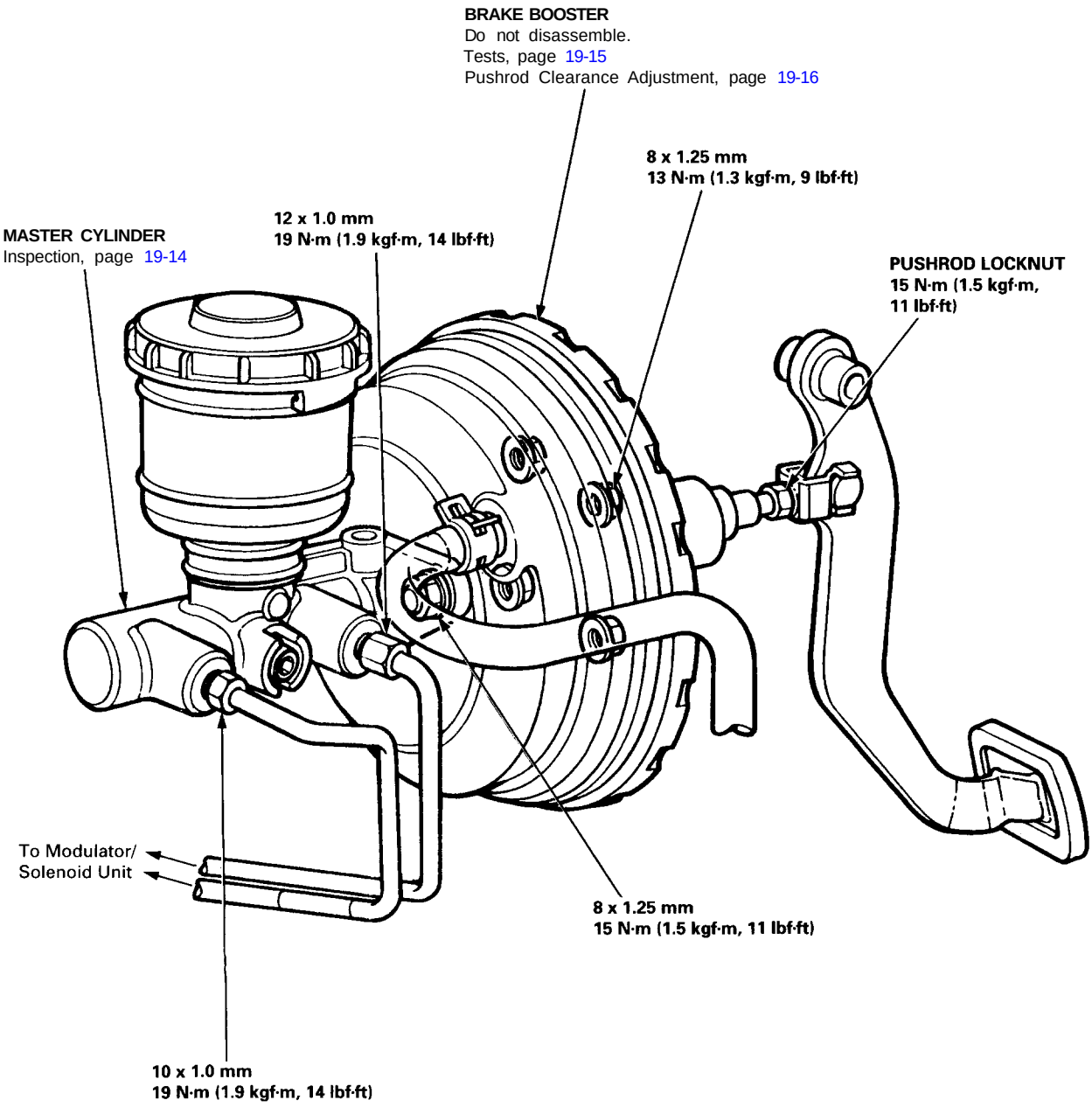

Master Cylinder

Inspection

CAUTION:

- **Be careful not to bend or damage the brake lines when removing the master cylinder.**
- **Do not spill brake fluid on the vehicle; it may damage the paint; if brake fluid does contact the paint, wash it off immediately with water.**
- **To prevent spills, cover the hose joints with rags or shop towels.**
- **Before reassembling, check that all parts are free of dust and other foreign particles.**
- **Do not try to disassemble the master cylinder assembly. Replace the master cylinder assembly with a new part if necessary.**
- **Make sure no dirt or other foreign matter is allowed to contaminate the brake fluid.**
- **Always use Genuine Honda DOT 3 Brake Fluid. Using a non-Honda brake fluid can cause corrosion and decrease the life of the system.**
- **When connecting the brake lines, make sure that there is no interference between the brake lines and other parts.**

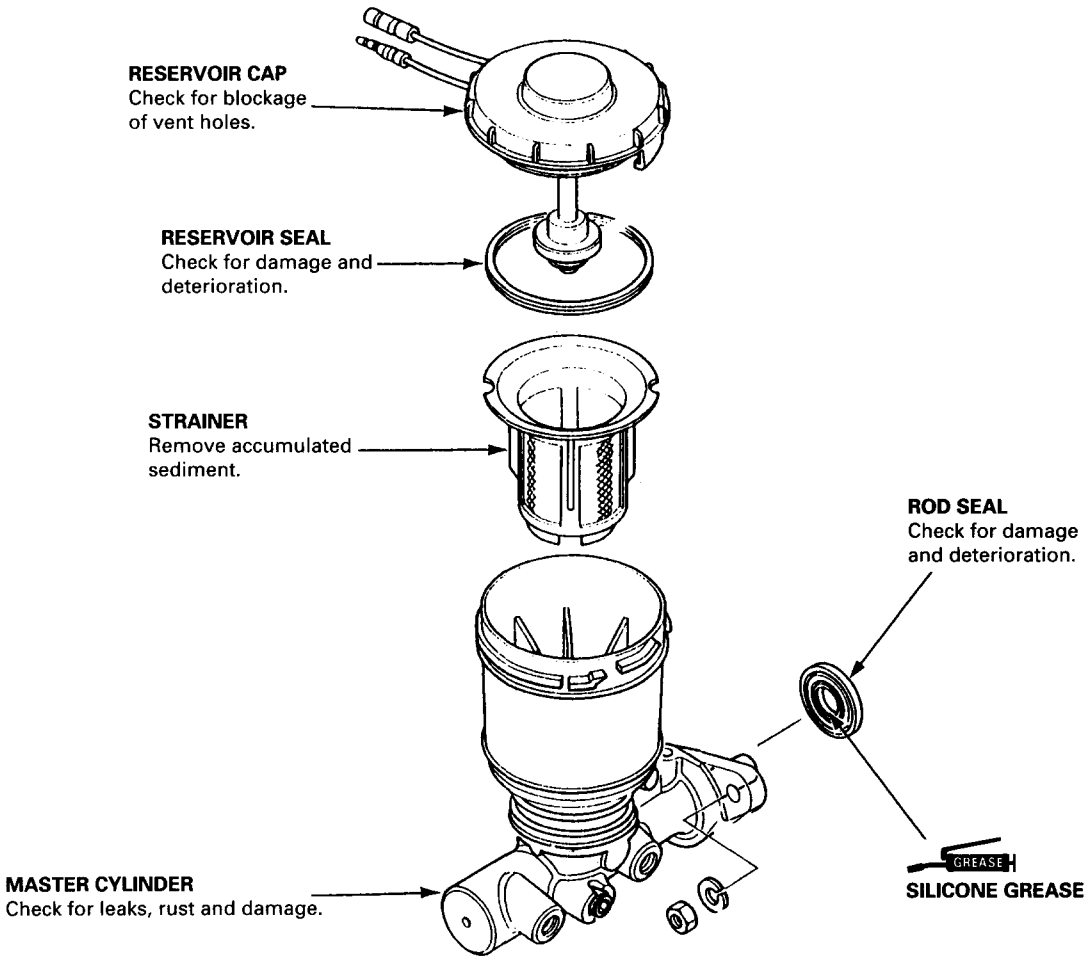

Brake Booster

Tests

Functional Test

1. With the engine stopped, depress the brake pedal several times to deplete the vacuum reservoir, then depress the pedal hard and hold it for 15 seconds. If the pedal sinks, either the master cylinder is bypassing internally, or the brake system (master cylinder, lines, modulator, proportioning valve, or calipers) is leaking.

2. Start the engine with the pedal depressed. If the pedal sinks slightly, the vacuum booster is operating normally, if the pedal height does not vary, the booster or check valve is faulty.

3. With the engine running, depress the brake pedal lightly. Apply just enough pressure to hold back automatic transmission creep. If the brake pedal sinks more than 10 mm (3/8 in.) in three minutes, the master cylinder is faulty. A slight change in pedal height when the A/C compressor cycles on and off if normal. (The A/C compressor load changes the vacuum available to the booster.)

Leak Test

1. Depress the brake pedal with the engine running, then stop the engine. If the pedal height does not vary while depressed for 30 seconds, the vacuum booster is OK. If the pedal rises, the booster is faulty.

2. With the engine stopped, depress the brake pedal several times using normal pressure. When the pedal is first depressed, it should be low. On consecutive applications, the pedal height should gradually rise. If the pedal position does not vary, check the booster check valve.

Booster Check Valve Test

1. Disconnect the brake booster vacuum hose at the booster or at the booster side of the valve.

2. Start the engine and let it idle. There should be vacuum. If no vacuum is available, the check valve is not working properly. Replace the check valve and retest.

Brake Booster

Pushrod Clearance Adjustment

NOTE: Master cylinder pushrod-to-piston clearance must be checked and adjustments made, if necessary, before installing master cylinder.

1. Set the special tool on the master cylinder body; push in the center shaft until the top of it contacts with the end of the secondary piston by turning the adjusting nut.

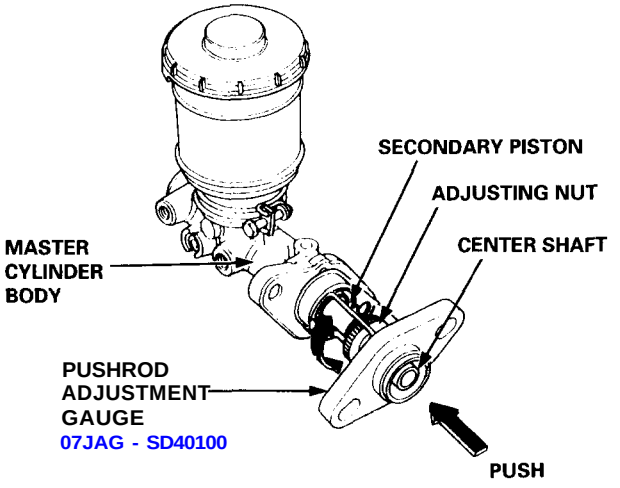

2. Without disturbing the center shaft's position, install the special tool upside down on the brake booster.

3. Install the master cylinder nuts and tighten to the specified torque.

4. Connect the brake booster in-line with a vacuum gauge 0 - 101 kPa (0 - 760 mm Hg, 30 in.Hg) to the booster's engine vacuum supply, and maintain a engine speed that will deliver 66 kPa (500 mm Hg, 20 in.Hg) vacuum.

5. With a feeler gauge, measure the clearance between the gauge body and the adjusting nut as shown.

Clearance: 0 - 0.4 mm (0 - 0.02 in)

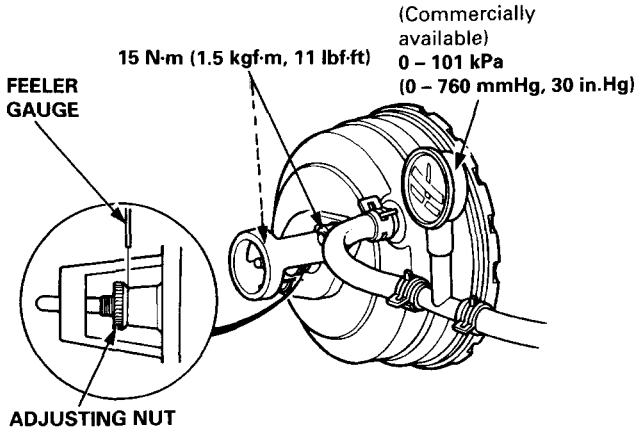

NOTE: If the clearance between the gauge body and adjusting nut is 0.4 mm (0.02 in), the pushrod-to-piston clearance is 0 mm. However, if the clearance between the gauge body and adjusting nut is 0 mm, the pushrod-to-piston clearance is 0.4 mm (0.02 in) or more. Therefore, it must be adjusted and rechecked.

6. If clearance is incorrect, loosen the star locknut and turn the adjuster in or out to adjust.

NOTE:
- Adjust the clearance while the specified vacuum is applied to the brake booster.
- Hold the clevis while adjusting.

7. Tighten the star locknut securely.

8. Remove the special tool, and install a new master cylinder rod seal in the brake booster.

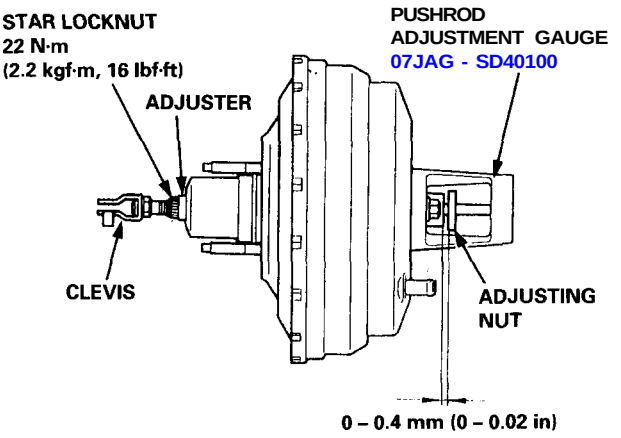

9. Adjust the pushrod length as shown if the booster is removed.

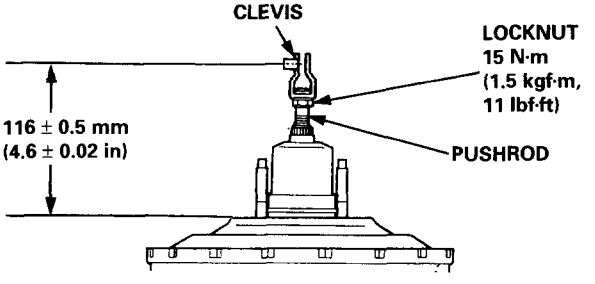

10. Install the master cylinder (see page 19-13).

11. After installation, perform the following inspections and adjust if necessary.
- Brake pedal height (see page 19-5).
- Brake pedal free play (see page 19-5).

Rear Brakes

Torque/Inspection

⚠ WARNING

- **Never use an air hose or dry brush to clean brake assemblies.**
- **Use an OSHA-approved vacuum cleaner to avoid breathing brake dust.**
- **Contaminated brake discs or pads reduce stopping ability.**

GREASE: BRAKE CYLINDER GREASE (P/N 08733 – B020E) OR EQUIVALENT RUBBER GREASE

GREASE: SILICONE GREASE

☆: **CORROSION RESISTANT BOLT**

CAUTION:

- **Do not spill brake fluid on the vehicle; it may damage the paint; if brake fluid does contact the paint, wash it off immediately with water.**
- **To prevent spills, cover the hose joints with rags or shop towels.**
- **Clean all parts in brake fluid and air dry; blow out all passages with compressed air.**
- **Before reassembling, check that all parts are free of dust and other foreign particles.**
- **Replace parts with new ones whenever specified to do so.**
- **Make sure no dirt or other foreign matter is allowed to contaminate the brake fluid.**
- **Always use Genuine Honda DOT 3 Brake Fluid. Using a non-Honda brake fluid can cause corrosion and decrease the life of the system.**

NOTE:

- Coat piston, piston seal, and caliper bore with clean brake fluid.
- Replace all rubber parts with new ones whenever disassembled.

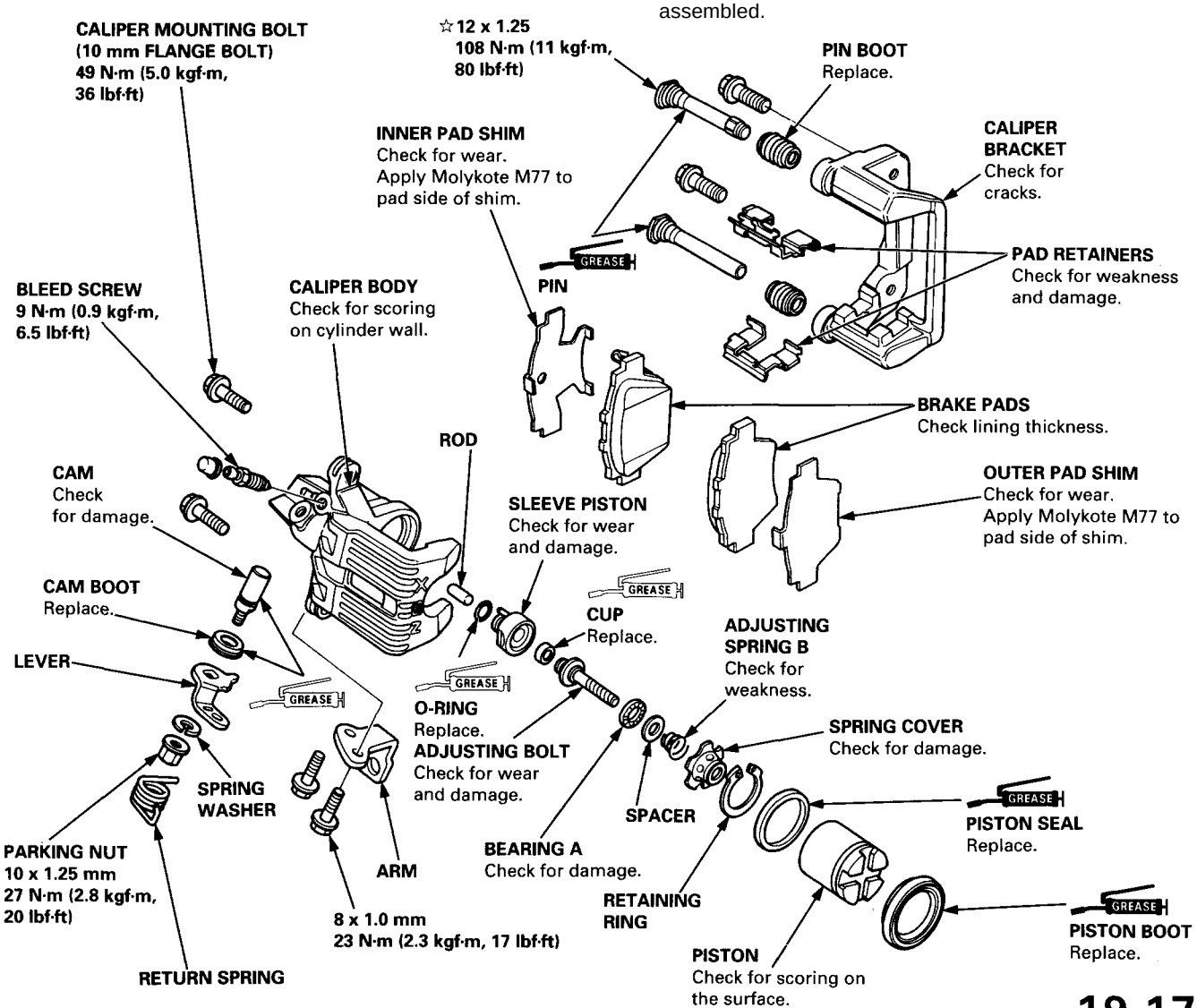

Rear Brake Pads

Inspection/Replacement

⚠ WARNING

- **Never use an air hose or dry brush to clean brake assemblies.**
- **Use an OSHA-approved vacuum cleaner to avoid breathing brake dust.**

1. Loosen the rear wheel nuts slightly, then raise each side of the vehicle and support it on safety stands (see page 1-10 through 1-12).
   Remove the rear wheels.

2. Remove the caliper shield.

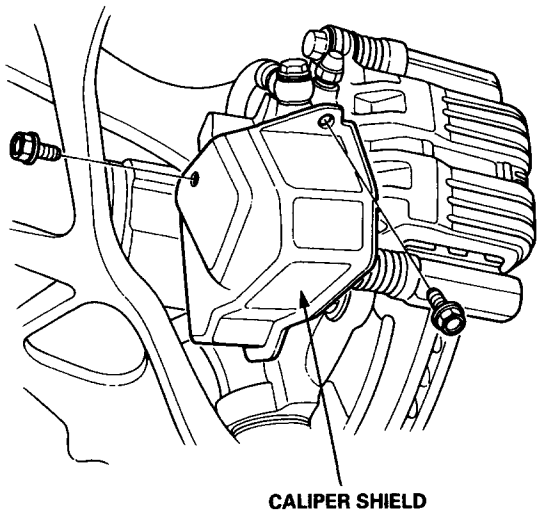

3. Remove the lock pin and clevis pin. Remove the cable clip, and disconnect the cable from the arm.

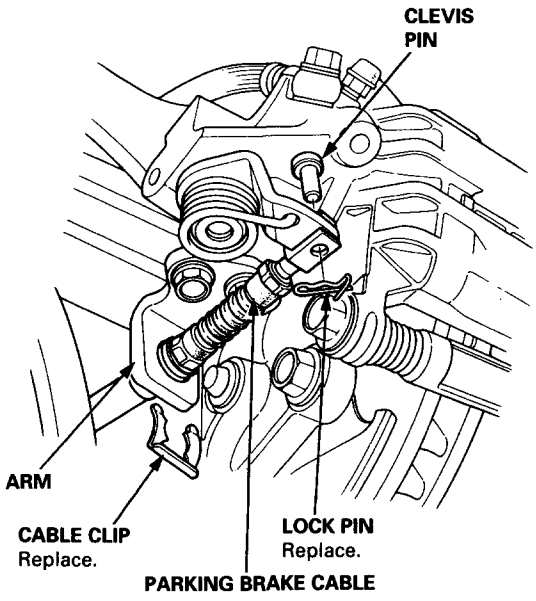

4. Remove the two brake hose mounting bolts. Remove the two caliper mounting bolts, and the caliper from the bracket.

CAUTION:

- **Thoroughly clean the outside of the caliper to prevent dust and dirt from entering inside.**
- **Support the caliper with a piece of wire so that it does not hang from the brake hose.**

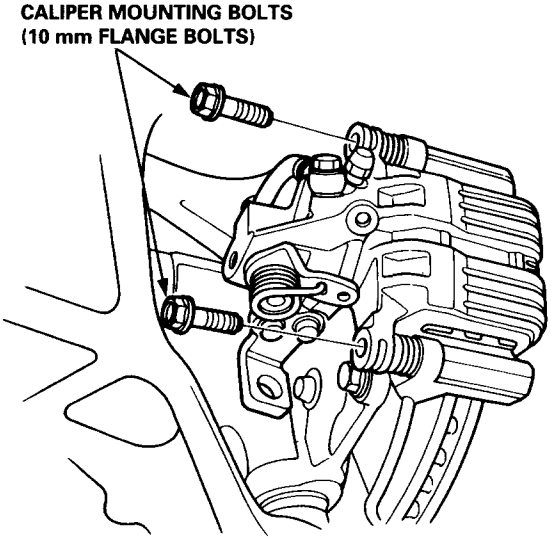

If lining thickness is less than service limit at step 6, replace the brake pads as a set.

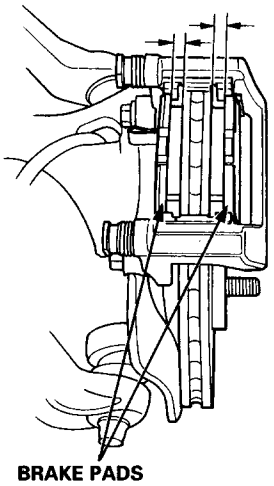

5. Remove the pad shims, pads and pad retainers.

6. Using vernier calipers, measure the thickness of each brake pad lining.

Brake Pad Thickness:
Standard: 9.5 mm (0.37 in) max.
Service Limit: 1.6 mm (0.06 in)

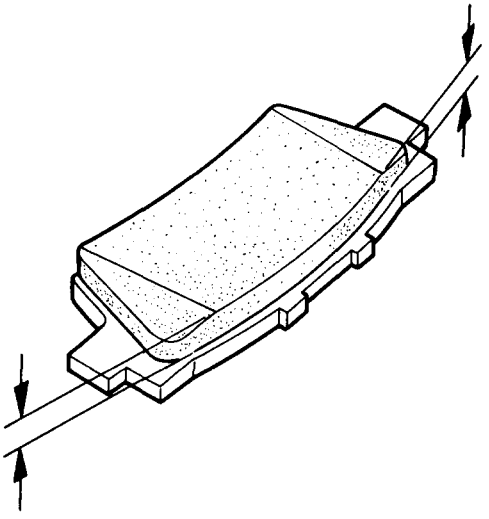

NOTE: Measurement does not include pad backing thickness.

7. Clean the caliper thoroughly; remove any rust, and check for grooves and cracks.

8. Make sure that the pad retainers are installed in the correct positions.

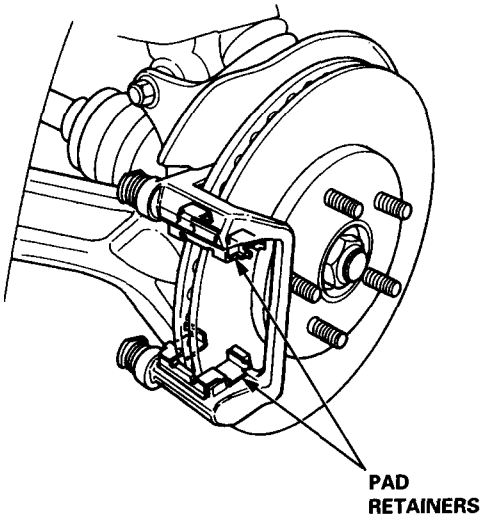

9. Install the new brake pads and pad shims on caliper bracket.

⚠ WARNING

- **When reusing the pads, always reinstall the brake pads in their original positions to prevent loss of braking efficiency.**
- **Contaminated brake discs or pads reduce stopping ability. Keep grease off the discs and pads.**

NOTE:
- Apply Molykote M77 to the shims (see page 19-17). Wipe excess grease off the shims.
- Install the inner pad with its wear indicator facing upward.
- Make sure that the pad spring is installed onto the caliper body.

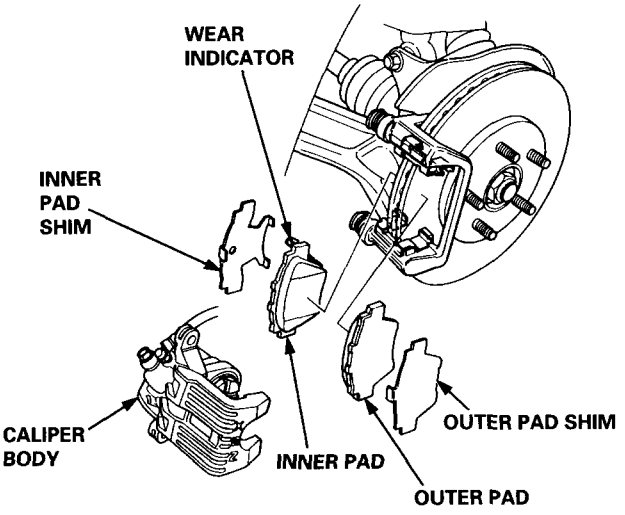

10. Rotate the piston clockwise into place in the cylinder, then align the cutout in the piston with the tab on the inner pad by turning back the piston back.

CAUTION: Lubricate the boot with silicone grease to avoid twisting the piston boot. If the piston boot is twisted, back it out so it sits properly.

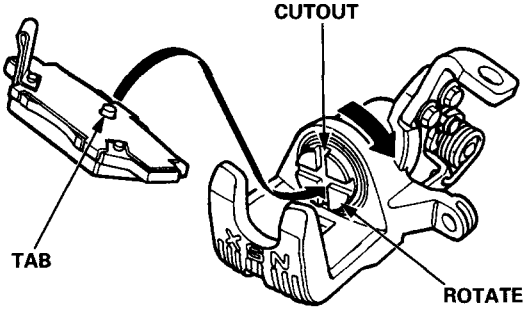

(cont'd)

Rear Brake Pads

Inspection/Replacement (cont'd)

11. Install and tighten the two caliper mounting bolts.

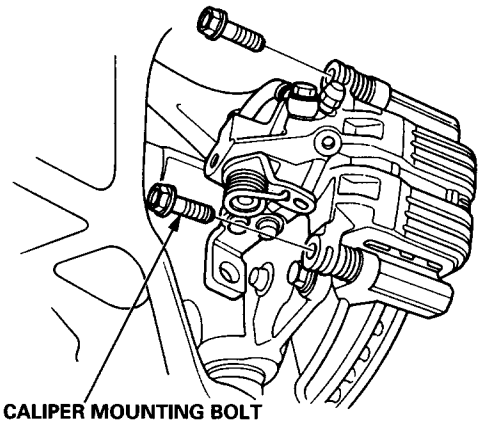

12. Insert the cable through the arm, and connect the cable to the lever with the clevis pin and new lock pin. Install the new cable clip securely.

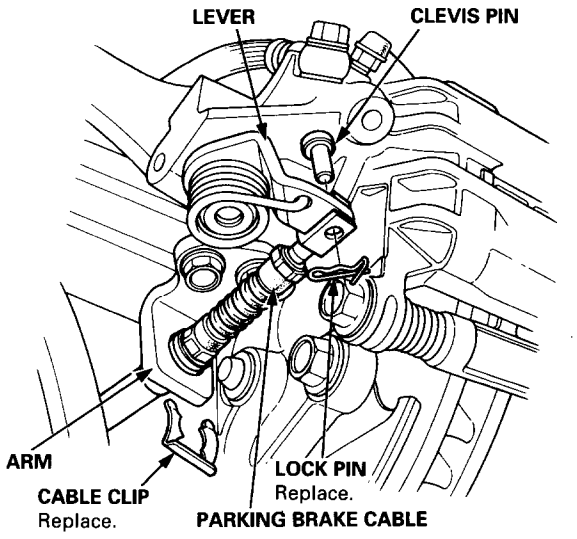

13. Install the caliper shield.

14. Depress the brake pedal several times to make sure the brakes work, then test-drive the vehicle.

NOTE: Engagement of the brake may require a greater pedal stroke immediately after the brake pads have been replaced as a set. Several applications of the brake pedal will restore the normal pedal stroke.

15. Install the rear wheels and torque the wheel nuts.

NOTE: Clean the mating surfaces of the wheel and hub before installing the wheel.

Rear Brake Disc

Run-Out Inspection

1. Raise each side of the vehicle, and support it on safety stands (see page 1-10 through 1-12). Remove the rear wheels.

2. Remove the brake pads (see page 19-18).

3. Inspect the disc surface for grooves, cracks, and rust. Clean the disc thoroughly and remove all rust.

4. Use the wheel nuts and plain washers to hold the disc securely against the hub, then mount a dial indicator as shown.

   Brake Disc Runout:
   Service Limit: 0.10 mm (0.004 in)

5. If the disc is beyond the service limit, refinish the rotor.

   Max. Refinishing Limit: 21.0 mm (0.83 in)

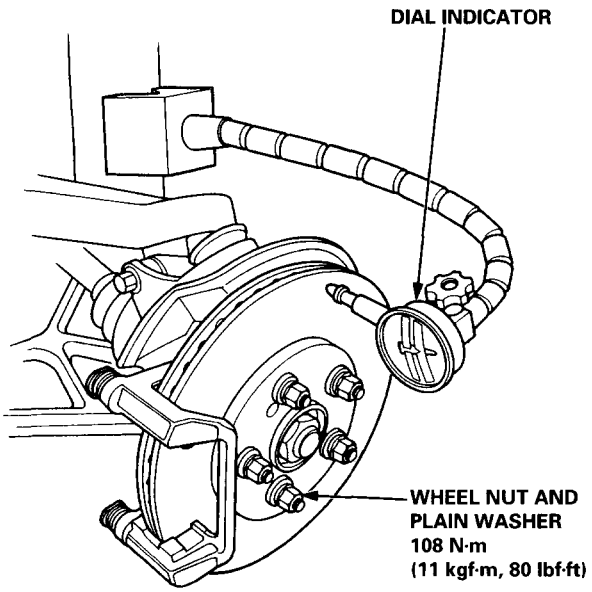

NOTE: A new disc should be refinished if its runout is greater than 0.1 mm (0.004 in).

Thickness and Parallelism Inspection

1. Raise both sides of the vehicle, and support it on safety stands (see page 1-10 through 1-12). Remove the rear wheels.

2. Move the caliper and pads out of the way as described on the preceding page.

3. Using a micrometer, measure disc thickness at eight points, approximately 45° apart and 10 mm (0.4 in) in from the outer edge of the disc.

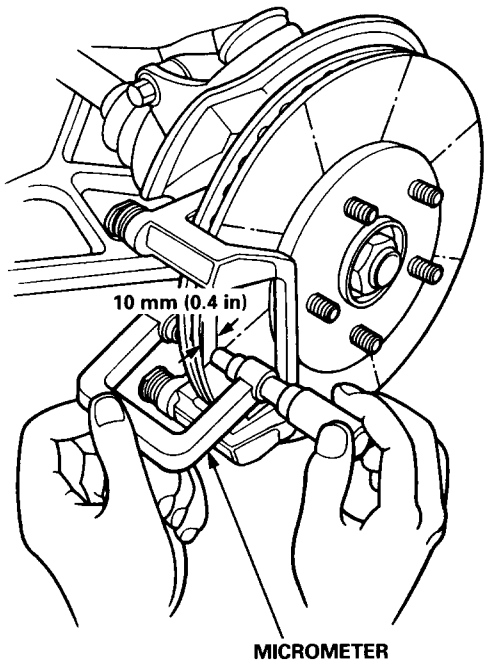

Brake Disc Thickness:
Standard: 23.0 mm (0.91 in) max.
Service Limit: 21.0 mm (0.83 in)

Brake Disc Parallelism:
The difference between any thickness measurements should not be more than 0.015 mm (0.0006 in).

4. If the brake disc is beyond the limits parallelism, refinish the disc.

Max. Refinishing Limit: 19.0 mm (0.75 in)

Rear Caliper

Disassembly

⚠ WARNING

- **Never use an air hose or dry brush to clean brake assemblies.**
- **Use an OSHA-approved vacuum cleaner to avoid breathing brake dust.**

CAUTION:

- **Do not spill brake fluid on the vehicle; it may damage the paint; if brake fluid does contact the paint, wash it off immediately with water.**
- **To prevent spills, cover the hose joints with rags or shop towels.**
- **Clean all parts in brake fluid and air dry; blow out all passages with compressed air.**

1. Remove the caliper shield (see page 19-18).
2. Disconnect the parking cable (see page 19-18).
3. Remove the banjo bolt and two sealing washers.
4. Remove the two caliper mounting bolts and caliper body from the bracket.

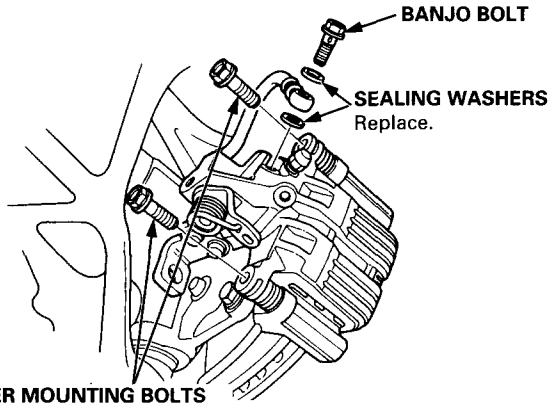

5. Remove the pad spring from the caliper.
6. Remove the piston and piston boot while rotating the piston with a commercially-available locknut wrench.

   CAUTION: Avoid damaging the piston and piston boot.

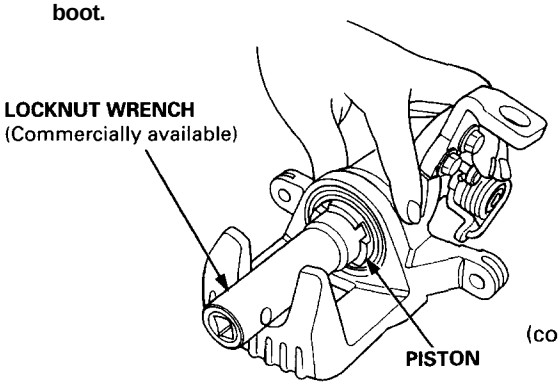

(cont'd)

Disassembly (cont'd)

7. Remove the circlip, washer, adjusting spring A, and the adjusting nut from the piston.

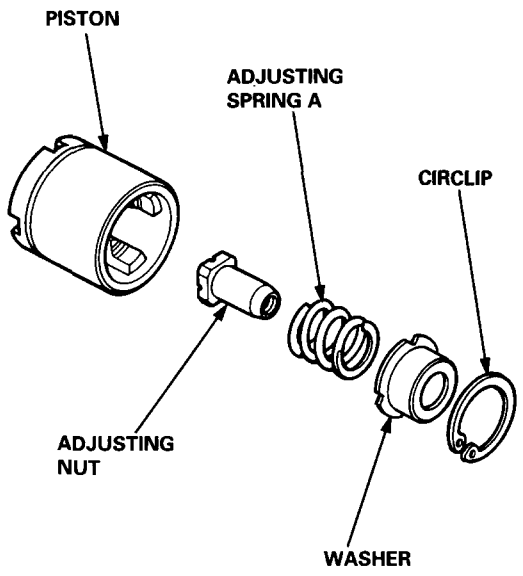

8. Remove the piston seal.

CAUTION: Take care not to damage the cylinder bore.

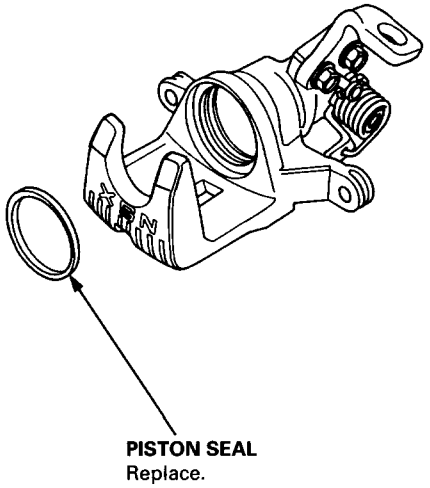

9. Adjust the special tool as shown.

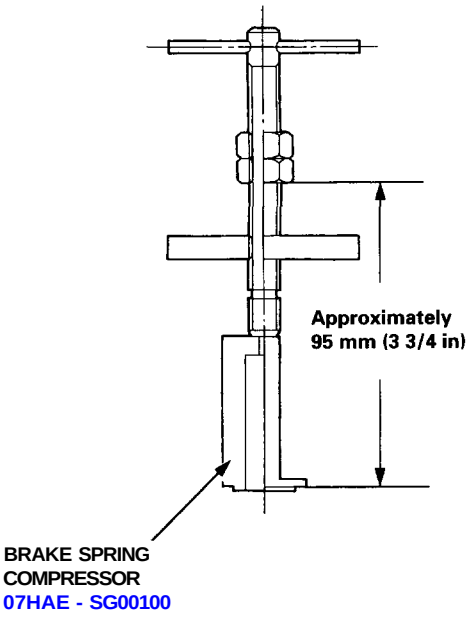

10. Install the special tool between the caliper body and spring guide as shown.

11. Compress the adjusting spring B by turning the shaft of the special tool, then remove the circlip with snap ring pliers.

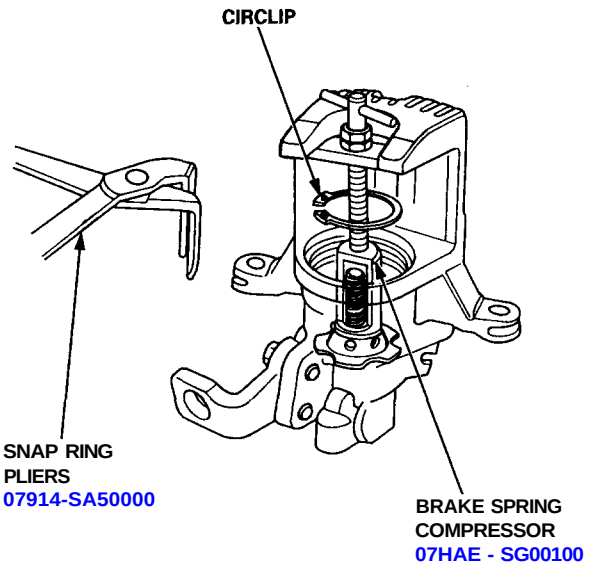

12. Remove the adjusting bolt.

13. Remove the spring cover, adjusting spring B, spacer, bearing A and cup from the adjusting bolt.

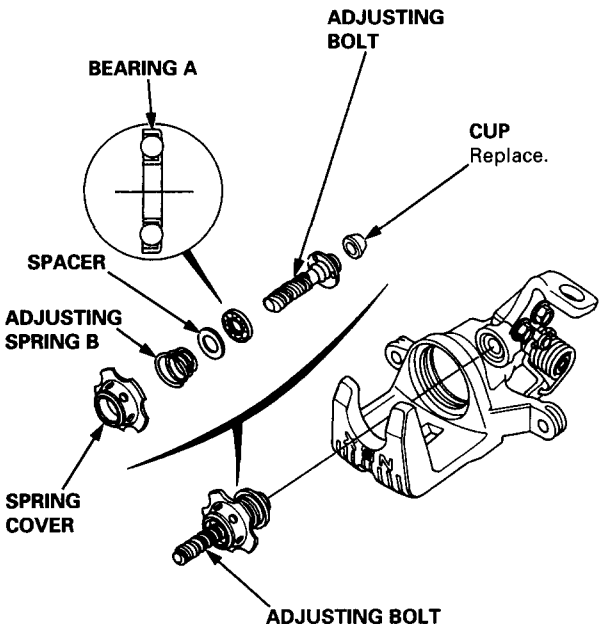

14. Remove the sleeve piston, and remove the pin from the cam.

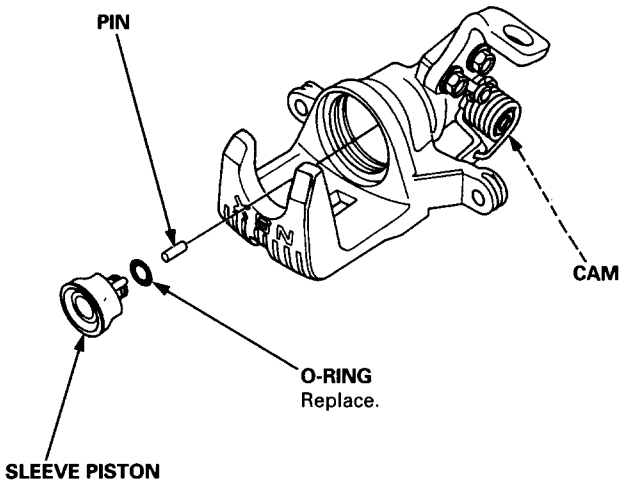

15. Remove the return spring.

16. Remove the parking lever and cam as an assembly from the caliper body.

CAUTION: Do not loosen the parking nut with the cam installed in the caliper body. If the lever and shaft must be separated, hold the lever in a vise and loosen the parking nut.

17. Remove the cam boot.

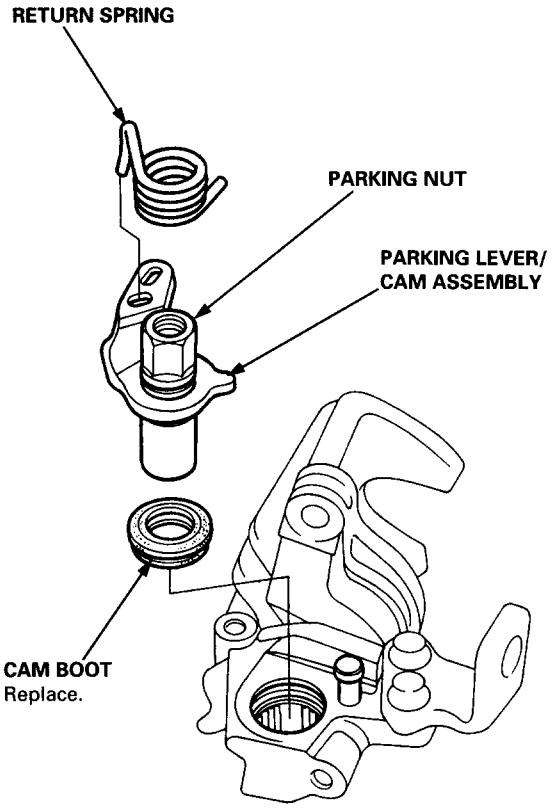

Rear Caliper

Reassembly

CAUTION:
- **Make sure all parts are clean before reassembly.**
- **Use only new replacement parts.**
- **Always use Genuine Honda DOT 3 Brake Fluid. Using a non-Honda brake fluid can cause corrosion and decrease the life of the system.**
- **Do not allow dirt or other foreign matter to contaminate the brake fluid.**
- **Avoid spilling brake fluid on painted, plastic or rubber surfaces as it can damage the finish. Wash spilled brake fluid off immediately with clean water.**

1. Pack all cavities of the needle bearing with a commercially-available assembly lube.

2. Coat the new cam boot with a commercially-available assembly lube and install in the caliper.

3. Apply commercially-available assembly lube to the pin contacting area of the cam, and install the cam and lever assembly into the caliper body.

4. Install the return spring.

   CAUTION:
   - **When the cam and lever were separated, be sure to assemble them before installing the cam in the caliper body. Install the lever and spring washer, apply locking agent to the threads, and tighten the parking nut while holding the lever with a vise.**
   - **Avoid damaging the cam boot since it must be installed before the cam.**
   - **When installing the cam, do not allow the cam boot lips to turn outside in.**

GREASE : **Commercially-available assembly lube**

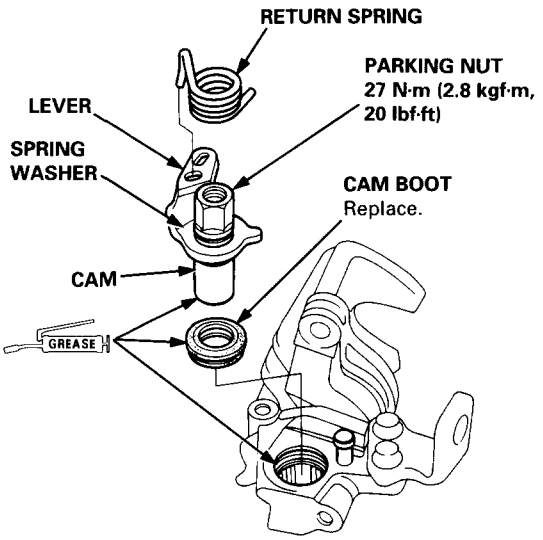

5. Install the pin in the cam.

6. Install a new O-ring on the sleeve piston.

7. Install the sleeve piston so the hole in the bottom of the piston is aligned with the pin in the cam, and the two pins on the piston are aligned with the holes in the caliper.

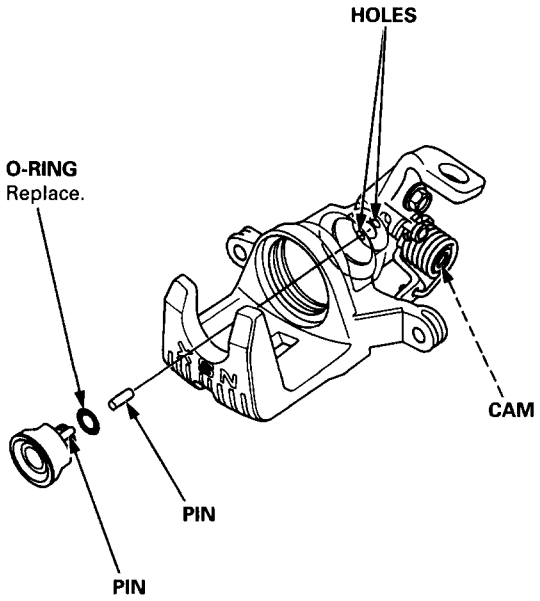

8. Install a new cup with its groove facing the bearing A side on the adjusting bolt.

9. Fit the bearing A, spacer, adjusting spring B and spring cover on the adjusting bolt, and install in the caliper cylinder.

   NOTE: Install the bearing A with its open end facing the spacer.

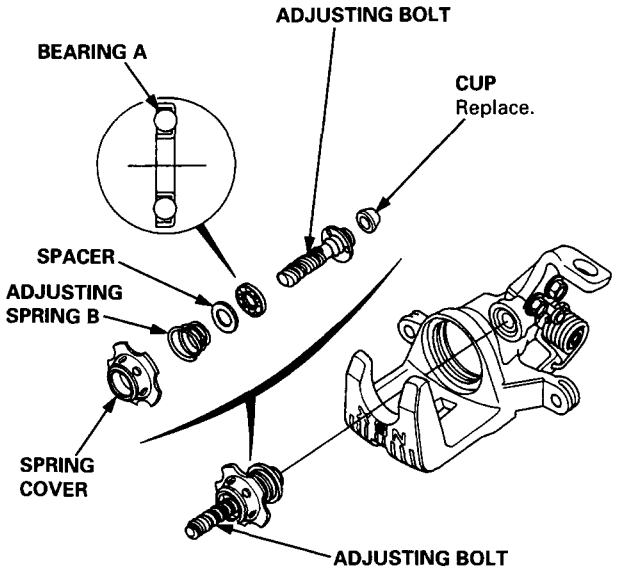

10. Adjust the special tool as shown.

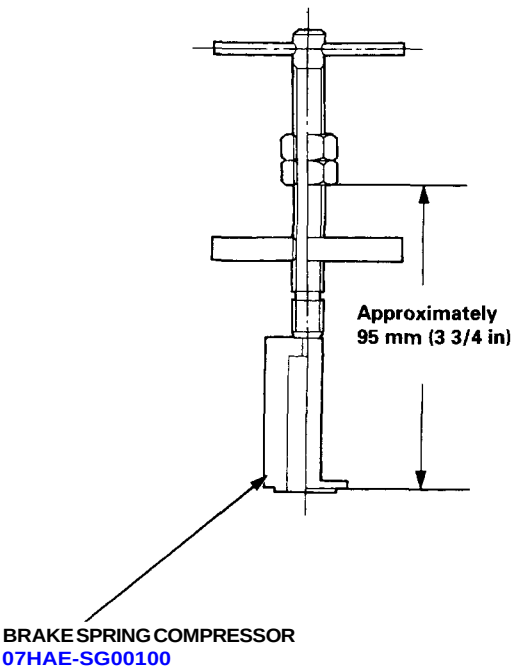

11. Install the special tool as shown.

12. Compress the spring until it bottoms out.

13. Check that the flared end of the spring cover is below the circlip groove.

14. Install the circlip, then remove the brake spring compressor.

    NOTE: Check that the circlip is seated in the groove properly.

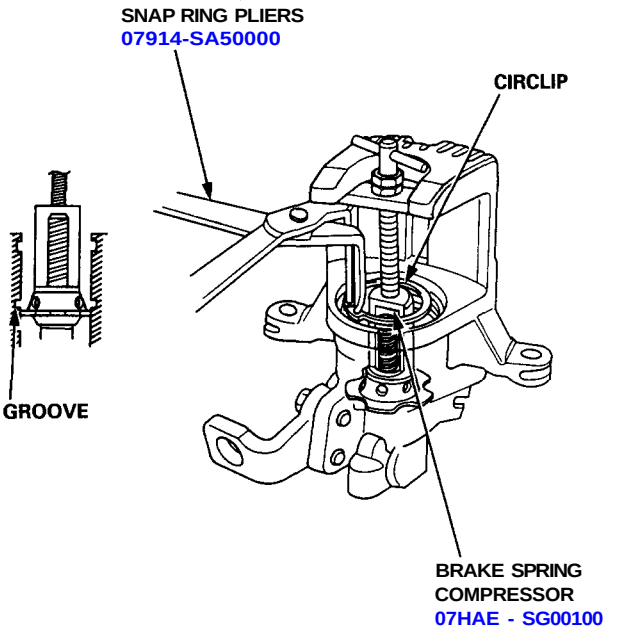

15. Install the adjusting nut, adjusting spring A, and washer, then secure with the circlip.

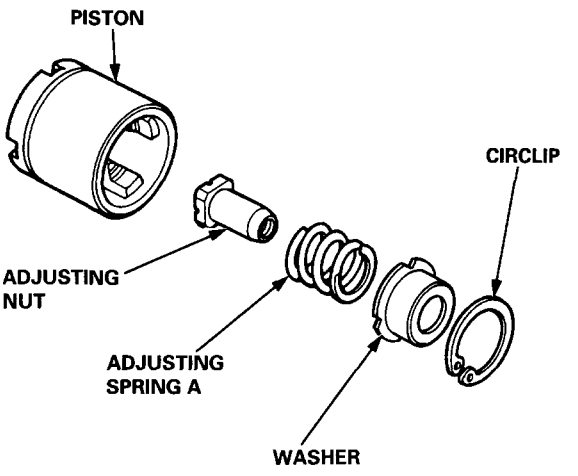

(cont'd)

Reassembly (cont'd)

16. Coat the new piston seal and piston boot with silicons grease, and install them in the caliper.

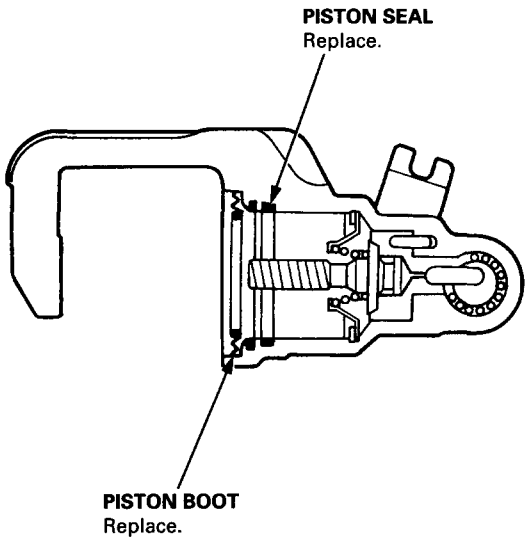

17. Coat the outside of the piston with silicone grease, and install it on the adjusting bolt while rotating it clockwise.

CAUTION: Avoid damaging the piston and piston boot.

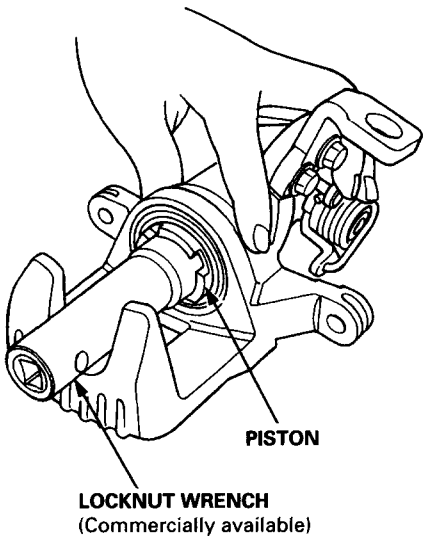

18. Install the brake pad retainers and brake pads.

19. Install the pad spring on the caliper.

20. Install the caliper on the caliper bracket, and tighten the caliper mounting bolts.

21. Connect the brake hose to the caliper with new sealing washers, and tighten the banjo bolt.

22. Connect the parking brake cable to the arm on the caliper.

23. Fill the brake reservoir up, and bleed the brake system (see page 19-11).

24. Operate the brake pedal several times, then adjust the parking brake lever.

    NOTE: Before adjustments, make sure the parking brake arm on the caliper touches the pin.

25. Install the caliper shield and tighten the bolts.

Brake Hoses/Lines

Inspection

1. Inspect the brake hoses for damage, deterioration, leaks, interference or twisting.
2. Check the brake lines for damage, rusting and leakage. Also check for bent brake lines.
3. Check for leaks at hose and line joints or connections, and retighten if necessary.
4. Check the master cylinder and ABS modulator unit for damage and leakage.

CAUTION: Replace the brake hose clip whenever the brake hose is serviced.

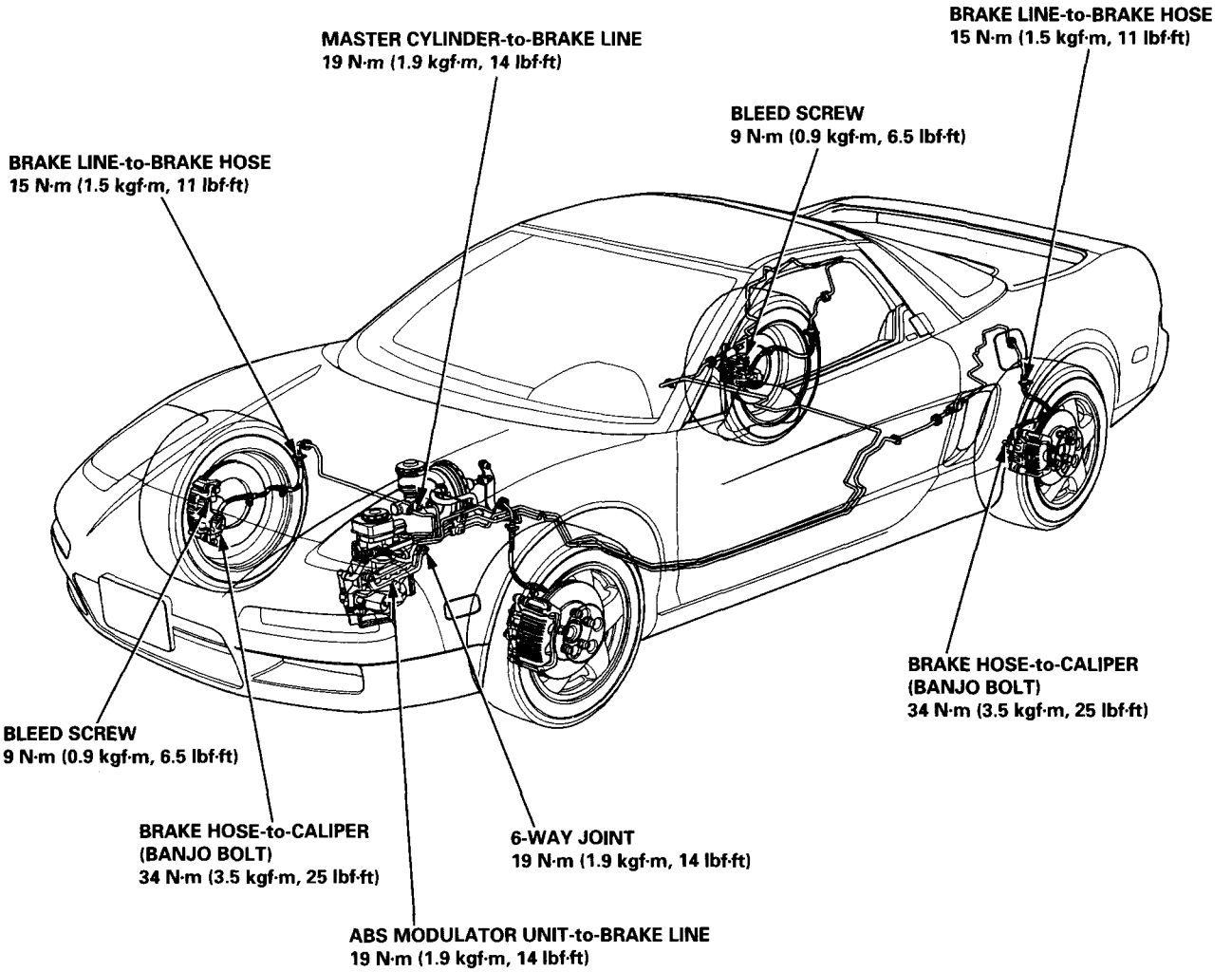

Parking Brake

Disassembly and Reassembly

CAUTION: The parking brake cables must not be bent or distorted. This will lead to stiff operation and premature cable failure.

☆: CORROSION RESISTANT BOLT

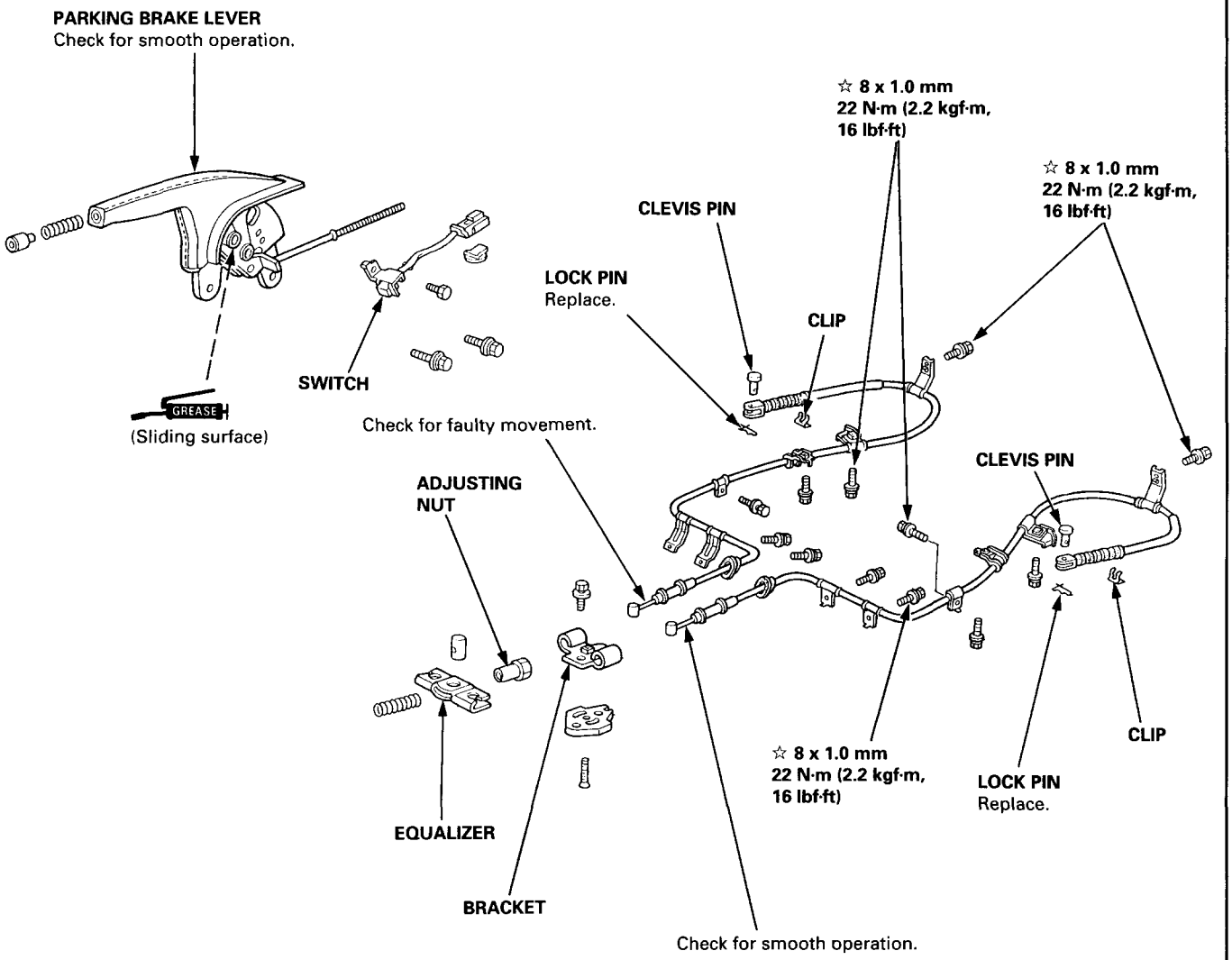

Anti-lock Brake System (ABS) Description

Features/Construction/Operation

General

In a conventional brake system, if the brake pedal is depressed excessively, the wheels can lock before the vehicle comes to a stop. In such a case, the stability of the vehicle is reduced if the rear wheels are locked, and maneuverability of the vehicle is reduced if the front wheels are locked, creating an extremely unstable condition.

The Anti-lock Brake System (ABS) modulates the pressure of the brake fluid applied to each caliper, thereby preventing the locking of the wheels, whenever the wheels are likely to locked due to be excessive braking. It then restores normal hydraulic pressure when there is no longer any possibility of wheel locking.

4-Channel Anti-lock Brake System (ABS) Features

- Increased braking stability can be achieved regardless of changing driving conditions.
- The maneuverability of the vehicle is improved as the system prevents the front wheels from locking.
- When the anti-lock brake system goes into action, kickback is felt on the brake pedal.
- The anti-lock brake system is equipped with a self-diagnosis function. When an abnormality is detected, the ABS indicator light comes on. The location of the abnormality can be diagnosed from the frequency of the system indicator light display blinks.
- This system has individual control of the front and rear wheels. Braking force is controlled on each of the four wheels independently, resulting in optimum braking efects on the four wheels.
  The system has a fail-safe function that allows normal braking if there's a problem with the anti-lock brake system.

Difference Between The 3-Channel And 4-Channel Anti-lock Brake System

Items	3-Channel	4-Channel
Gear Pulser	Front: 50 Rear: 50	Front: 47 Rear: 50
ABS Control Unit	12 and 18 pins	18 and 20 pins
Modulator Solenoid Unit	4 Pistons 3 Solenoid Valves	4 Pistons 4 Solenoid Valves
Service Check Connector	No	Yes
System Control Method	Front wheels controlled independently. Rear wheels controlled commonly	Four wheels controlled independently.
Rear Brakes are provided with Proportioning Control Valve function	Yes	Yes

Construction

In addition to the conventional braking system, the anti-lock brake system is composed of: gear pulsers attached to the rotating part of individual wheels; wheel sensors, which generate pulse signals in correspondence to the revolution of the gear pulsers; ABS control unit, which controls the working of the anti-lock brake system by performing calculations based on the signals from the individual wheel sensors and the individual switches; a modulator unit, which adjusts the hydraulic pressure applied to each caliper on the basis of the signals received from the ABS control unit; an accumulator, in which high-pressure brake fluid is stored; a pressure switch, which detects the pressure in the accumulator and transmits signals to the ABS control unit; a power unit, which supplies the high-pressure working fluid to the accumulator by means of a pump; a motor relay for driving the power unit; a fail-safe relay, which cuts off the solenoid valve ground circuit when the fail-safe device is at work; and, an ABS indicator light.

(cont'd)

Anti-lock Brake System (ABS) Description

Features/Construction/Operation (cont'd)

Master Cylinder

1. Construction

A tandem master cylinder with center valves is used to improve braking system safety.

The master cylinder has one reservoir tank which is connected to the cylinder sections by two small holes. It has two pistons - primary and secondary, which are crisscross connected with the calipers so that the fluid pressure works separately on each system (front right wheel & rear left wheel, and front left wheel & rear right wheel).

A stop bolt for controlling movement of the primary piston is provided at the side of the master cylinder body.

A reed switch for detecting the brake fluid volume is also provided on the cap of the reservoir tank.

2. Operation

When the brake pedal is depressed, the secondary piston is pushed through the brake booster and center valve B is closed so that the fluid pressure is generated on the secondary side. At the same time, the primary piston is pushed by the secondary fluid pressure and center valve A is closed so that braking fluid pressure is generated both on the primary and secondary sides.

When the brake pedal is released, the primary and secondary pistons are returned to the original positions by the brake fluid pressure and piston spring.

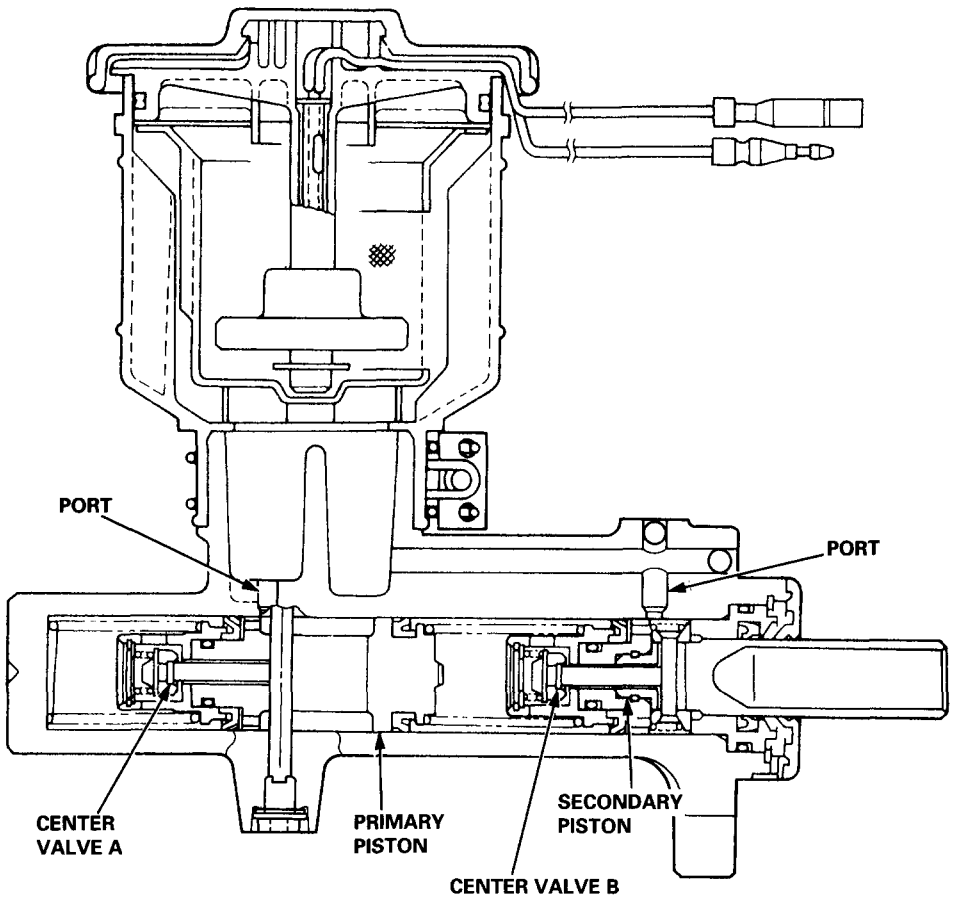

3. Responses when fluid is leaking

(1) In case of leaking from the primary system
Since the fluid pressure on the primary side does not rise, the primary piston is pushed by the fluid pressure of the secondary piston and the tension of the piston spring until the end hits on the cylinder; the braking is performed by the fluid pressure on the secondary side.

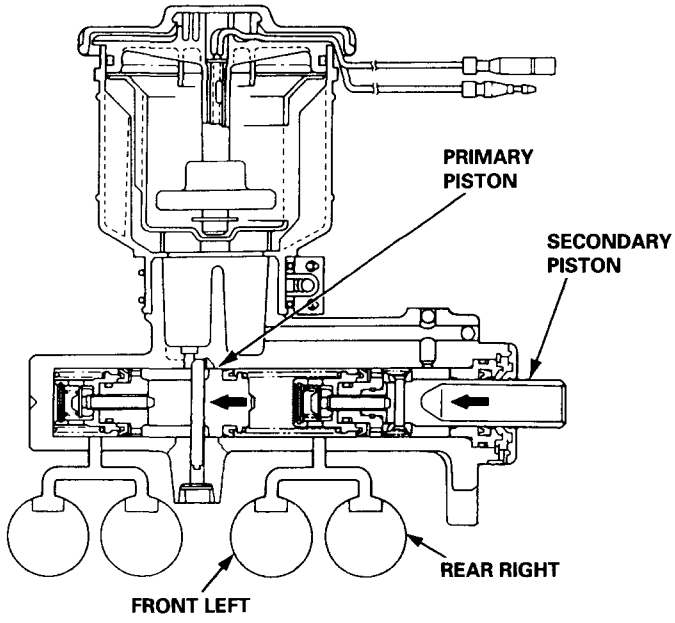

(2) In case of leaking from the secondary system
The secondary piston does not produce fluid pressure, keeps moving ahead, hits on the end surface of the primary piston so that the primary piston is pushed under the same condition as an ordinary rod; the braking is performed by the fluid pressure on the primary side.

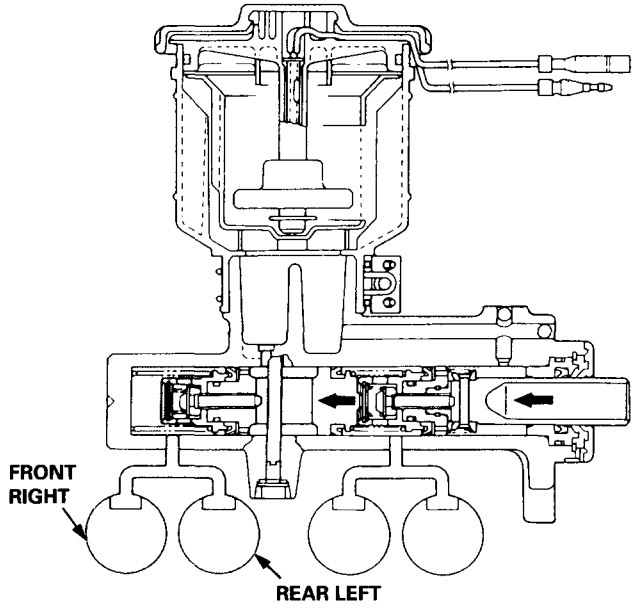

(cont'd)

Features/Construction/Operation (cont'd)

Wheel Sensor

The wheel sensor is a contactless type, and it detects the rotating speeds of a wheel. It is composed of a permanent magnet and coil. When the gear pulsers attached to the rotating parts of each wheel (rear wheel: outboard joint of the driveshaft, front: hub bearing unit) turn, the magnetic flux around the coil in the wheel sensor alternates, generating voltages with frequency in proportion to wheel rotating speed. These pulses are inputted into the ABS control unit, and the ABS control unit identifies the wheel speeds.

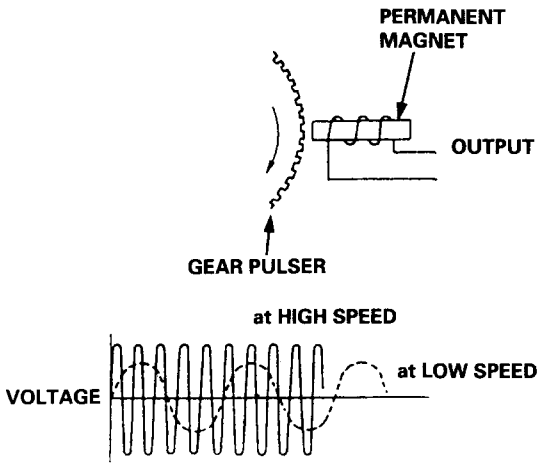

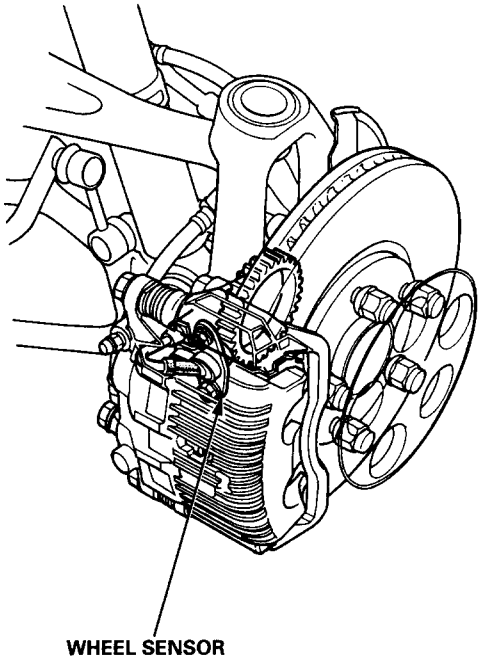

ABS Control Unit

The ABS control unit consists of a main function section, which controls the operation of anti-lock brake system, and sub-function, which controls the pump motor and "self-diagnosis."

1. Main Function
   The main function section of the ABS control unit performs calculations on the basis of the signals from each wheel sensor and controls the operation of the anti-lock brake system by putting into action the solenoid valves in the modulator unit for each front and rear brake.
2. Sub-Function
   The sub-function section gives driving signals to the pump motor and also gives "self-diagnosis" signals, necessary for backing up the anti-lock brake system.

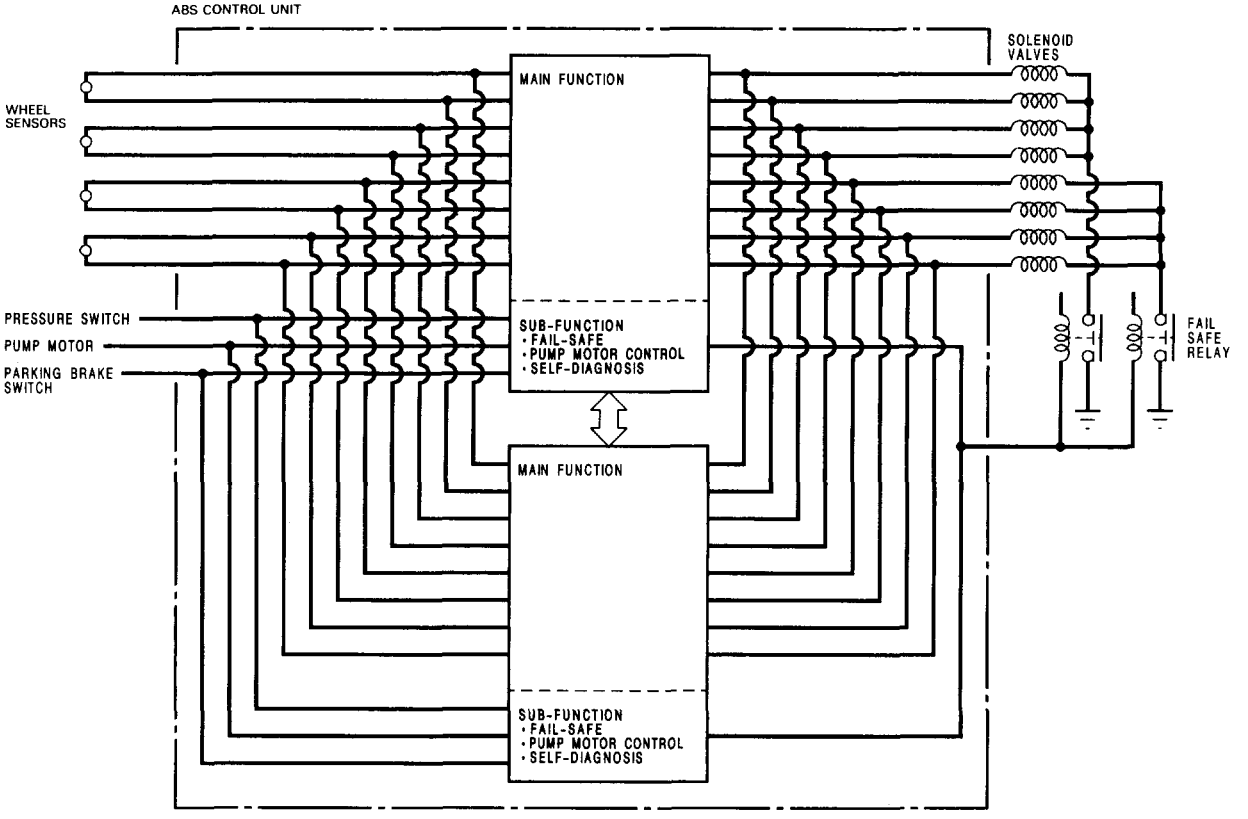

Self-Diagnostic Function

Since the anti-lock brake system modulates the braking pressure when a wheel is about to lock, regardless of the driver's intention, the system operation and the braking power will be impaired if there is a malfunction in the system. To prevent this possibility, at speeds above 6 mph (10 km/h), the self-diagnosis function monitors the main system functions. When an abnormality is detected, the ABS indicator light comes on.

There is also a check mode of the self-diagnosis system itself: when the ignition switch is first turned on, the ABS indicator light comes on and stays on for a few seconds after the engine starts, to signify that the self-diagnosis system is functional.

Fail-Safe Function

If an abnormality is detected, the ABS control unit turns off the fail-safe relays and motor relay. In this condition, the anti-lock brake system is prevented from functioning, yet the basic brake system continues to operate normally.

The ABS Indicator Light Comes On

1. When the fluid pressure pump runs more than 120 seconds.
2. When the parking brake is applied for more than 30 seconds while the vehicle is being driven.
3. When the rear wheel(s) is (are) locked more than a specified time.
4. When the wheel rotation signal is not transmitted due to faulty wire or sensor.
5. When the operation time of the solenoid valve(s) exceeds a predetermined valve, and the ABS control unit finds an open in the solenoid circuit.
6. When the output signals from both main functions in the ABS control unit are not transmitted to the solenoid valve(s).

(cont'd)

Anti-lock Brake System (ABS) Description

Features/Construction/Operation (cont'd)

Modulator Unit

Modulators and solenoid valves for each wheel are integrated in the modulator unit.
The modulators for front and rear brakes are of independent construction.
The solenoid valve features quick response (5 ms or less).
The inlet and outlet valves are integrated in the solenoid valve unit.

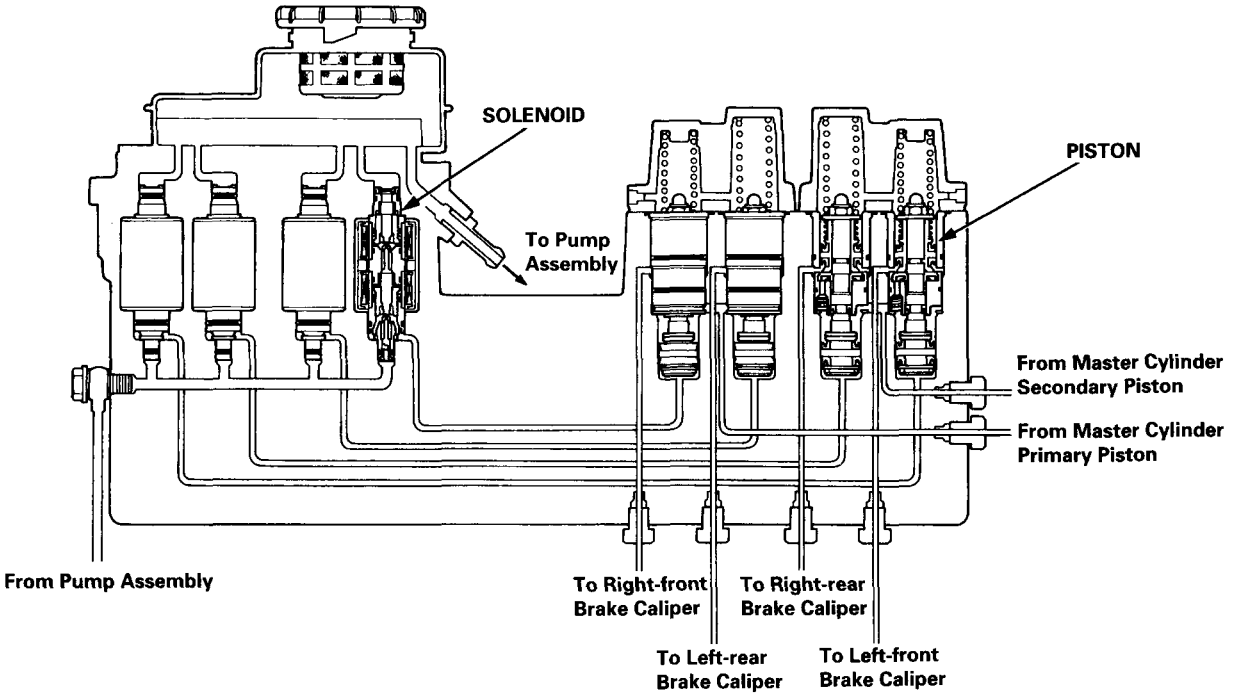

Accumulator

The accumulator is a pneumatic type which accumulates high-pressure brake fluid fed from the pump incorporated in the power unit. When the anti-lock brake system operates, the accumulator feeds high-pressure brake fluid to the modulator valve via the inlet side of the solenoid valve.

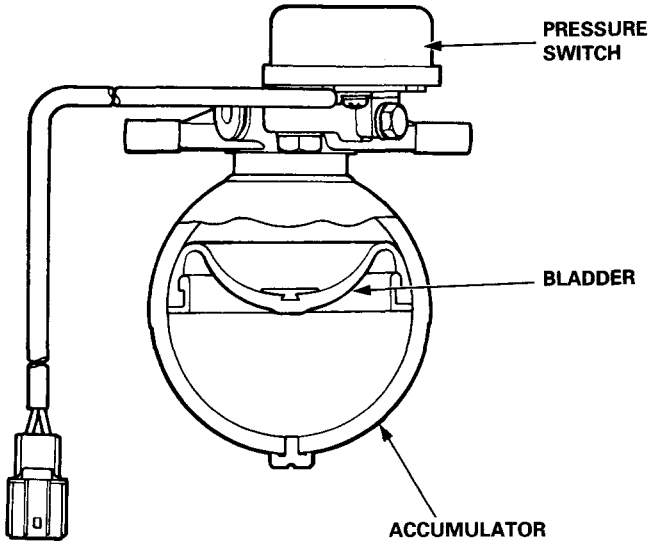

Pressure Switch

The pressure switch monitors the pressure accumulation (pressure from the pump) in the accumulator and is turned off when the pressure becomes lower than a prescribed level. When the pressure switch is turned off, the switching signal is sent to the ABS control unit. Upon receiving the signal, the ABS control unit activates the pump motor relay to operate the motor. If the pressure doesn't reach the prescribed value, the ABS indicator light is turned on.

Operation

When the pressure in the accumulator rises, the Bourdon tube in the pressure switch deforms outwards. When the free end of the Bourdon tube moves more than the prescribed amount, the micro-switch is activated by the force of the spring attached to the sensing lever. When the pressure in the accumulator decreases due to anti-lock brake system operations, the Bourdon tube moves in the direction opposite to the one described above, and the micro-switch is eventually turned off. Upon receiving this signal, the ABS control unit activates the motor relay to operate the motor.

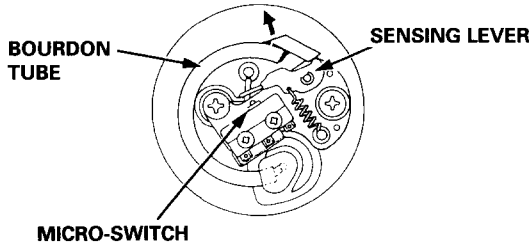

Power Unit

The power unit consists of a motor and a plunger-type pump. This unit transmits the revolution of the motor to the plunger by way of an eccentric bearing and supplies high-pressure brake fluid to the accumulator by the effect of the reciprocating movement of the plunger.

When the pressure in the accumulator drops below the prescribed pressure level, the pressure switch gives an OFF-signal. The ABS control unit turns the motor relay ON to start the operation of the pump, upon the reception of this signal and a signal from the wheel sensor that the vehicle is running at a speed greater than 6 mph (10 km/h). When the pressure in the accumulator attains the prescribed pressure, the ABS control unit turns the motor relay OFF approximately three seconds after the unit receives an ON-signal from the pressure switch. By this, the high-pressure in the accumulator is maintained.

The ABS control unit turns the pump off and lights the system indicator light if the accumulator pressure does not reach the prescribed level after the pump has run continuously for 120 seconds.

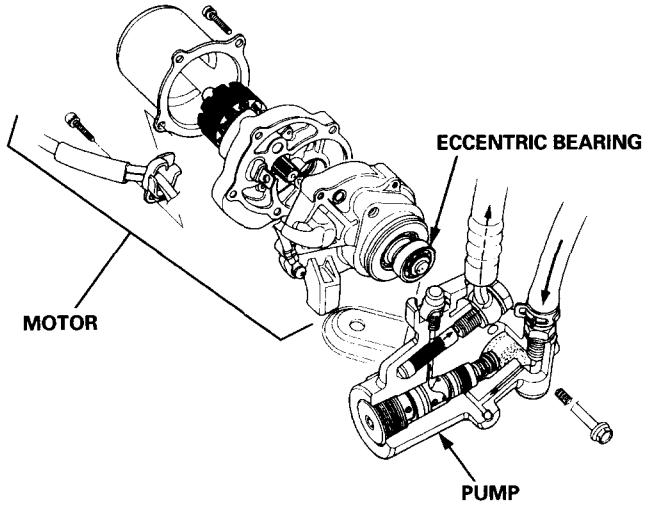

(cont'd)

Anti-lock Brake System (ABS) Description

Features/Construction/Operation (cont'd)

Operation

1. Ordinary Braking Function

In ordinary brake operations, the cut-off out valve in the modulator is open to transmit the hydraulic pressure from the master cylinder to the brake calipers via the chamber A and the chamber B.

The chamber C is connected to the reservoir through the outlet valve which is normally open. It is also connected to the hydraulic pressure source (pump, accumulator, pressure switch, etc.) via the inlet valve which is normally closed. The chamber D serves as an air chamber. Under these conditions, the pressures of the chambers C and D are maintained at about the atmospheric pressure, permitting regular braking operations.

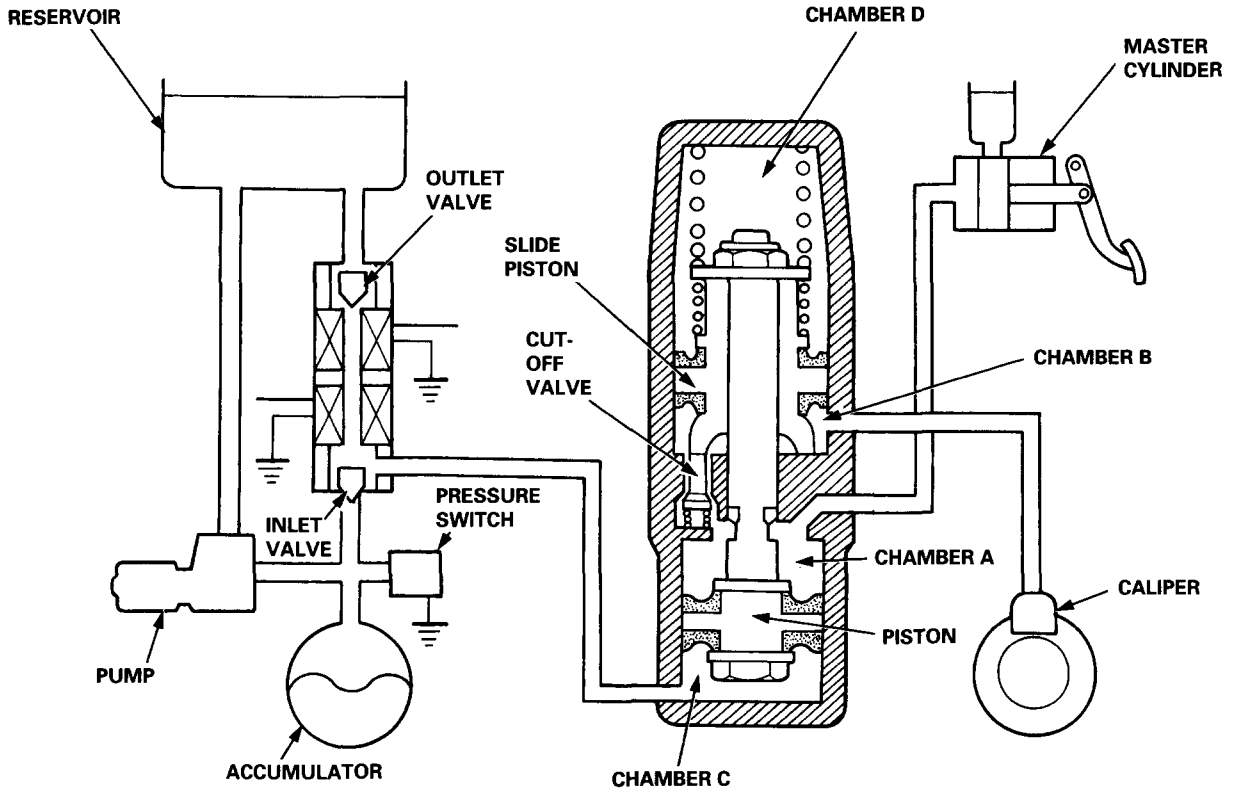

If brake inputs (force exerted on brake pedal) are excessively large and a possibility of wheel locking occurs, the control unit operates the solenoid valve, closing the outlet valve and opening the inlet valve. As a result, the high pressure is directed into chamber C, the piston is pushed upward, causing the slide piston to move upward and the cut-off valve to close.

As the cut-off valve closes, the flow from the master cylinder to the caliper is interrupted, the volume of chamber B, which is connected to the caliper, increases, and the fluid pressure in the caliper declines.

When both of the two valves, inlet and outlet, are closed (when only the outlet valve is activated) the pressure in the caliper is maintained constant.

When the possibility of wheel locking ceases, it is necessary to restore the pressure in the caliper. The solenoid valve is therefore turned off (outlet valve: open, inlet valve closed).

Process	Caliper Pressure	Outlet Valve		Inlet Valve	
		Electric Power	Hydraulic Circuit	Electric Power	Hydraulic Circuit
Caliper pressure declining	Down	ON	Closed	ON	Open
Caliper pressure constant	Hold	ON	Closed	OFF	Closed
Caliper pressure increasing	Up	OFF	Open	OFF	Closed

Slide Piston Function

When the vehicle is used on rough roads where the tires sometimes lose adhesion, the anti-lock brake system may function excessively, causing an excessively large volume of brake fluid to flow into the chamber C. As this occurs, the piston is moved excessively, resulting in an abnormal loss of pressure in the chamber B. In order to overcome this problem, the slide piston is kept in the proper position by the spring force to avoid a negative pressure in the chamber B.

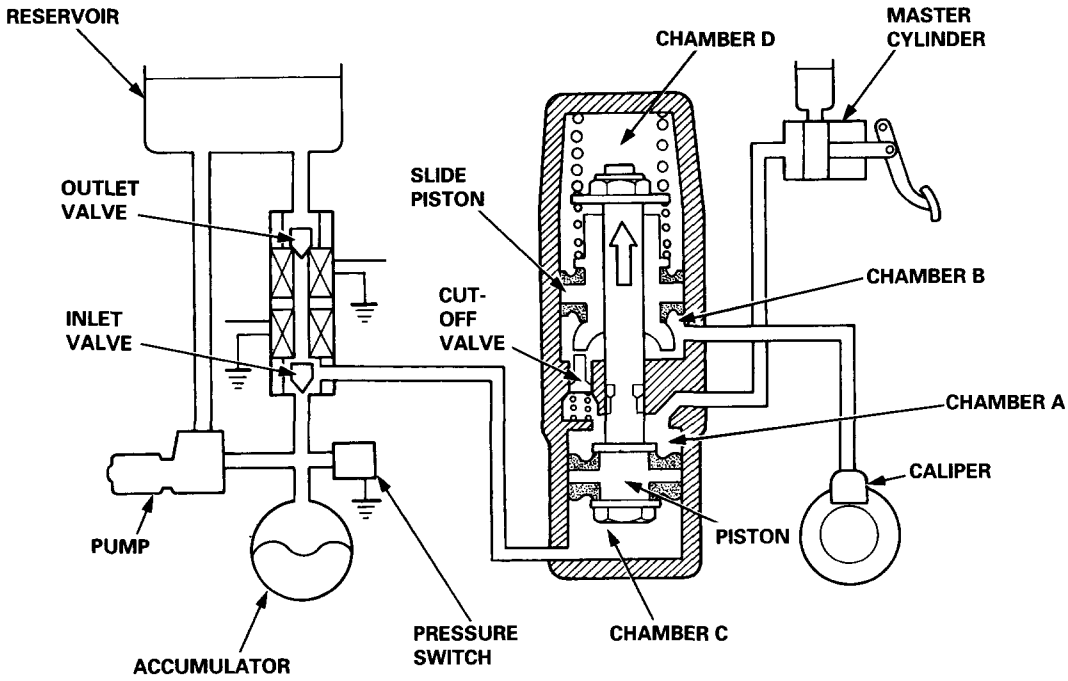

Kickback

When anti-lock brake system is functioning, the piston moves upward, the volume of chamber B increases, and the fluid pressure on the caliper side is reduced. At the same time, the volume of chamber A is reduced and the brake fluid is returned to the master cylinder. When the brake fluid is pushed back to the master cylinder, the driver can feel the functioning of the anti-lock brake system because the brake pedal is kicked back.

Component Locations

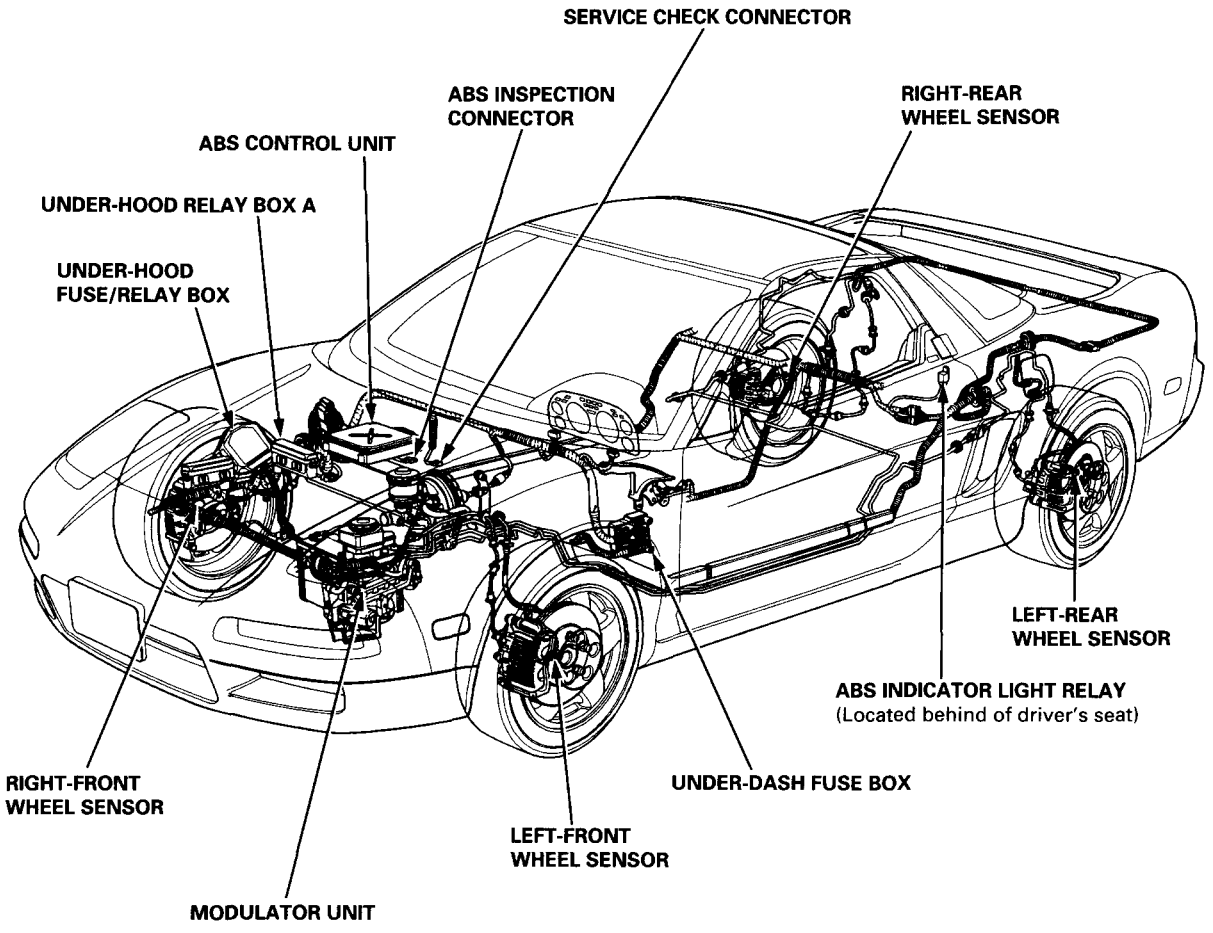

GAUGE ASSEMBLY

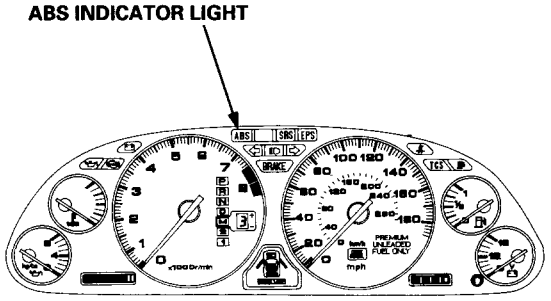

UNDER-HOOD FUSE/RELAY BOX

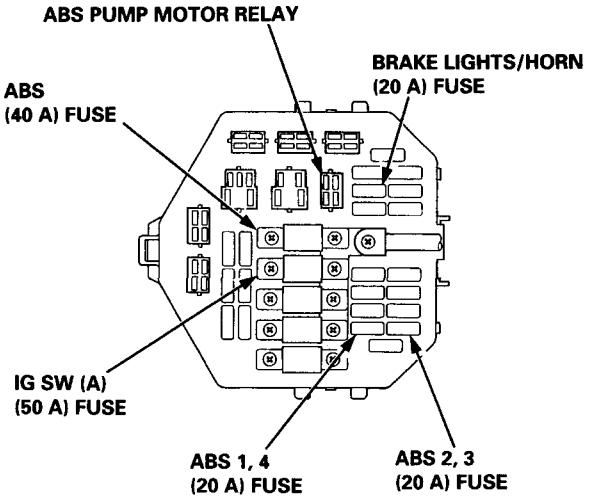

UNDER-DASH FUSE BOX

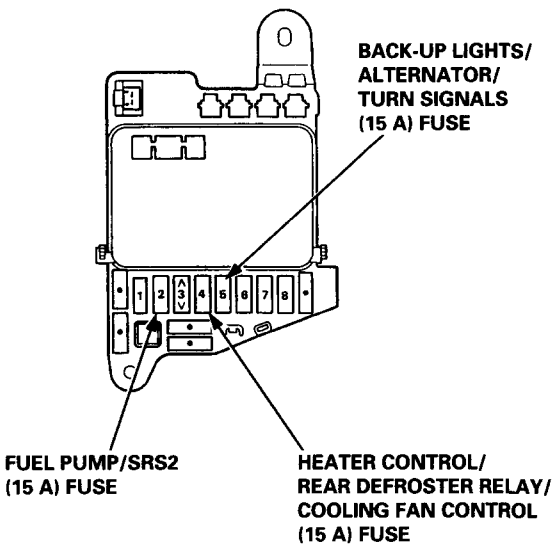

UNDER-HOOD RELAY BOX A

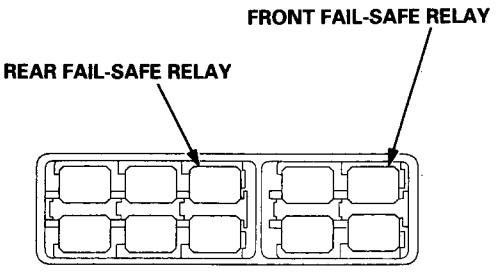

ABS Control Unit Terminal Arrangement

ABS CONTROL UNIT 20P CONNECTOR

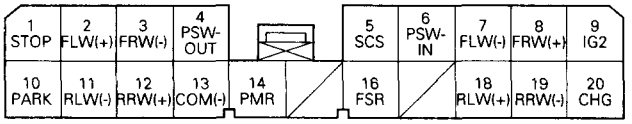

Wire side of female terminals

VB: Battery Voltage

Terminal number	Wire color	Terminal sign (Terminal name)	Description	Measurement			
				Terminal	Conditions (Ignition switch ON (II))		Voltage
1	GRN/WHT	STOP	Detects brake switch signal	1-GND	Brake pedal	Depressed	VB
						Released	Below 0.3 V
2	GRN/BLU	FLW (+) (Front-left wheel positive)	Detects left-front wheel sensor signal	2-7	Turns wheel slowly		AC: 0.07 V or above Oscilloscope: 0.2 Vp-p or above
3	GRN	FRW (–) (Front-right wheel negative)	Detects right-front wheel sensor signal	3-8			
4	YEL	PSW-OUT (Pressure switch outlet)	Detects pressure switch signal	4-GND	Pump motor	ON	Approx. 5 V
						OFF	Approx. 2.5 V
5	BLU	SCS (Service check signal)	Detects service check connector signal (DTC indication)	5-GND	SCS service connector	Connected	Below 0.3 V
						Disconnected	Approx. 5 V
6	ORN	PSW-IN (Pressure switch inlet)	Detects pressure switch signal	6-GND	Pump motor	ON	Approx. 1 V
						OFF	Approx. 2.5 V
7	BRN	FLW (–) (Front-left wheel negative)	Detects left-front wheel sensor signal	2-7	Turns wheel slowly		AC: 0.07 V or above Oscilloscope: 0.2 Vp-p or above
8	GRN/BLK	FRW (+) (Front-right wheel positive)	Detects right-front wheel sensor signal	3-8			
9	YEL/BLK	IG2 (Ignition 2)	Detects ignition switch IG2 signal	9-GND	Ignition switch	ON (II)	VB
						Start (III)	Below 0.3 V

VB: Battery Voltage

Terminal number	Wire color	Terminal sign (Terminal name)	Description	Measurement				
				Terminal	Conditions (Ignition switch ON (II))			Voltage
10	GRN/RED	PARK (Parking)	Detects parking brake switch signal	10-GND	Parking brake	Pulled		Below 0.3 V
						Released		VB
11	GRY	RLW (–) (Rear-left wheel negative)	Detects left-rear wheel sensor signal	11-18	Turns wheel slowly			AC: 0.07 V or above
12	GRN/YEL	RRW (+) (Rear-right wheel positive)	Detects right-rear wheel sensor signal	12-19				Oscilloscope: 0.2 Vp-p or above
13	BLK/ORN	COM (–) (Common negative)	Ground for ALB checker when it is connected	13-GND				Below 0.3 V
14	YEL/RED	PMR (Pump motor relay)	Drives pump motor relay	14-GND	ABS Indicator light	OFF	Pump motor ON	Below 0.3 V
							Pump motor OFF	VB
						ON		Below 0.3 V
16	YEL/GRN	FSR (Fail-safe relay)	Drives fail-safe relay (Fail-safe relay is turned OFF to shut off the power source to the solenoid when problem occurs.)	15-GND	ABS indicator light		ON	Below 0.3 V
							OFF	VB
18	LT BLU	RLW (+) (Rear-left wheel positive)	Detects left-rear wheel sensor signal	11-18	Turns wheel slowly			AC: 0.07 V or above
19	BLU/YEL	RRW (–) (Rear-right wheel negative)	Detects right-rear wheel sensor signal	12-19				Oscilloscope: 0.2 Vp-p or above
20	WHT/BLU	CHG (Charge)	Detects engine operation (Activates ABS control unit with engine ON.)	20-GND	Engine	Running		VB
						Stops		Below 0.3 V

ABS Control Unit Terminal Arrangement

ABS CONTROL UNIT 18P CONNECTOR

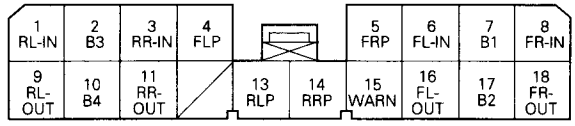

Wire side of female terminals

VB: Battery Voltage

Terminal number	Wire color	Terminal sign (Terminal name)	Description	Measurement			
				Terminal	Conditions (Ignition switch ON (II))		Voltage
1	RED/GRN	RL-IN (Rear-left inlet solenoid valve)	Drives left-rear inlet solenoid valve	1-GND	ABS indicator light (Engine started)	ON	Below 0.3 V
						OFF	VB
2	WHT/BLK	B3 (Battery 3)	Power source for solenoid valve	2-GND			VB
3	RED/WHT	RR-IN (Rear-right inlet solenoid valve)	Drives right-rear inlet solenoid valve	3-GND	ABS indicator light (Engine started)	ON	Below 0.3 V
						OFF	VB
4	ORN/BLK	FLP (Front-left pulse)	Outputs left-front wheel sensor signal	4-GND	Turns wheel slowly		5 V ↔ 0 V
5	ORN/RED	FRP (Front-right pulse)	Outputs right-front wheel sensor signal	5-GND			
6	RED/BLU	FL-IN (Front-left inlet solenoid valve)	Drives left-front inlet solenoid valve	6-GND	ABS indicator light (Engine started)	ON	Below 0.3 V
						OFF	VB
7	WHT/GRN	B1 (Battery 1)	Power source for solenoid valve	7-GND			VB
8	RED/BLK	FR-IN (Front-right inlet solenoid valve)	Drives right-front inlet solenoid valve	8-GND	ABS indicator light (Engine started)	ON	Below 0.3 V
						OFF	VB

VB: Battery Voltage

Terminal number	Wire color	Terminal sign (Terminal name)	Description	Measurement			
				Terminal	Conditions (Ignition switch ON (II))		Voltage
9	YEL/GRN	RL-OUT (Rear-left outlet solenoid valve)	Drives left-rear outlet solenoid valve	9-GND	ABS indicator light (Engine started)	ON	Below 0.3 V
						OFF	VB
10	WHT/GRN	B4 (Battery 4)	Power source for solenoid valve	10-GND			VB
11	YEL/WHT	RR-OUT (Rear-right outlet solenoid valve)	Drives right-rear outlet solenoid valve	11-GND	ABS indicator light (Engine started)	ON	Below 0.3 V
						OFF	VB
13	GRY/WHT	RLP (Rear-left pulse)	Outputs left-rear wheel sensor signal	13-GND	Turns wheel slowly		5 V ↔ 0 V
14	BLU/ORN	RRP (Rear-right pulse)	Outputs right-rear wheel sensor signal	14-GND			
15	BLU/WHT	WARN (Warning)	Drives ABS indicator light relay (ABS control unit turns off ABS indicator light relay when ABS is normal)	15-GND	ABS indicator light (Engine started)	ON	VB
						OFF	Below 0.3 V
16	YEL/BLU	FL-OUT (Front-left outlet solenoid valve)	Drives left-front outlet solenoid valve	16-GND	ABS indicator light (Engine started)	ON	Below 0.3 V
						OFF	VB
17	WHT/BLK	B2 (Battery 2)	Power source for solenoid valve	17-GND			VB
18	YEL/BLK	FR-OUT (Front-right outlet solenoid valve)	Drives right-front outlet solenoid valve	18-GND	ABS indicator light (Engine started)	ON	Below 0.3 V
						OFF	VB

Troubleshooting Precautions

ABS Indicator Light:

The ABS indicator light comes on for three seconds and then goes off when the control unit detects no problem during the initial diagnosis right after the engine starts. The ABS indicator light comes on, and the ABS control unit memorizes the diagnostic trouble code (DTC) under certain conditions.

- The parking brake is applied for more than 30 seconds while the vehicle is being driven. (DTC 2-1)
- The vehicle loses traction when starting from a stuck condition on a muddy, snowy, or sandy road. (DTC 4-1, 4-2, 4-4, 4-8)
- The vehicle loses traction, and the front wheels spin for more than one minute when starting from a stuck condition on a muddy, snowy, or sandy road. (DTC 4-8)
- Tire adhesion is lost due to excessive cornering speed. (DTC 5, 5-4, 5-8)
- The vehicle is interfered by strong radio waves (noise), for example, illegal radio, etc. (DTC 8-2)

NOTE: If there is any trouble in the system, the ABS indicator light comes on during driving.

Diagnostic Trouble Code (DTC):

- When the control unit detects a problem and the ABS indicator light comes on, the control unit memorizes the DTC.
- The control unit has three memory registers. When a problem occurs, the control unit stores the DTC in the first memory register.
- The most recent DTC is indicated first, and the oldest DTC is indicated last.
- The DTCs are erased from the control unit when the ABS control unit +B2 power supply or connector is disconnected.
- The control unit's memory can be erased by disconnecting the ABS 2, 3 fuse for more than three seconds.

Self-diagnosis:

- There are two self-diagnoses described below.
  ① Initial diagnosis: Performed right after the engine starts until the ABS indicator light goes off.
  ② Regular diagnosis: Continuously performed (under some conditions) after the ABS indicator light goes off until the engine stops.
- The CPU (central processing unit) controls the following when it detects a problem during self-diagnosis:
  ① Turns the ABS indicator light ON.
  ② Turns the front and rear fail-safe relays off.
  ③ Stops the ABS control.
  ④ Stops the ABS pump.
  ⑤ After the DTC is stored in the control unit, the CPU stops self-diagnosis.

Troubleshooting:

- When two or three DTCs are stored in the control unit, perform troubleshooting for the DTC that appears first.
- When a customer's reported problem cannot be verified on the vehicle, ask the customer about the conditions when the ABS indicator light came ON, and test-drive the vehicle under those conditions, if possible. When the ABS indicator light does not come ON during the test, check for loose terminals and check by shaking the harnesses and connectors while following the flowchart.
- After the repair is completed, perform the ABS function test or test-drive the vehicle, and check that the ABS indicator light does not come ON again during the test.

Diagnostic Trouble Code (DTC)

Diagnostic Trouble Code (DTC) Indication

NOTE: This operation can also be done with the Honda PGM Tester.

1. Connect the SCS service connector to the service check connector (2P) under the glove box.
2. Turn the ignition switch ON (II), but do not start the engine.
3. The blinking frequency indicates the DTC.

   NOTE: If the DTC is not memorized, the ABS indicator light goes off for 3.6 seconds and then stays on.
4. Turn the ignition switch OFF, and remove the SCS service connector.

   NOTE: The Malfunction Indicator Lamp (MIL) will stay on after the engine is started if the SCS service connector is connected.
5. Remove the ABS 2, 3 (20 A) fuse for at least three seconds to erase the DTC.

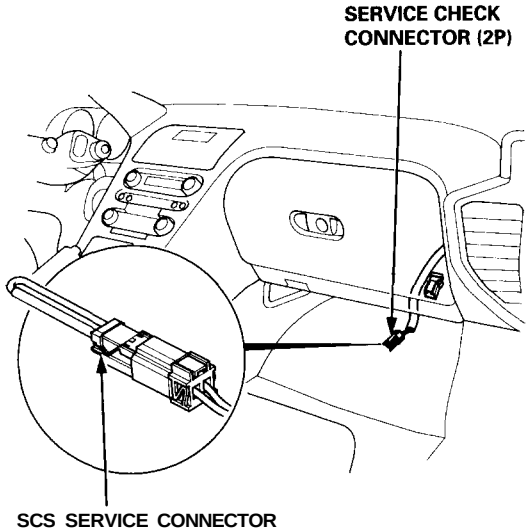

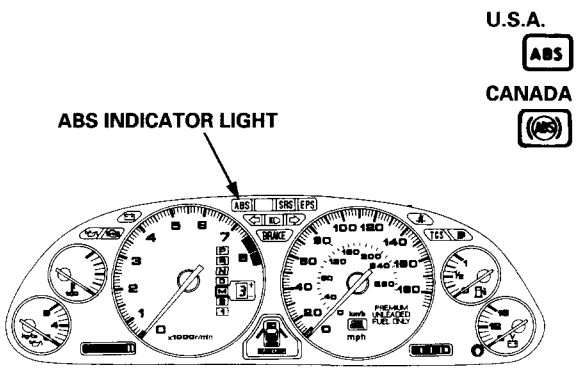

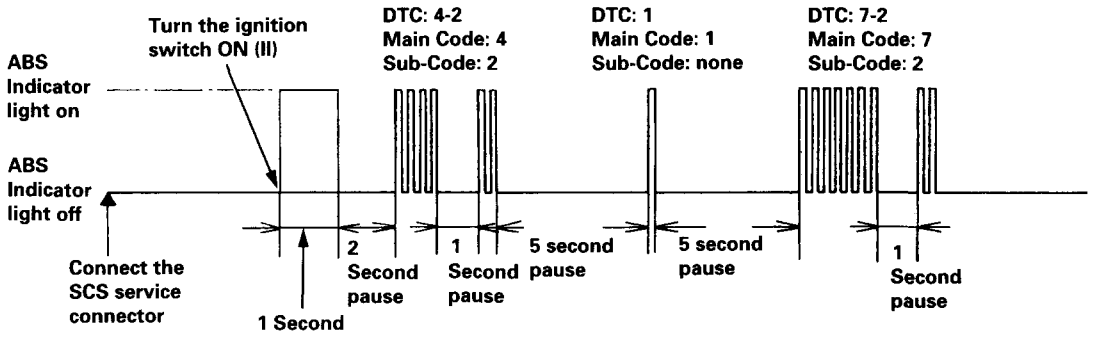

Troubleshooting Index

DTC	ABS INDICATOR LIGHT	DIAGNOSIS/SYMPTOM	DETECTION TIMING		PROBLEM LOCATION	REFER TO PAGE
			INITIAL DIAGNOSIS	REGULAR DIAGNOSIS		
NO DTC	OFF	ABS indicator light does not come on when ignition switch is turned ON (II).				19-50
	ON	ABS indicator light does not go off after engine is started (No DTC).				19-52
1	ON	Pump motor over-run	○	○		19-54
1-4	ON	Pressure switch		○		19-58
2	ON	Parking brake		○		19-59
3-1	ON	Pulser(s)		○	FR	19-61
3-2					FL	
3-4					RR	
3-8					RL	
4-1	ON	Wheel sensor		○	FR	19-62
4-2					FL	
4-4					RR	
4-8					RL	
5	ON	Rear wheel lock		○	RR/RL	19-63
5-4					RR	
5-8					RL	
6	ON	Fail-safe relay	○	○	FRONT/REAR	19-64
6-1					FRONT	19-65
6-4					REAR	19-67
7-1	ON	Solenoid	○	○	FR	19-69
7-2					FL	
7-4					RR	19-71
7-8					RL	
8-2	ON	Electrical Noise		○		19-73
8-4	ON	ABS control unit	○	○		19-73

ABS Function Test

NOTE: The ABS system can be checked with the ALB checker or with the Honda PGM Tester.

1. Raise the vehicle off the ground, and support it with safety stands.

2. Check that there is no brake drag.

3. Turn the ignition switch ON (II), and confirm that the ABS indicator light comes on.

   If the ABS indicator light does not come on, follow the troubleshooting on page 19-50.

4. **Honda PGM Tester:** Connect the PGM Tester as described in the Honda PGM Tester Anti-Lock Brake System (ABS) Vehicle System Supplement. Follow the tester's prompts instead of steps 5 through 11 of this procedure.

   ALB Checker: With the ignition switch OFF, disconnect the ABS inspection connector (6P) from the connector cover located under the glove box, and connect it to the ALB checker. Continue with steps 5 through 11 of this procedure.

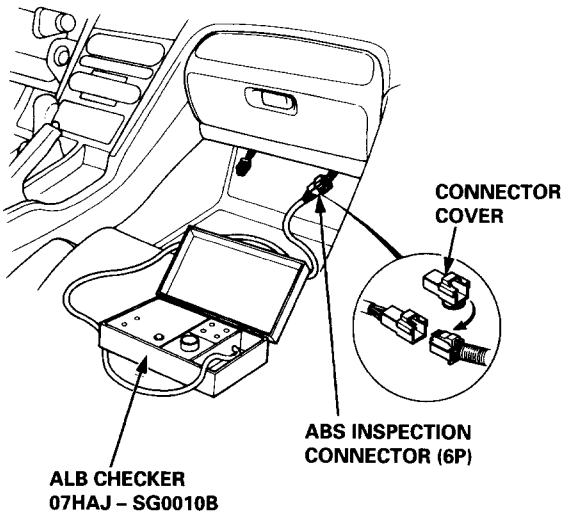

5. Shift the transmission to neutral or [P] position.

6. Start the engine and release the parking brake.

7. Turn the Mode Selector switch to "1".

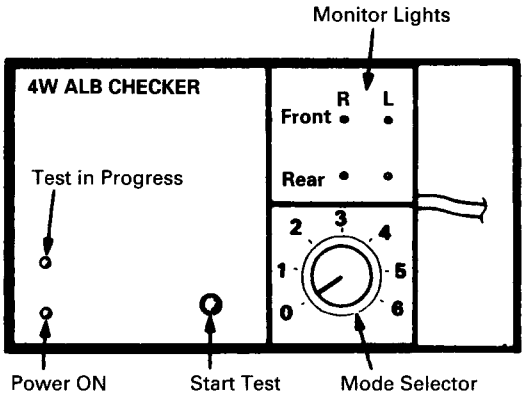

8. Push the Start Test switch. The ABS indicator light should not come on while the Test in Progress light is on.

   If the ABS indicator light comes on, confirm the DTC and perform the appropriate troubleshooting for the code.

   NOTE: Do not turn the Mode Selector switch when the Test in Progress light is on. Damage to the ALB checker can result.

9. Turn the Mode Selector switch to "2".

10. Depress the brake pedal firmly, and push the Start Test switch. The ABS indicator light should not come on while the Test in Progress light is on. There should be kickback on the brake pedal.

    Have the assistant check that the wheel controlled by the ABS can be rotated by hand when there is kickback on the brake pedal.

    - If the ABS indicator light comes on, confirm the DTC and perform the appropriate troubleshooting for the code.
    - If the ABS indicator light does not come on and the wheel controlled by the ABS cannot be rotated, check the connection of the modulator wire harness connectors. If the connections are OK, replace the modulator unit.

    NOTE: The kickback should occur approximately 20 seconds after the Start Test switch is pushed.

11. Turn the Mode Selector switch to "3", "4" and "5". Perform step 10 for each of the test mode positions.

Operation Sequence Simulated by Modes of ALB Checker

NOTE: The wheel sensors and sensor wire harnesses are not checked by the ALB checker.

Mode 1: Sends the simulated driving signal 0 mph (0 km/h) → 113 mph (180 km/h) → 0 mph (0 km/h) of each wheel to the ABS control unit to check the system under the normal driving. There should be no kickback.

SIMULATED DRIVING SIGNAL

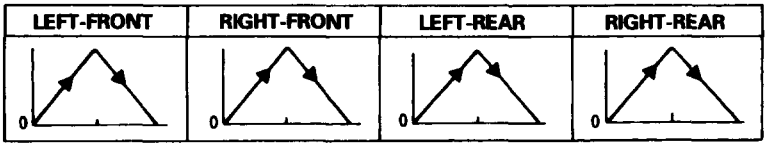

Mode 2: Sends the driving signal of each wheel, then sends the lock signal of the left-rear wheel to the ABS control unit to check the system under left-rear wheel lock. There should be kickback.

SIMULATED DRIVING SIGNAL

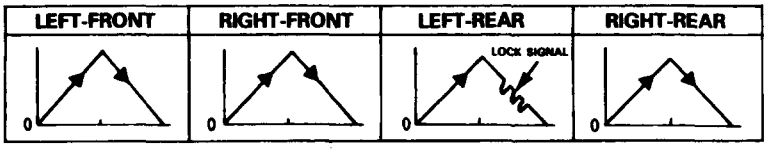

Mode 3: Sends the driving signal of each wheel, then sends the lock signal of the right-rear wheel to the ABS control unit to check the system under right-rear wheel lock. There should be kickback.

SIMULATED DRIVING SIGNAL

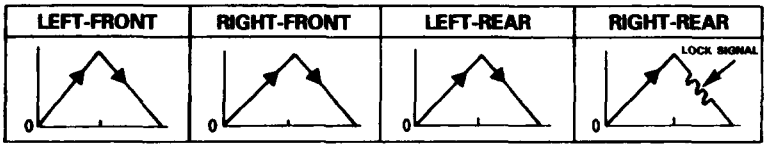

Mode 4: Sends the driving signal of each wheel, then sends the lock signal of the left-front wheel to the ABS control unit to check the system under left-front wheel lock. There should be kickback.

SIMULATED DRIVING SIGNAL

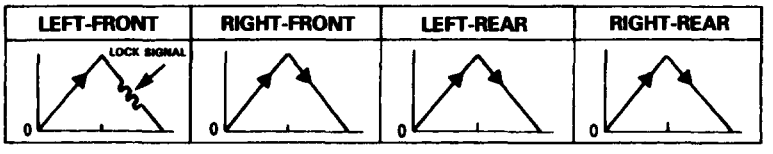

Mode 5: Sends the driving signal of each wheel, then sends the lock signal of the right-front wheel to the ABS control unit to check the system under right-front wheel lock. There should be kickback.

SIMULATED DRIVING SIGNAL

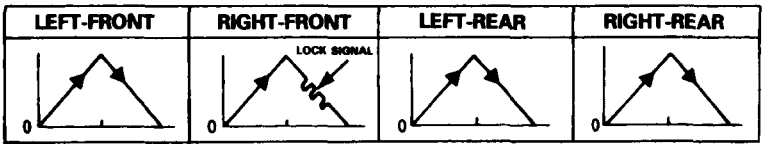

Inspection Points

If the ABS indicator light comes on and the system stops during the inspection, confirm the DTC and perform the appropriate troubleshooting for the code.

If there is no kickback in modes 2 through 5, and the ABS indicator light does not come on, the following items are probable causes:

- Pressure switch stuck ON
- Clogged or stuck solenoid outlet valve
- Modulator wire harness connectors improperly connected

Hydraulic System

Hydraulic Connections

CAUTION: Do not spill brake fluid on the vehicle; it may damage the paint; if brake fluid does contact the paint, wash it off immediately with water.

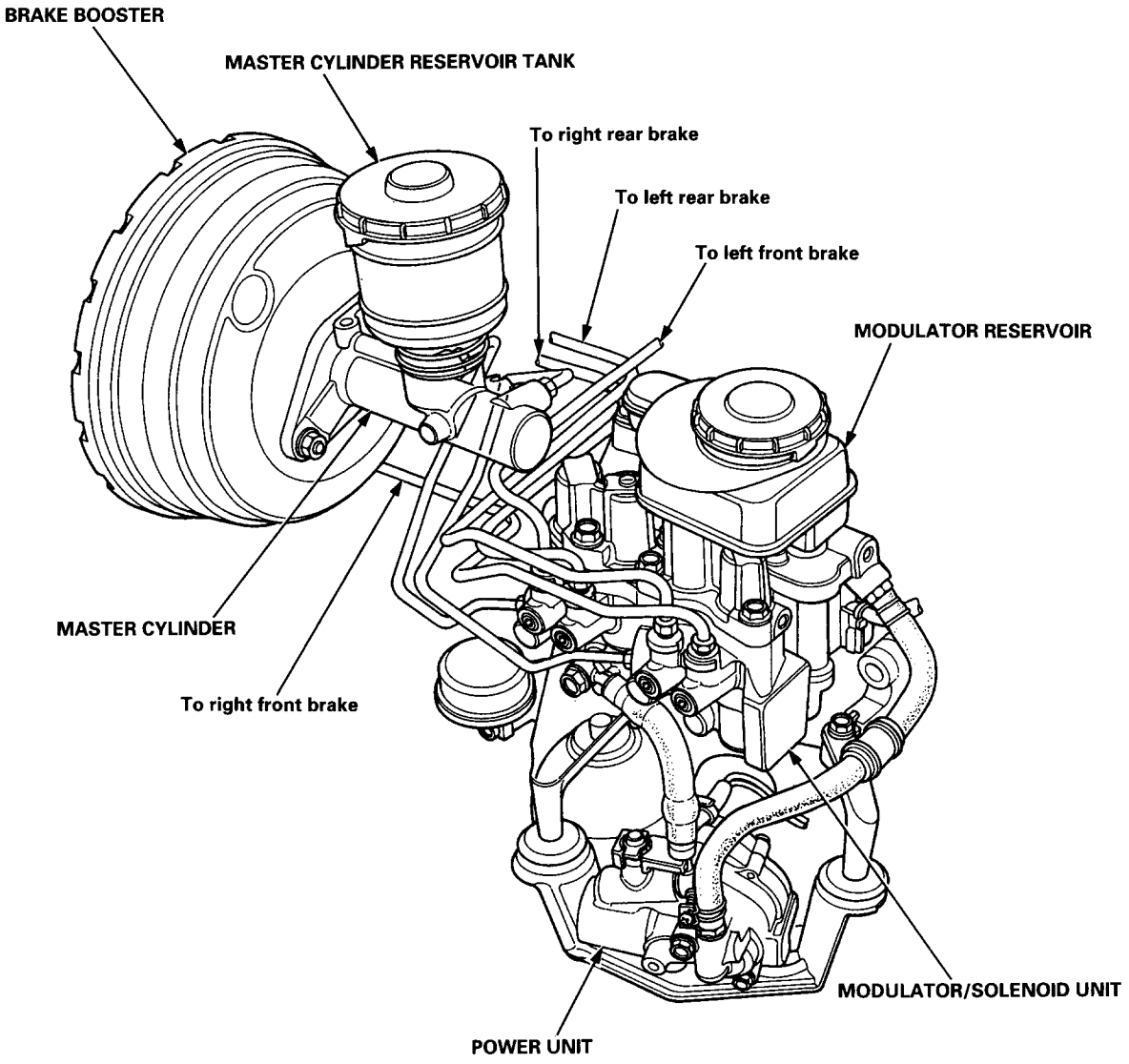

Relieving Accumulator/Line Pressure

⚠ WARNING **Use the Bleeder T-wrench before disassembling the parts shaded in the illustration.**

1. Drain the brake fluid from the master cylinder and modulator reservoir thoroughly.
2. Remove the red cap from the bleeder on the top of the power unit.
3. Install the special tool on the bleeder screw, and turn it out slowly 90° to collect high-pressure fluid into reservoir. Turn the special tool out one complete turn to drain the brake fluid thoroughly.
4. Retighten the bleeder screw and discard the fluid.
5. Reinstall the red cap.

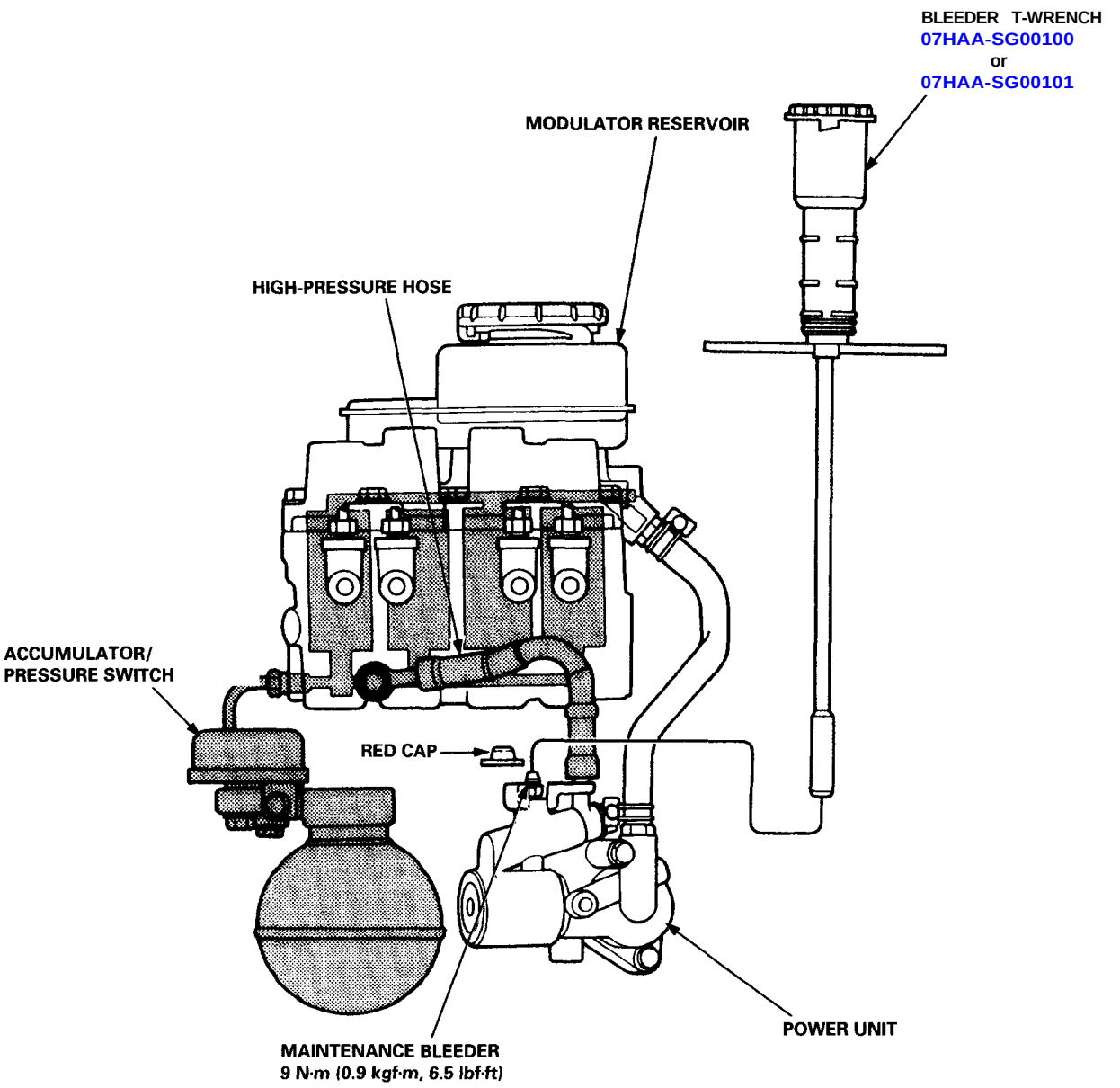

Modulator/Solenoid Unit

Index/Torque

CAUTION:

- **Do not damage the brake lines when removing the spare tire and modulator/solenoid unit.**
- **Do not spill brake fluid on the vehicle; it may damage the paint; if brake fluid does contact the paint, wash it off immediately with water.**

☆: CORROSION RESISTANT BOLT

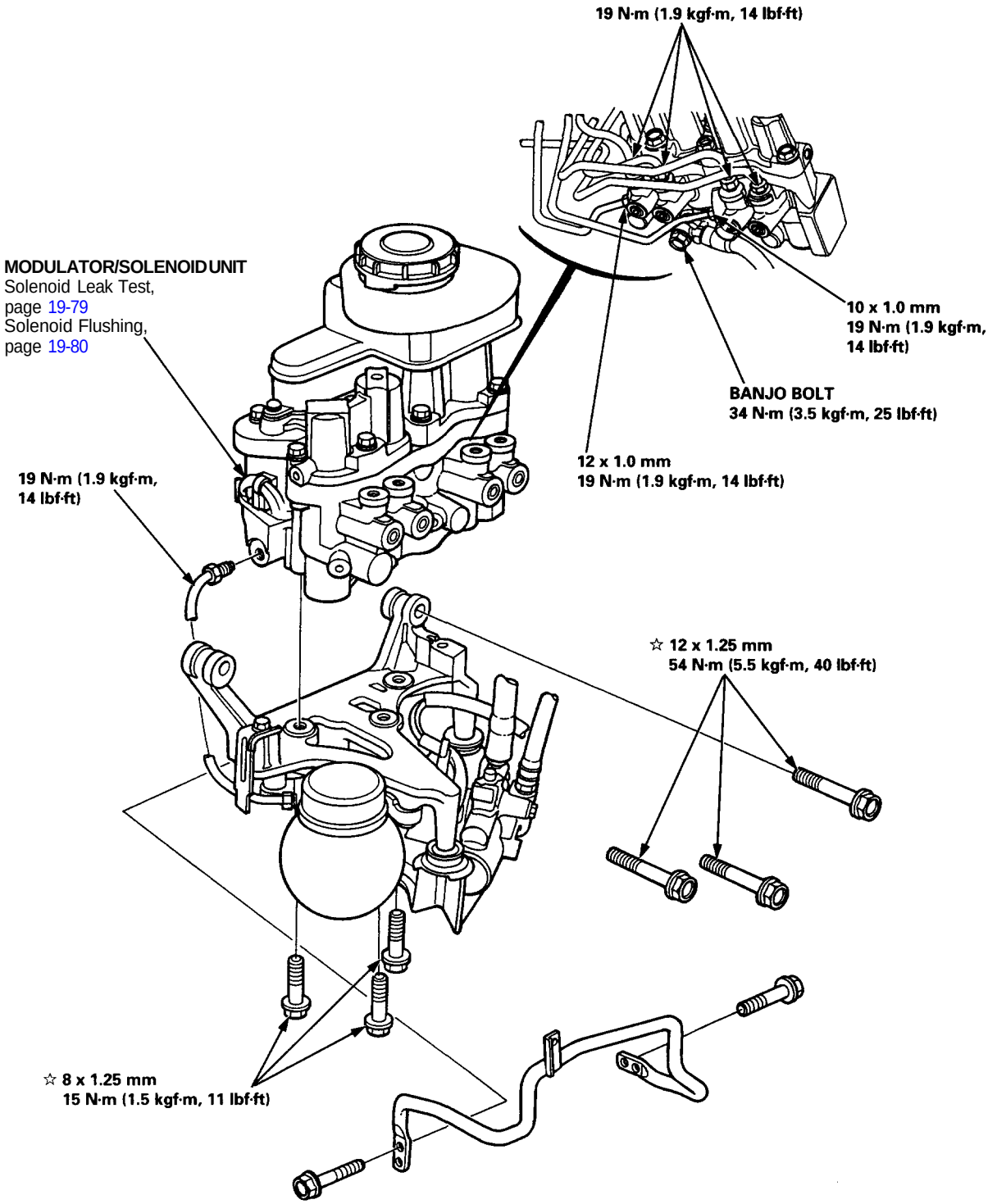

Solenoid Leak Test

1. Disconnect the 6P inspection connector (PNK) from the connector cover located under the glove box, and connect the 6P inspection connector to the ALB checker.

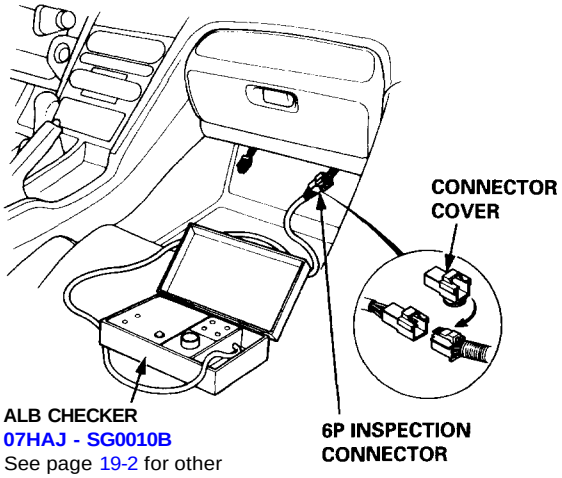

CAUTION: Place the vehicle on level ground with the wheels blocked. Put the transmission in neutral for manual transmission models, or in [P] for automatic transmission models.

2. Remove the modulator reservoir filter, then **fill** the modulator reservoir to the MAX level line.

   NOTE: Do not reuse aerated brake fluid that has been bled from the power unit.

3. Bleed high-pressure fluid from the maintenance bleeder with the special tool.

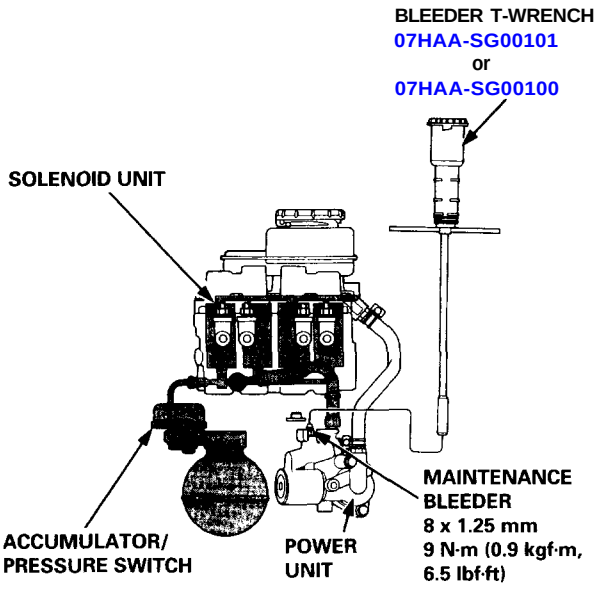

4. Start the engine and release the parking brake.

5. Turn the Mode Selector to 1, and press the Start Test button.

6 While the pump is running, place your finger over the top of the solenoid return tube in the modulator reservoir.

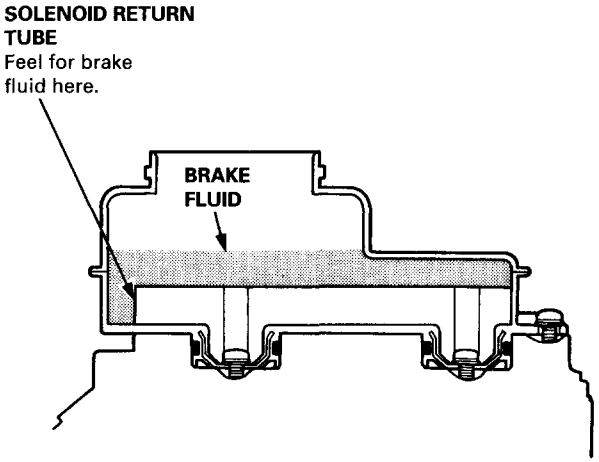

- If you can feel brake fluid coming from the return tube, one of the solenoids is leaking. Go to step 7.
- If you can't feel brake fluid coming from the return tube, the solenoids are OK.
  Reinstall the modulator reservoir filter and refill the reservoir to the MAX level line.

7. Bleed high-pressure fluid from the maintenance bleeder with the special tool.

8. Repeat steps 5 through 7 at modes 2 to 5 with the ALB checker.
   - If the solenoid leakage has stopped, reinstall the modulator reservoir filter and refill the reservoir to the MAX level line.
   - If you can feel brake fluid coming from the return tube, one of the solenoids is leaking. Go to Solenoid Flushing.

Modulator/Solenoid Unit

Solenoid Flushing

1. Remove the motor relay from the under-hood fuse/relay box. (Location: see page 19-38)

2. Install the special tool into the two motor relay cavities in the relay box.

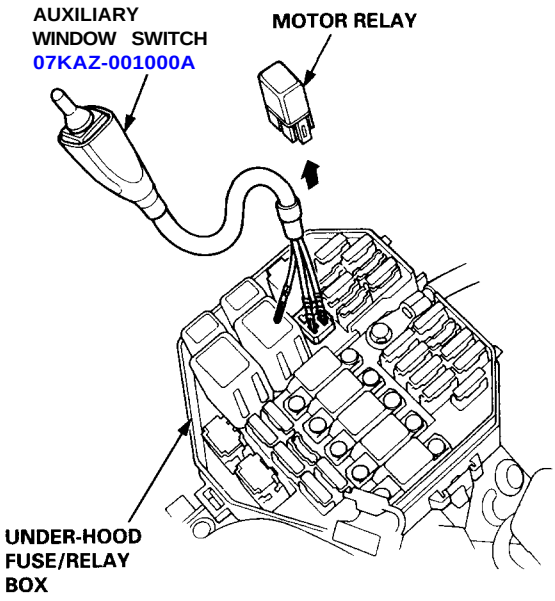

3. Disconnect the four modulator solenoid connectors.

4. Bleed any high-pressure fluid from the maintenance bleeder with the special tool, then retighten the bleeder.

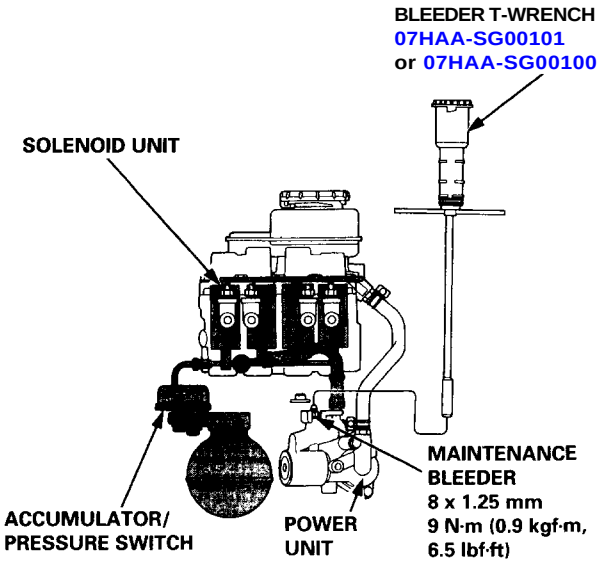

5. Connect the RED terminal from one solenoid connector to the battery positive (+) terminal with a remote starter switch. Connect the BLK terminal from the same solenoid to the battery negative (-) terminal with a jumper lead as shown.

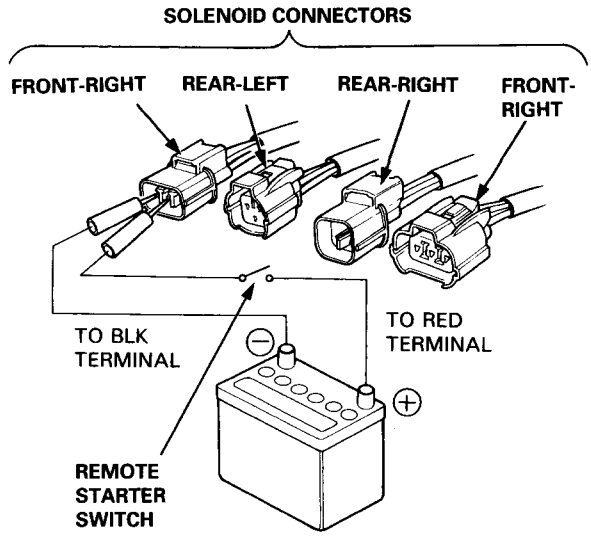

6. Press the auxiliary window switch to run the pump. After the pump has run for about five seconds, press and release the remote starter switch three or four times to open and close the solenoid. Continue running the pump for about 30 seconds, then release the auxiliary window switch and open and close the solenoid another three or four times.

7. Repeat steps 4-6 for the other three solenoids.

8. Reconnect the solenoids and the pump relay.

9. Connect the ALB Checker and turn the Mode Selector to "1". Start the engine and release the parking brake. Push the Start Test button on the ALB Checker.

10. While the pump is running, place your finger over the top of the solenoid return tube in the modulator reservoir and check for leaks.

    If a solenoid is still leaking, replace the modulator/solenoid unit.

Power Unit

Torque/Inspection

CAUTION:

- **Do not attempt to disassemble the power unit except for those components shown in this illustration.**
- **Do not spill brake fluid on the vehicle; it may damage the paint; if brake fluid does contact the paint, wash it off immediately with water.**
- **To prevent spills, cover the hose joints with rags or shop towels.**
- **Clean all parts in brake fluid and air dry; blow out all passages with compressed air.**
- **Before reassembling, check that all parts are free of dust and other foreign particles.**
- **Replace parts with new ones whenever specified to do so.**
- **Make sure no dirt or other foreign matter is allowed to contaminate the brake fluid,**
- **Do not reuse the drained fluid.**

Always use Genuine Honda DOT 3 Brake Fluid. Using a non-Honda brake fluid can cause corrosion and decrease the life of the system.

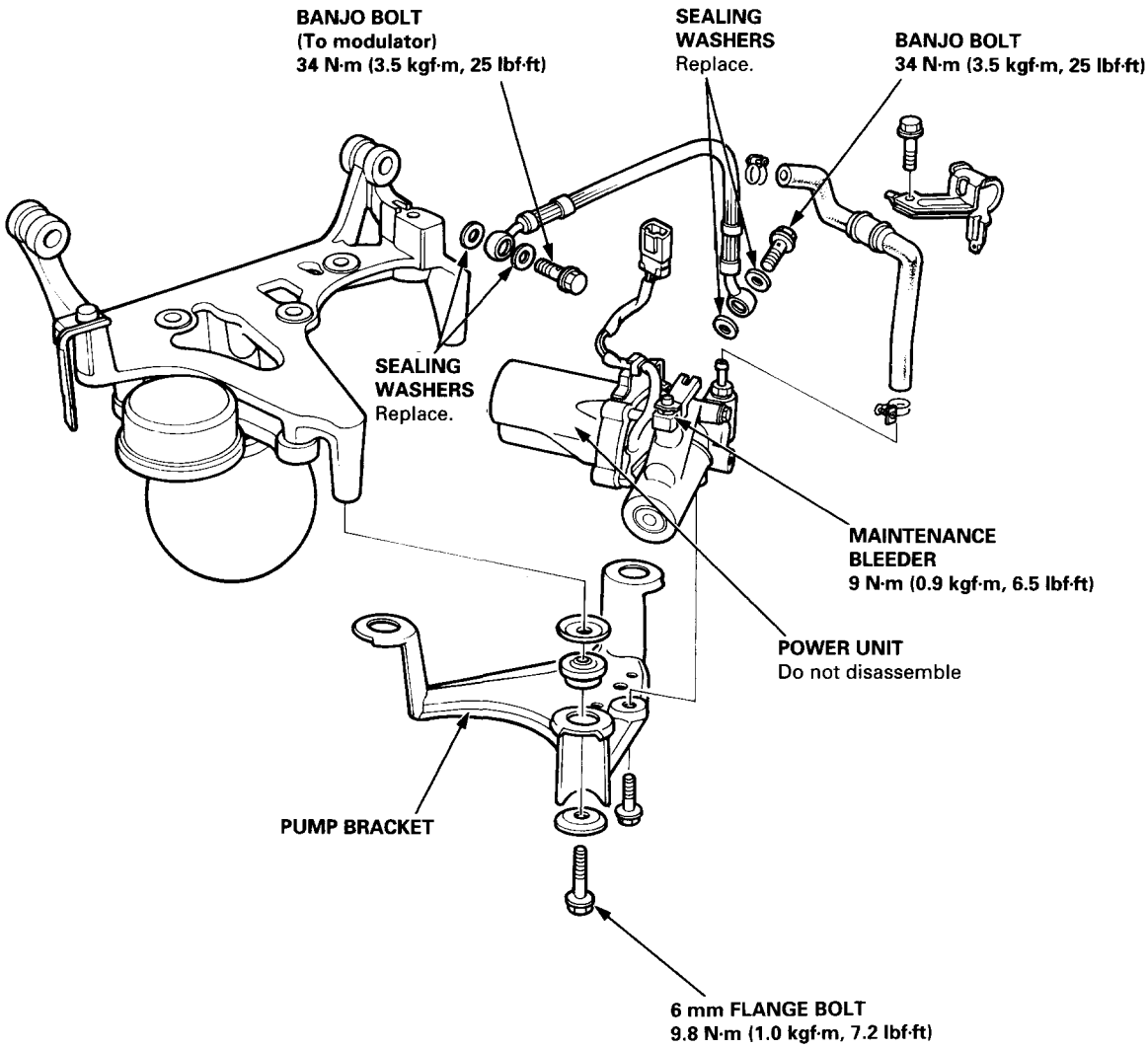

Accumulator/Pressure Switch

Index/Torque

CAUTION:

- Do not spill brake fluid on the vehicle; it may damage the paint; if brake fluid does contact the paint, wash it off immediately with water.
- To prevent spills, cover the hose joints with rags or shop towels.
- Clean all parts in brake fluid and air dry; blow out all passages with compressed air.
- Before reassembling, check that all parts are free of dust and other foreign particles.
- Replace parts with new ones whenever specified to do so.
- Before disassembling the accumulator unit, bleed the high-pressure brake fluid out from the system using the Bleeder T-wrench (see page 19-77).
- Make sure no dirt or other foreign matter is allowed to contaminate the brake fluid,
- Do not reuse the drained fluid.

Always use Genuine Honda DOT 3 Brake Fluid. Using a non-Honda brake fluid can cause corrosion and decrease the life of the system,

NOTE: Replace the O-ring with a new one before reassembly.

⚠ WARNING The accumulator contains high-pressure nitrogen gas; do not puncture, expose to flame, or attempt to disassemble the accumulator or it may explode; severe personal injury may result.

☆: CORROSION RESISTANT BOLT

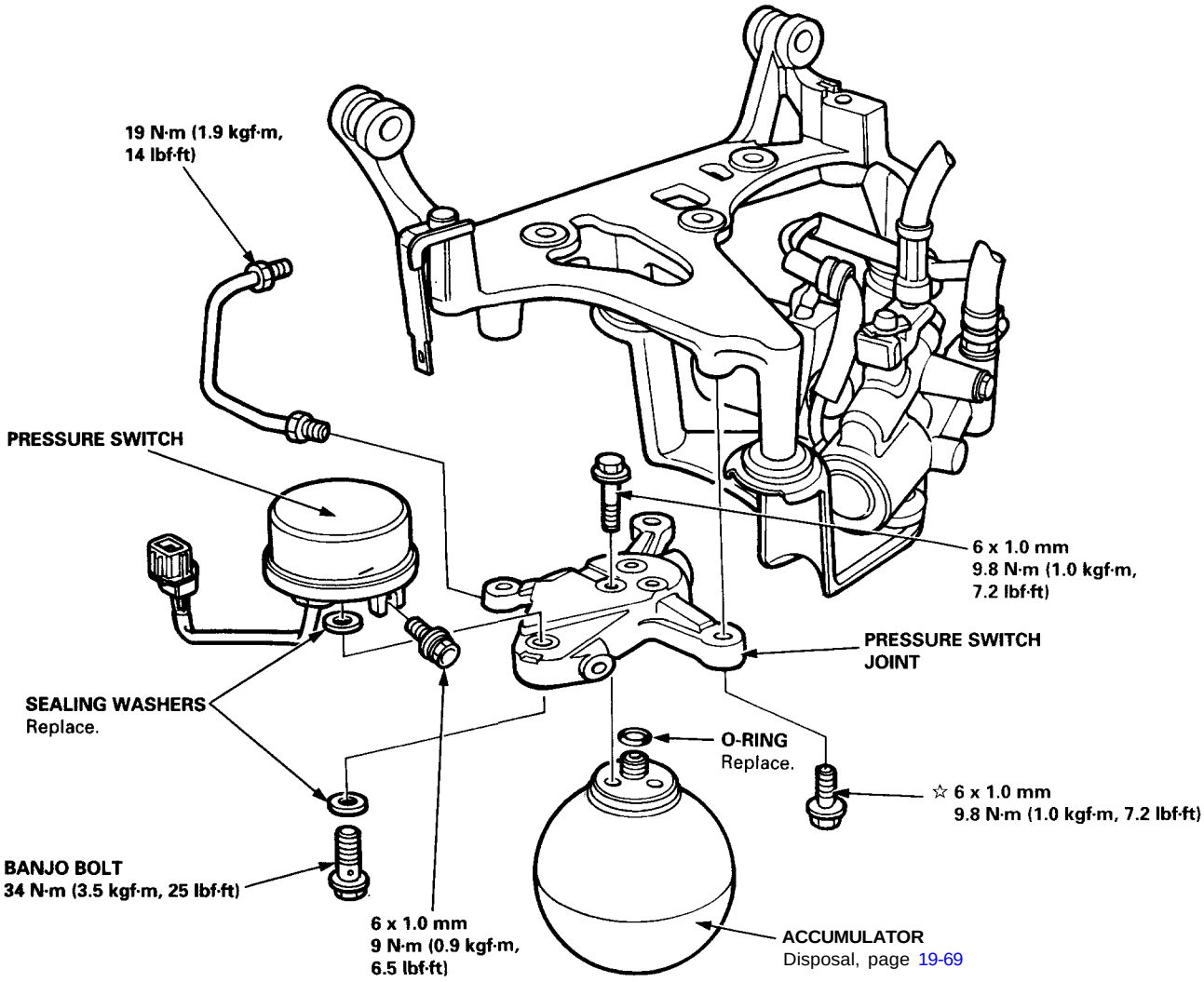

Accumulator/Pressure Switch Removal

1. Drain the high pressure brake fluid from the power unit (see page 19-77).

2. Remove three 6 mm flange bolts, then remove the accumulator from the pressure switch joint.

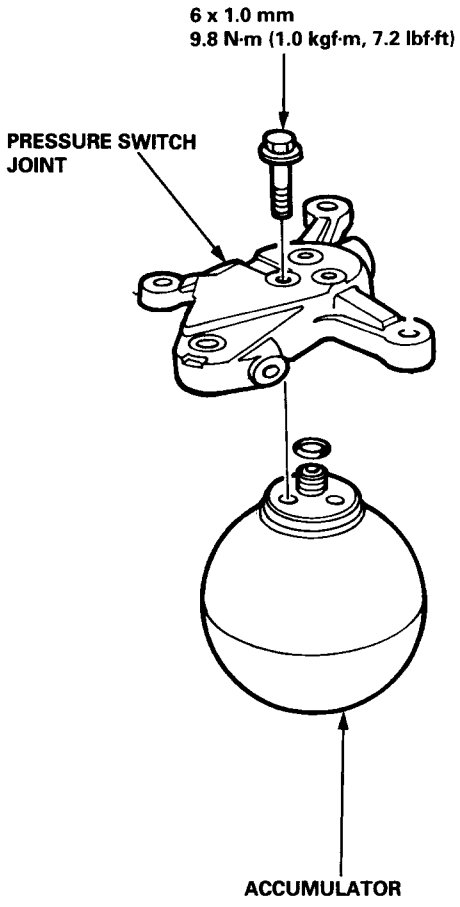

Accumulator Disposal

⚠ WARNING The accumulator contains high-pressure nitrogen gas; do not puncture, expose to flame, or attempt to disassemble the accumulator or it may explode; severe personal injury may result.

1. Secure the accumulator in a vise so that the relief plug points straight up.

2. Slowly turn the plug 3-1/2 turns, then wait 3 minutes for all pressure to escape.

3. Remove the plug completely, and dispose of the accumulator unit.

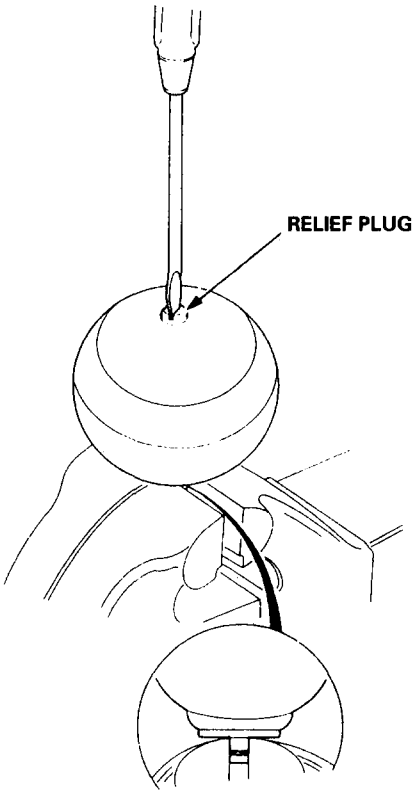

Bleeding

Air Bleeding with ALB Checker

CAUTION:

- **Do not spill brake fluid on the vehicle; it may damage the paint; if brake fluid does contact the paint, wash it off immediately with water.**
- **Make sure no dirt or other foreign matter is allowed to contaminate the brake fluid.**
- **Do not reuse the drained fluid.**

1. Place the vehicle on level ground with the wheels blocked. Put the transmission in neutral for manual transmission models, and in P position for automatic transmission models. Release the parking brake.

2. Disconnect the ABS inspection connector (6P) from the cross-member under the passenger's seat and connect the ABS inspection connector (6P) to the ALB checker.

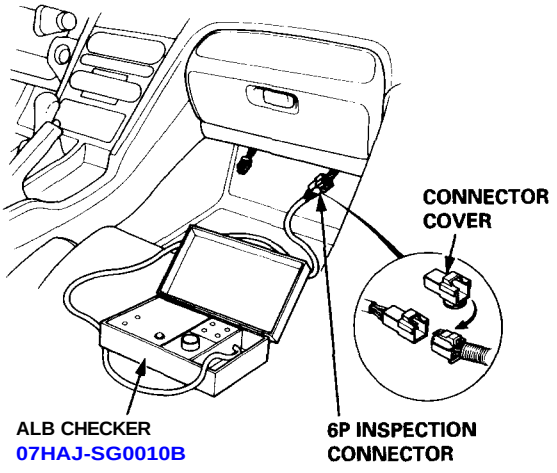

3. Fill the modulator reservoir to the MAX level line and install the reservoir cap.

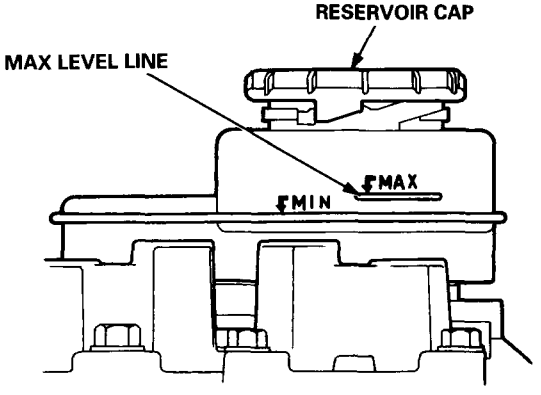

4. Start the engine and allow it to idle for a few minutes, then stop it. Check the fluid level in the modulator reservoir and refill to the MAX level line if necessary.

5. Bleed high-pressure fluid from the maintenance bleeder with the special tool.

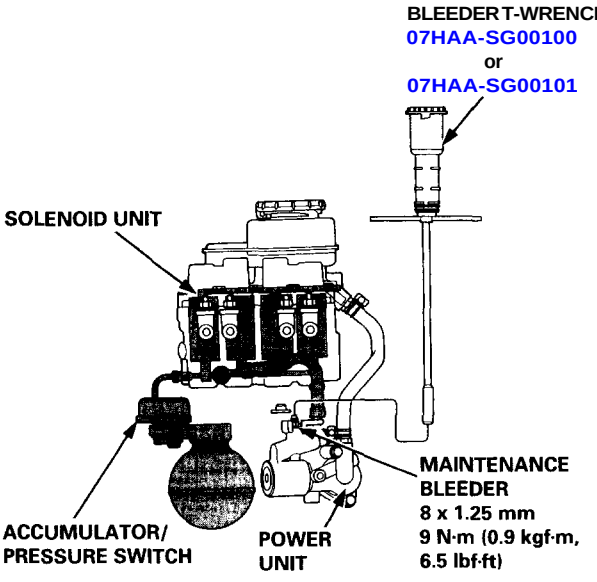

6. Start the engine and allow it to idle for a few minutes, then stop it. Check the fluid level in the modulator reservoir and refill to the MAX level line if necessary.

7. Turn the Mode Selector switch of the checker to 2.

8. While depressing the brake pedal firmly, push the Start Test switch to operate the modulator. There should be kickback on the brake pedal. If not, repeat steps 5 to 8.

   NOTE: Continue to depress the brake pedal firmly when operating the checker.

9. Turn the Mode Selector to 3, 4 and 5, and repeat step 8 in each mode.

10. Refill the modulator reservoir to the MAX level line and install the reservoir cap.

⚠ WARNING Disconnect the ALB Checker before driving the car. A collision can result from a reduction or complete loss of braking ability, causing severe personal injury or death.

ABS Control Unit Replacement

SRS components are located in this area. Review the SRS component locations, precautions, and procedures in the SRS section 24 before performing repairs or service.

1. Remove the dashboard lower cover and glove box, and disconnect the light connector.

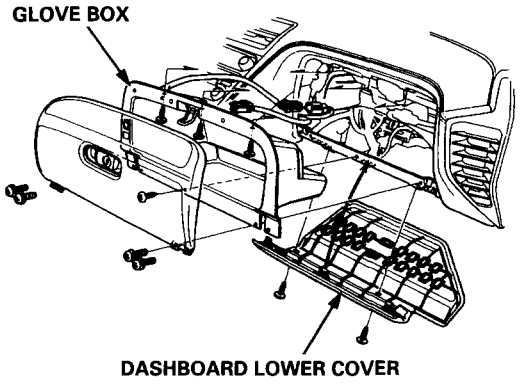

2. Move the heater duct to the right and remove it.

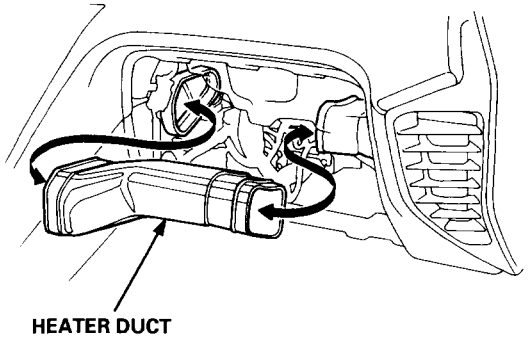

3. Disconnect the connectors from the ABS control unit by removing the wire harness band.

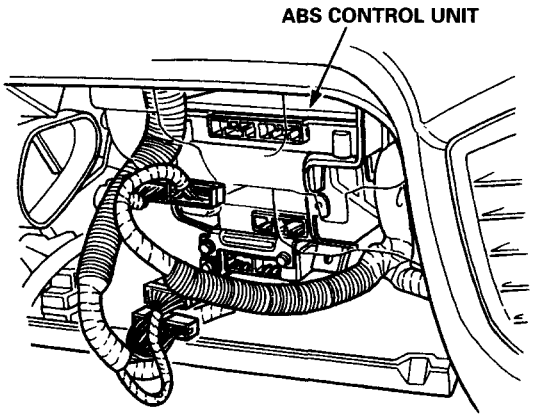

4. Remove the four control unit attaching bolts, then remove the bracket with the control unit.

5. Remove the ABS control unit from the bracket.

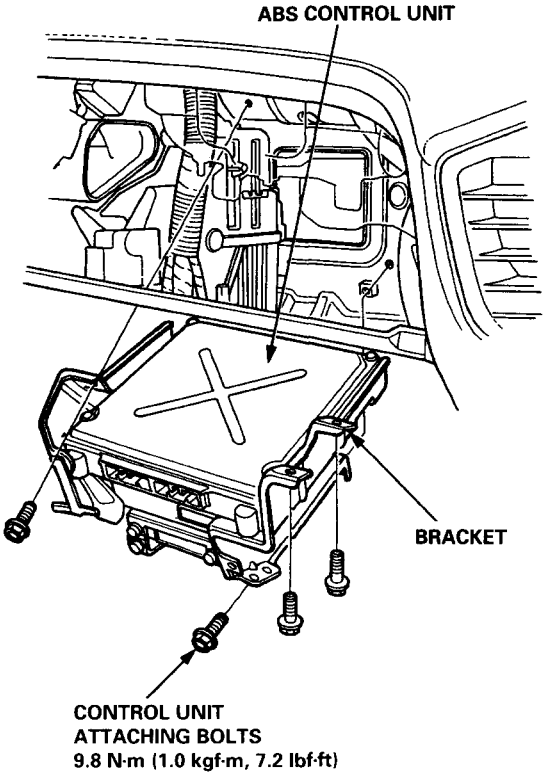

6. Installation is the reverse of removal procedure.

NOTE: After installation, start the engine and make sure that the ABS indicator light goes off.

Electronic Components

Relay Inspection

1. Check for continuity between terminals ③ and ④. There should be no continuity.
2. Connect a 12 V battery across terminals ① and ②. There should be continuity between terminals ③ and ④.

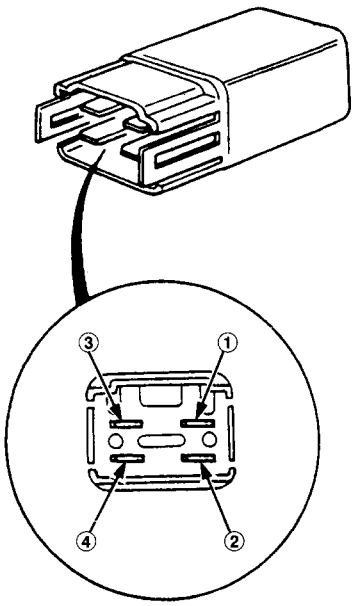

Pulsers/Sensors

Inspection

1. Check the pulser for chipped or damaged teeth.
2. Measure air gap between the sensor and pulser all the way around while rotating the driveshaft by hand.

   (A) - (B) = Standard: 0.4 - 1.0 mm (0.02 - 0.04 in)

   NOTE: If the gap exceeds 1.0 mm (0.04 in), the probability is a distorted knuckle which should be replaced.

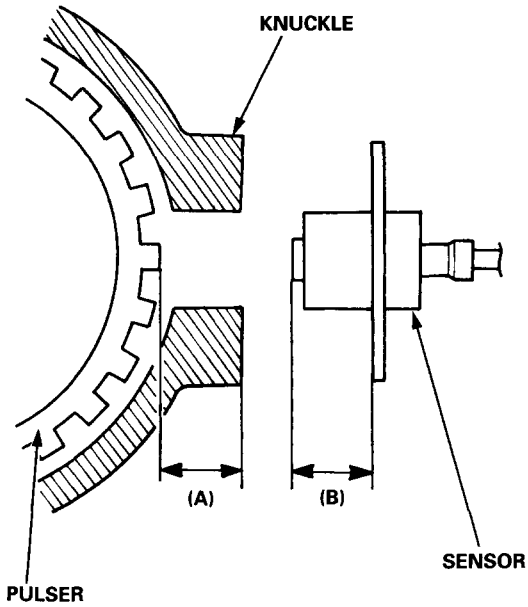

Front Sensor Replacement

NOTE:
- Be careful when installing the sensors to avoid twisting the wires.
- After sensor replacement confirm proper operation (see page 19-62).

☆: CORROSION RESISTANT BOLT

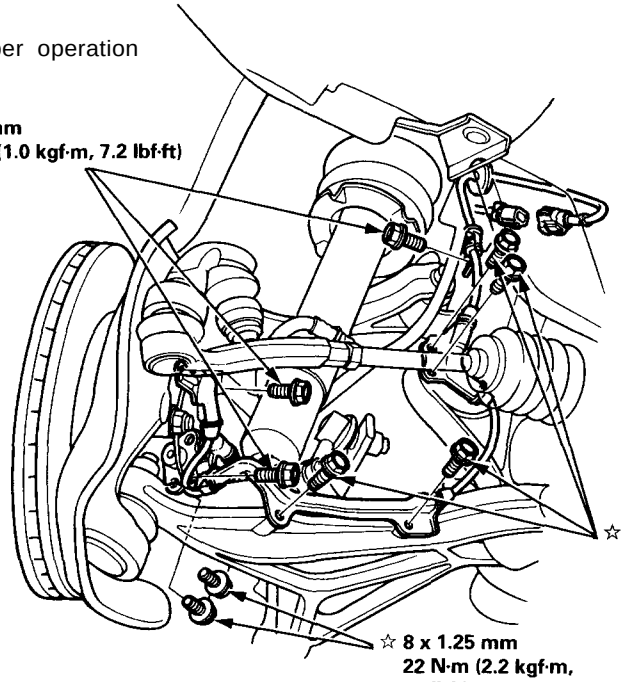

Rear Sensor Replacement

NOTE:
- Be careful when installing the sensors to avoid twisting the wires.
- After sensor replacement, confirm proper operation (see page 19-62).

☆: CORROSION RESISTANT BOLT

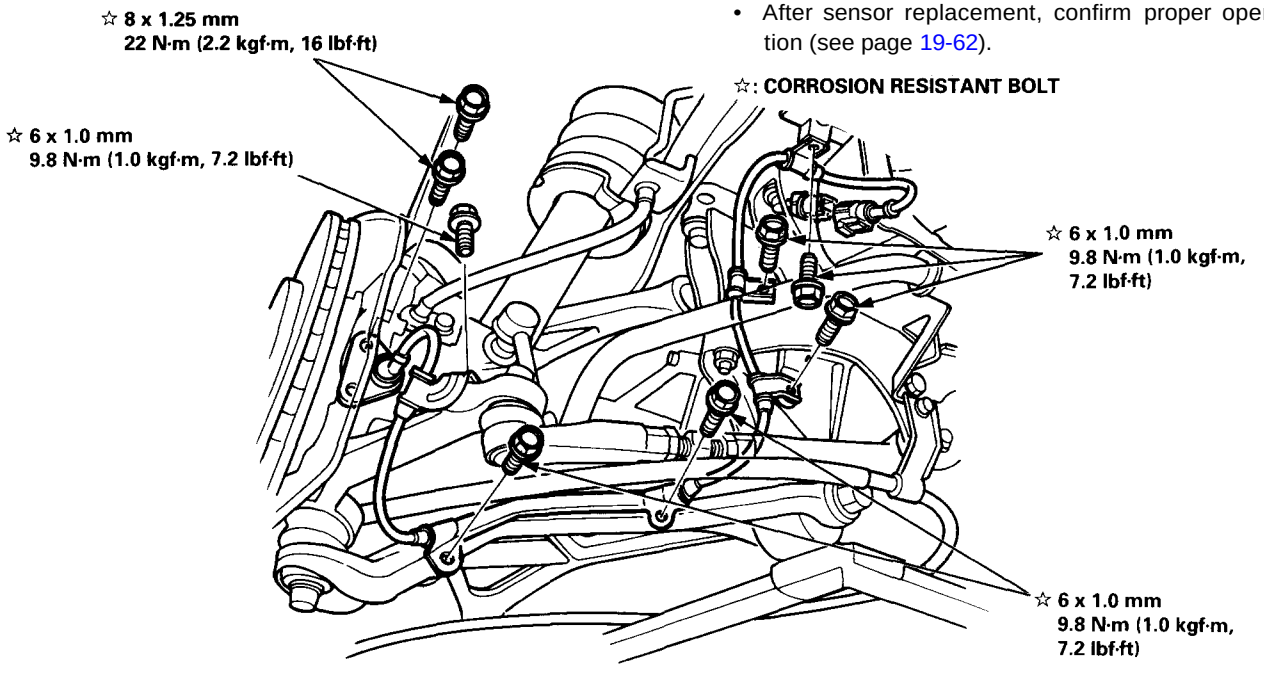

Special Tools

Ref. No.	Tool Number	Description	Qty	Page Reference
①	07PAZ – 0010100	SCS Service Connector	1	19-100

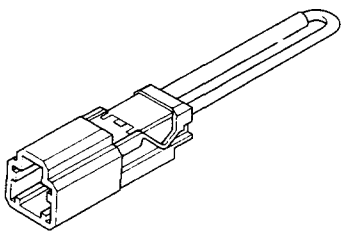

①

Component Locations

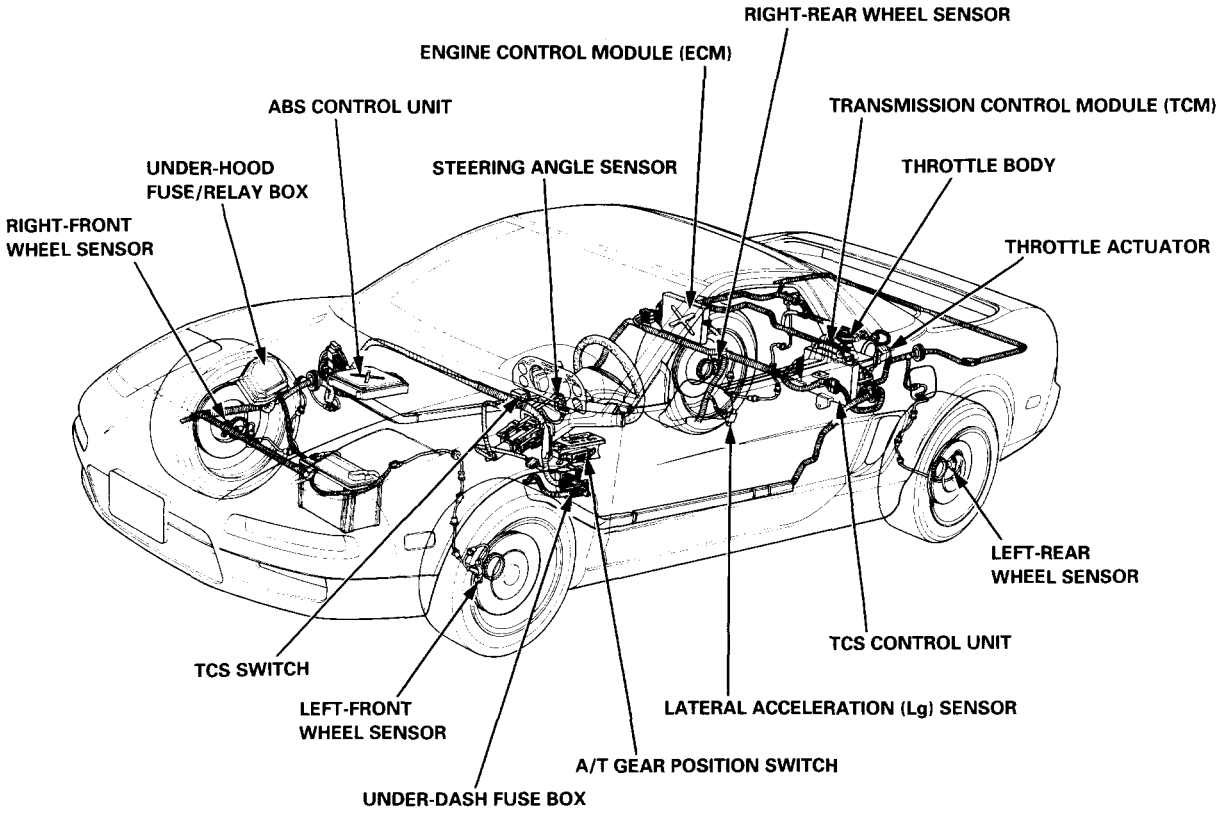

GAUGE ASSEMBLY

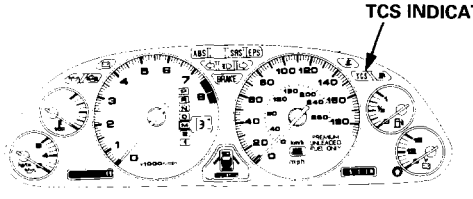

UNDER-HOOD FUSE/RELAY BOX

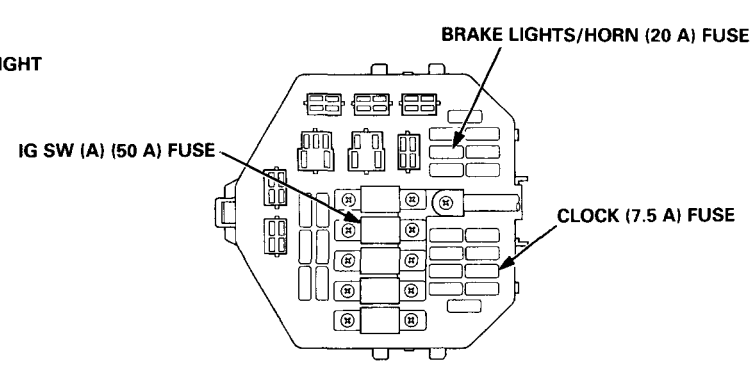

UNDER-DASH FUSE BOX

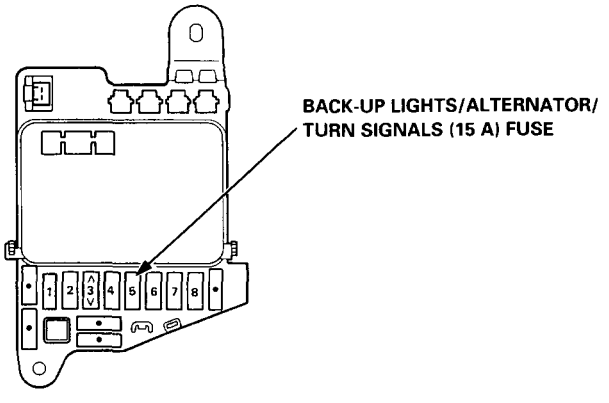

System Description

Outline

Role of System

The NSX/NSX-T traction control is a variable system designed to enhance traction during acceleration and cornering. It does so by determining the optimum amount of wheel spin for any given driving situation, then suppressing surplus engine power accordingly.

This version of TCS has a lateral acceleration (Lg) sensor and a deceleration control function to improve traction control during acceleration and deceleration while cornering. When downshifting quickly to a very low gear on a slippery surface, the driving wheels tend to slip because of engine braking, resulting in lower directional stability. To counteract this, the deceleration control function controls engine braking with the TCS control unit.

Construction and Function

The TCS control unit gets signals about the vehicle's speed, direction, and road conditions from sensors at the wheels and the steering column. Based on these signals, the control unit will determine the optimum amount of wheel spin. Because the system is variable, the control unit may determine, depending on the driving conditions, that some wheel spin is beneficial (thus enhancing straight-line acceleration), or that no wheel spin is beneficial (thus enhancing cornering). For any given driving situation, the control unit will determine the amount of wheel spin best suited to the driver's needs and, if necessary, will then signal the throttle actuator and Engine Control Module (ECM) to reduce engine power.

The system is automatically "ready" whenever the engine is started, but can be manually canceled with the TCS switch. However, once activated, the system cannot be canceled until it is once again in the ready state.

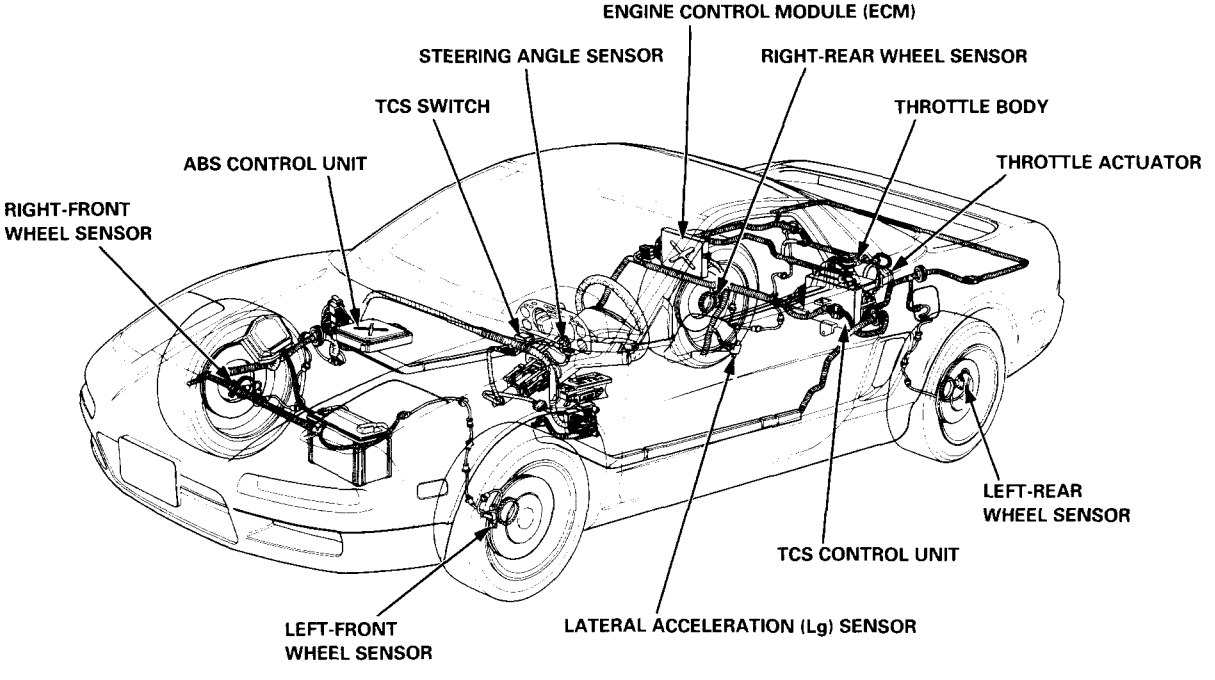

Components:

- Wheel sensors: The TCS "shares" the wheel sensors with the ABS. The wheel sensors transmit wheel speed signals to the TCS through the ABS control unit.
- Steering angle sensor: The steering angle sensor signals the TCS control unit about the amount of steering angle.
- Lateral acceleration (Lg) sensor: The Lg sensor detects the lateral acceleration of the vehicle and signals the TCS control unit.
- TCS control unit: The TCS control unit detects the driving condition signals from the sensors and, if necessary, signals the throttle actuator and the Engine Control Module (ECM). This version has a lateral acceleration (Lg) sensor, which improves the traction control performance during cornering.
- Throttle actuator: The throttle actuator opens and closes the throttle valve according to the traction control signal from the Engine Control Module (ECM).

Construction and Function

TCS Control unit

AccelerationControl

When the drive wheel speed exceeds the vehicle speed by a given amount, the TCS control unit judges that the drive wheels are slipping, and it outputs the traction control signal to reduce engine power.

Deceleration Control

When the drive wheel speed drops below the vehicle speed by a given amount, the TCS control unit judges that the drive wheels are slipping, and it outputs the traction control signal to control engine braking properly.

Handling Control

Based on signals about driving wheel and driven wheel rotational speeds, the control unit calculates the car's "yaw" rate (the turn rate of the car's body). Based on signals from the steering angle sensor, the control unit also calculates the yaw rate expected by the driver. If the difference between actual and expected yaw rates is substantial —that is, if the direction of the car's body will exceed the driver's expected line — the control unit signals the throttle actuator, which closes the throttle valve, thus reducing engine power and maintaining the expected line.

Rough Road Control

Based on signals from the wheel sensors, the control unit detects a rough road based on frequency of wheel rotational vibration. The control unit then signals the throttle actuator to relax engine power, thus improving acceleration efficiency.

Grip Control

Based on signals about wheel speed and lateral acceleration, the control unit determines the efficiency of the grip of the tires on the road and signals the throttle actuator to relax engine power if necessary, thus improving grip.

Main Control Block

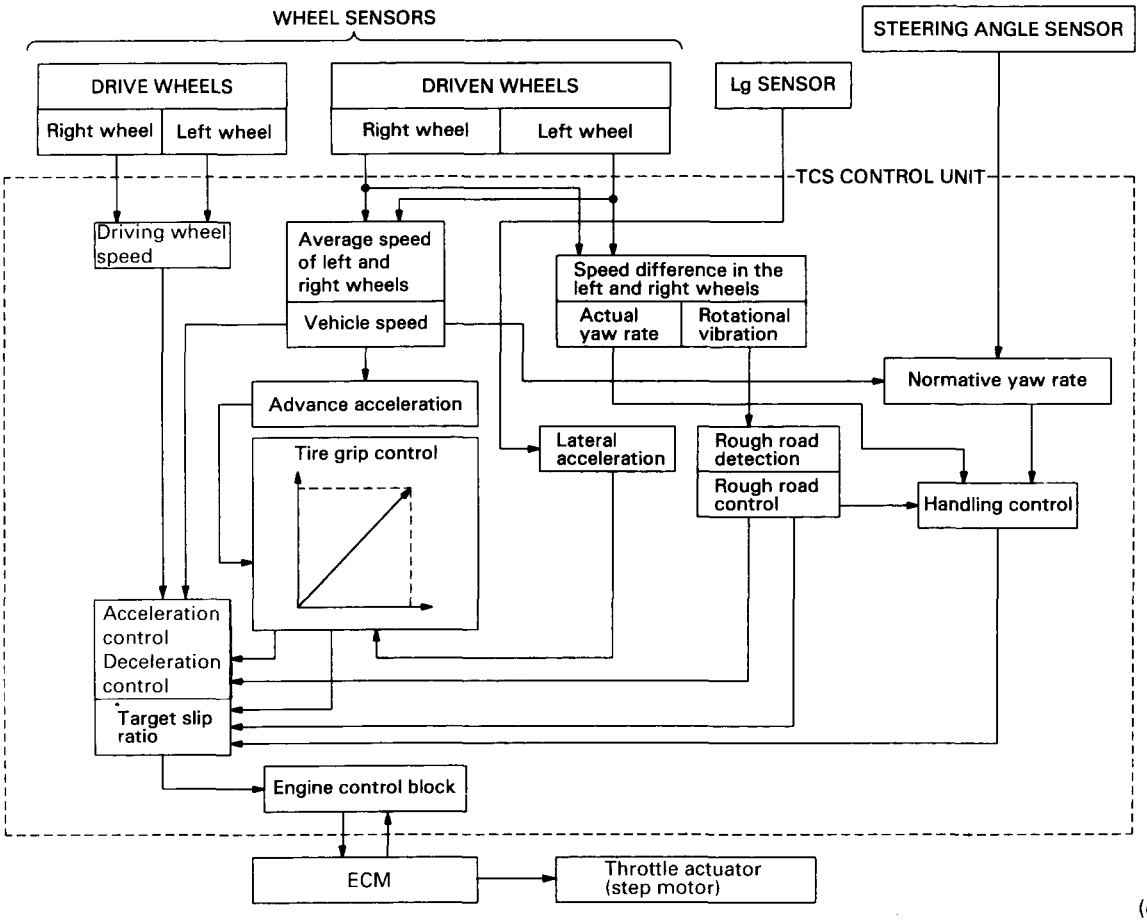

(cont'd)

System Description

Construction and Function (cont'd)

Fail-Safe Function

If the control unit detects an abnormality, it shuts the traction control system off and causes the TCS indicator light to come on. However if the abnormality is detected while the TCS is activated, the control unit first establishes the appropriate wheel spin velocity, then shuts the system down, thus preventing excessive wheel spin.

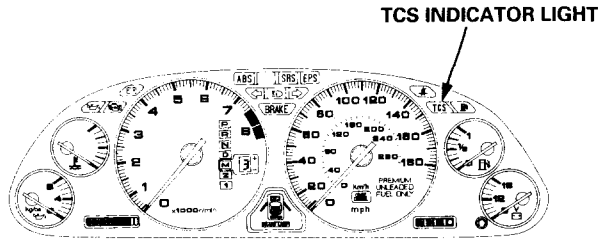

Self-Diagnosis Function

If the control unit detects an abnormality, it records a Diagnostic Trouble Code (DTC) which can be used to diagnose the problem. The DTC is shown at the TCS indicator light when the Service Check connector terminals are connected with the SCS service connector.

Steering Angle Detection

Steering angle is detected by the steering angle sensor, located on the steering column. The sensor uses two magneto-resistor (MR) elements to determine steering angle and direction of rotation. When the driver turns the steering wheel, a magnet in the steering shaft generates waves in the "MR" elements. These waves are amplified and converted into signals which the control unit can interpret as angle and direction of turn.

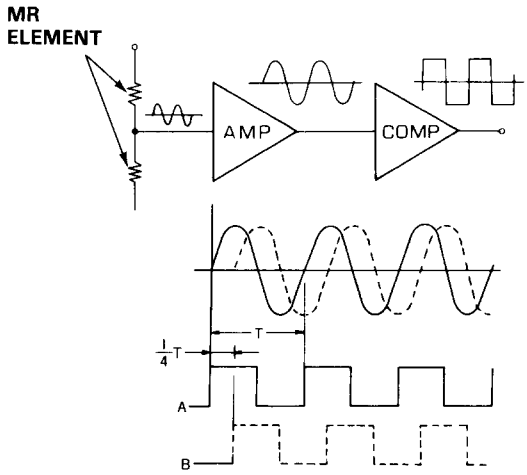

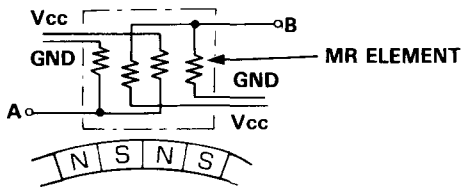

Vehicle Speed Detection

Wheel rotation speed is detected by the wheel sensors, located at each wheel. The signals are sent to the control unit, which compares each wheel's speed and determines whether traction control is required.

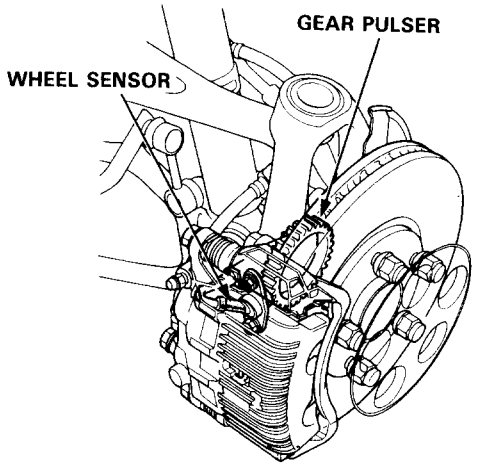

Lateral Acceleration Detection

Lateral acceleration is detected by the lateral acceleration (Lg) sensor located under the rear center trim panel. The Lg sensor varies the output voltage in accordance with the left or right side acceleration and sends it to the TCS control unit as a lateral acceleration signal.

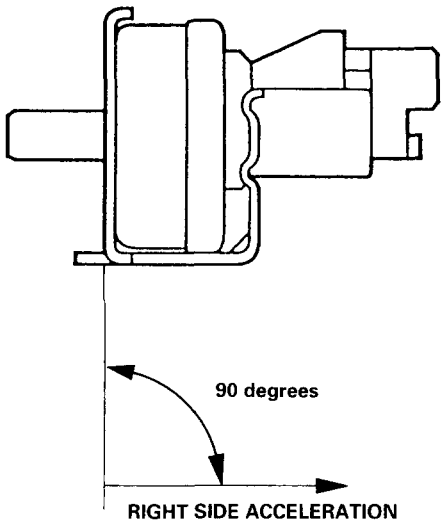

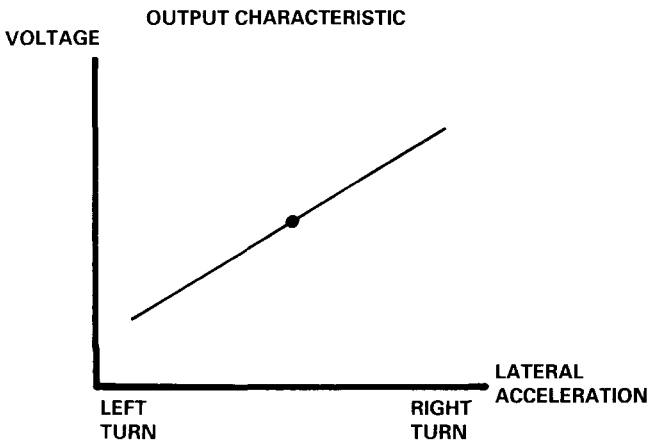

TCS Control Unit Terminal Arrangement

TCS CONTROL UNIT 14P CONNECTOR

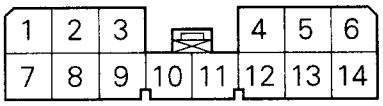

WIRE SIDE OF FEMALE TERMINALS

14P CONNECTOR

Terminal number	Wire color	Terminal sign (Terminal name)	Description	Voltage		
				Measurement terminals	Conditions (Ignition Switch ON (II))	Output voltage
1	ORN/RED	FRP (Front right pulse)	Detects right-front wheel sensor signal from the ABS control unit.	1-GND	Raise the car off the ground and rotate the right-front wheel.	0 V ↔ 5 V
2	WHT	GSEN VCC (Lg sensor power supply)	Power source for Lg sensor.	2-GND		5 V
3	ORN/BLK	FLP (Front left pulse)	Detects left-front wheel sensor signal from the ABS control unit.	3-GND	Raise the car off the ground and rotate the left-front wheel.	0 V ↔ 5 V
4	BLU/ORN	RRP (Rear right pulse)	Detects right-rear wheel sensor signal from the ABS control unit.	4-GND	Raise the car off the ground and rotate the right-rear wheel.	0 V ↔ 5 V
5	YEL/RED	STR VCC (Steering angle sensor power supply)	Power source for steering angle sensor.	5-GND		5 V
6	GRY/WHT	RLP (Rear left pulse)	Detects left-rear wheel sensor signal from the ABS control unit.	6-GND	Raise the car off the ground and rotate the left-rear wheel.	0 V ↔ 5 V
7	YEL/BLK	WARN1 (Warning lamp)	Drives TCS indicator light (Shuts off the indicator light ground circuit inside the TCS control unit to turn off the light when the system is normal).	7-GND	Indicator light ON	Below 0.6 V
					Indicator light OFF	Battery voltage
8	LT GRN/RED	STR B (Steering angle sensor signal B)	Detects steering angle sensor signal B.	8-GND	Rotate the steering wheel.	5 V ↔ 0 V
9	RED	PNSW (Parking/neutral shift position signal)	Detects shift position signal in [P] and [N] position. (Manual transmission: no connection)	9-GND	Shift the transmission to [P] or [N] position.	0 V
					Shift the transmission to except [P] or [N] position.	10 V
10	GRN/WHT	STOP (Brake switch signal)	Detects brake switch signal.	10-GND	Brake pedal depressed.	Battery voltage
					Brake pedal released.	0 V
11	YEL/GRN	TCSW (TCS switch signal)	Detects TCS switch signal.	11-GND	Push the TCS switch.	Battery voltage
					Release the TCS switch.	0 V
12	BRN/BLK	LG1 (Logic ground)	Ground for the TCS control unit control circuits.	12-GND		Below 0.3 V
13	LT GRN/WHT	STR A (Steering angle sensor signal A)	Detects steering angle sensor signal A.	13-GND	Rotate the steering wheel.	5 V ↔ 0 V
14	YEL	IG1 (Ignition switch)	Detects ignition switch IG1 signal.	14-GND		Battery voltage

TCS CONTROL UNIT 20P CONNECTOR

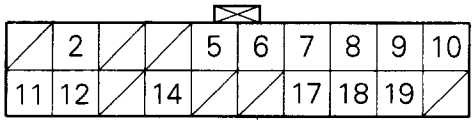

WIRE SIDE OF FEMALE TERMINALS

20P CONNECTOR

Terminal number	Wire color	Terminal sign (Terminal name)	Description	Voltage		
				Measurement terminals	Conditions (Ignition Switch ON (II))	Output voltage
2	GRN/RED	PARK (Parking brake switch signal)	Detects parking brake switch signal.	2-GND	Pull the parking brake lever up.	Below 0.6 V
					Release the parking brake lever.	Battery voltage
5	BLK	SDL SELD (Serial data line shield)	FI serial data line shield.	5-GND	Check for continuity.	There is continuity
6	ORN/BLU	AT SHIFT (A/T shift position)	Detects A/T shift position signal.	6-GND	Shift the transmission to [P] position. Engine idling.	Approx. 4 V (5 V ↔ 0 V)
7	BLU	SCS (Service check signal)	Detects service check connector signal (diagnostic trouble code indication).	7-GND	SCS service connector connected.	0 V
					SCS service connector disconnected.	5 V
8	BLK	GSEN GND (Lg sensor ground)	Ground for the Lg sensor.	8-GND		Below 0.3 V
9	RED	GSEN SIG (Lg sensor signal)	Detects Lg sensor signal.	9-GND	Connector side facing down.	3.5 V
					Vertical	2.5 V
					Connector side facing up.	1.5 V
10	WHT/YEL	VB (Back-up voltage)	Power source for diagnostic trouble code memory.	10-GND	Battery voltage at all time.	Battery voltage
11	YEL/BLK	WARN2 (Warning lamp)	Drives TCS indicator light (Shuts off the indicator light ground circuit inside the TCS control unit to turn off the light when the system is normal).	11-GND	Indicator light ON	Below 0.6 V
					Indicator light OFF	Battery voltage
12	BRN/BLK	LG2 (Logic ground)	Ground for the TCS control unit control circuits.	12-GND		Below 0.3 V
14	RED/BLU	FI SDL (FI serial data line)	Serial data line to communicate with the ECM.	14-GND	Engine idling.	Approx. 3 V
17	GRN	NEP (Engine speed signal)	Detects engine speed signal.	17-GND	Engine idling.	Approx. 6 V (12 V ↔ 0 V)
18	BRN/WHT	STR GND (Steering angle sensor ground)	Ground for the steering angle sensor.	18-GND		Below 0.3 V
19	BLK	GSEN SELD (Lg sensor shield)	Lg sensor line shield.	19-GND	Check for continuity.	There is continuity.

TCS Indicator Light

Temporary Driving Conditions:

1. The TCS indicator light will come on and the control unit memorizes the Diagnostic Trouble Code (DTC) under certain temporary conditions:
   - The spare tire is installed, or a tire of the improper size is installed.
   - The tire pressures are not correct.
2. If the TCS indicator light does not come back on after correcting the tire or tire pressure problem, the TCS system is OK.
3. Remove the CLOCK (7.5 A) fuse for at least three seconds to clear the DTC from the TCS control unit memory.

   NOTE: Disconnecting the CLOCK fuse also cancels the radio preset stations and the clock setting. Make note of the radio presets before removing the fuse so you can reset them.

TCS Diagnostic Trouble Code (DTC) Indication:

1. Stop the engine.
2. Turn the ignition switch ON (II), and confirm that the TCS indicator light comes on.
3. Turn the ignition switch off.
4. Connect the SCS service connector to the service check connector located under the glove box.
5. Turn the ignition switch ON (II), but do not start the engine.
6. Record the blinking frequency of the TCS indicator light. The blinking frequency indicates the DTC. Long blinks indicate the main code: short blinks indicate the sub-code.
7. Refer to the Troubleshooting Guide (page 19-104) for repair information.

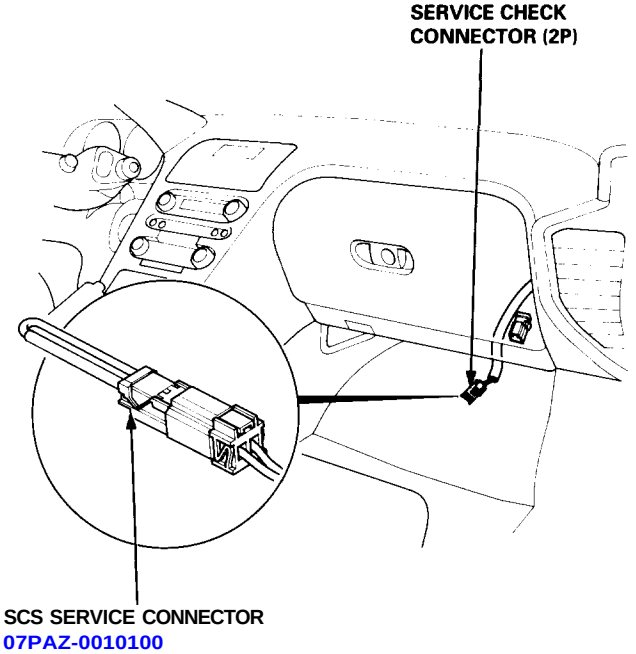

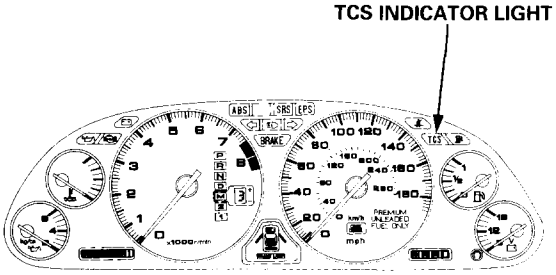

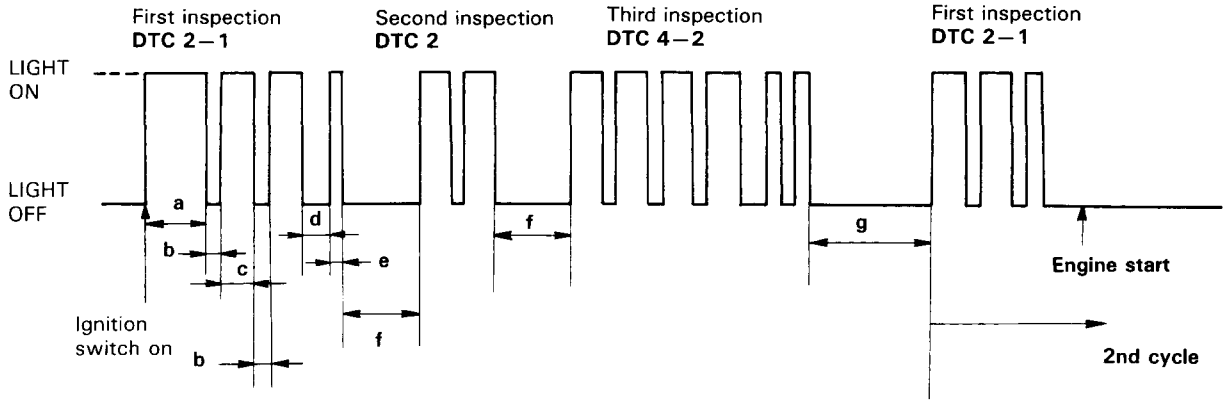

a: 2.0 sec. c: 1.2 sec. e: 0.3 sec. g: 3.8 sec.
b: 0.5 sec. d: 1.0 sec. f: 2.5 sec.

NOTE:

- The TCS control unit has three memory registers. When a problem occurs, the control unit stores the Diagnostic Trouble Code (DTC) in the first memory register. If another problem occurs, or the same problem occurs again, the control unit moves the first code to the next memory register and stores the second code in the first register. If there's a third problem occurrence, the two existing code are moved up one register and the third code is stored in the first register. If problems continue to occur, the oldest code is moved out of the last register and lost, and the most recent code is stored in the first register.
- The TCS indicator light will not come on again after the engine starts unless another problem occurence is detected. However, there will still be a code stored in the control unit's memory.
- After the repair is completed, disconnect the SCS service connector from the Service Check connector, and remove the CLOCK (7.5 A) fuse from the under-hood fuse/relay box for at least three seconds to erase the control unit's memory.
- The control unit's memory is erased if the connector is disconnected from the control unit or if the control unit is removed from the car.

Troubleshooting Guide

Diagnostic Trouble Code (DTC)	System Indicated	Related components										Refer to page
		CLOCK (7.5 A) fuse	BACK-UP LIGHTS (15 A) fuse	Parking brake switch	Lateral acceleration (Lg) sensor	Steering angle sensor	Engine Control Module (ECM)	ABS control unit	Transmission Control Module (TCM)	Wire harness	TCS control unit	
—	TCS indicator light does not come on when ignition switch is turned ON (II)		○							○	○	19-103
—	TCS indicator light does not go off after engine is started	○					○			○	○	19-105
1-2	TCS control unit										○	19-106
2	Parking brake			○						○	○	19-107
2-1	Steering angle sensor					○				○	○	19-110
2-3	Lateral acceleration (Lg) sensor				○					○	○	19-113
3-1	TCS serial data line (SDL)						○			○	○	19-116
3-2	Engine Speed Signal (NEP)						○		○	○	○	19-118
3-3	Incorrect engine control module (ECM) for a '97 model						○					—
4-1	Right-front wheel sensor											
4-2	Left-front wheel sensor							○		○	○	19-119
4-4	Right-rear wheel sensor											
4-8	Left-rear wheel sensor											
4-9	All wheel sensors							○		○	○	19-121
6-1	Transmission Control Module (TCM)								○	○	○	19-122

TCS Switch Inspection

Between terminal No. 4 and No. 5 (Illumination light circuit)

There should be continuity.

Between terminal No. 1 and No. 2 (Switch circuit)

There should be continuity when the switch is pushed, and there should be no continuity when the switch is released.

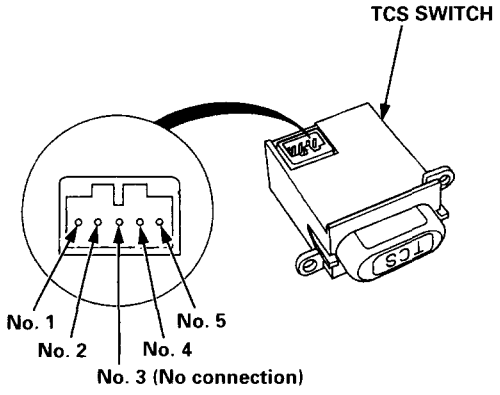

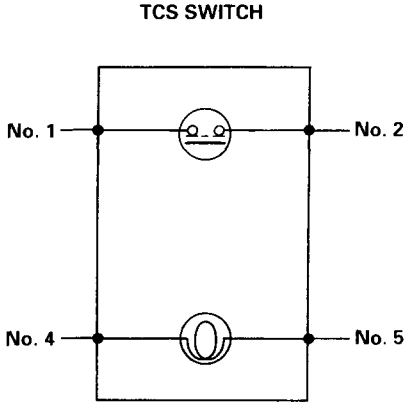

Lateral Acceleration (Lg) Sensor Inspection

CAUTION: Be careful not to drop or bump the Lg sensor, and don't remove or install it with an impact wrench; the Lg sensor may be damaged.

1. Remove the rear center trim panel (see section 20).
2. Remove the Lg sensor from the bracket.

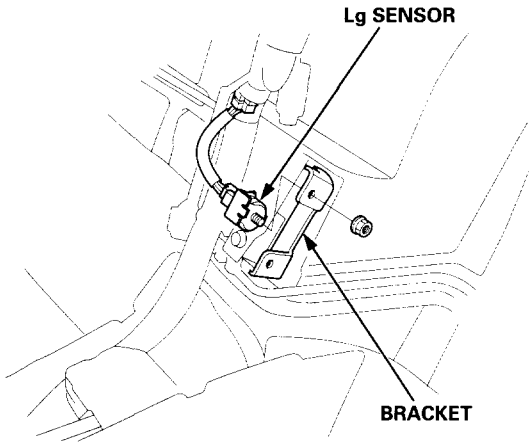

3. Turn the ignition switch ON (II).
4. Measure the voltage between terminal No. 1 and No. 2 with the connector connected.
   - There should be approx. 2.5 V when the Lg sensor is vertical.
   - There should be approx. 1.5 V when the Lg sensor is horizontal with the connector side facing up.
   - There should be approx. 3.5 V when the Lg sensor is horizontal with the connector side facing down.

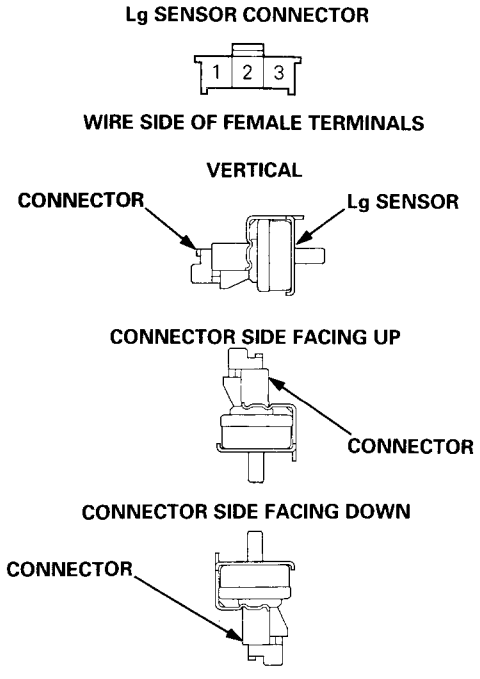

Steering Angle Sensor Replacement

Removal

1. Remove the steering column covers.

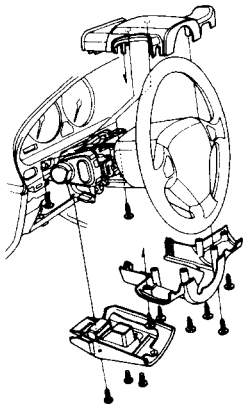

2. Disconnect the 5P connector from the steering angle sensor.

3. Remove the steering angle sensor mounting bolts and washers, then remove the steering angle sensor.

   NOTE: Do not lose the adjusting shims used between the steering angle sensor and sensor mounting bracket.

   CAUTION: Do not damage or drop the steering angle sensor as it is sensitive.

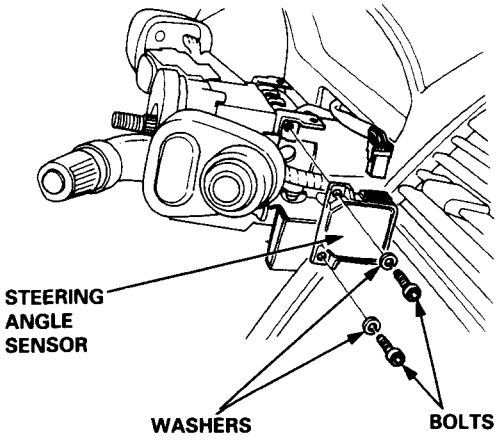

Installation

1. Install the steering angle sensor by tightening two bolts, and make sure the adjusting shims are installed properly.

   CAUTION: Do not apply any grease or oil to the adjusting shim.

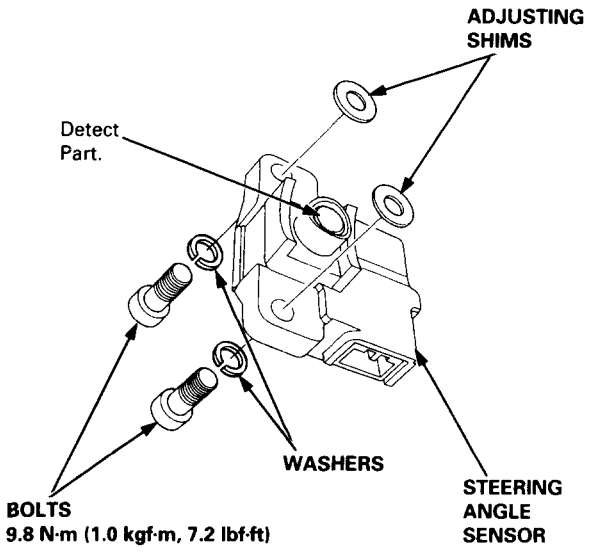

2. Connect the 5P connector to the steering angle sensor.

3. Install the steering column covers.

4. Perform the steering angle sensor system check (see page 19-125).

   NOTE:
   - There is no need to select (replace) the shims when the steering angle sensor is replaced. Use the original shims.
   - Selection (Replacement) of the adjusting shims (for adjusting the air gap) is required only when the steering column assembly (without the sensor) is replaced.

Steering angle sensor system check

1. Start the engine.
2. Push the TCS switch three times within three seconds.

   NOTE: Always maintain the same number of rotations.
3. Turn the steering wheel slowly from left to right more than 1.5 turns.

   NOTE:
   - Start checking after the steering wheel moves at least 1.5 turns from right to left.
   - Turn the steering wheel slowly, no faster than one turn in four seconds.
4. Push the TCS switch twice within three seconds.

   NOTE: Always maintain the same number of rotations.
5. Return the steering wheel to the left side slowly, and check the number of times the TCS indicator light flashes after the wheel has moved approximately one turn.

   NOTE:
   - Start the check from the beginning when the steering wheel moves at least one turn from left to right.
   - Turn the steering wheel slowly, no faster than one turn in four seconds.

   Standard number of times the TCS indicator light flashes:
   Manual Transmission: 5 times
   Automatic Transmission: 2 times
6. If there is an abnormality, check the troubleshooting flowchart (see page 19-114).

Selection of the adjusting shims for the steering angle sensor air gap adjustment

NOTE:
- The adjustment of the air gap between the steering shaft and the steering angle sensor should be carried out in order to obtain adequate sensor output.
- The adjusting shim reference number is stamped on the steering column. Select the adjusting shims that match the reference number using the table below.

Reference Number Locations

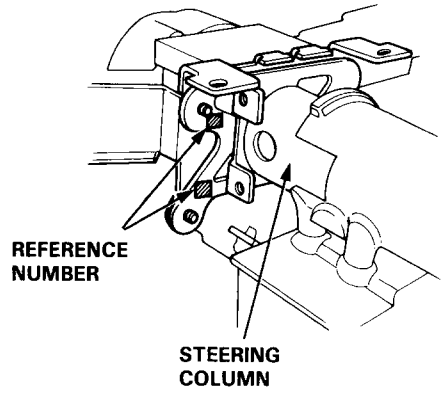

Selection of The Adjusting Shim

Reference Number	Shim (P/N): (Thickness)
1	Not used: (0 mm)
2	A: (0.1 mm)
3	B: (0.2 mm)
4	A + B: (0.3 mm)
5	C: (0.4 mm)
6	A + C: (0.5 mm)
7	B + C: (0.6 mm)
8	D: (0.7 mm)

Adjusting Shim

Parts Number	Thickness	Color
A: 53395 – SL0 – A01	0.1 mm	Yellow
B: 53396 – SL0 – A01	0.2 mm	Black
C: 53397 – SL0 – A01	0.4 mm	Green
D: 53398 – SL0 – A01	0.7 mm	White

TCS Control Unit Replacement

1. Remove the left rear trim panel and rear upper trim panel (see section 20).
2. Remove the wire harness bracket.
3. Disconnect the TCS control unit connectors.
4. Remove the TCS control unit.

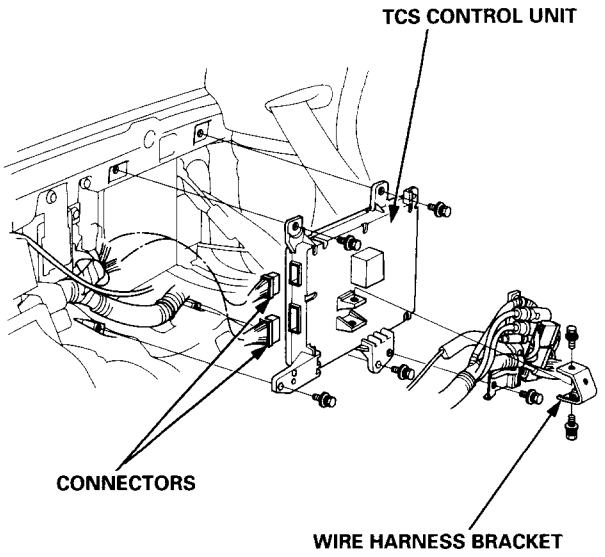

5. Install the TCS control unit in the reverse order of removal.

Body

*: Read SRS precautions before working in this area

Coupe and Common Components

Special Tools 20–2
Construction
Features 20–3
Composition 20–4
Types and Materials of Exterior Resin Parts 20–5

Doors

Component Location Index 20–6
Disassembly 20–7
Molding Removal 20–12
Door Removal 20–12
Assembly 20–13
Glass Adjustment 20–14
Position Adjustment 20–19
Striker Adjustment 20–19
Door Lower Trim (’02–05 Models)
Replacement 20–6e

Mirrors

Removal 20-20
Mirror Holder Replacement 20–20
Rearview Mirror
Replacement 20–46

Front and Center Pillar Retainer/ Upper Weatherstrip/ Center Pillar Panel

Replacement 20-21

Windshield, Rear Window, Rear Hatch Glass

Component Location Index 20–22
Windshield
Removal 20-23
Installation 20–24
Rear Window
’97–98 Models
Removal 20–27
Installation 20–29
’99–05 Models
Removal 20–2b
Installation 20–3b
Rear Hatch Glass
Removal 20–33
Installation 20–33
Rear Hatch Glass Molding
Replacement 20–36

Interior

Headliner/Interior Trim
Replacement 20–38
Interior Trim (’00–05 Models)
Replacement 20–2c
Carpet
*Replacement 20–47

Seats

Replacement 20–39
Seat Cover Replacement 20–40
Seat Belts
*Replacement 20–43
*Inspection 20–45
Child Seat Anchor Plate
’97–99 Models 20–46
Child Seat Tether Anchor
Removal/Installation
’00–05 Models 20–3c
Center Armrest
Replacement 20–49

Dashboard

*Component Removal/ Installation 20–50
*Replacement 20–55

Exterior

Front Bumper
’97–01 Models
Replacement 20–58
Disassembly 20–59
’02–05 Models
Replacement 20–2e
Disassembly 20–3e
Rear Bumper (’02–05 Model)
Disassembly 20–4e
Bumper Mesh (’02–05 Models)
Replacement 20–5e
Hood
Replacement/Adjustment ... 20–62
Emblem (’99–05 Models)
Installation 20–6b
Trunk Lid
Replacement/Adjustment ... 20–65
Trunk Lid Spoiler/Trunk Trim Panel
Replacement 20–66
Trunk Sub–spoiler (’02–05 Models)
Replacement 20–10e
Side Air Scoop/Side Sill Panel/ Side Step Panel
Replacement 20–70
Side Sill Panel (’02–05 Models)
Replacement 20–8e

Opener/Latch/Opener Cable

Replacement 20–63
Rear Hatch/Engine Cover
Replacement/Adjustment ... 20–64
Opener Cables
Replacement 20–67
Opener/Latch
Replacement 20–68
Trunk Lid Opener Actuator (’03–05 Models)
Replacement 20–2f

Frame

Front Sub–frame/Battery, Spare Tire Holder 20–72
Rear Sub–frame 20–73
Frame Repair Chart 20–74

NSX–T (Open Top) Components

See CAUTION if roof maintenance is required.

Construction
Features 20–78
Roof Rail Trim, Front and Rear
Replacement 20–79

Roof

Component Location Index 20–81
Roof Trim/Panel
Replacement 20–82
Roof Side Lock Replacement ... 20–83
Roof Side Seal/Retainer
Replacement 20–84
Roof Side Lock Unit
Replacement 20–89
Roof Lock Guides
Replacement 20–90
Rear Roof Stop Guide
Replacement 20–91
Lock Recievers
Replacement 20–92
Adjustment 20–92
Front Pillar Seal/Retainer
Replacement 20–94
Rear Pillar Seal/Retainer
Replacement 20–100
Seals/Retainers Alignment
Adjustment 20–106
Water Leak Test 20–110
Engine Cover/Roof Cover
Removal 20–111
Replacement 20–112

Special Tools

Ref. No.	Tool Number	Description	Qty	Page Reference
①	07MAZ—SP00200	SRS Service Connector	2	20-55, 20-56

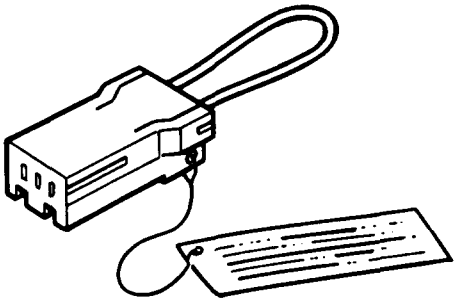

①

Construction

Features

- Mid-engine car with ground-hugging, full-forward canopy design.
- The lower body is AH-PO for greater resistance to corrosion and collision damage.
- Outer panels, (except the roof) are constructed of individual panels to allow more convenient and economical repairs.
- In considerations of rigidity, surface smoothness and simultaneous body painting, the trunk lid spoiler is made of UP-G.

① Straight-line front side-frame for excellent absorption of front impact energy.

② Extruded-molded side sills with high strength and rigidity.

③ Lower part of center pillar is designed as flare-type and united solidly to main frame, thus greatly improving rigidity.

④ All main-frame parts are joined smoothly, providing high impact strength and improving body rigidity.

⑤ Large cross-section rear frame to protect fuel tank in the event of rear impact.

⑥ Rear fenders are detachable to make minor collision repairs easier.

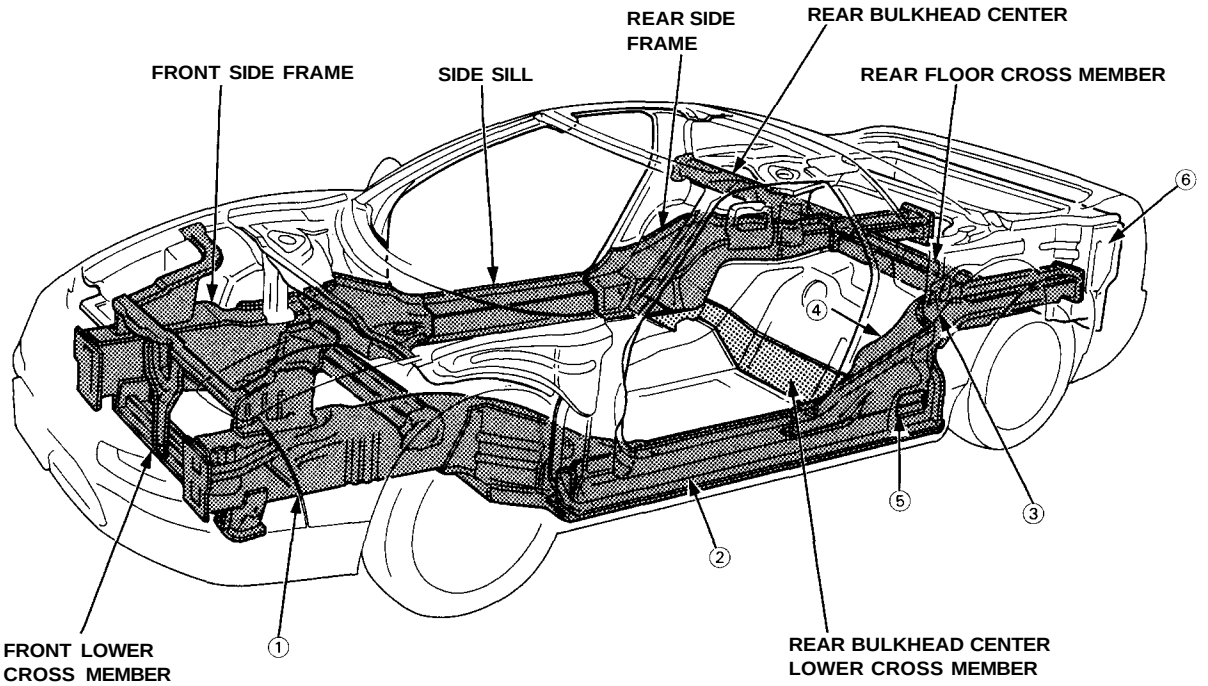

Construction

Composition

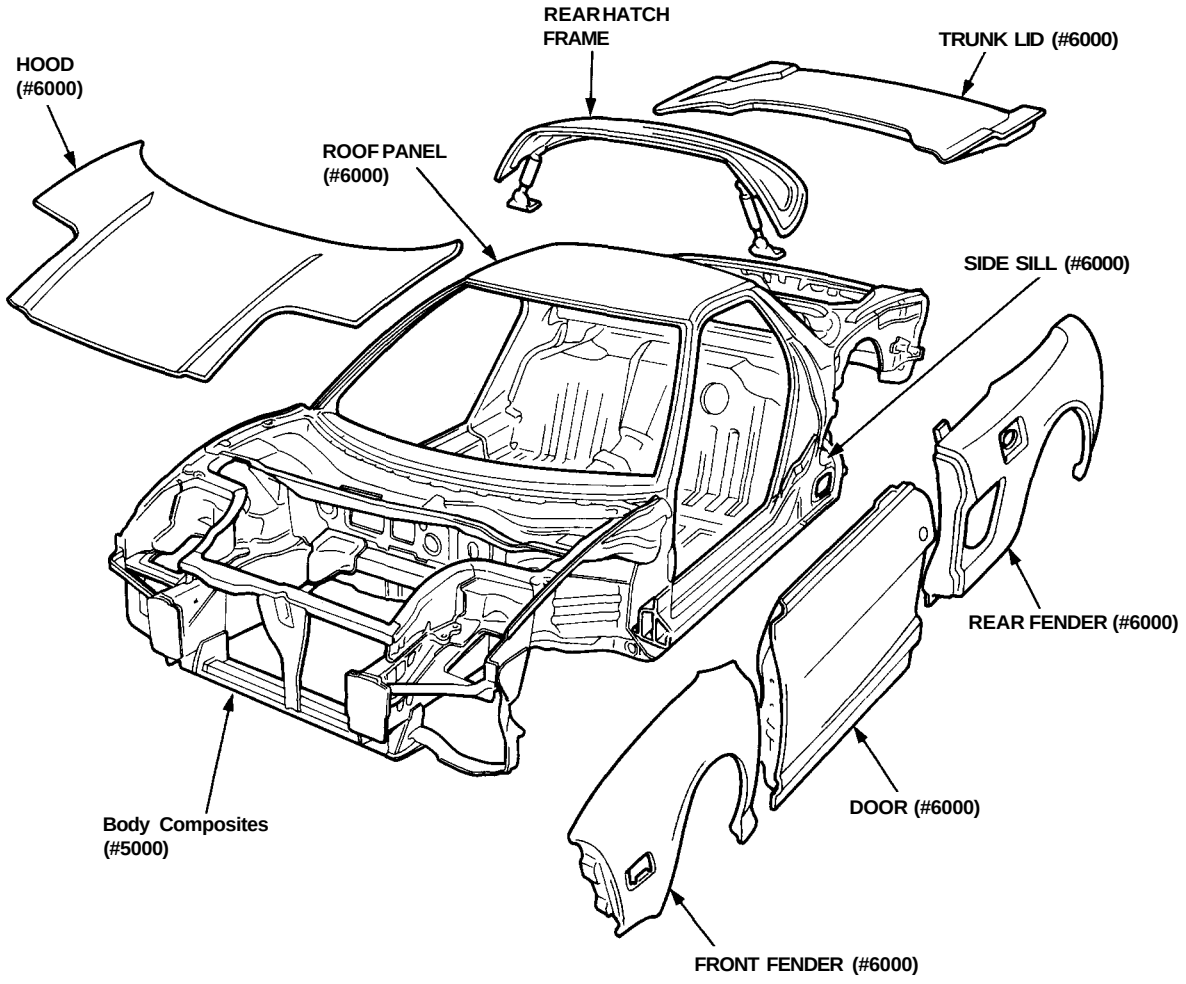

Types of aluminum alloys for pressings:

Alloy	Part	Material properties
Non-heat-treated alloys #5000, Aluminum-Magnesium (Al-Mg)	Body composites (HA5182P-0)	Good corrosion resistance, weldability and mallability.
Heat-treated #6000, Aluminum-Magnesium-Silicone	Exterior surface skin (HAW6383P-T4 or HASG112P-T4) Roof panel (HAW6383P-T4 or HASG112P-T4) Side sills (HACF60-T5)	Excellent mallability and corrosion resistance (HAW6383P-T4 or HASG112P-T4 is particularly resistant to corrosion.)

Types and Materials of Exterior Resin Parts

NOTE: A standard symbol is stamped on the underside of each resin part to show the type of material used.

Example:
HONDA
>PP<

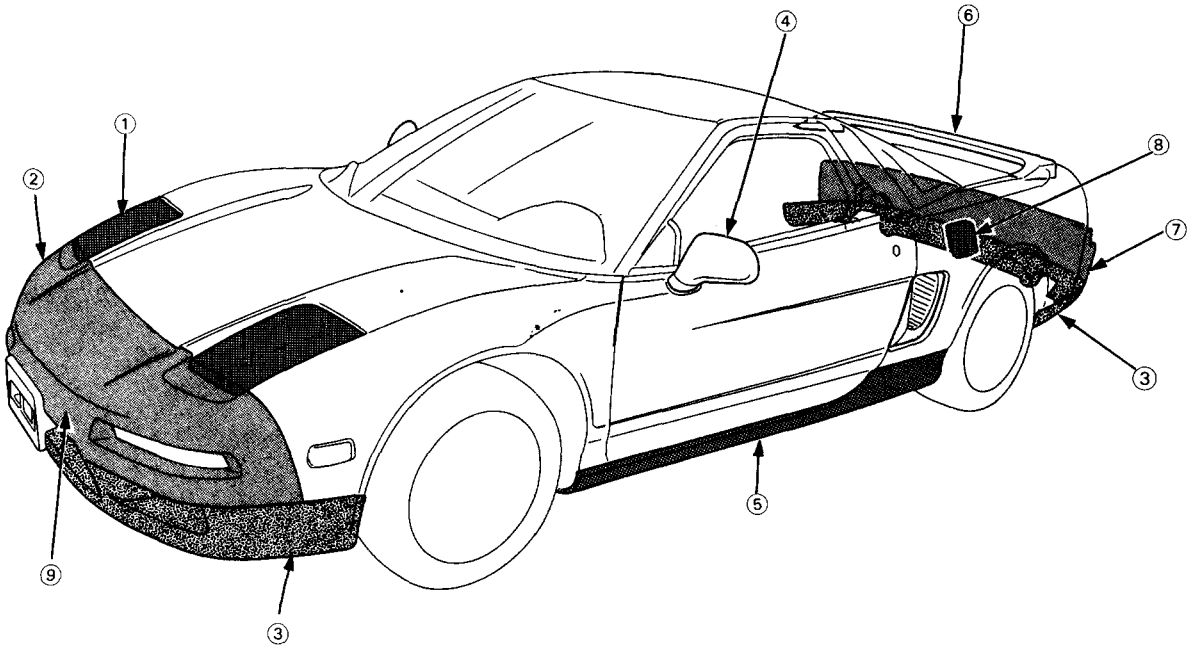

NO.	Part Name	Material	Replacement
①	Headlight lid	PA6/PPE-M Polyamide/Polyphenylene ether	see section 23
②	Front bumper	PBT-P Polybutylene terephthalate	see page 20-58
③	Front and rear skirts	PP Polypropylene	see pages 20-59, 20-61
④	Mirror	ABS Acrylonitrile butadiene styrene	see page 20-20
⑤	Side sill panel	PA6/PPE-M Polyamide/Polyphenylene ether	see page 20-71
⑥	Trunk lid spoiler	UP-G Polyster unsaturated thermoset	see page 20-66
⑦	Rear bumper	PBT-P Polybutylene terephthalate	see page 20-60
⑧	Fuel filler lid	PA6/PP-E Polyamide/Polyphenylene ether	see page 20-68
⑨	Washer Tank	PP Polypropylene	see page 20-59

Index

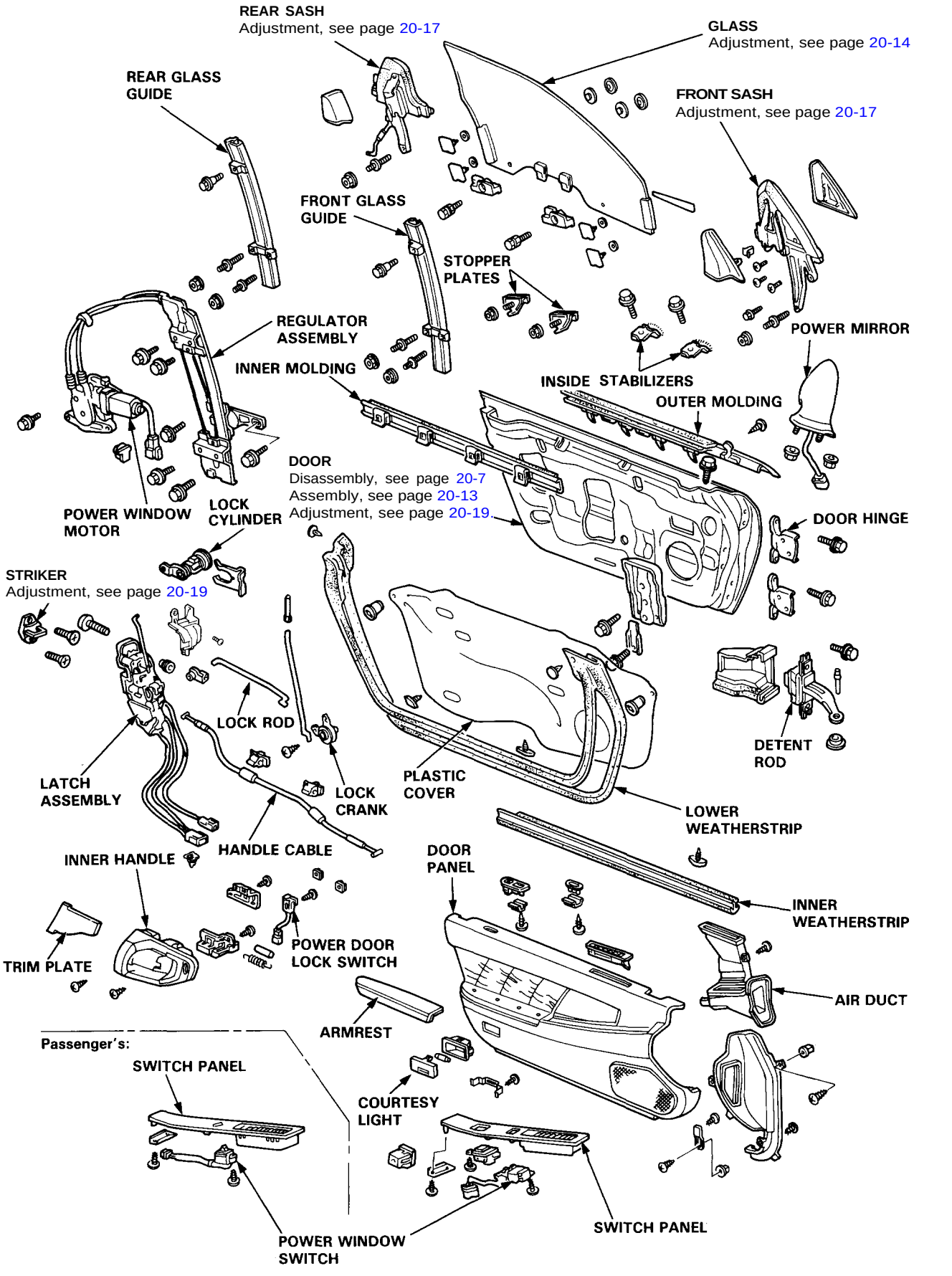
REAR SASH
Adjustment, see page 20-17
GLASS
Adjustment, see page 20-14
REAR GLASS GUIDE
FRONT SASH
Adjustment, see page 20-17
FRONT GLASS GUIDE
STOPPER PLATES
REGULATOR ASSEMBLY
INNER MOLDING
POWER MIRROR
INSIDE STABILIZERS
OUTER MOLDING
DOOR
Disassembly, see page 20-7
Assembly, see page 20-13
Adjustment, see page 20-19
POWER WINDOW MOTOR
LOCK CYLINDER
DOOR HINGE
STRIKER
Adjustment, see page 20-19
LOCK ROD
DETENT ROD
LATCH ASSEMBLY
LOCK CRANK
PLASTIC COVER
LOWER WEATHERSTRIP
INNER HANDLE
HANDLE CABLE
DOOR PANEL
INNER WEATHERSTRIP
TRIM PLATE
POWER DOOR LOCK SWITCH
AIR DUCT
ARMREST
Passenger's:
SWITCH PANEL
COURTESY LIGHT
POWER WINDOW SWITCH
SWITCH PANEL

Disassembly

NOTE: Lower the glass fully.

1. Carefully pry out the trim plate with a flat tip screwdriver as shown.

   CAUTION: To prevent damage to the trim plate, wrap the end of the screwdriver with a shop towel.

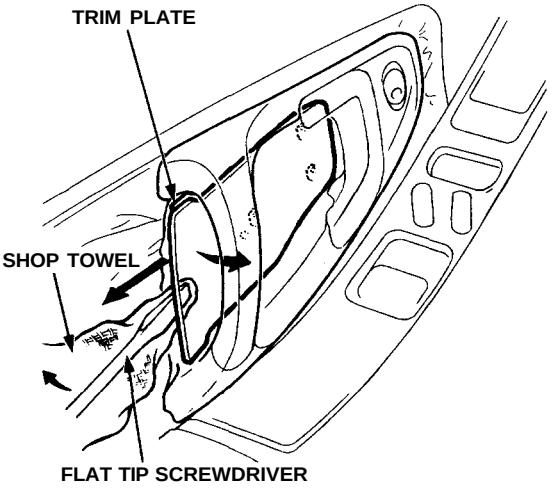

2. Remove the trim plate by pulling it backward, and remove the mounting screws.

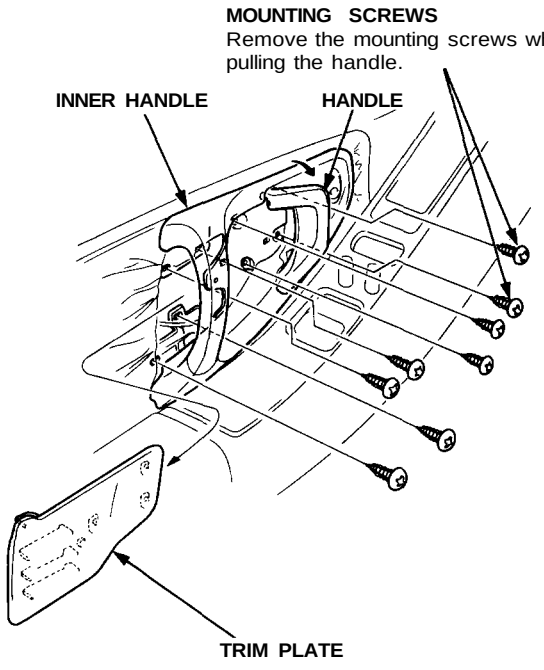

3. Disconnect the connector and handle cable, then remove the inner handle by pulling it forward.

   NOTE: Take care not to bend the handle cable.

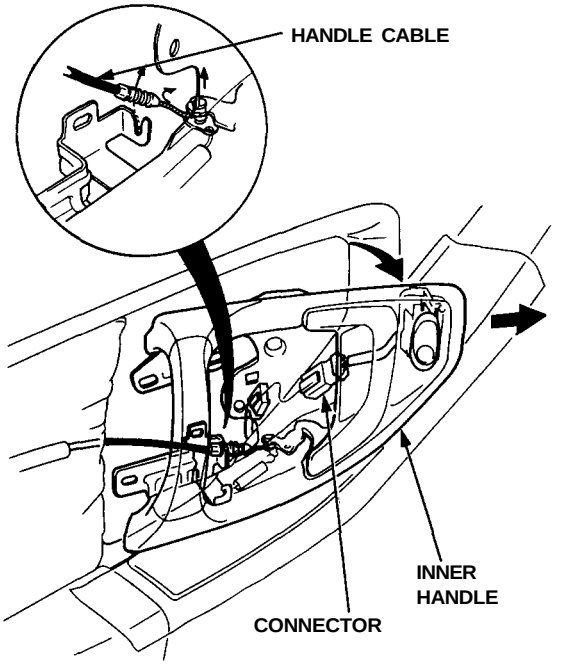

4. Carefully remove the front and rear sash covers.

   NOTE: Take care not to scratch the sash covers.

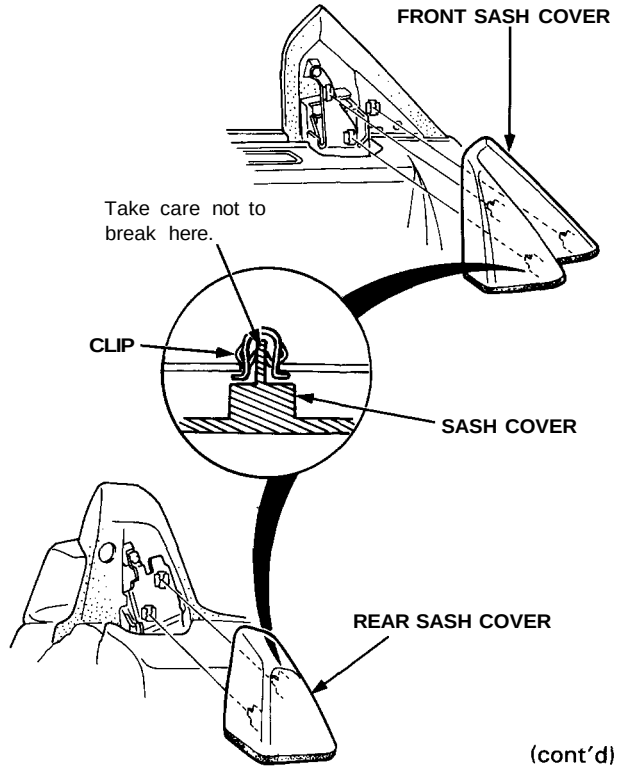

(cont'd)

Disassembly (cont'd)

5. Remove the mounting screws. Lift the door panel straight up off the sill.
   Disconnect the connectors:
   - Trunk lid opener
   - Power window/Door mirror
   - Courtesy light
   - Security alarm

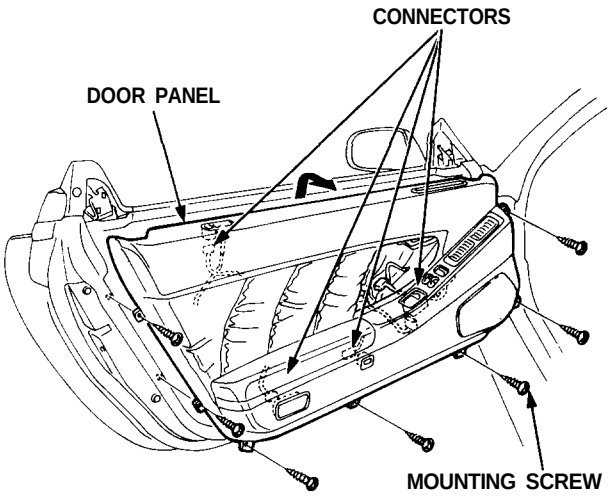

6. Remove the switch panel and air duct from the door panel as required.

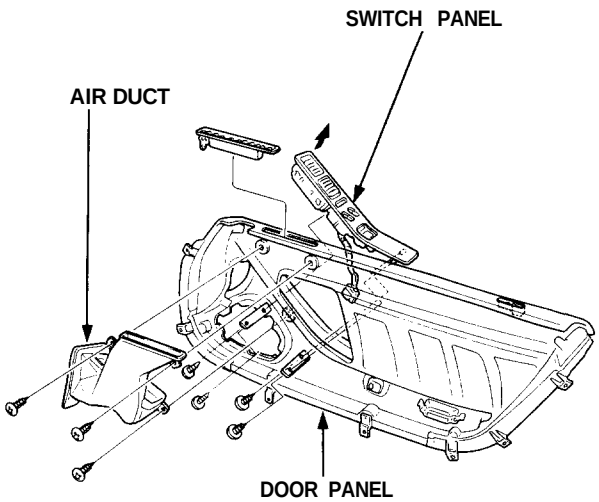

7. Remove the mounting screws and disconnect the connectors, then remove the power window control unit and speaker unit.

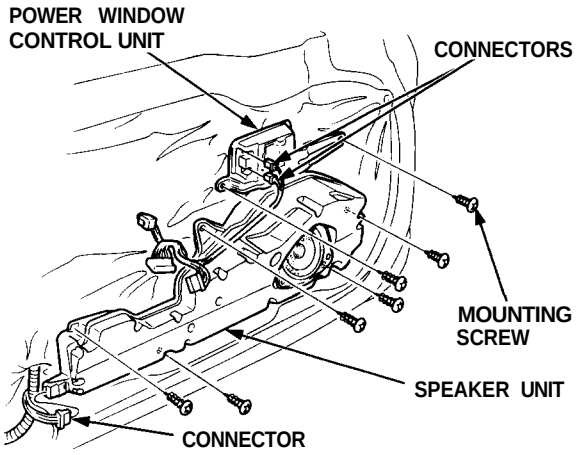

8. Remove the lower door weatherstrip retaining clips, then pull off the lower door weatherstrip. Remove the screw grommets, and carefully remove the plastic cover.

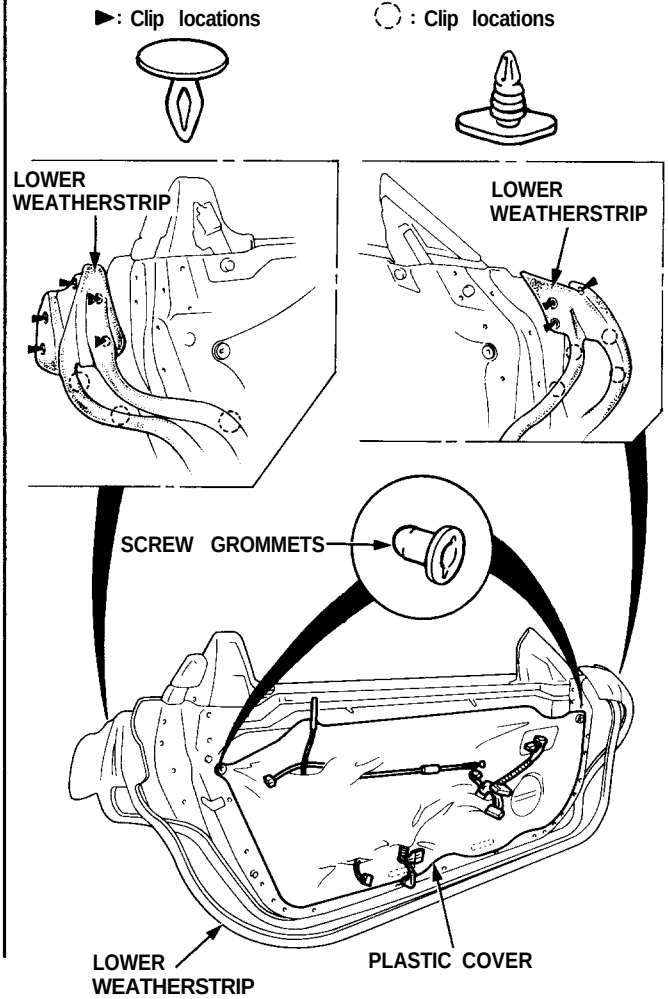

9. Remove the mounting screws, then remove the front sash panel from the front sash.

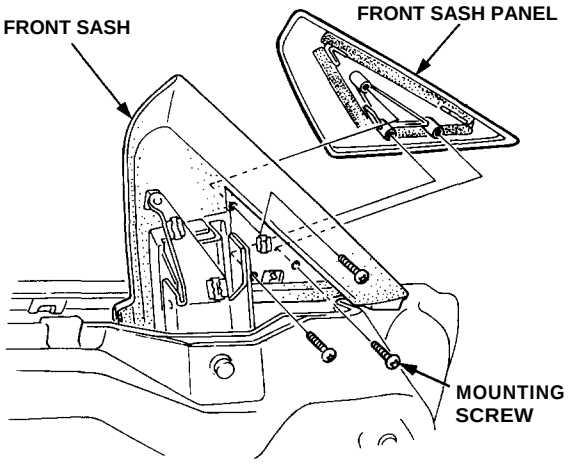

10. Remove the outer molding (see page 20-12).

11. Remove the mounting bolts and locknut, then remove the front sash.

NOTE:
- Hold the adjusting bolt with a hex wrench when removing the locknut.
- Scribe a line around the locknut to show the original adjustment.

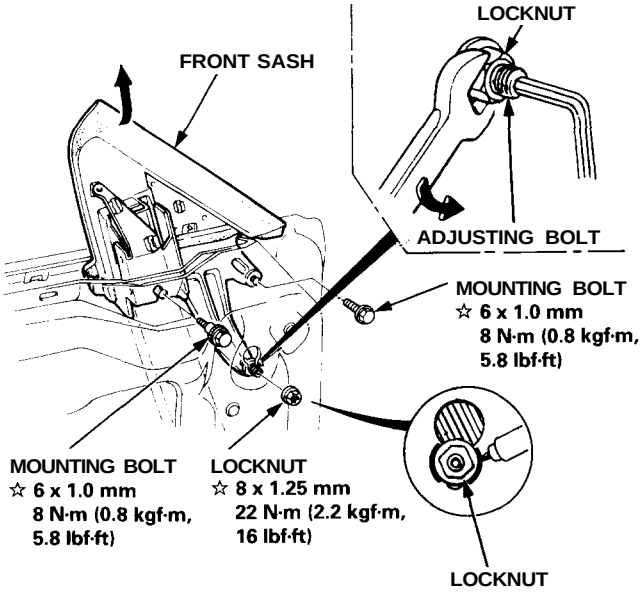

☆: CORROSION RESISTANT BOLT/NUT

12. Remove the mounting bolt, locknut and adjusting bolt. Remove the rear sash, then disconnect the handle rod.

NOTE:
- Before removing the adjusting bolt, measure and record the clearance Ⓐ between the rear sash and door.
- Scribe a line around the locknut to show the original adjustment.
- Take care not to bend the handle rod.

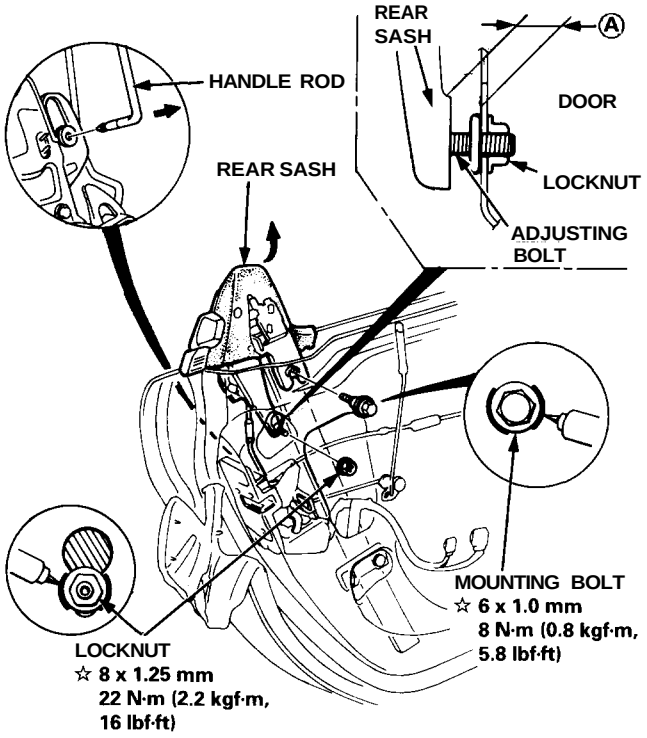

☆: CORROSION RESISTANT BOLT/NUT

13. To replace the outer handle, remove the mounting screws from the rear sash.

NOTE: Apply grease to the moving surfaces.

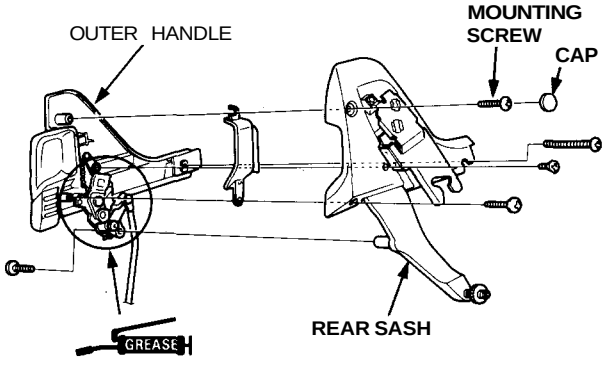

(cont'd)

Disassembly(cont'd)

14. Remove the locknuts, then remove the rear glass guide.

    NOTE:
    - Hold the adjusting bolt with a hex wrench when removing the locknuts.
    - Scribe a line around the locknuts to show the original adjustment.

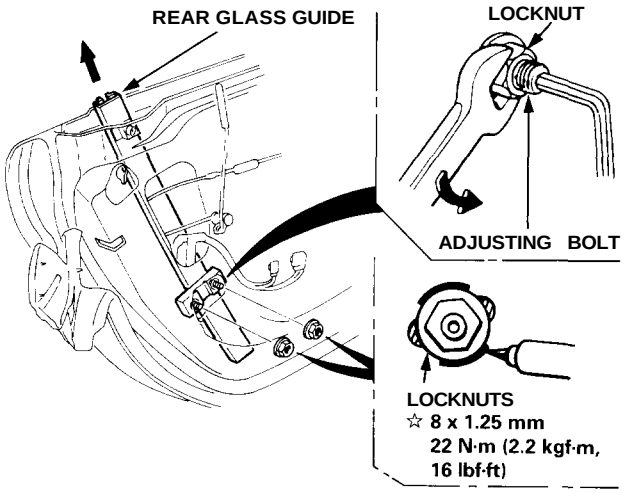

☆: CORROSION RESISTANT BOLT/NUT

15. Before removing the latch assembly and lock cylinder, raise the glass fully by connecting a 12 V battery to the power window motor (see section 23).

16. Remove the retainer by sliding it forward. Pry the cylinder rod out its joint using a flat tip screwdriver, then carefully remove the lock cylinder.

    NOTE: Take care not to bend the cylinder rod.

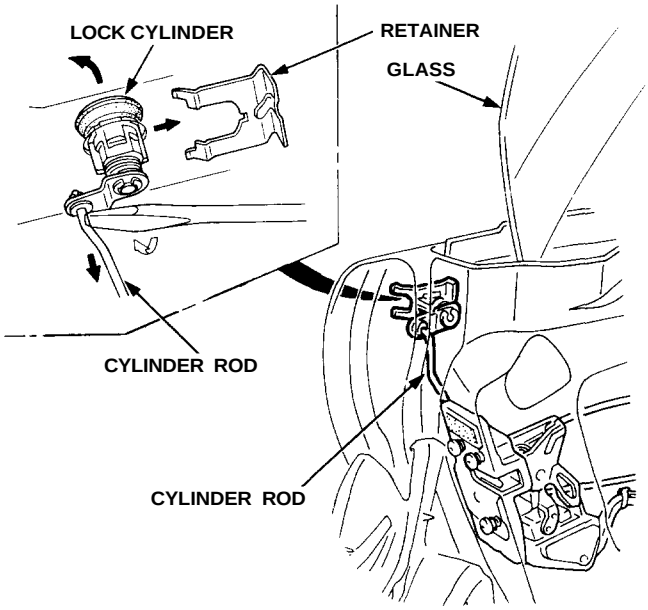

1 7. Disconnect the lock rod and remove the lock crank. Remove the handle cable and clips.
Remove the mounting screws, then remove the latch assembly through the hole in the door.

NOTE: Take care not to bend the lock rod and handle cable.

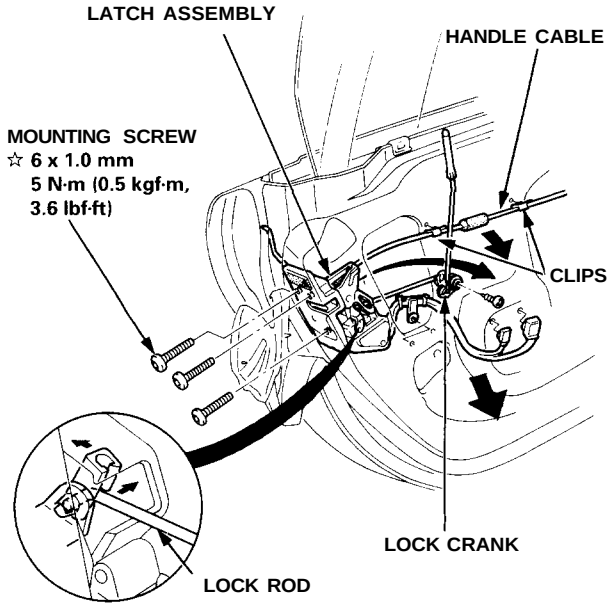

18. Lower the glass and remove the mounting nuts, then remove the stopper plates.

    NOTE:
    - Lower the glass by connecting a 1 2 V battery to the power window motor (see section 23).
    - Scribe a line around the mounting nuts to show the original adjustment.

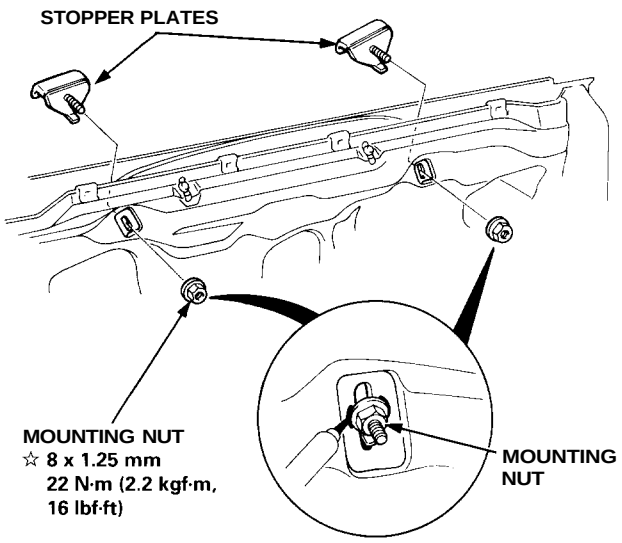

19. Carefully lower the glass until you can see its mounting bolts, then remove them. Pull the glass out through the window slot.

NOTE:
- Lower the glass by connecting a 12 V battery to the power window motor (see section 23).
- Scribe a line around the mounting bolts to show the original adjustment.

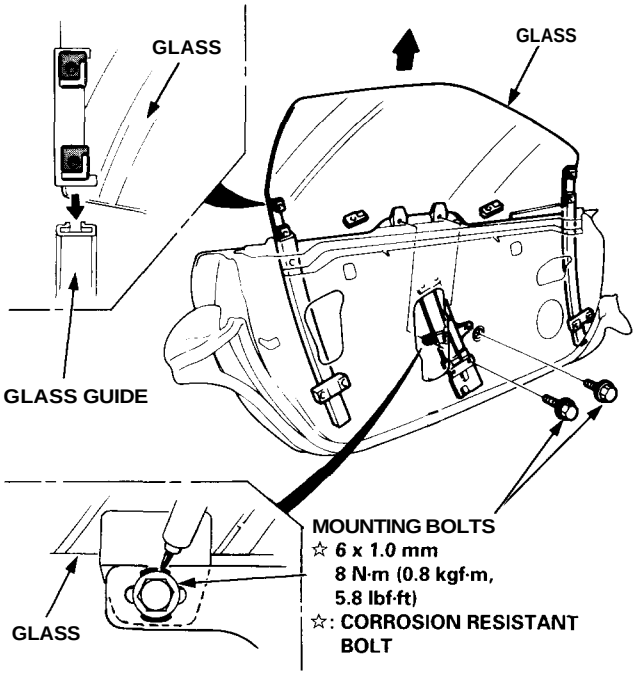

20. Remove the locknuts, then remove the front glass guide.

NOTE:
- Hold the adjusting bolt with a hex wrench when removing the locknuts.
- Scribe a line around the locknuts to show the original adjustment.

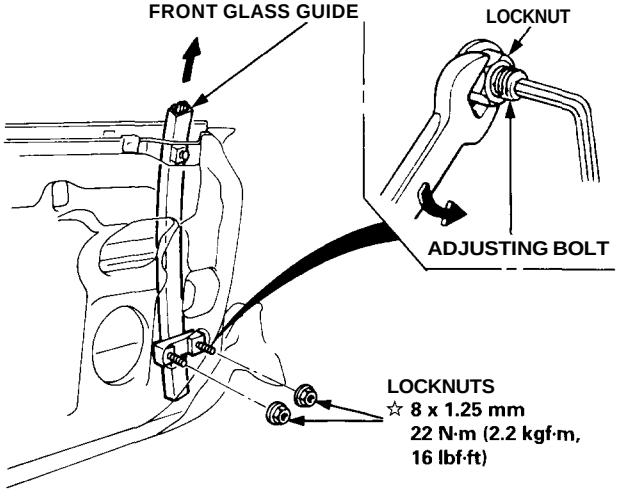

21. Remove the mounting bolts and loosen the motor mounting bolts, then take out the regulator assembly through the window slot.

NOTE:
- Scribe a line around the mounting bolts to show the original adjustment.
- Take care not to bend the cables.

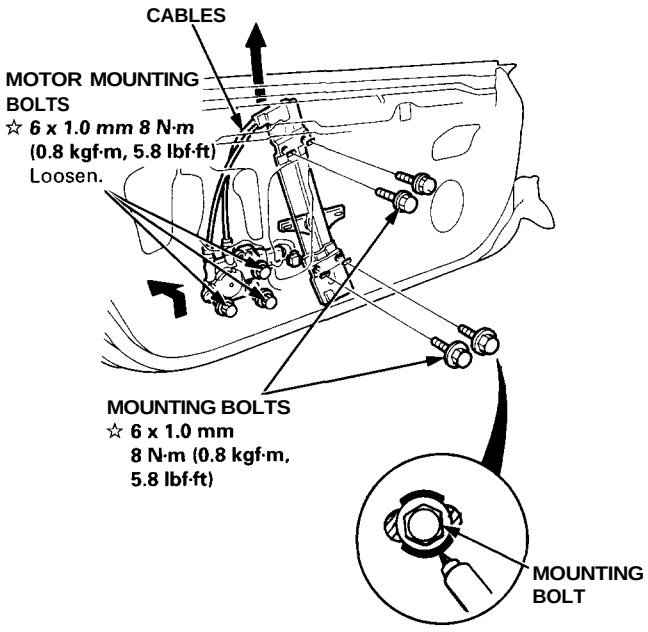

☆: CORROSION RESISTANT BOLT

22. Remove the mounting bolts, then remove the inside stabilizers from the door.

NOTE: Scribe a line around the mounting bolts to show the original adjustment.

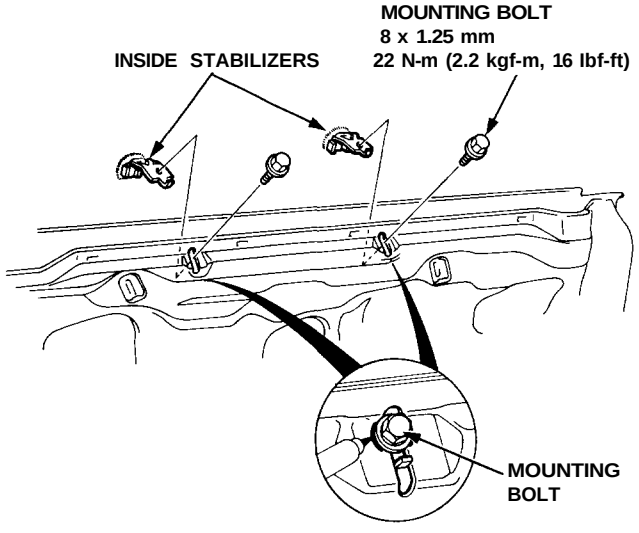

*: CORROSION RESISTANT BOLT

Doors

Moldings Removal

NOTE: Lower the glass fully.

Remove: (see pages 20-7, 20-8)
- Trim plate
- Inside door handle
- Sash covers
- Door panel

Inner molding:

NOTE: Pry the clips out using a flat tip screwdriver, then pull up the inner molding.

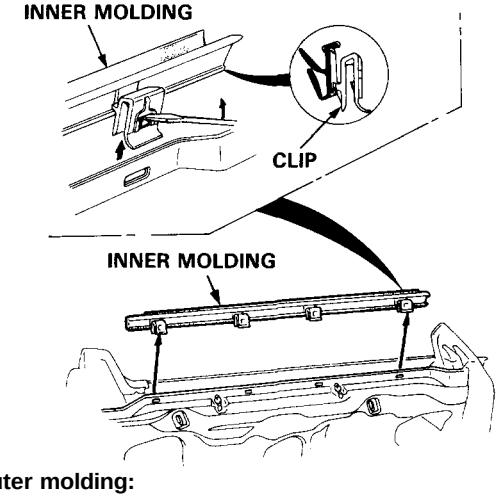

Outer molding:

NOTE:
- Remove the front sash panel (see page 20-9) and mounting screw.
- Starting at the front, release the clips, and lift and slide the outer molding forward.

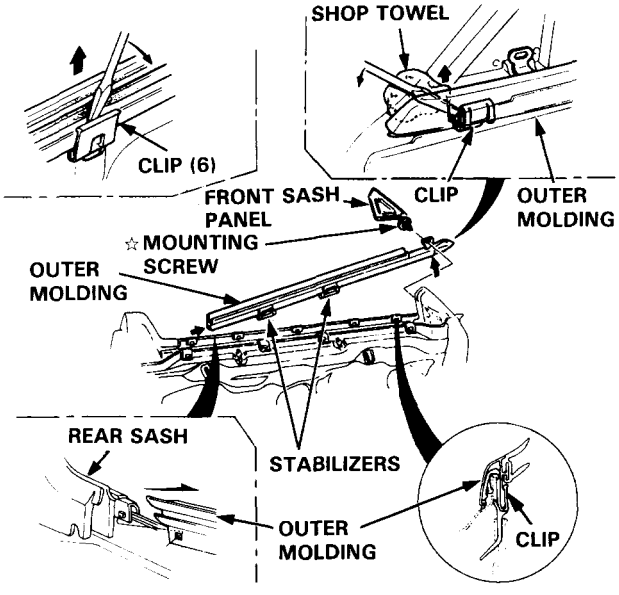

Installation is the reverse of the removal procedure.

NOTE:
- Before installing, set the clips onto the moldings.
- If necessary, replace any damaged clips.

☆: **CORROSION RESISTANT SCREW**

Door Removal

1. Lower the glass fully.
2. Remove the seat (see page 20-39).
3. Disconnect the connectors.
4. Remove the door by removing the door mounting bolts and detent rod pin, and by pulling out the wire harness.

CAUTION: Place a shop towel or rubber pad on the jack to prevent damage to the door.

NOTE: Let an assistant hold the door.

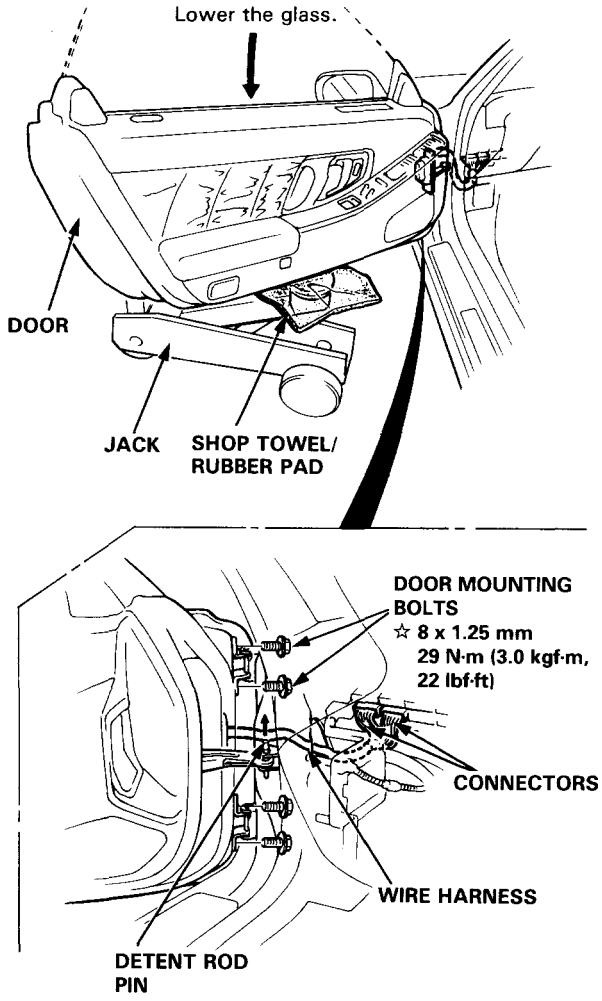

5. Installation is the reverse of the removal procedure.

NOTE: Adjust the door position (see page 20-19).

☆: **CORROSION RESISTANT BOLT**

Assembly

Assemble the door in the reverse order of disassembly, and also:

1. Grease all the sliding surfaces of the regulator assembly and the glass guides where shown.

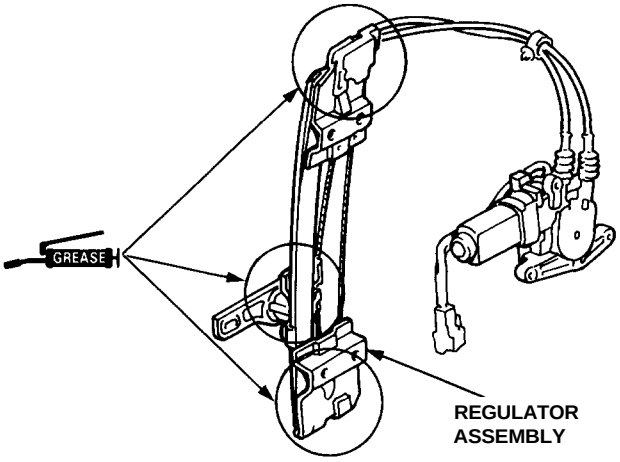

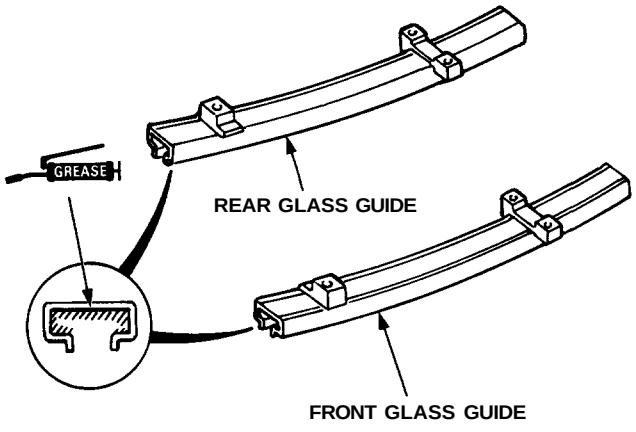

2. Roll the glass up and down to see if it moves freely without binding. Also make sure that there is no clearance between the glass and upper weatherstrip when the glass is closed. Adjust the position of the glass as necessary (see pages 20-14 to 20-18).

3. Attach the wire harnesses correctly on the door.

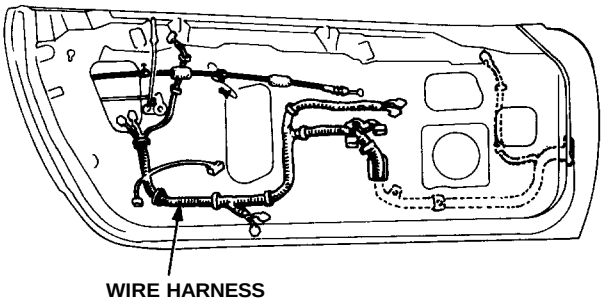

NOTE: Make sure the wire harnesses are not pinched.

4. When reinstalling the plastic cover, apply adhesive along the edge where necessary to maintain a continuous seal and prevent water leaks.

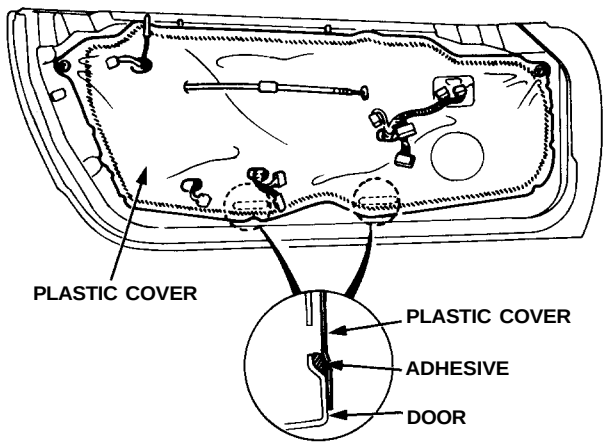

NOTE: Do not **fill** these openings with adhesive.

Glass Adjustment

* : Adjusting bolt locations.

NOTE: Take care not to damage location Ⓐ on the front and rear sashes.

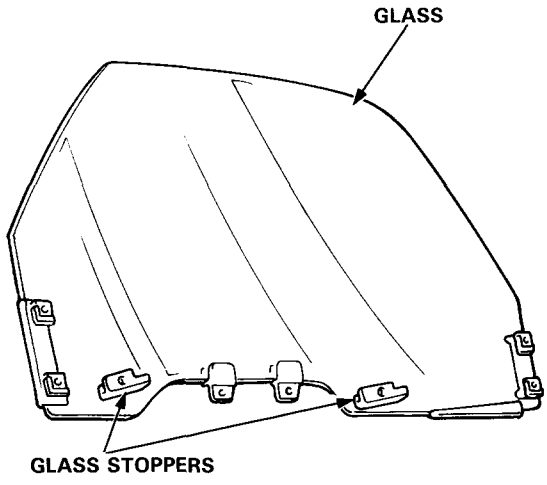

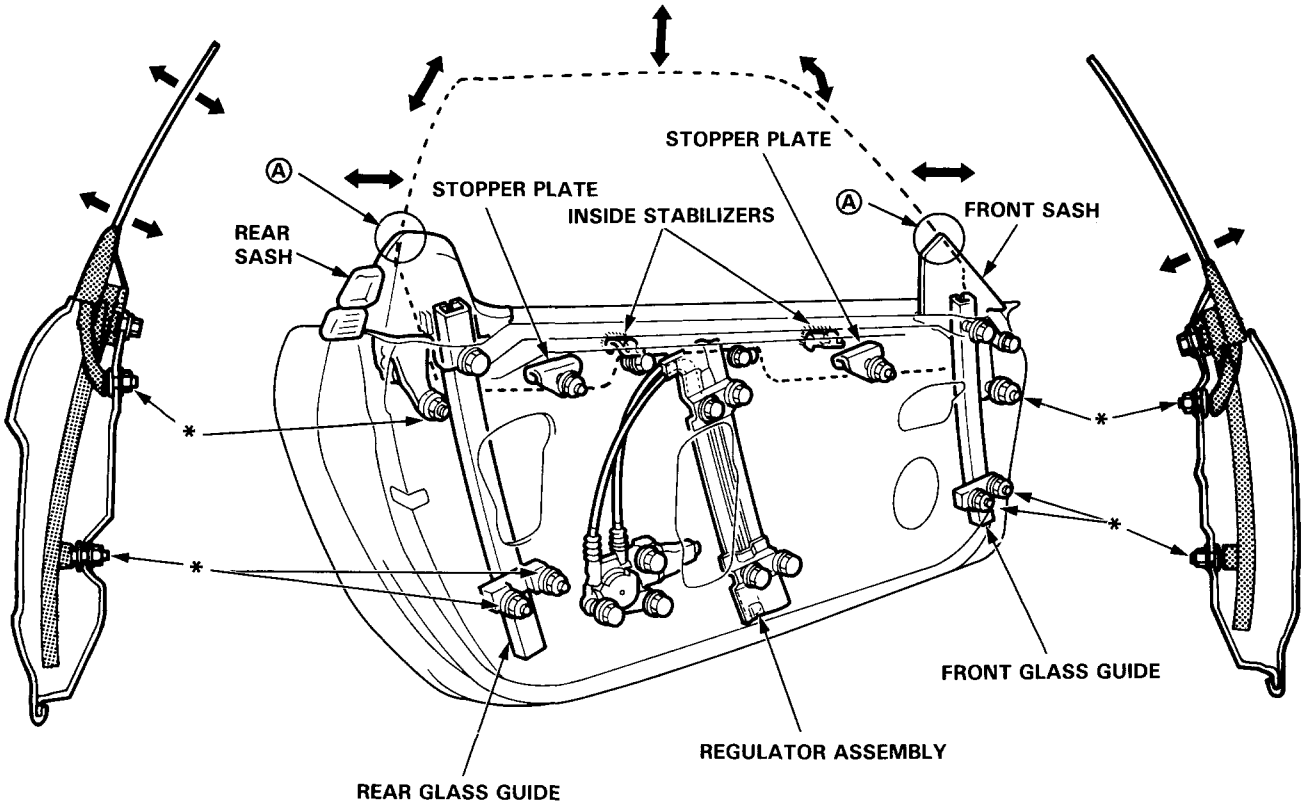

NOTE:
- Place the vehicle on a firm, level surface when adjusting the glass.
- Make sure the door position is adjusted properly before adjusting the glass (see page 20-19).
- Lower the glass fully.

1. Remove:
   - Door panel/Plastic cover (see pages 20-7, 20-8)
   - Door trim (see page 20-38)
   - Upper weatherstrip (see page 20-21)
   - Front and center pillar retainers (see page 20-21).

   NOTE: Check the weatherstrip for damage and deterioration, and replace it if necessary.

2. Remove the switch panel from the door panel (see page 20-8).

3. Connect the switch panel connector to the wire harness.

   NOTE: Take care not to scratch the switch panel.

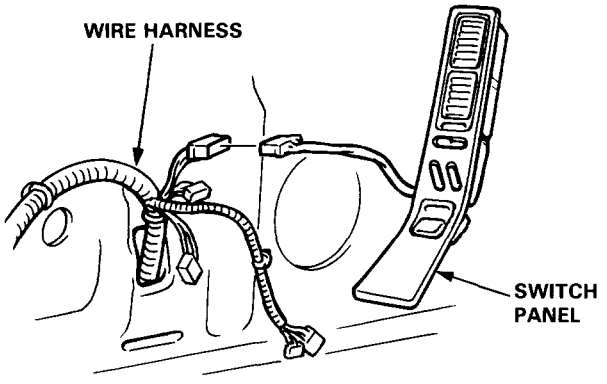

4. Carefully close the door while holding the door glass to prevent it from contacting the body panel.

5. Raise the glass fully.

   NOTE: Check the door fit to the body opening.

6. Measure and record the clearance "H" and "B" between the glass and body at the locations shown.

7. Adjust the clearance as described in the steps 8 thru 9.

Measuring Points:

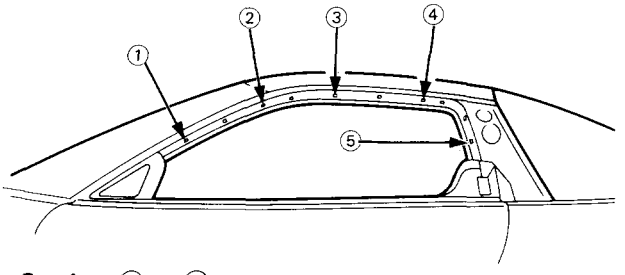

Section: ① — ②

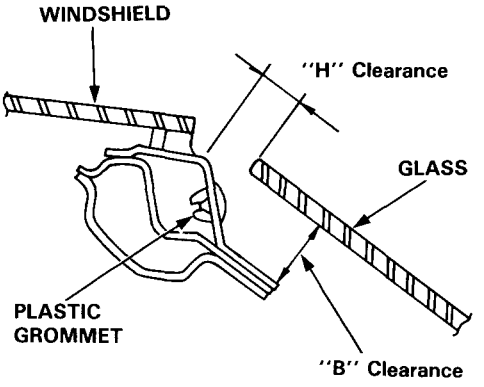

Section: ③ — ④

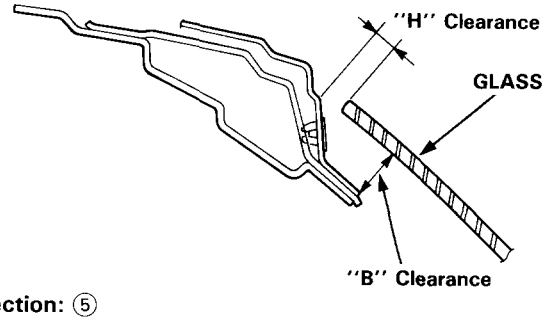

Section: ⑤

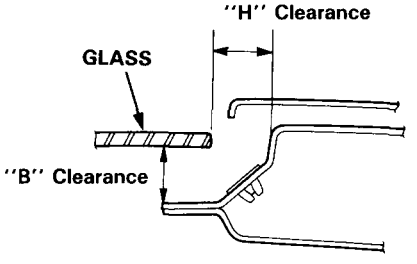

Standard Clearance:

- Permissible tolerance: ±2 mm (0.08 in)

Unit: mm (in)

Measuring Point		①	②	③	④	⑤
Clearance	H	12.1 (0.48)	11.8 (0.46)	10.4 (0.41)	10.2 (0.4)	23.7 (0.93)
	B	24.9 (1.0)	22.0 (0.9)	20.9 (0.8)	21.2 (0.83)	35.4 (1.4)

(cont'd)

Glass Adjustment (cont'd)

8. Adjust the Clearance "H" as follows:

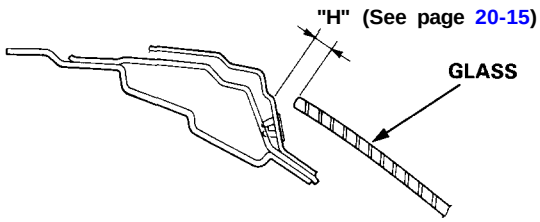

a. Loosen the bolts and nuts securing the front sash, rear sash and stopper plates, then move the front sash all the way forward and move the rear sash all the way backward.

NOTE: Hold the adjusting bolts with a hex wrench when loosening the locknuts.

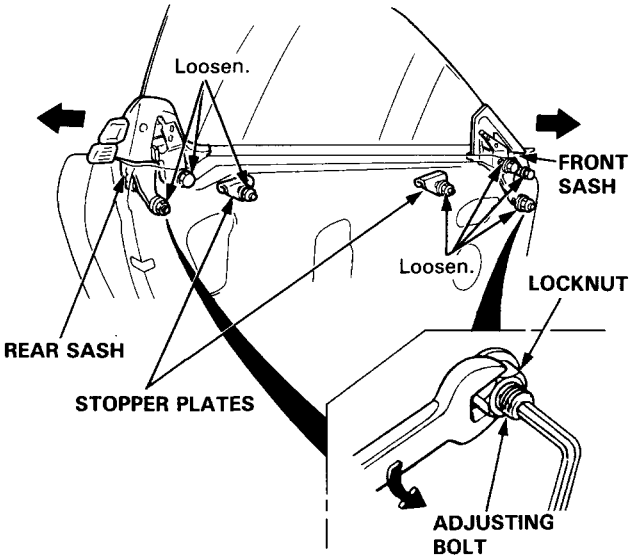

b. Loosen the bolts securing the regulator assembly, and move the regulator assembly fore or aft to align the glass with the body at the front and center pillars.

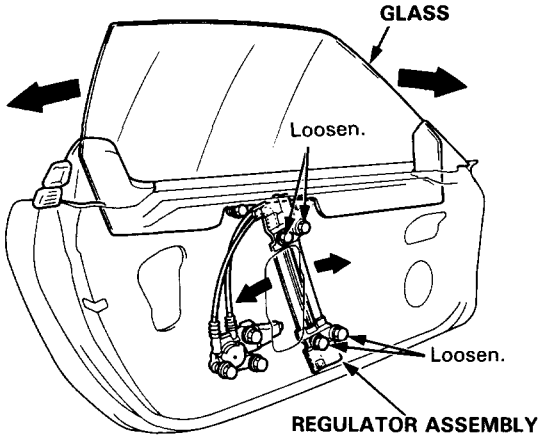

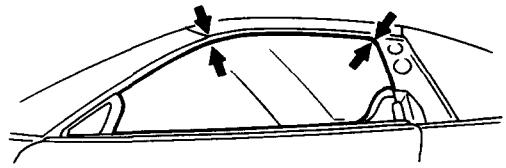

c. Loosen the nuts securing the rear glass guide, and adjust the glass fore and aft by moving the rear glass guide.

NOTE: Hold the adjusting bolts with a hex wrench when loosening the locknuts.

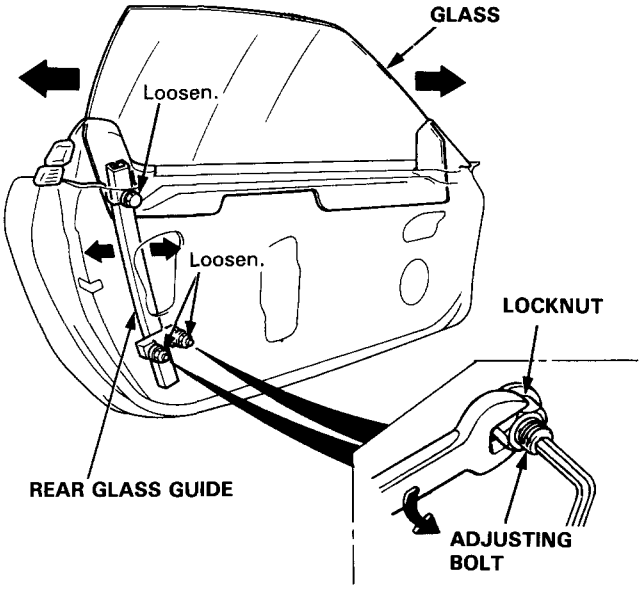

d. Repeat steps b and c until clearance "H" is within the specified limits, then secure the regulator and glass guide. Press the stopper plates against the glass stoppers, then secure the stopper plates.

NOTE: Check that the stopper plates contact the glass stoppers evenly.

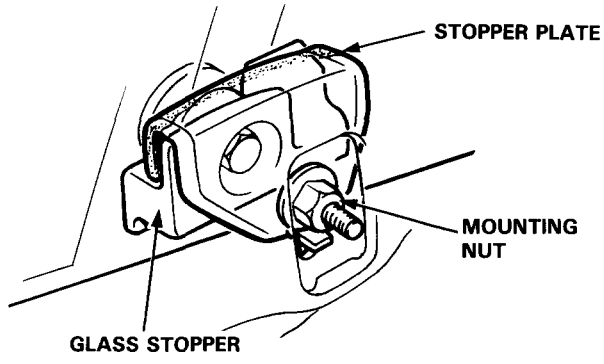

9. Adjust the clearance "B" as follows:

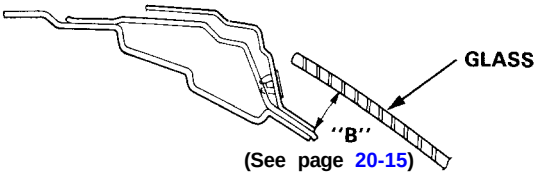

(See page 20-15)

NOTE: Raise the glass fully.

a. Lower the glass 10 mm (0.4 in)

b. Push the glass outward 10 mm (0.4 in), then push the inside stabilizers against the glass lightly. Retighten the mounting bolts securely.

NOTE: Check that the glass moves smoothly.

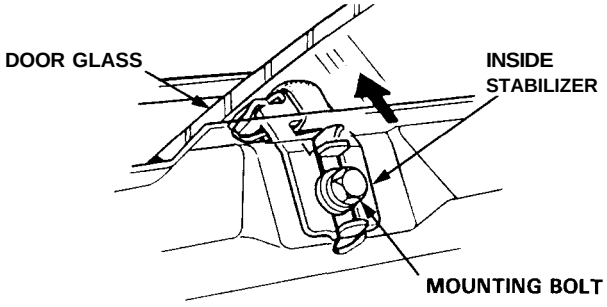

c. Raise the glass fully.

d. Loosen the locknuts, and turn the adjusting bolts until the clearance "B" is within the specified value.

Adjusting Bolt	Top Edge of Glass
Clockwise	➡ Moved out
Counter-clockwise	⇨ Moved in

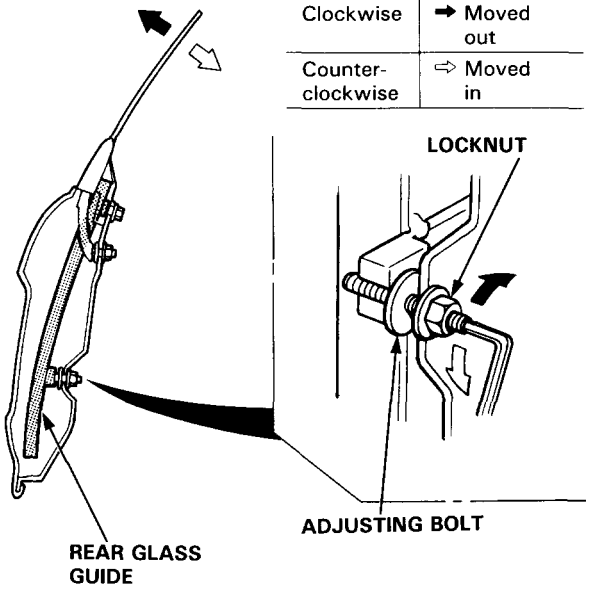

NOTE: Turn the front and rear adjusting bolts the same amount so as to keep the glass guide bracket parallel with the seating surface of the door. After tightening the adjusting bolts, make sure that the ends of the adjusting bolts still project out of the locknuts.

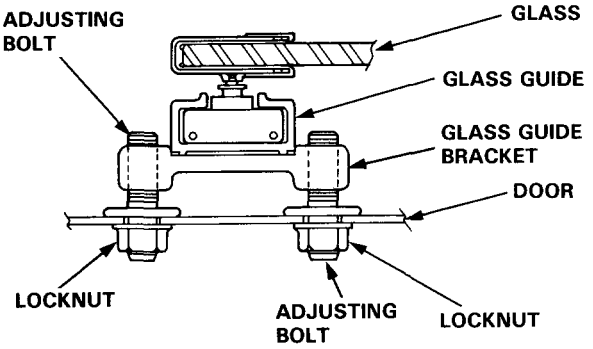

e. Align the front sash and rear sash with the glass with the adjusting bolts at the bottom of the sashes.

Adjusting Bolt	Top Edge of sash
Clockwise	➡ Moved out
Counter-clockwise	⇨ Moved in

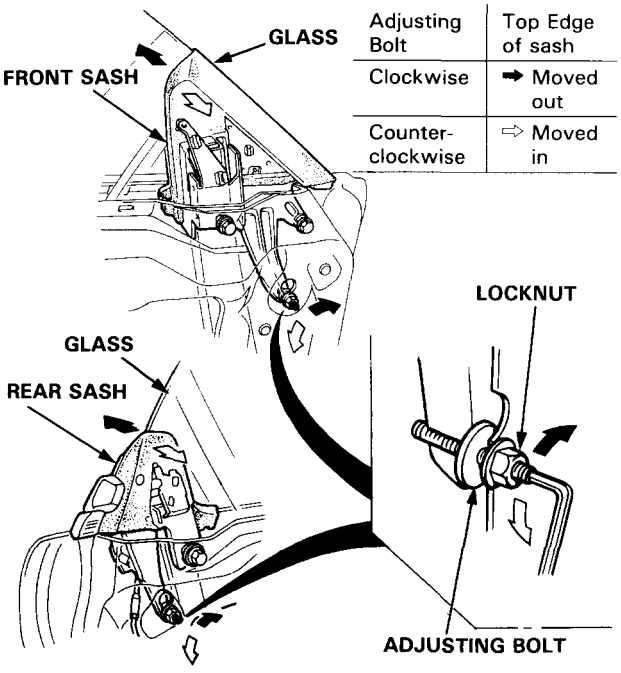

f. Move the glass up and down to seat it, then measure the clearance "B" at the designated locations (see page 20-15).

g. Again measure the clearance "H" to make sure it is still within the specified limit at the designated locations.

NOTE: Repeat the above steps until the correct clearances are obtained.

(cont'd)

Glass Adjustment (cont'd)

10. After the clearances have been adjusted properly, reinstall the retainers and upper weatherstrip.

11. Reinstall the door trim.

12. With the door and glass closed fully, check that the glass contacts with the upper weatherstrip evenly.

    NOTE: Measuring points are described on page 20-15.

Section: ① — ②

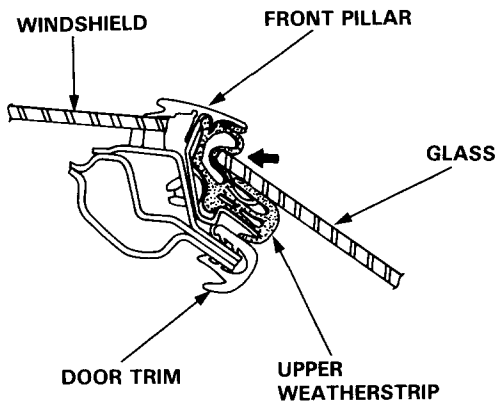

Section: ③ — ④

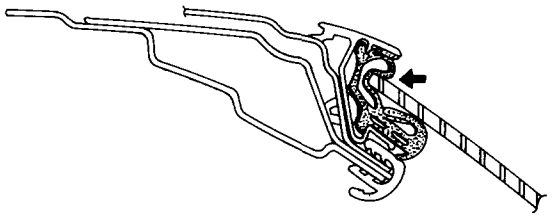

Section: ⑤

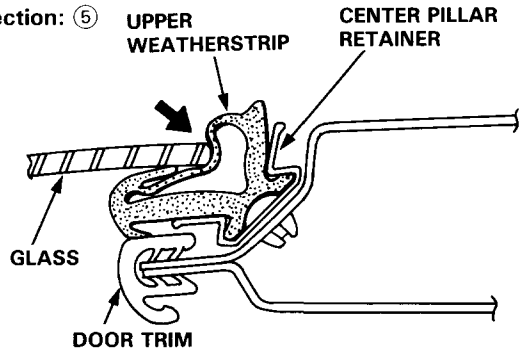

13. Check for water leaks.

    NOTE: Do not use high-pressure water.



14. Install the switch panel in the door panel.

15. Install the wire harness in the door.

16. Attach the plastic cover, and install the door panel.

Position Adjustment

After installing the door, check for a flush fit with the body, then check for equal gap between the front, rear, and bottom door edges and the body.
The door and body edges should also be parallel. Adjust at the door hinges as shown.

CAUTION: Place a shop towel or rubber pad on the jack to prevent damage to the door when the hinge bolts are loosened for adjustment.

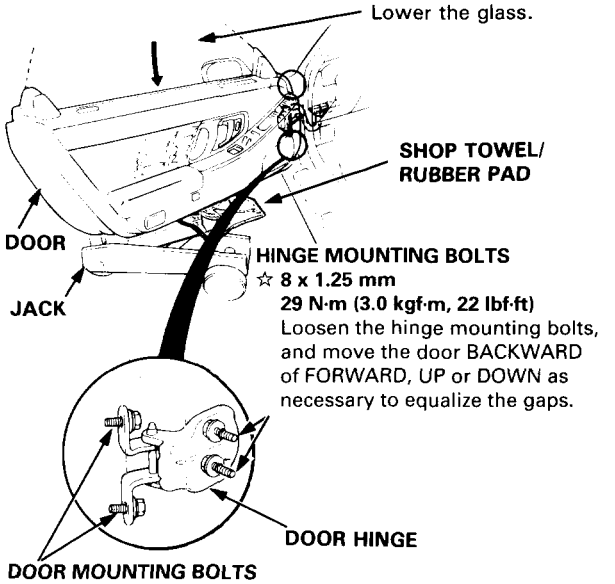

☆: **CORROSION RESISTANT BOLT**

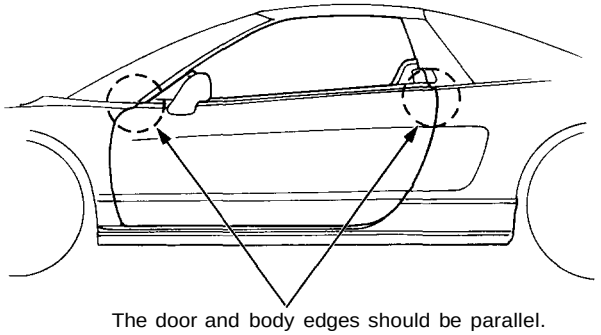

The door and body edges should be parallel.

NOTE: Check for water leaks.

Striker Adjustment

Make sure the door latches securely without slamming. If it needs adjustment:

1. Draw a line around the striker for reference.
2. Loosen the mounting screws, and move the striker IN or OUT to make the latch assembly fit tighter or looser. Move the striker UP or DOWN to align it with the latch assembly opening. Then lightly tighten the mounting screws and recheck.

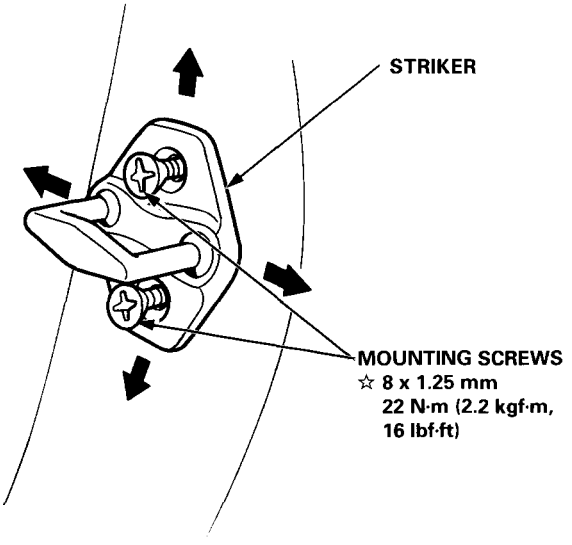

NOTE:
- Hold the outside handle out, and push the door against the body to be sure the striker allows a flush fit.
- Do not tap the striker with a metal hammer to adjust the position.

3. If the door latches properly, tighten the mounting screws and recheck.

NOTE: Replace the striker if it is cracked.

☆: **CORROSION RESISTANT SCREW**

Mirror

Removal

NOTE: Raise the glass fully.

1. Remove the door panel, and carefully remove the plastic cover (see pages 20-7, 20-8).
2. Disconnect the connector.
3. Remove the mounting nuts from the hole in the door while holding the mirror.

   NOTE: Do not drop the mounting nuts inside the door.

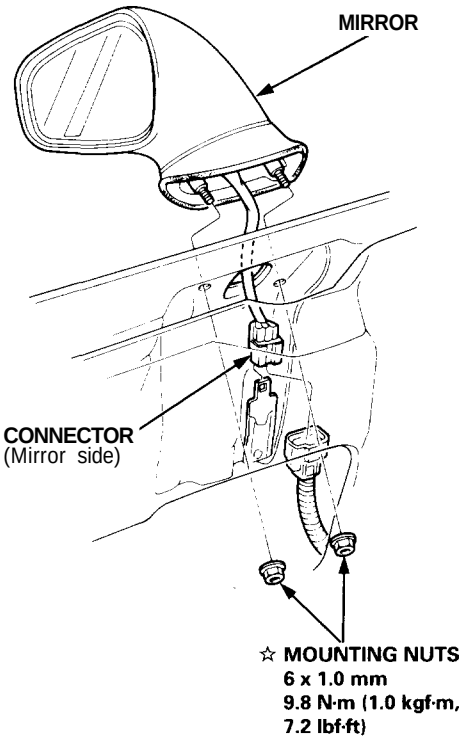

4. Installation is the reverse of the removal procedure.
5. Check for water leaks.

   NOTE: Do not use high-pressure water.

☆: CORROSION RESISTANT NUT

Mirror Holder Replacement

1. Insert a Phillips screwdriver in the door mirror through the service hole, then loosen the actuator retaining screw.

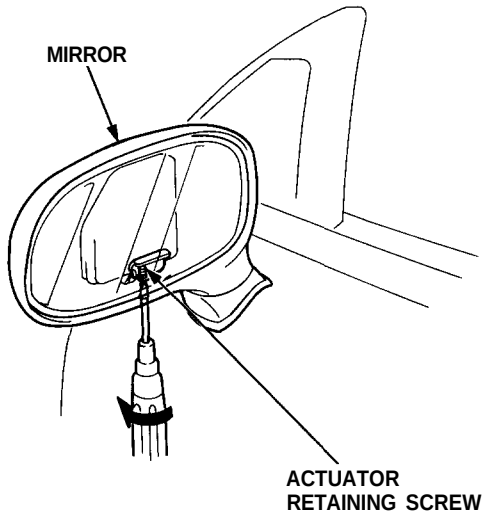

2. Pull the mirror holder out of the mirror housing.

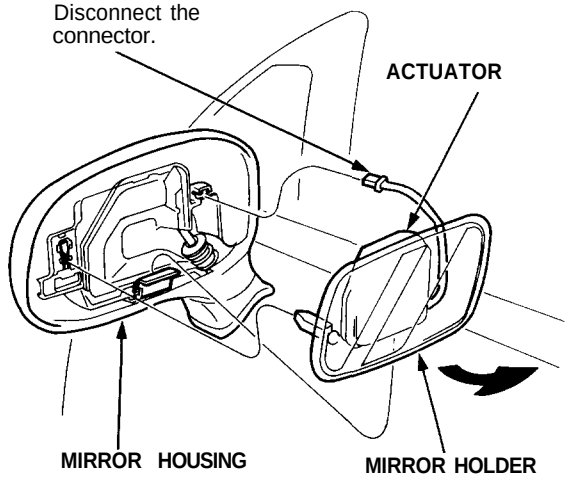

3. Remove the actuator (see section 23).
4. Installation is the reverse of the removal procedure.

Front and Center Pillar Retainer/Upper Weatherstrip/ Center Pillar Panel

Replacement

Disassemble in numbered sequence.

CAUTION: Wear gloves to remove and install the retainer.

NOTE:
- Check the upper weatherstrip for damage and deterioration, and replace it if necessary.
- Take care not to bend the front and center pillar retainer.
- After installing the upper weatherstrip, check for water leaks.
- If necessary: Adjust the position of the door glass (see page 20-14).
- If necessary: Replace any damaged clips.

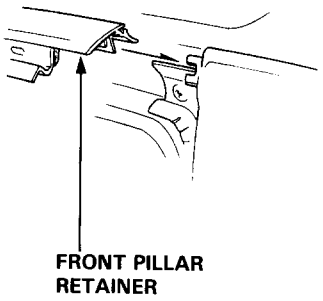

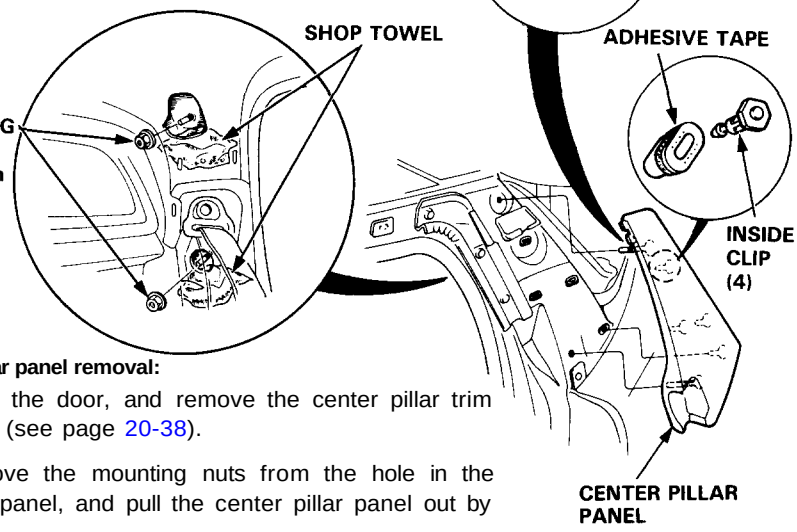

Center pillar panel removal:

1. Open the door, and remove the center pillar trim panel (see page 20-38).
2. Remove the mounting nuts from the hole in the body panel, and pull the center pillar panel out by hand.

   NOTE: Do not drop the mounting nuts inside the body panel.

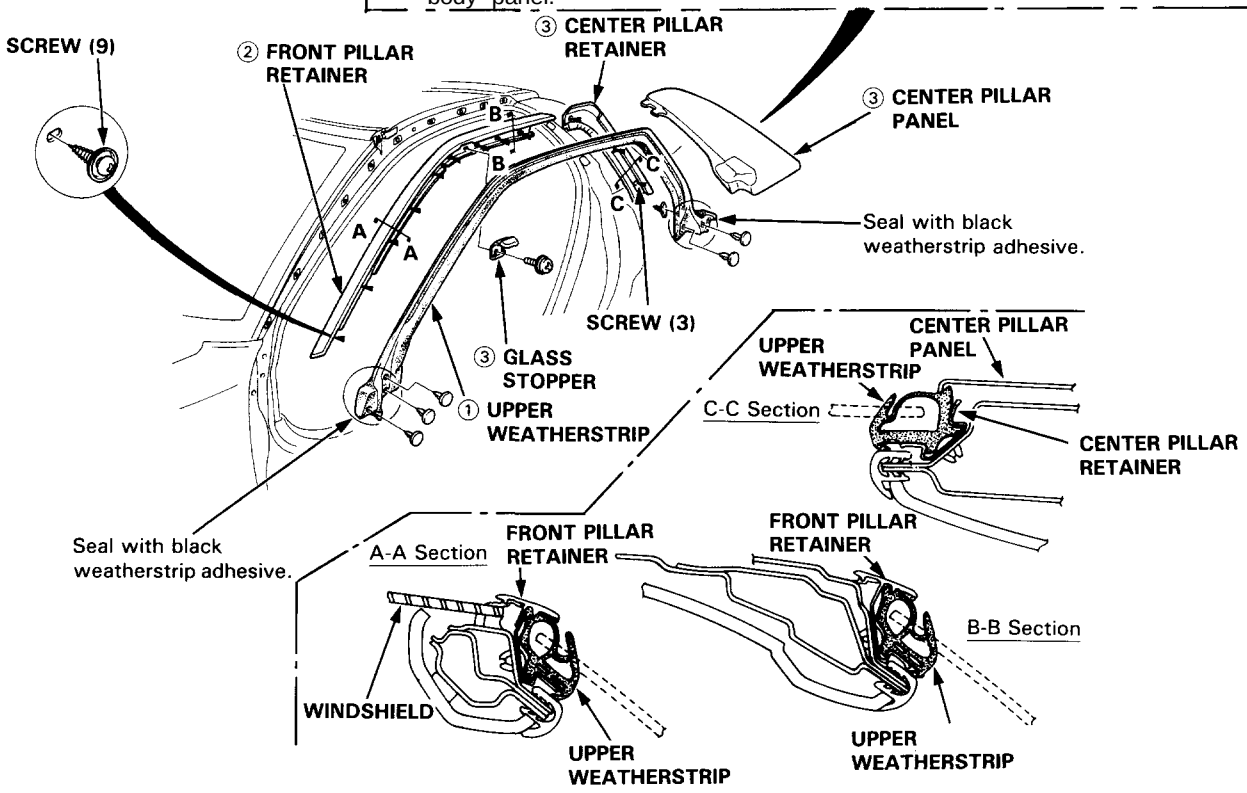

Windshield, Rear Window, Rear Hatch Glass

Index

( ): Quantity of parts used.

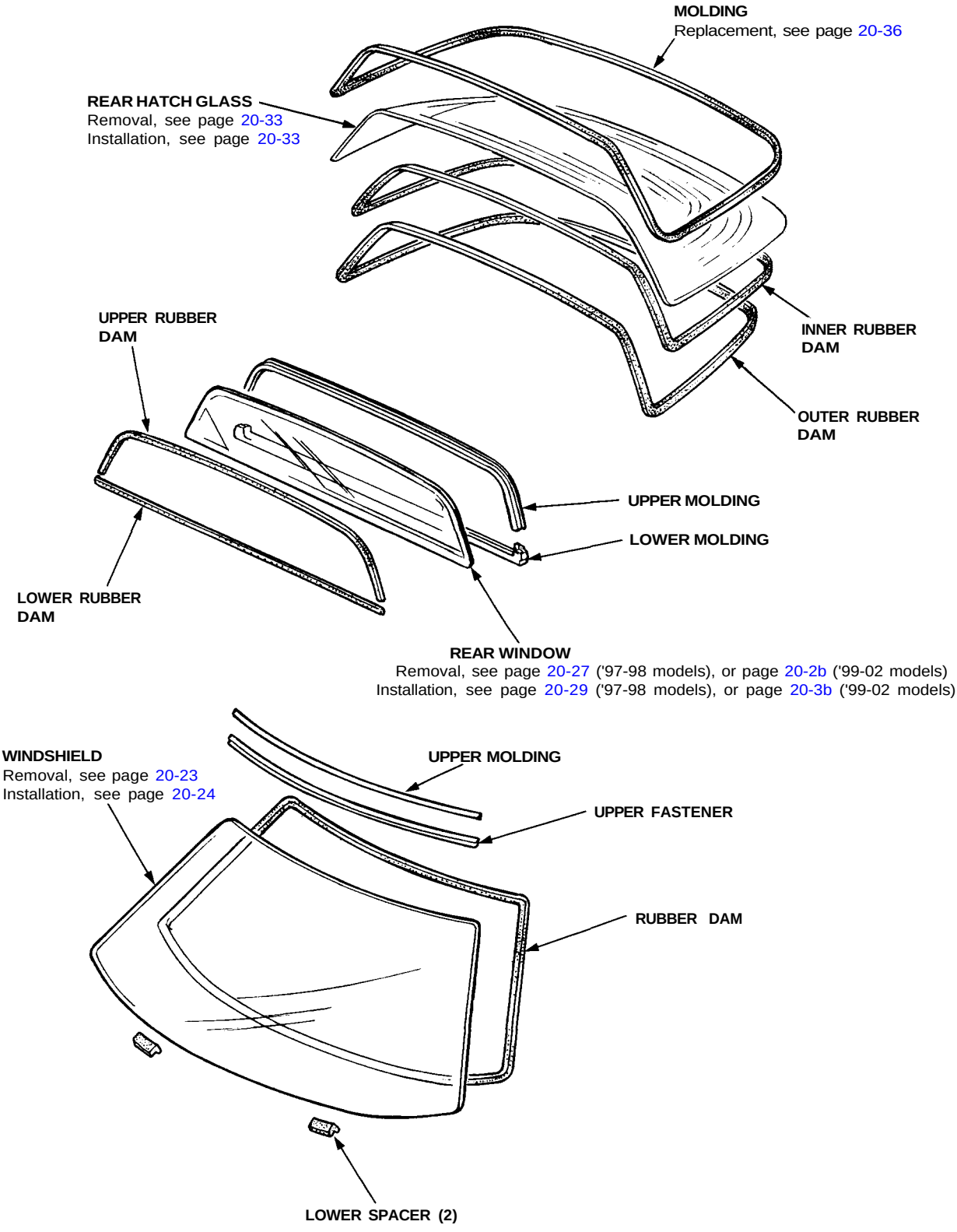

Windshield

Removal

CAUTION:
- **Wear gloves to remove and install the windshield.**
- **Use covers to avoid damaging any surfaces.**

1. To remove the windshield, first remove the:
   - Seats (see page 20-39)
   - Rearview mirror (see page 20-46)
   - Sunvisors (see page 20-38)
   - Front pillar retainer (see page 20-21)
   - Front wiper and air scoop (see section 23)
   - Front pillar trim and headliner (see page 20-38)

2. Peel off the upper molding.

3. Apply protective tape along the edge of the dashboard and body next to the windshield as shown.

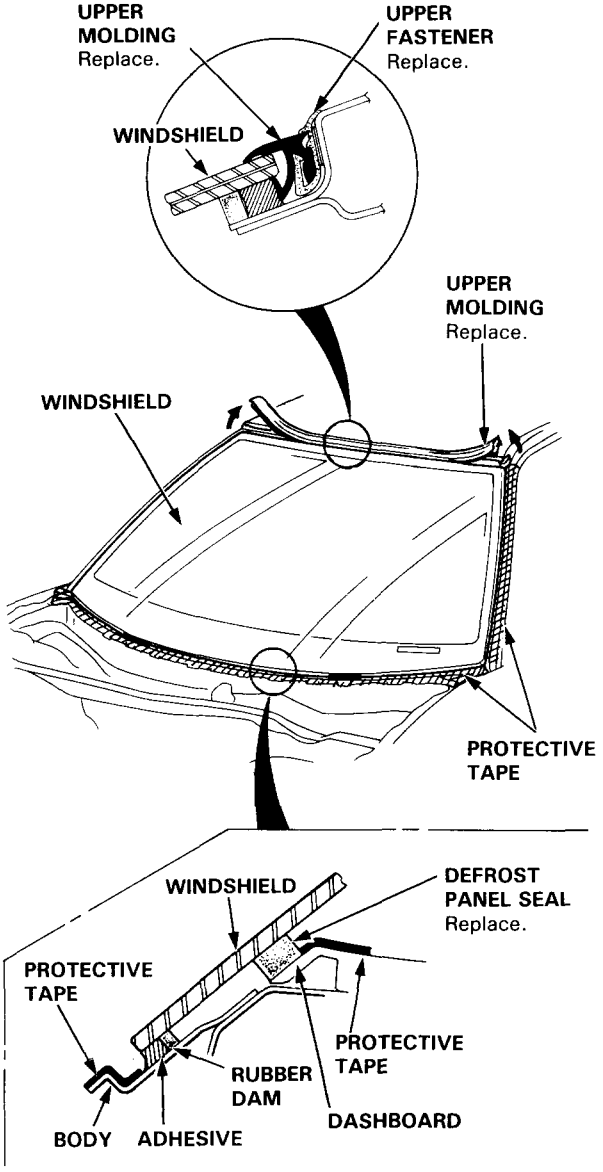

4. Using an awl, make a hole through the adhesive from inside the car. Push piano wire through the hole, and wrap each end around a piece of wood.

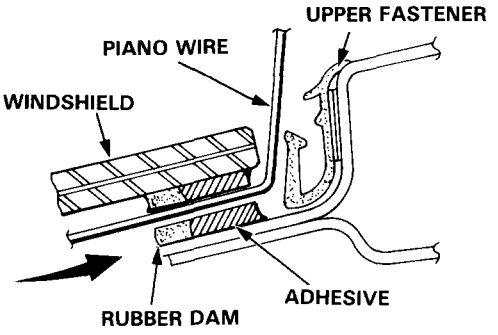

5. With a helper on the outside, pull the piano wire back and forth in a sawing motion and carefully cut through the adhesive around the entire windshield.

   CAUTION:
   - **Hold the piano wire as close to the windshield as possible to prevent damage to the body and dashboard.**
   - **Take care not to damage the vehicle identification number plate.**

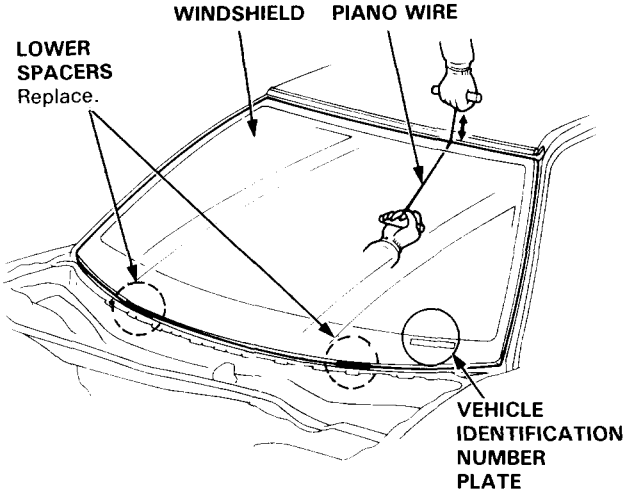

6. Cut the lower spacers and upper fastener away from the body with a knife; they are cemented in place.

   NOTE: Replace the lower spacers with new ones whenever the windshield has been removed.

Windshield

Installation

1. Scrape the old adhesive smooth with a knife to a thickness of about 2 mm (0.08 in) on the bonding surface around the entire windshield flange.

   NOTE:
   - Do not scrape down to the painted surface of the body; damaged paint will interfere with proper bonding.
   - Remove all traces of the lower spacer material from the body.
   - Mask off surrounding surfaces before painting.

2. Clean the body bonding surface with a sponge dampened in alcohol.

   NOTE: After cleaning, keep oil, grease or water from getting on the surface.

3. If the old windshield is to be reinstalled, use a putty knife to scrape off all traces of old adhesive, then clean the windshield surface with alcohol where new adhesive is to be applied.

   NOTE: Make sure the bonding surface is kept free of water, oil and grease.

   CAUTION: Avoid setting the windshield on its edges; small chips may later develop into cracks.

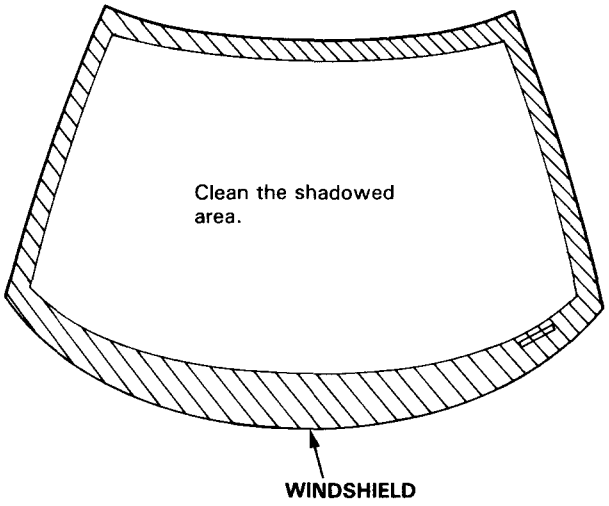

4. Glue the lower spacers and defrost panel seals in place as shown.

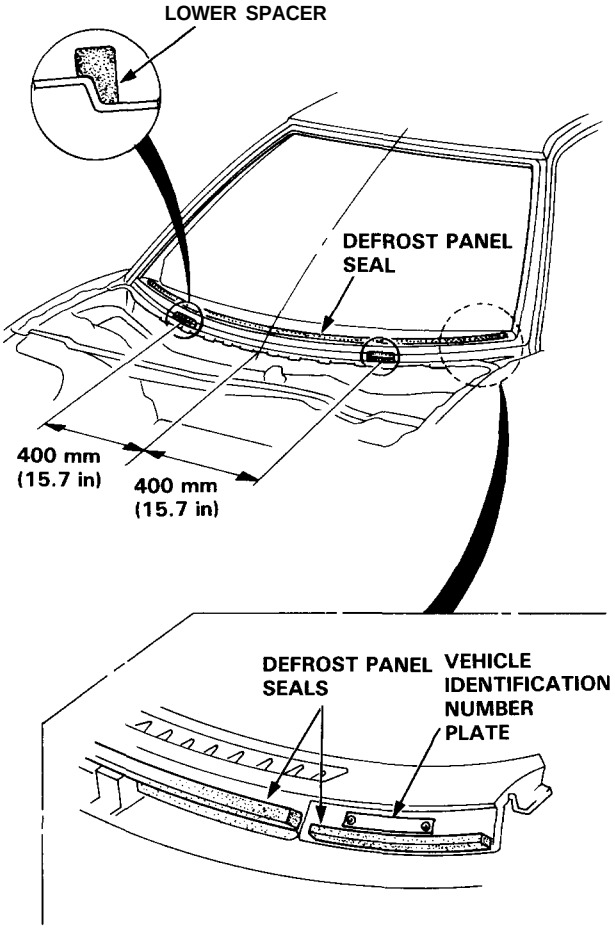

5. Set the windshield upright on the lower spacers, then center it in the opening. Make alignment marks by marking lines across the windshield and body with a grease pencil at the four points shown.

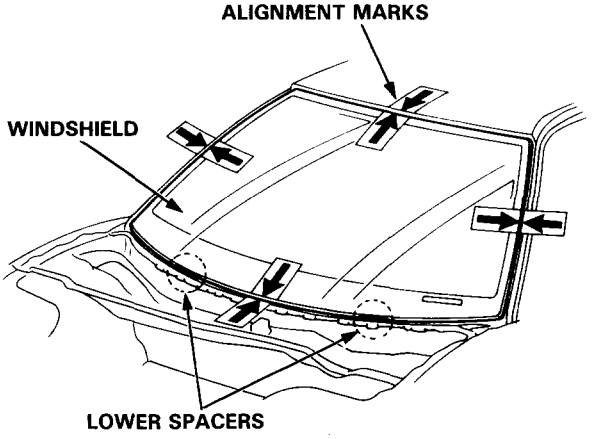

6. Glue the rubber dam to the inside face of the windshield, as shown, to contain the adhesive during installation.

NOTE: Be careful not to touch the windshield where adhesive will be applied.

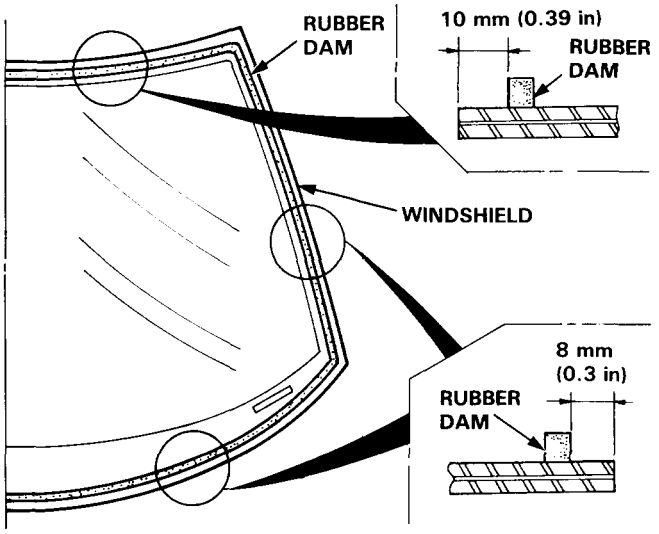

7. With a sponge, apply a light coat of glass primer around the edge of the windshield as shown, then lightly wipe it off with gauze or cheesecloth.

NOTE:
- Do not apply body primer to the windshield, and do not get body and glass primer sponges mixed up.
- Never touch the primed surfaces with your hands. If you do, the adhesive may not bond to the windshield properly, causing a leak after the windshield is installed.
- Keep water, dust, and abrasive materials away from the primed surface.

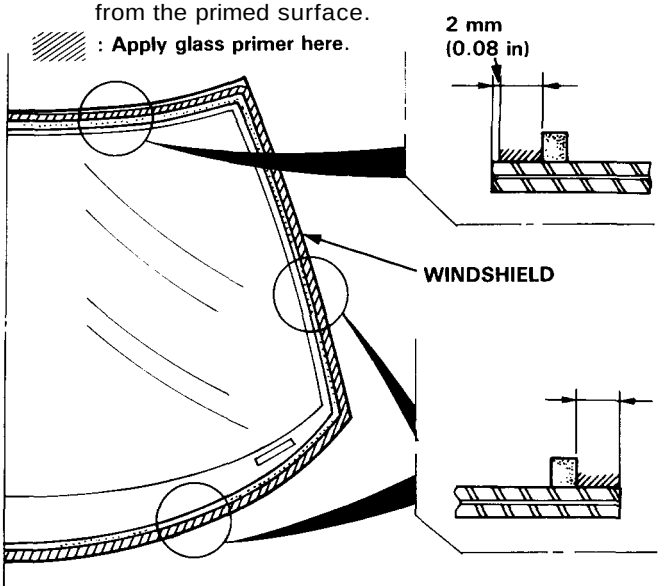

8. Thoroughly mix all the adhesive and hardener together on a glass or metal plate with a putty knife.

NOTE:
- Clean the plate with a sponge and alcohol before mixing.
- Follow the instructions that come with the adhesive.

9. Before filling a cartridge, cut the end of the nozzle as shown.

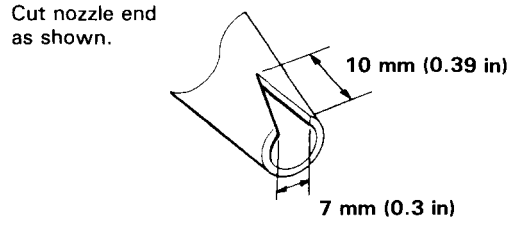

10. Pack adhesive into the cartridge without air pockets to ensure continuous delivery. Put the cartridge in a caulking gun, and run a bead of adhesive around the edge of the windshield as shown.

NOTE: Apply the adhesive within thirty minutes after applying the glass primer.

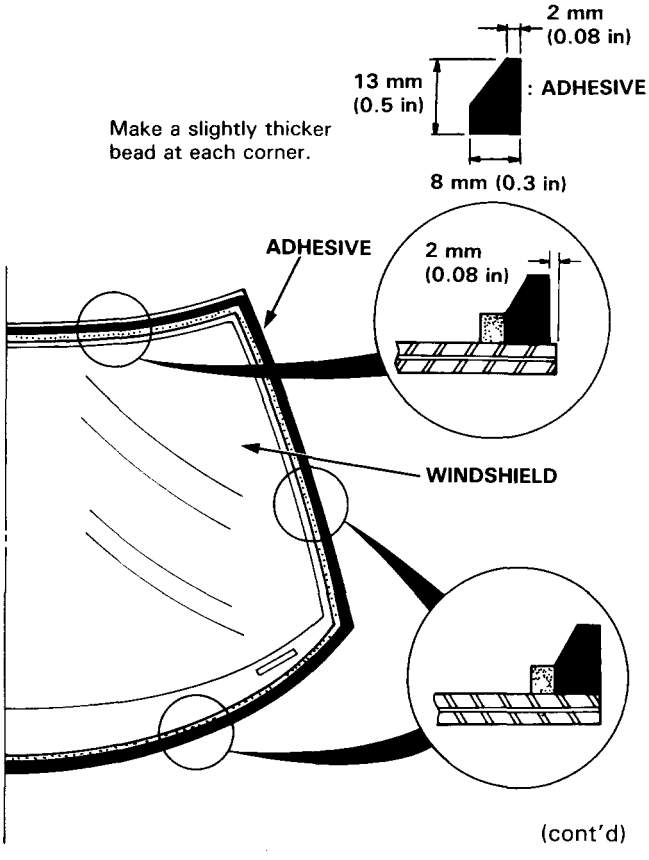

(cont'd)

Windshield

Installation (cont'd)

11. With a sponge, apply a light coat of body primer to the original adhesive remaining around the windshield flange. The windshield should be installed 10 minutes after you apply the primer.

NOTE:
- Do not apply glass primer to the body, and be careful not to mix up glass and body primer sponges.
- Never touch the primed surfaces with your hands.
- Mask off the dashboard before painting the flange.

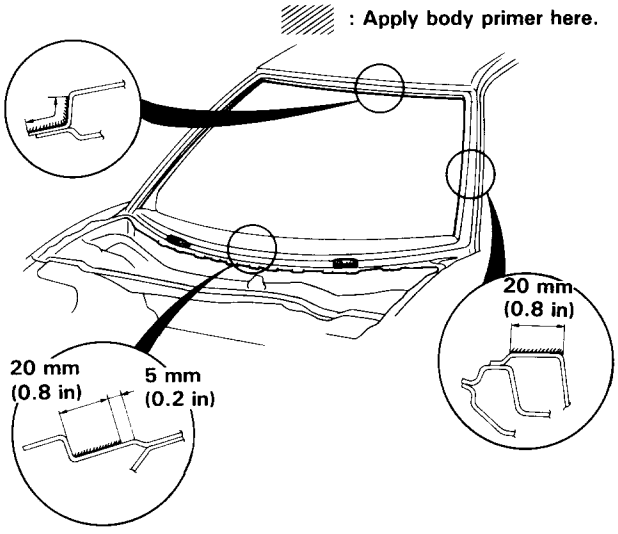

12. Glue the upper fastener to the body as shown.

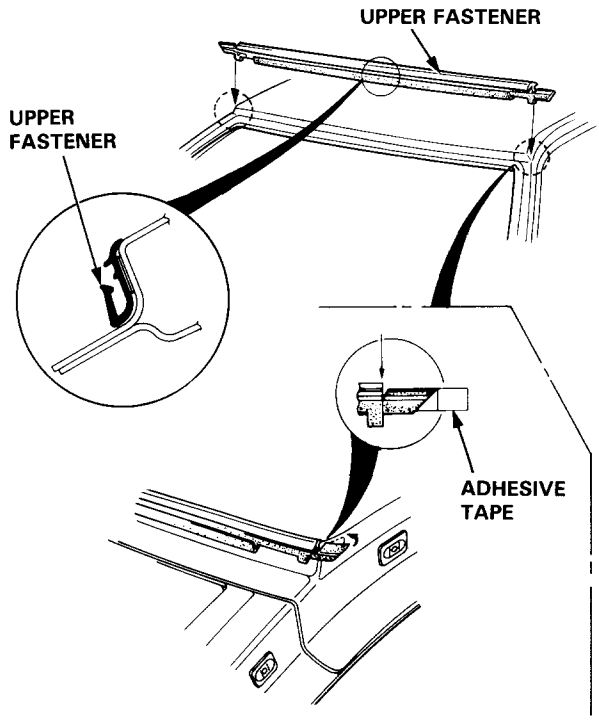

13. Use suction cups to hold the windshield over the opening, align it with the alignment marks made in step 5 and set it down on the adhesive. Lightly push on the windshield until its edges are fully seated on the adhesive all the way around.

NOTE: Do not close or open the doors until the adhesive is dry.

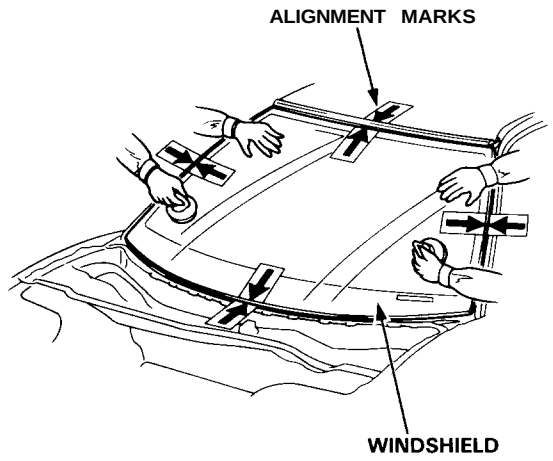

14. Install the upper molding.

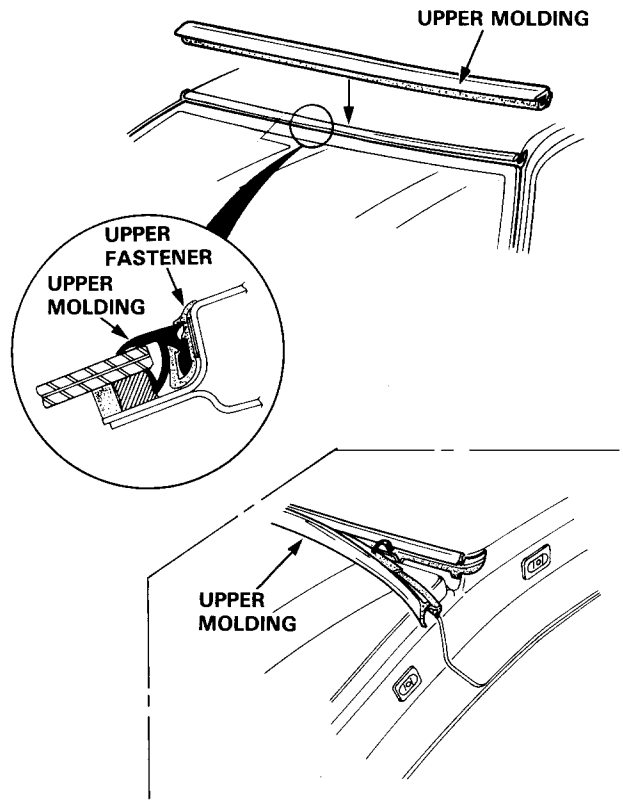

15. Let the adhesive dry for at least one hour, then spray water over the windshield and check for leaks. Mark leaking areas and let the windshield dry, then seal with urethane windshield adhesive.

    NOTE:
    - Let the car stand for at least four hours after windshield installation. If the car has to be used within the first four hours, it must be driven slowly.
    - Keep the windshield dry within the first hour after installation.
    - Check that the ends of the front pillar retainer are set under the air scoop.

16. Reassemble all removed parts.

Rear Window

Removal

CAUTION:
- **Wear gloves to remove and install the rear window.**
- **Since the rear window is double glazed glass with the inner glass (interior-side) larger than the outer glass, care should be taken not to damage the edge of the inner glass when removing the outer glass.**

1. To remove the rear window, first remove:
   - Seats (see page 20-39)
   - Center pillar trim panel (see page 20-38)
   - Rear upper trim panel (see page 20-38)
   - Rear hatch assembly (see page 20-64)

2. Remove the weatherstrip.

3. Disconnect the rear defogger sub-harness and ground cable/antenna lead, then remove the grommets.

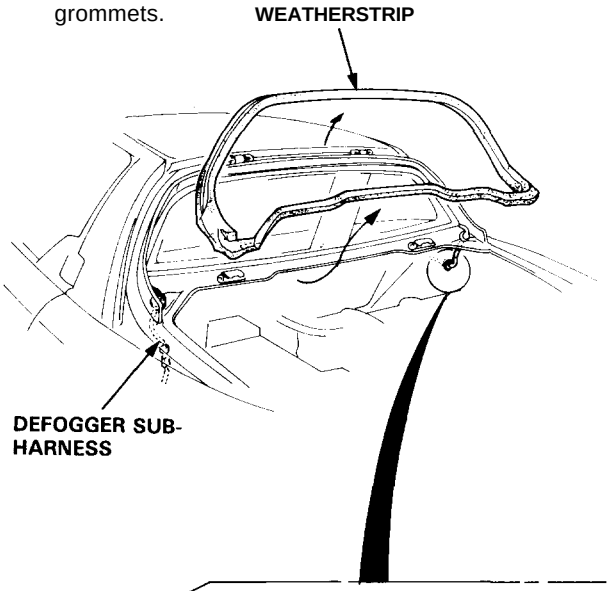

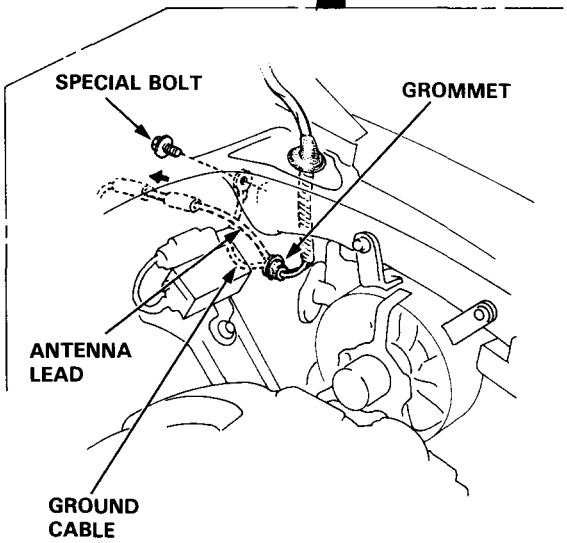

(cont'd)

Removal(cont'd)

4. Remove the rear defogger sub-harness and ground cable/antenna lead from the upper molding.

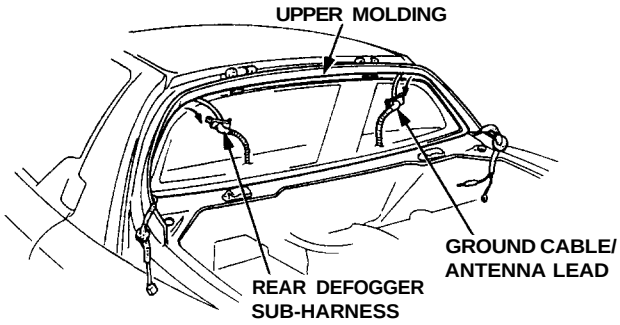

5. Use a knife to cut the upper and lower moldings from outside the car, all the way around.

CAUTION: Take care not to scratch or score the rear window and body.

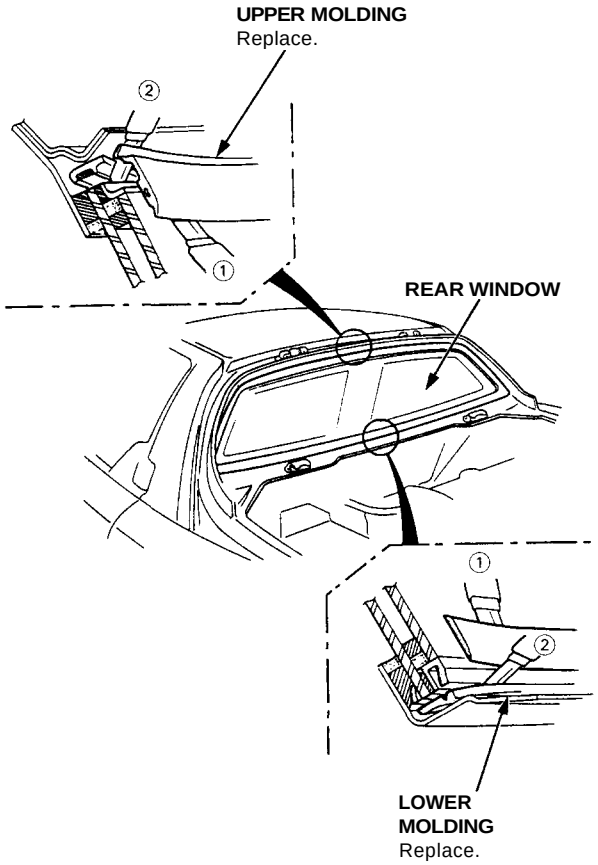

NOTE: Cut the outer side rubber portion ① off the molding, then cut the top rubber portion ② .

6. Apply protective tape along the edge of the body.

7. Using an awl, make a hole through the adhesive from inside the car. Push piano wire through the hole, and wrap each end around a piece of wood.

8. Pull the piano wire back and forth in a sawing motion, and carefully cut through the adhesive around the entire rear window.

CAUTION: Hold the piano wire as close to the rear window as possible to prevent damage to the body.

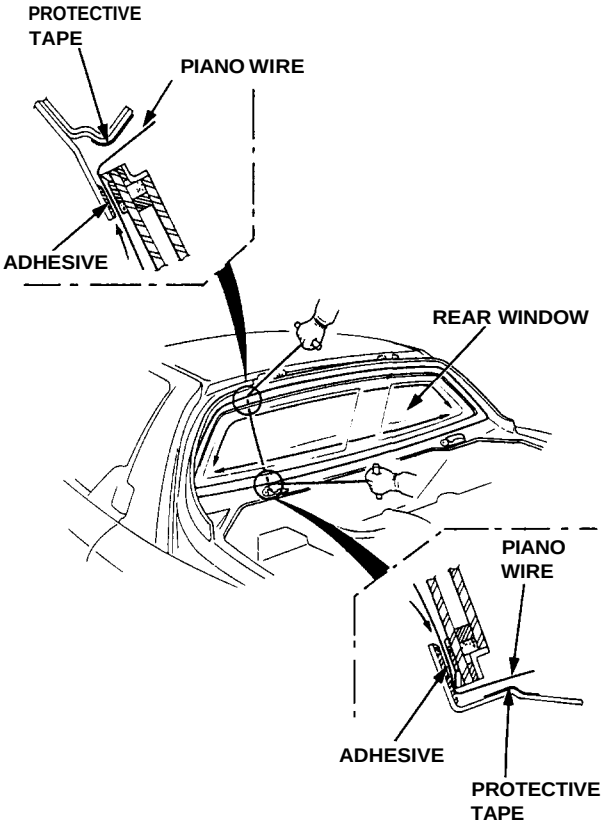

Installation

1. Scrape old adhesive smooth with a knife to a thickness of about 2 mm (0.08 in) on the bonding surface around the entire rear window flange.

   NOTE:
   - Do not scrape down to the painted surface of the body; damaged paint will interfere with proper bonding.
   - Mask off surrounding surfaces before applying primer.

2. Clean the body bonding surface with a sponge dampened in alcohol.

   NOTE: After cleaning, keep oil, grease or water from getting on the surface.

3. If the old rear window is to be reinstalled, use a putty knife to scrape off all traces of old adhesive, then clean the rear window surface with alcohol where new adhesive is to be applied.

   NOTE: Make sure the bonding surface is kept free of water, oil and grease.

   CAUTION: Avoid setting the rear window on its edges; small chips may later develop into cracks.

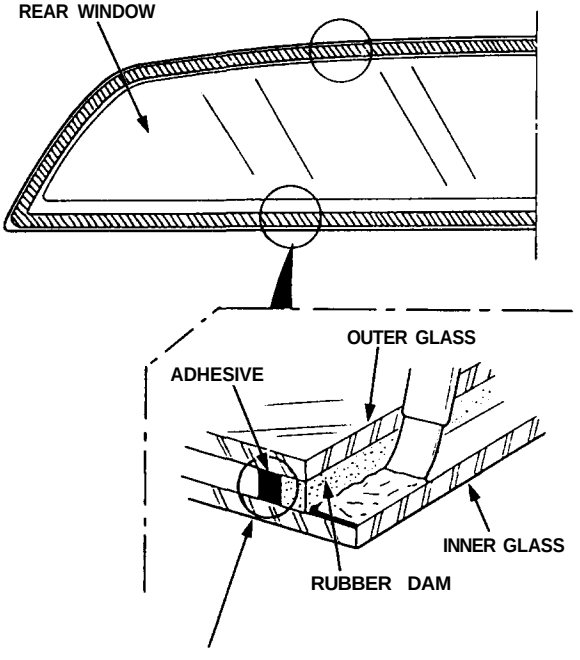

   NOTE: Be careful not to cut the adhesive and rubber dam between the inner glass and outer glass.

4. Clean the rear window surface with alcohol where the new moldings are to be installed.

   NOTE: Make sure the surface is kept free of water, oil and grease.

5. With a brush, apply a light coat of glass primer around the edge of the rear window.

   NOTE: Scrape off excess glass primer with a putty knife after installing the new moldings.

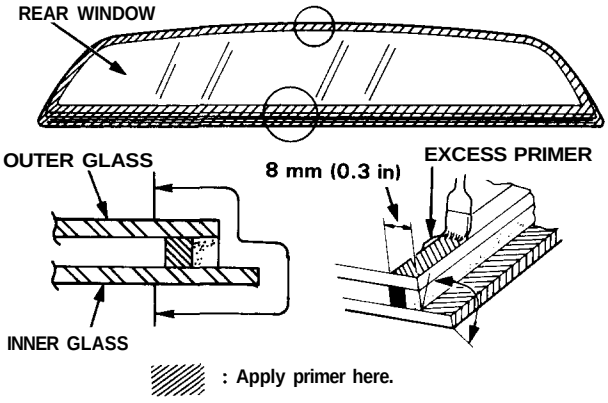

6. Degrease the inner surfaces of the new upper and lower moldings thoroughly, then apply a light coat of glass primer to the surfaces.

   NOTE:
   - Apply glass primer around the entire groove of the new upper and lower moldings.
   - Do not apply glass primer to the outer surface.

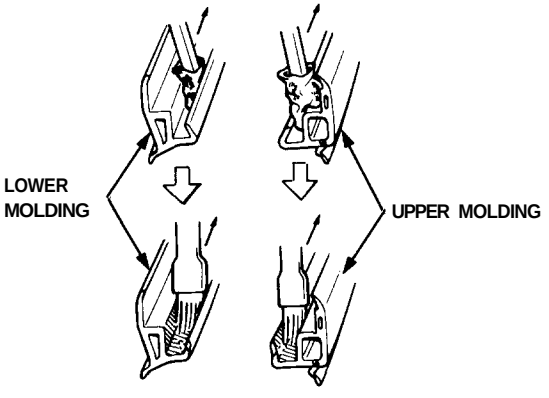

7. Run a bead of adhesive in the upper and lower molding grooves.

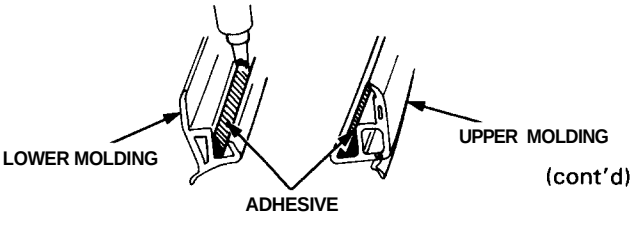

(cont'd)

Rear Window

Installation (cont'd)

8. Press the upper and lower moldings into position around the entire edge of the rear window.

   NOTE: Check that the upper and lower moldings are not wrinkled or lifted away at the corners.

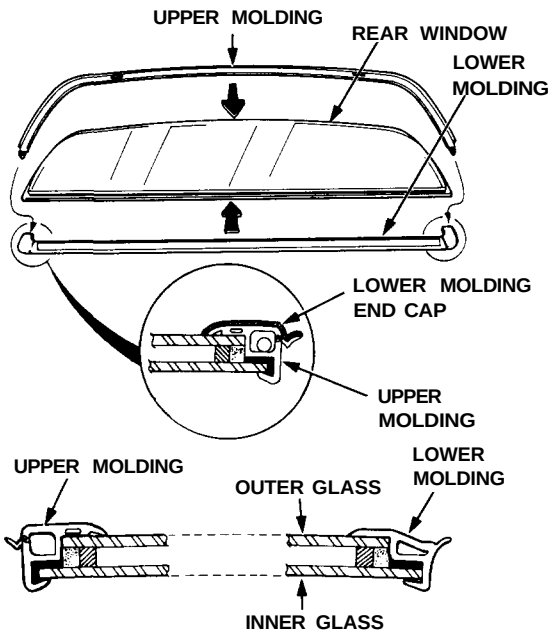

9. Scrape or wipe the excess adhesive off with a putty knife or towel.

   NOTE: Use a soft shop towel dampened with alcohol to remove adhesive from the rear window or upper and lower moldings.

10. After the adhesive is dry, install the rear defogger sub-harness and ground cable/antenna lead in the upper molding.

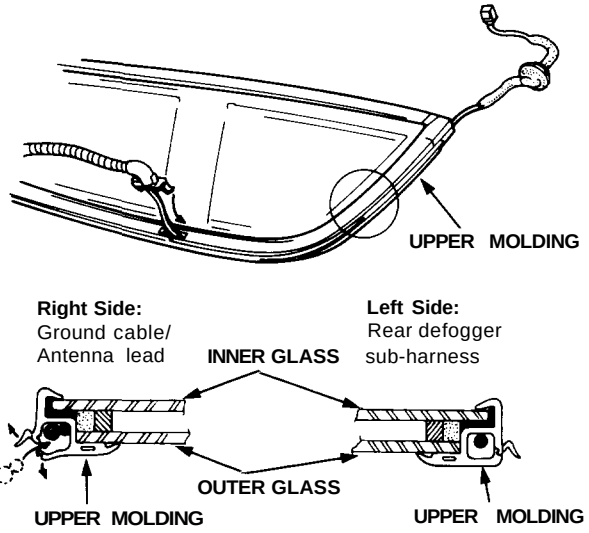

11. Set the rear window upright on the body, then center it in the opening. Make alignment marks by marking lines across the rear window and body with a grease pencil at the four points shown.

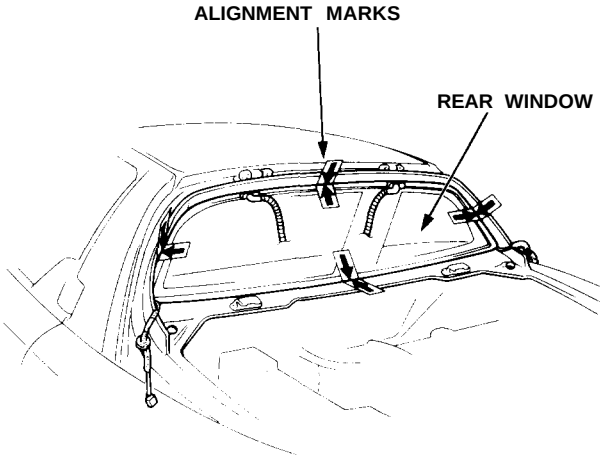

12. Glue the upper and lower rubber dams to the inside face of the rear window, as shown, to contain the adhesive during installation.

    NOTE: Be careful not to touch the inner glass where adhesive will be applied.

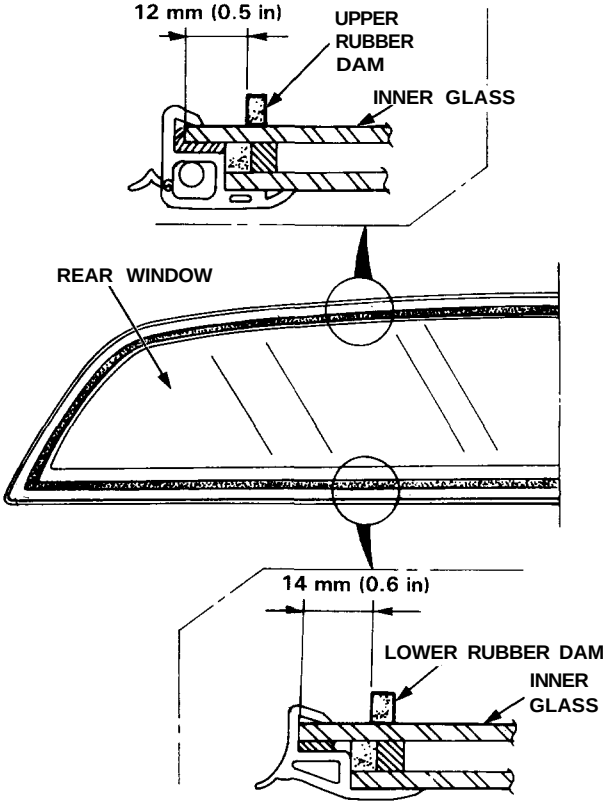

13. With a sponge, apply a light coat of glass primer around the edge of the rear window as shown, then lightly wipe it off with gauze or cheesecloth.

NOTE:
- Do not apply body primer to the rear window, and do not get body and glass primer sponges mixed up.
- Never touch the primed surfaces with your hands. If you do, the adhesive may not bond to the inner glass properly, causing a leak after the rear window is installed.
- Keep water, dust, and abrasive materials away from the primed surface.

: **Apply glass primer here.**

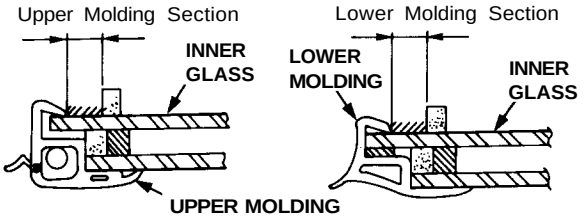

14. With a sponge, apply a light coat of body primer to the original adhesive remaining around the rear window opening flange.

NOTE:
- Do not apply body primer to the rear window, and do not get body and glass primer sponges mixed up.
- Never touch the primed surfaces with your hands.

: **Apply body primer here.**

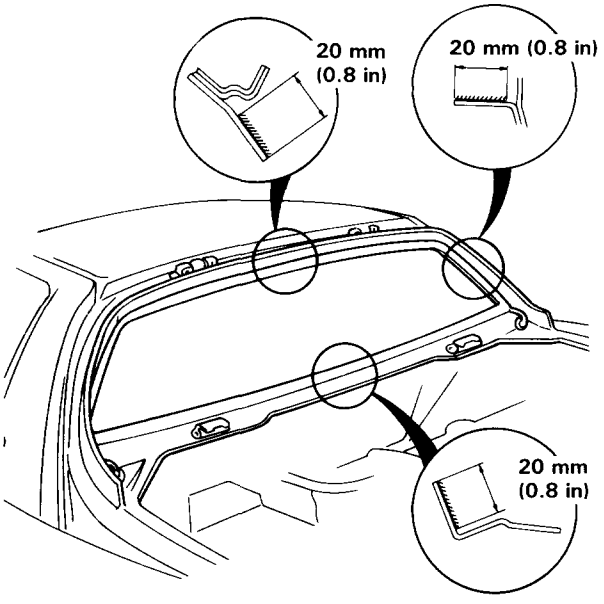

15. Thoroughly mix the adhesive and hardener together on a glass or metal plate with a putty knife.

NOTE:
- Clean the plate with a sponge and alcohol before mixing.
- Follow the instructions that came with the adhesive.

16. Before filling a cartridge, cut the end of the nozzle as shown.

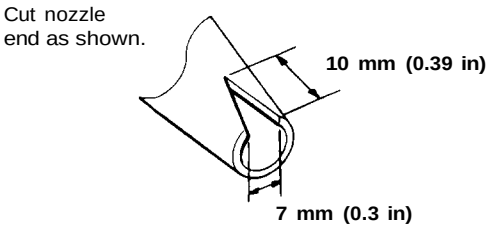

17. Pack adhesive into the cartridge without air pockets to ensure continuous delivery. Put the cartridge in a calking gun, and run a bead of adhesive around the edge of the rear window as shown.

NOTE: Apply the adhesive within thirty minutes after applying the glass primer.

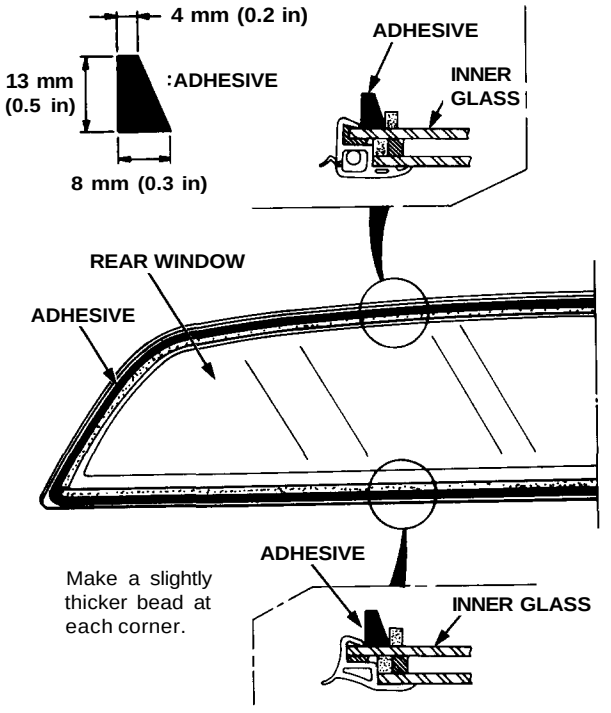

(cont'd)

Rear Window

Installation (cont'd)

18. Use suction cups to hold the rear window over the opening, align it with the alignment marks made in step 11 and set it down on the adhesive. Lightly push on the rear window until its edges are fully seated on the adhesive all the way around.

    NOTE: Do not close or open the doors until the adhesive is dry.

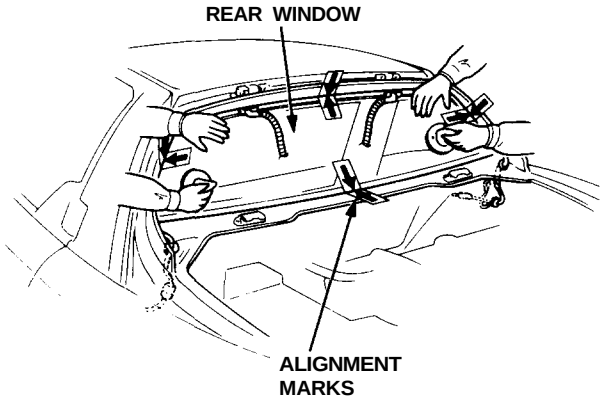

19. After the adhesive is dry, spray water over the rear window and check for leaks. Mark leaking areas and let the rear window dry, then seal with sealant.

    NOTE: Let the car stand for at least four hours after rear window installation. If the car has to be used within the first four hours, it must be driven slowly.

20. Connect the rear defogger sub-harness and ground cable/antenna lead, then install the grommets.

21. Reinstall all remaining removed parts.

Rear Hatch Glass

Removal

CAUTION:
- **Use covers to avoid damaging the body.**
- **Wear gloves to remove and install the glass.**
- **Do not damage the defroster grid lines.**
- **Take care not scratch or score the molding.**

1. Remove the rear hatch assembly from the body (see page 20-64).

2. Using an awl, make a hole through the adhesive and outer/inner rubber dams from the inside, at the top of the glass. Push piano wire through the hole, and wrap each end around a piece of wood.

3. Apply the protective tape along the edge of the rear hatch frame as shown.

4. With a helper holding the glass, pull the piano wire back and forth in a sawing motion and carefully cut through the adhesive along the top and the sides of the glass.

   CAUTION: Hold the piano wire as close to the glass as possible to prevent damage to the rear hatch frame.

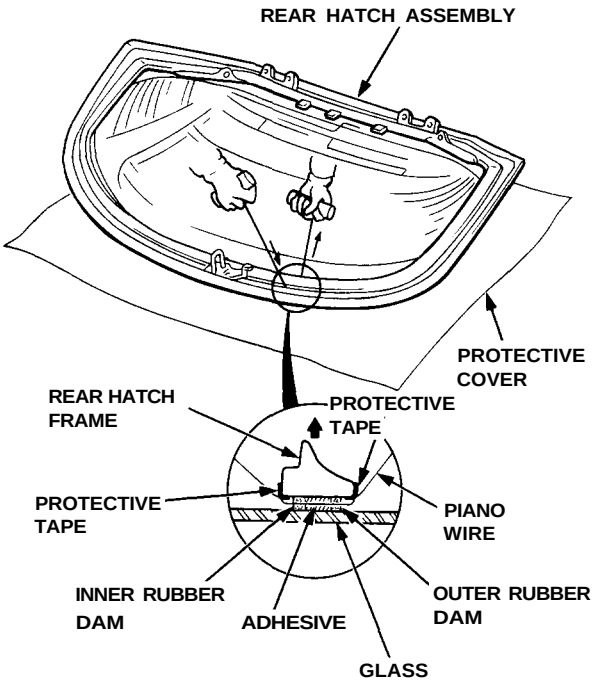

Rear Hatch Glass

Installation

NOTE:
- Do not scrape down to the painted surface of the hatch frame; damaged paint will interfere with proper bonding.
- Mask off surrounding surfaces before painting.

1. Use a putty knife to scrape off all traces of old adhesive and outer/inner rubber dams, then clean the rear hatch frame and glass (new) surface with alcohol where new adhesive is to be applied.

   NOTE: Make sure the bonding surface is kept free of water, oil and grease.

   CAUTION: Avoid setting the glass on its edges; small chips may later develop into cracks.

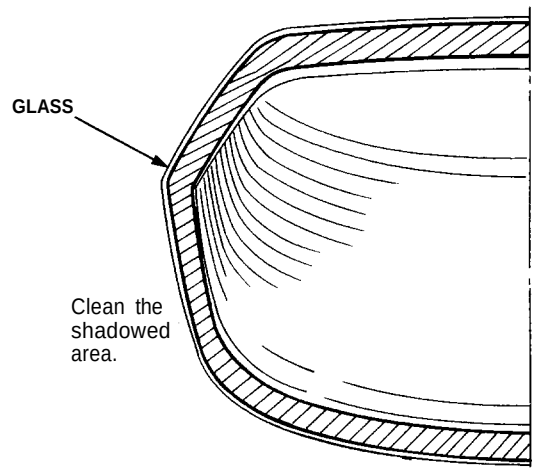

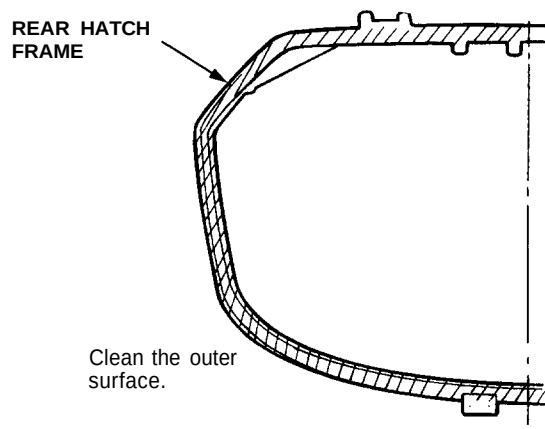

(cont'd)

Rear Hatch Glass

Installation(cont'd)

2. Install the rear hatch frame, and adjust it fit to the weatherstrip and engine cover seal.

   NOTE: Do not install the support struts.

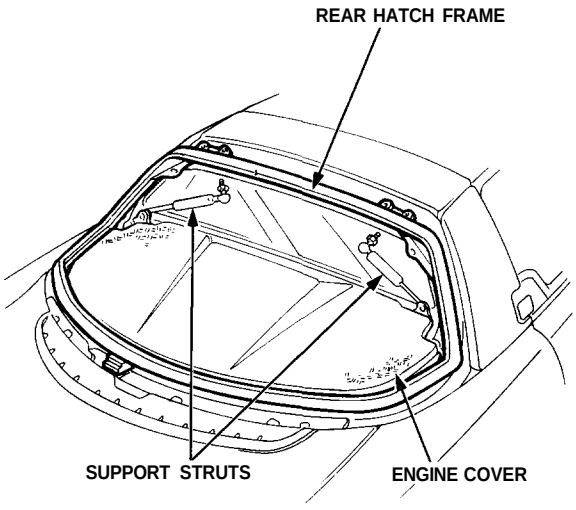

3. Glue the outer and inner rubber dams to the inside face of the glass, as shown, to contain the adhesive during installation.

   NOTE:
   - Align the center of the gluing surface with the printed dots.
   - Be careful not to touch the glass where adhesive will be applied.
   - Mask off surrounding surfaces before applying primer.

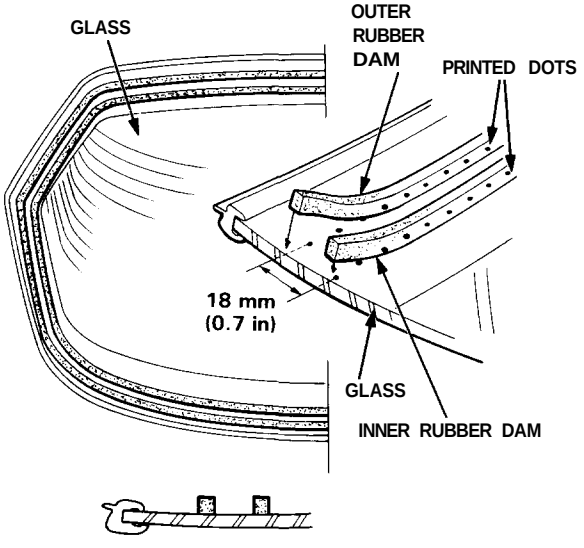

4. Place the glass gently on the rear hatch frame, then center it in the opening. Make alignment marks by marking lines across the glass and body with a grease pencil at the four points shown.

   NOTE: Put several spacers between glass and rear hatch air scoop to prevent the glass from sliding down.

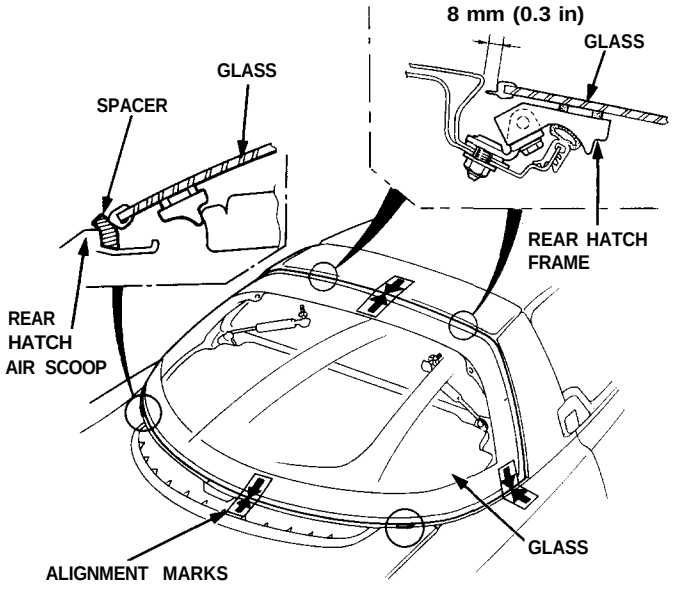

5. With a brush, apply a light coat of glass primer to the glass as shown, then lightly wipe it off with gauze or cheesecloth.

   NOTE:
   - Do not apply body primer to the glass, and do not get body and glass primer brushes mixed up.
   - Never touch the primed surfaces with your hands. If you do, the adhesive may not bond to the glass properly, causing a leak after the glass is installed.
   - Keep water, dust, and abrasive materials away from the primed surface.

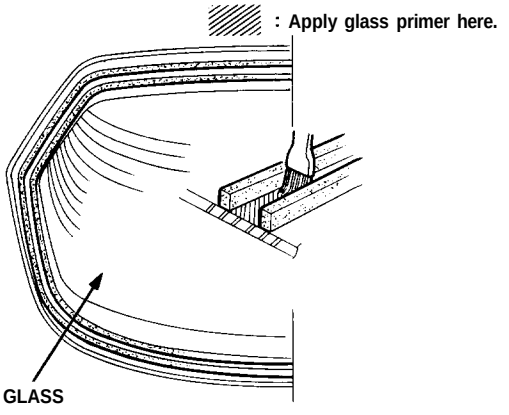

6. With a brush, apply a light coat of body primer to the original adhesive remaining around the rear hatch frame.

NOTE:
- Make sure the surface is kept free of water, oil and grease.
- Do not apply glass primer to the body, and be careful not to mix up glass and body primer brushes.
- Never touch the primed surfaces with your hands.

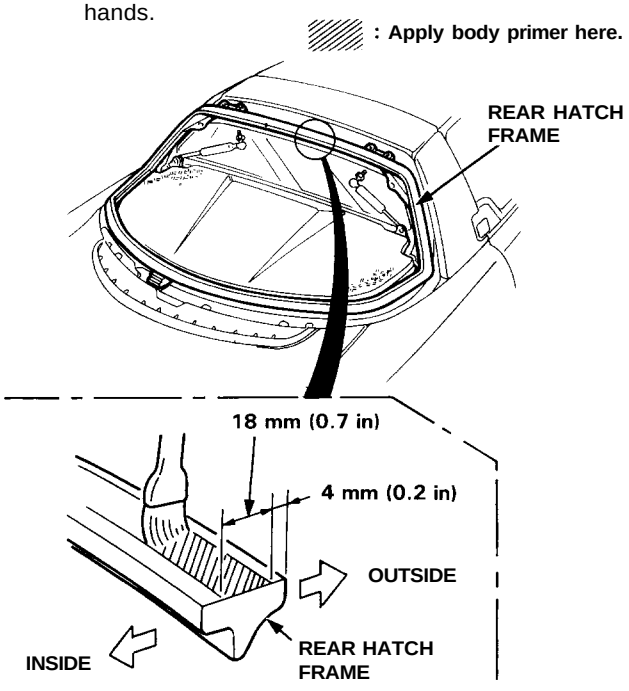

7. Thoroughly mix the adhesive and hardener together on a glass or metal plate.

NOTE:
- Clean the plate with a sponge and alcohol before mixing.
- Follow the instructions that came with the adhesive.

8. Before filling a cartridge, cut the end of the nozzle as shown.

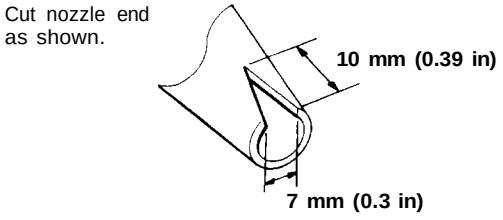

9. Pack adhesive into the cartridge without air pockets to ensure continuous delivery. Put the cartridge in a calking gun, and run a bead of adhesive around the edge of the glass as shown.

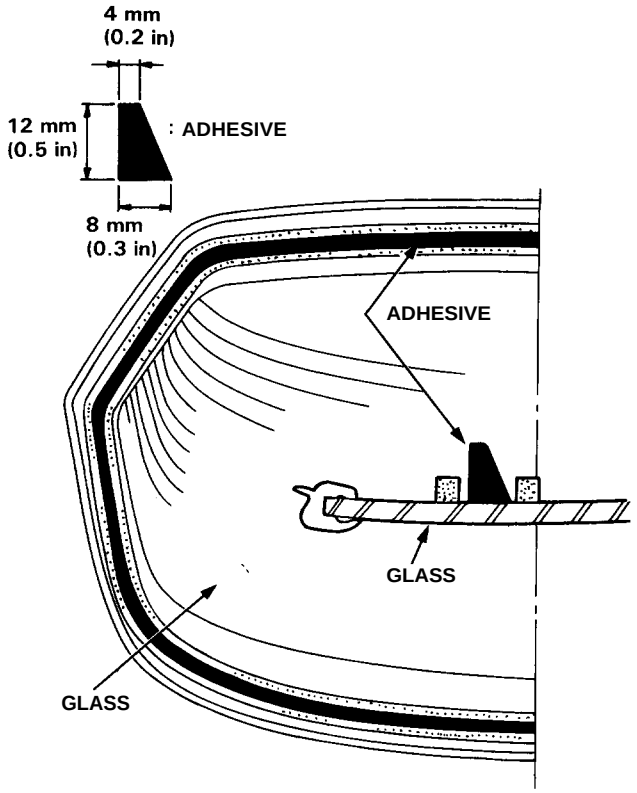

10. Use suction cups to hold the glass over the opening, align it with the alignment marks made in step 4 and set it down on the adhesive. Lightly push on the glass until its edges are fully seated on the adhesive all the way around.

NOTE: Do not open or close the doors until the adhesive is dry.

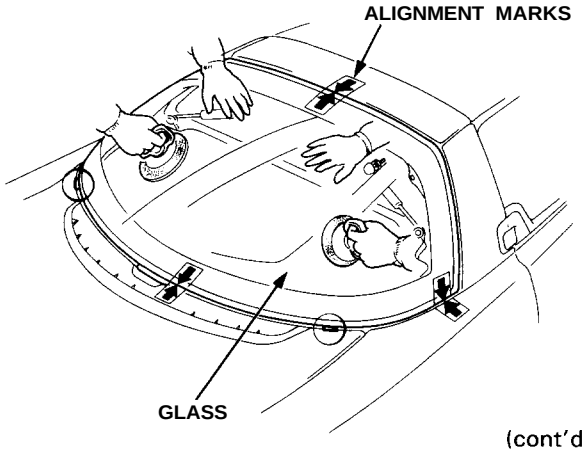

(cont'd)

Rear Hatch Glass

Installation (cont'd)

11. Scrape or wipe the excess adhesive off with a putty knife or towel.

    NOTE: Use a soft shop towel dampened with alcohol to remove adhesive from a painted surface or glass.

1 2. After the adhesive is dry, spray water over the glass and check for leaks. Mark leaking areas and let the glass dry, then seal with sealant.

    NOTE: Let the car stand for at least four hours after glass installation. If the car has to be used within the first four hours, it must be driven slowly.

13. Remove the spacers.

14. Install the support struts.

Rear Hatch Glass Molding

Replacement

CAUTION:
- **Wear gloves to replace the molding.**
- **Do not damage the glass and defroster grid lines.**

1. Remove the rear hatch assembly (see page 20-64).

2. Place the rear hatch assembly on its surface as shown.

   CAUTION: Avoid setting the glass on its edges; small chips may later develop into cracks.

3. With a helper holding the rear hatch assembly, carefully cut off the molding.

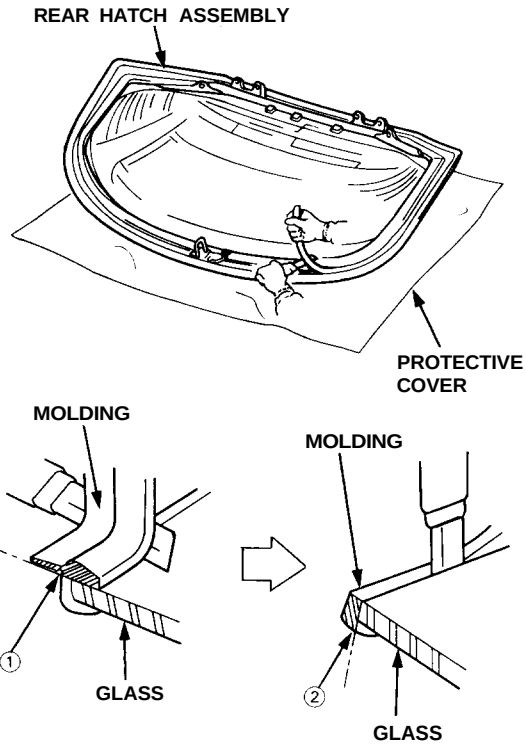

4. Turn the glass over, then cut the outer side rubber portion ③ of the molding.

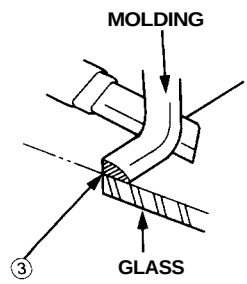

5. Scrape all traces of the old molding from the chamfered edges of the glass.

   NOTE: Be sure to scrape all traces of the old molding throughly.

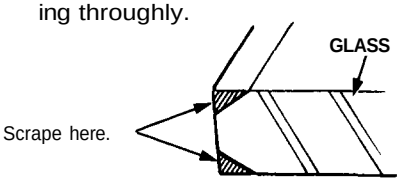

6. Clean the glass surface with alcohol where the new molding is to be installed.

   NOTE: Make sure the surface is kept free of water, oil and grease.

7. With a brush, apply a light coat of glass primer around the edge of the glass.

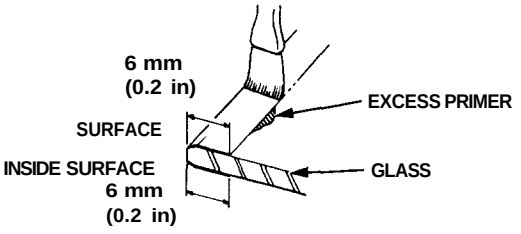

   NOTE: Scrape off excess glass primer with a putty knife after installing the new molding.

8. Degrease the inner surfaces of the new molding thoroughly, then apply a light coat of glass primer to the surfaces.

   NOTE:
   - Apply glass primer around the entire groove of the new molding.
   - Do not apply glass primer to the outer surface.

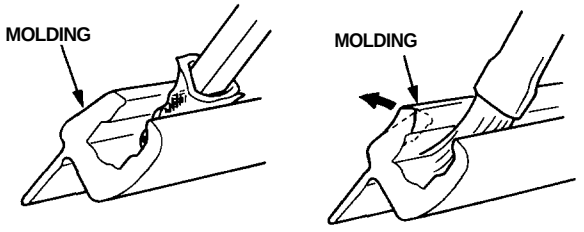

9. Run a bead of adhesive in the groove of the molding.

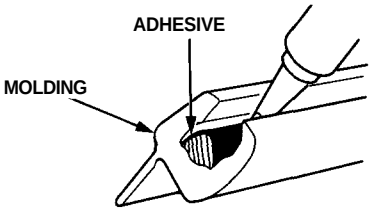

10. Press the molding into position around the entire edge of the glass.

    NOTE: Check that the molding is not wrinkled or lifted away at the corners.

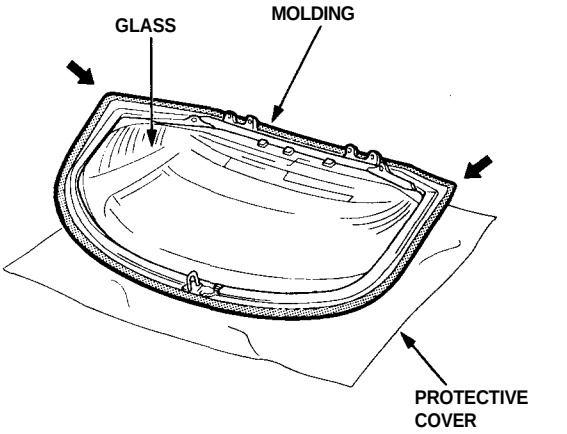

11. Scrape or wipe the excess adhesive off with a putty knife or towel.

    NOTE: Use a soft shop towel dampened with alcohol to remove adhesive from a painted surface or glass.

(Glass Surface)

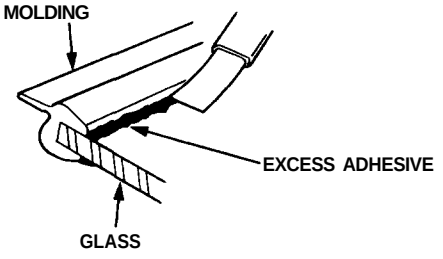

Inside:

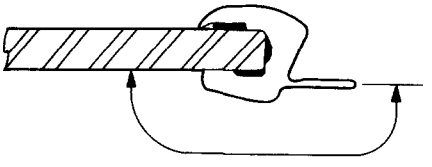

Surface to be wiped clean.

Outside:

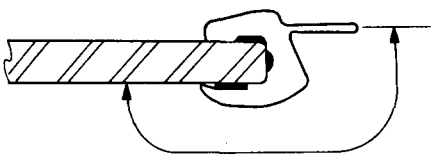

Headliner/Interior Trim

Replacement

To remove the headliner, first remove the:
- Sunvisors
- Center pillar trim panels
- Front pillar trim panels
- Seats (see page 20-39)
- Ceiling light (see section 23)

NOTE:
- When installing the headliner, be careful not to fold or bend it. Also, be careful not to scratch the body.
- Check that both sides of the headliner are securely attached to the trim.

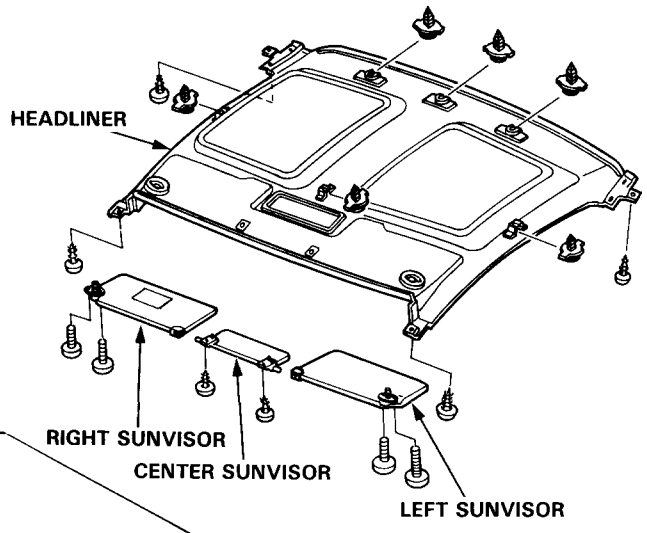

Disassemble in numbered sequence.

NOTE:
- When removing the rear trim panels, take care not to damage the control units and relays.
- Take care not to scratch the trim panels.

◌: **Clip Locations**

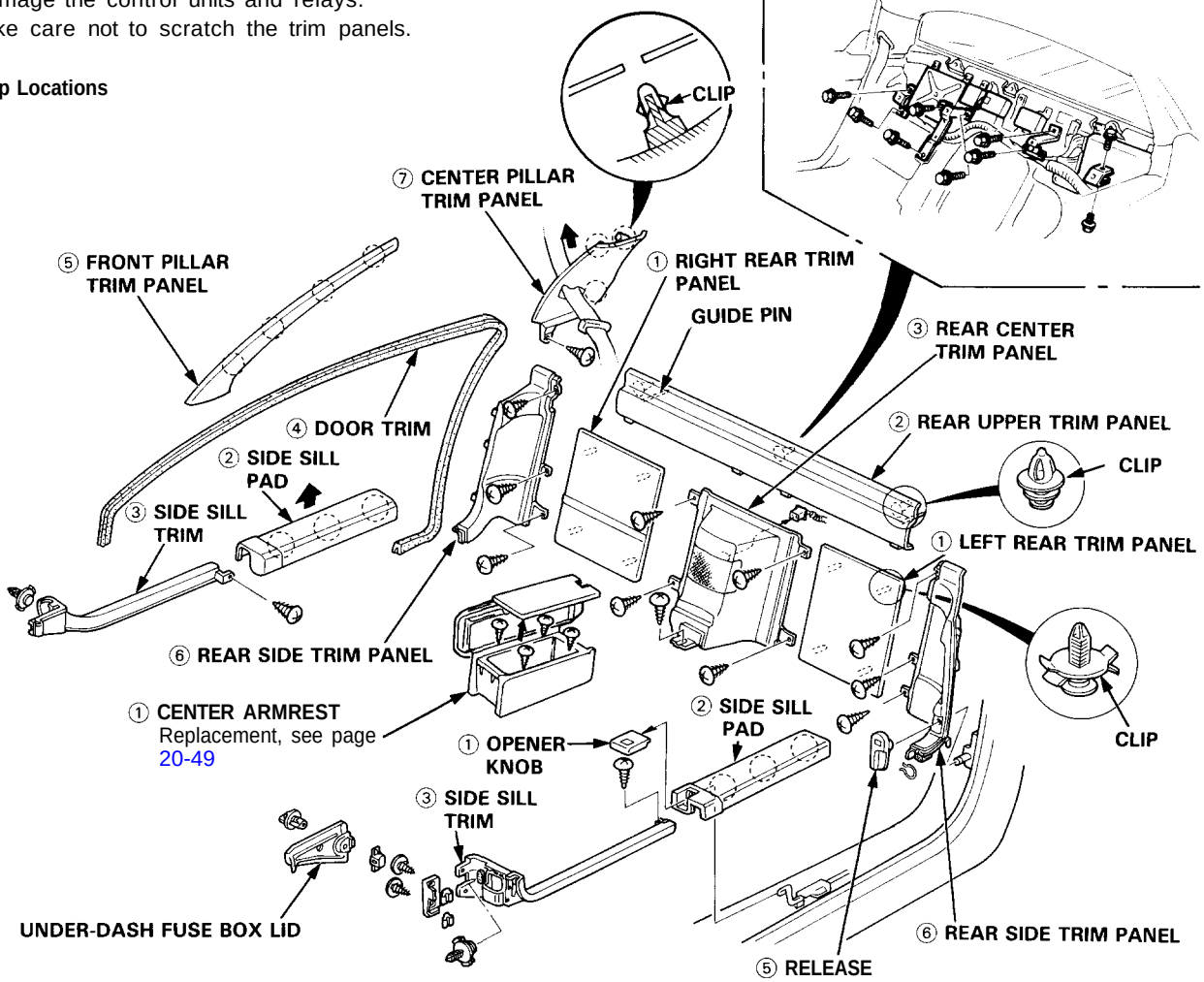

Installation is the reverse of the removal procedure.

NOTE: If necessary, replace any damaged clips.

Seats

Replacement

NOTE:
- Before removing the seat, move the seat until you can see its mounting bolts and seat mount cover caps.
- Take care not to scratch the seat cover, interior trim, dashboard and center armrest.
- On reassembly, replace the lower anchor bolt (*) and use liquid thread lock.

1. Pry out the seat mount cover caps.
2. Remove the seat mounting bolts, then remove the seat and disconnect the connector.
3. Pry out the cap, and remove the seat belt lower anchor bolt. Remove the seat.

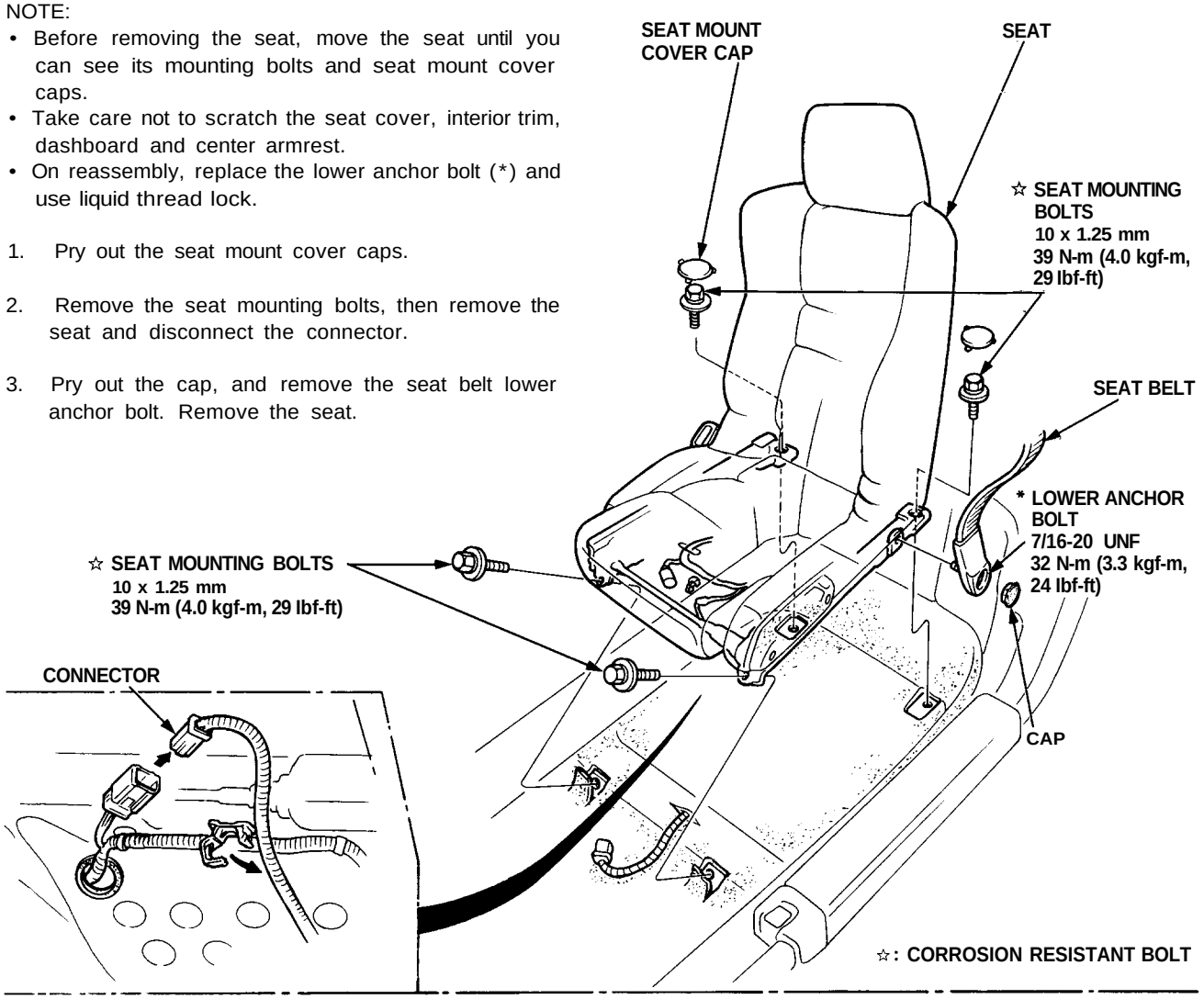

If necessary, remove the power slide cable, power seat switch and seat mount cover.

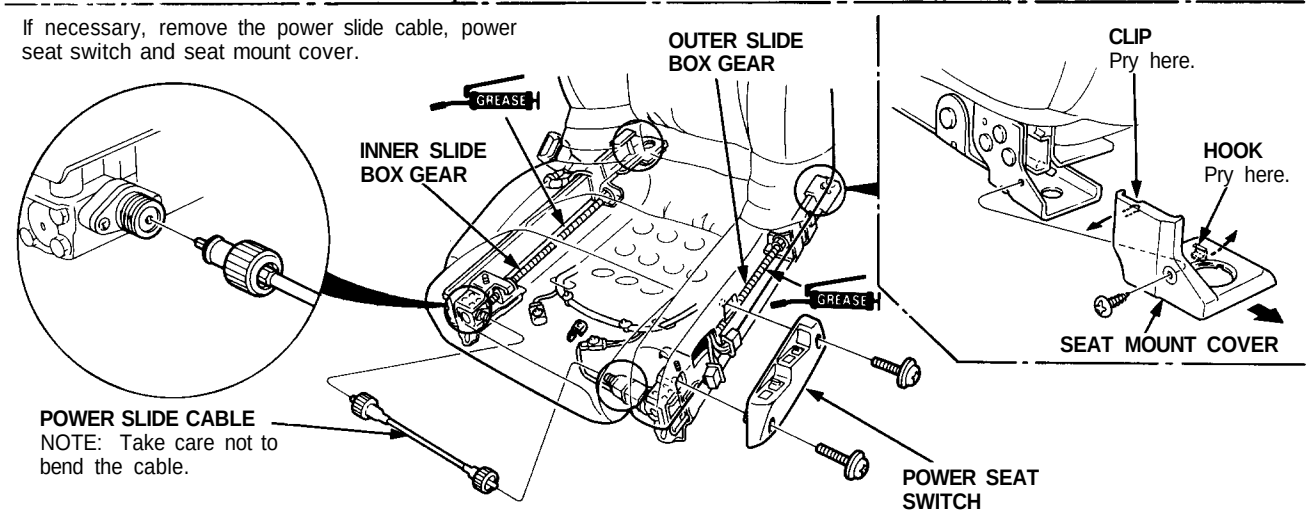

4. Installation is the reverse of the removal procedure.

NOTE: Apply grease to the inner and outer slide box gears.

Seat Cover Replacement

CAUTION: Wear gloves to remove and install the seat cover.

NOTE:
- Take care not to tear the seams or damage the cover.
- Remove the power seat switch (see page 20-39) and seat belt buckle (see page 20-43) from the seat.

1. Detach the clips and hooks from under the seat. Pull the seat cover back.

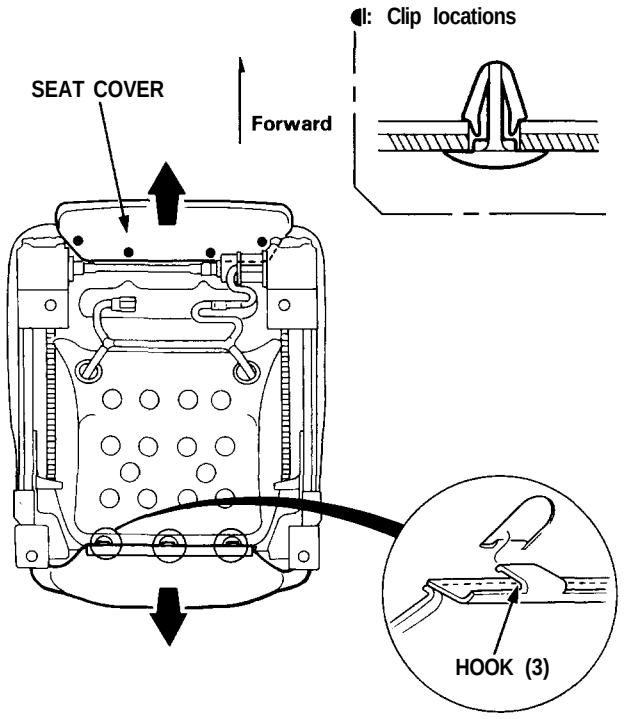

2. Detach the hooks while pulling the seat cover back.

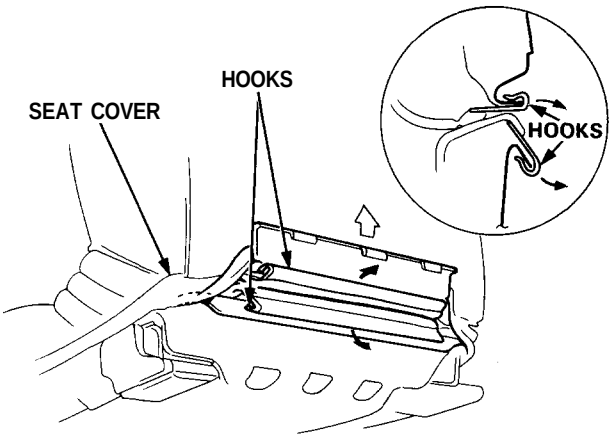

3. Detach the clips from under the seat, then remove the seat cushion.

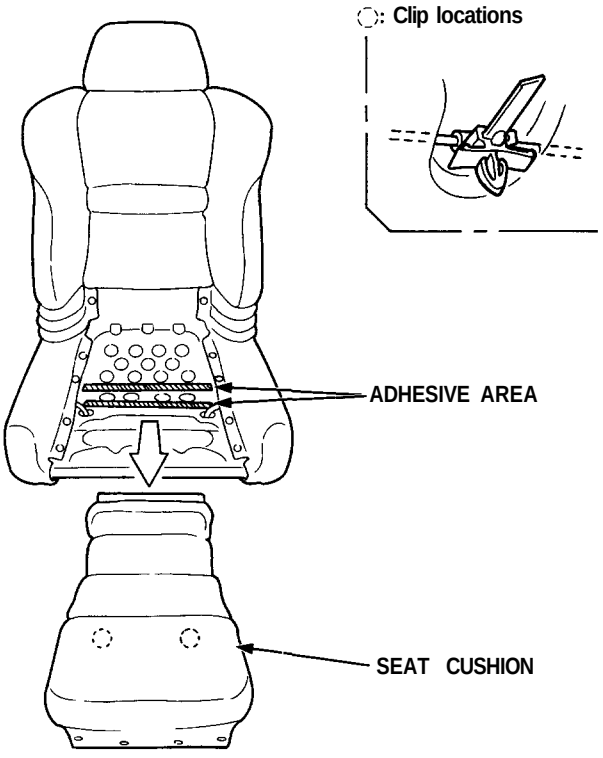

4. Remove the seat belt buckle (see page 20-43). Detach the hooks at both sides of the seat. Remove the screws at both front edges.

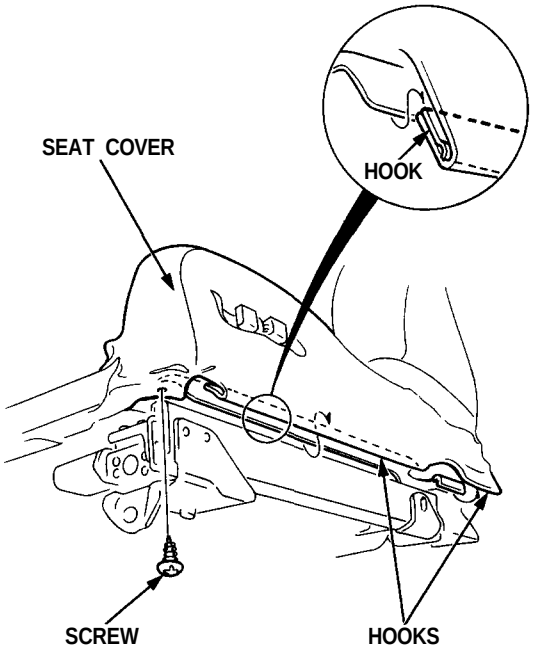

5. Detach the clips, then pull the seat cover back. Remove the fasteners by pulling the seat-back cushion.

NOTE: Take care not to tear the seams or damage the seat cover.

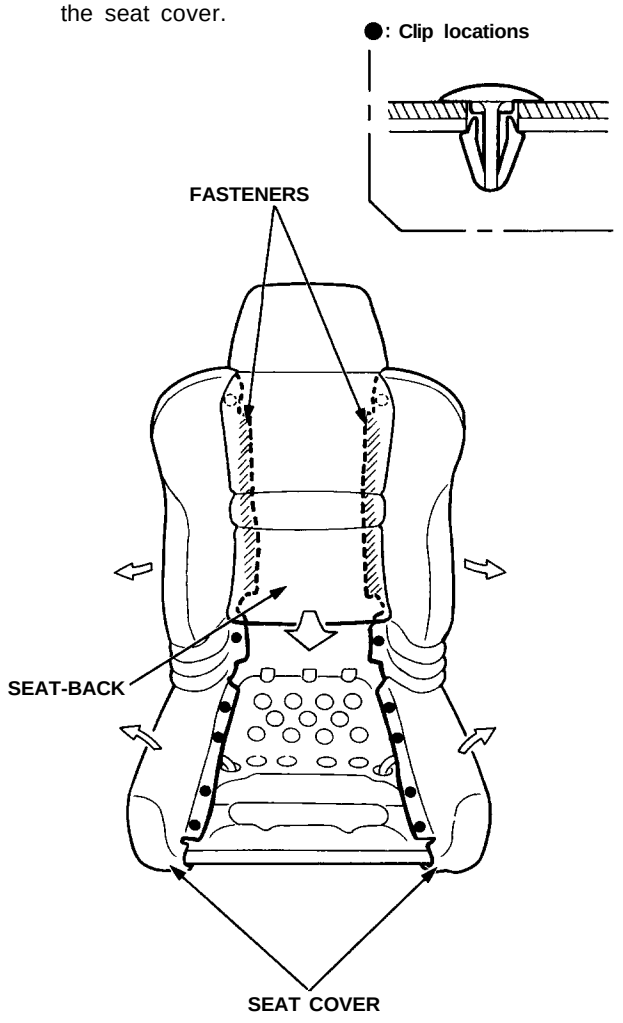

6. Detach the clips from the seat-back, then pull the seat-back cushion up as shown. Remove the retainers, then remove the headrest by pulling it up. Remove the fastener on the left side.

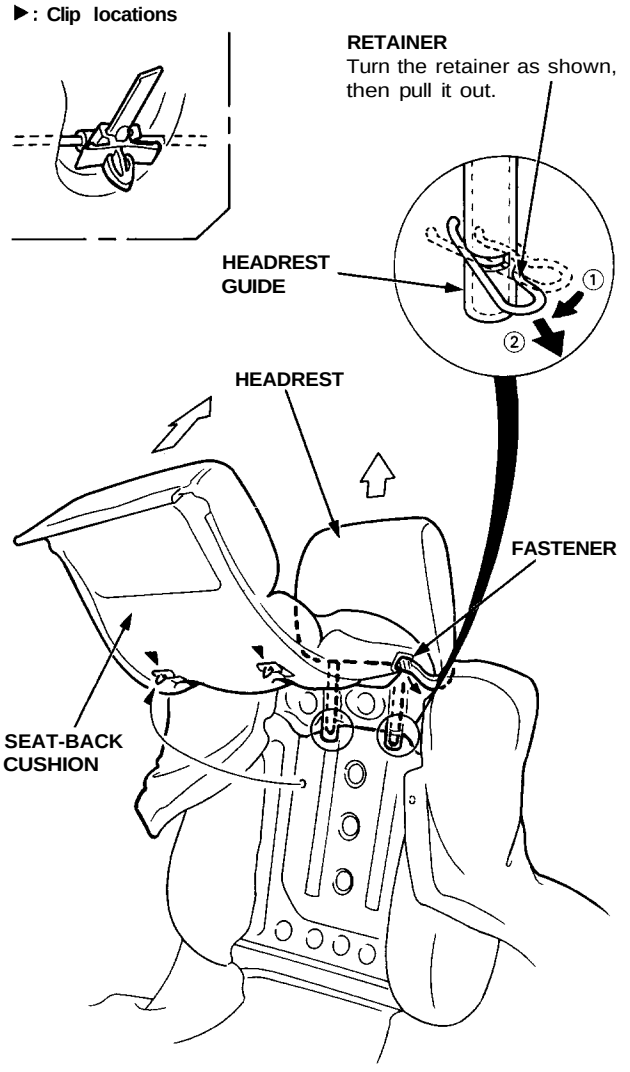

NOTE: When installing the headrest, first install the retainers to the headrest guides.

(cont'd)

Seat Cover Replacement (cont'd)

7. Detach the hooks, then remove the seat-back cushion.

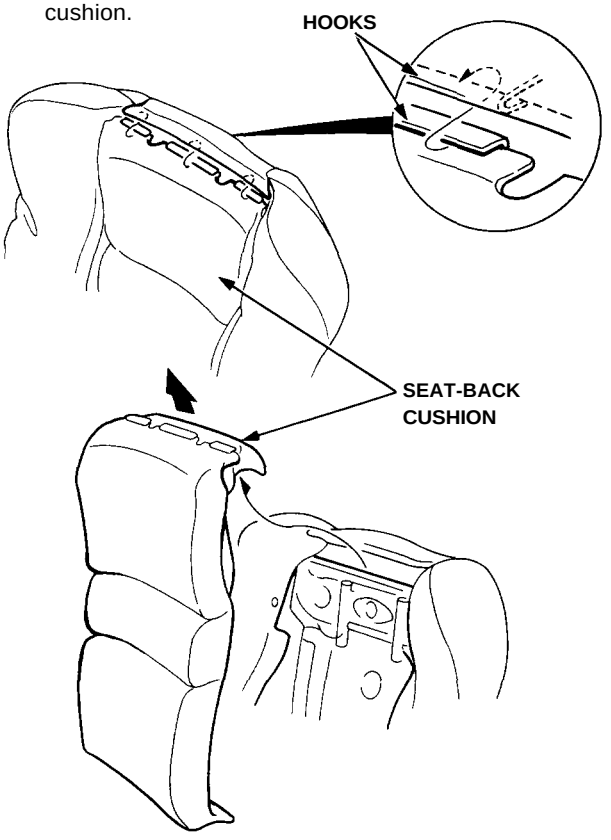

8. Detach the clips, then remove the seat cover.

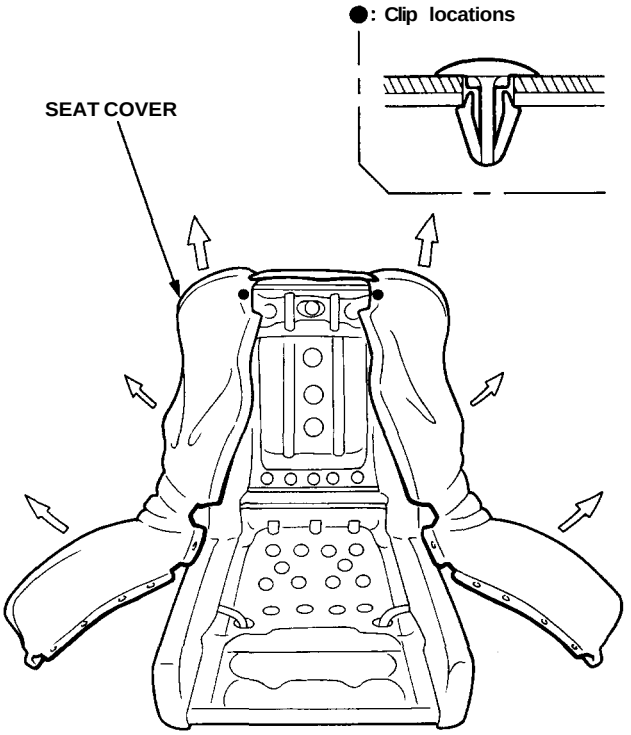

9. Installation is the reverse of the removal procedure.

NOTE:

- To prevent wrinkles when installing the seat cover, make sure the material is stretched evenly over the frame before securing all the hooks and clips.
- If necessary, replace any damaged clips.
- Before installing the seat cushion, scrape the old adhesive smoothly from the seat cushion frame. Clean the bonding surface with a sponge dampened in alcohol.
  Apply an adhesive to the shadowed area as shown.

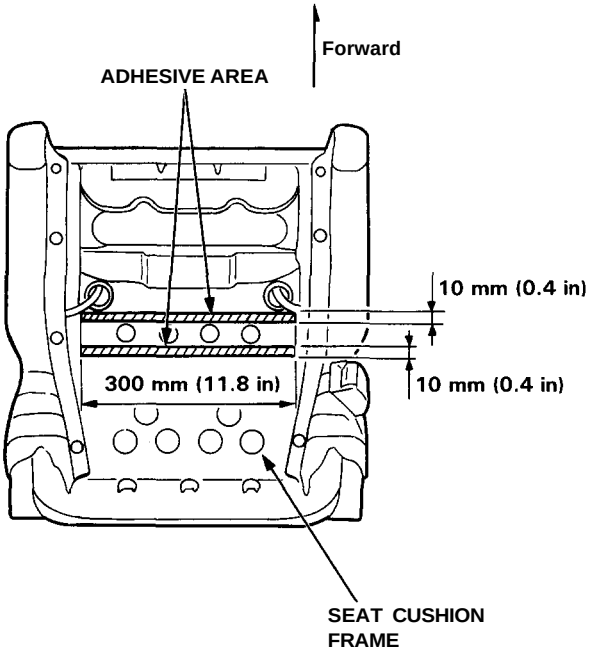

Seat Belts

Replacement

SRS wire harnesses are routed near the retractor.

⚠WARNING All SRS wire harnesses and connectors are colored yellow. Do not use electrical test equipment on these circuits.

CAUTION:
- **Be careful not to damage the SRS wire harnesses when servicing the retractor.**
- **Remove the short connector (RED) from the its holder and disconnect the SRS wire harness connector, then connect the short connector (RED) to the tensioner connector.**

NOTE: To prevent dust, wrap the SRS wire harness connector with a protective cover.

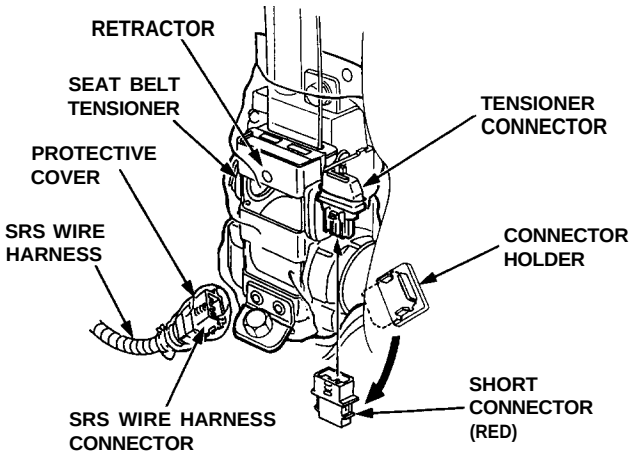

CAUTION: Check the seat belts for damage, and replace them if necessary. Be careful not to damage them during removal and installation.

1. Remove:
   - Seat (see page 20-39)
   - Center pillar trim panel (see page 20-38)

2. Remove the three anchor bolts, retractor bolt and retractor mounting bolt, then remove the seat belt and seat belt buckle.

CAUTION: When removing the retractor, do not touch the seat belt tensioner.

NOTE: When removing the anchor bolts and retractor bolt.

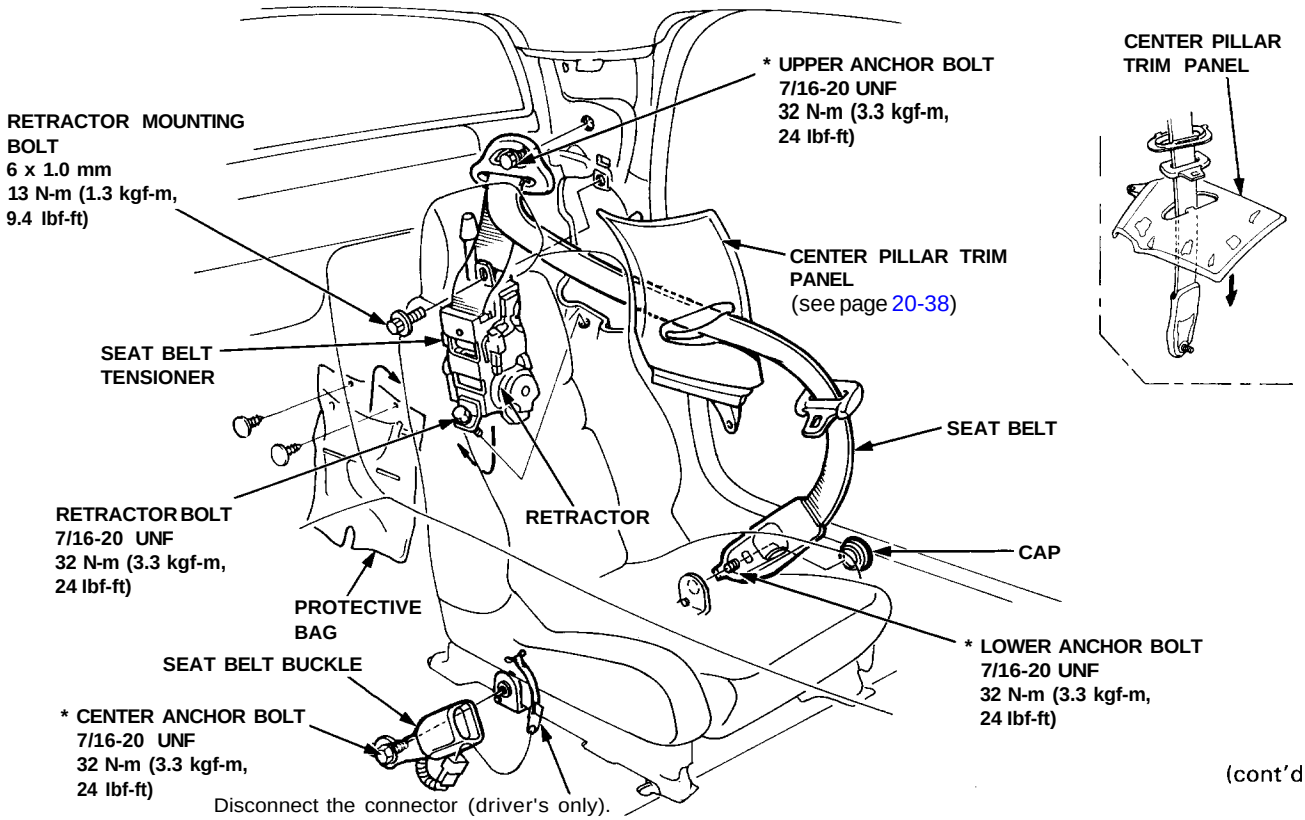

(cont'd)

Replacement (cont'd)

Anchor bolt construction:

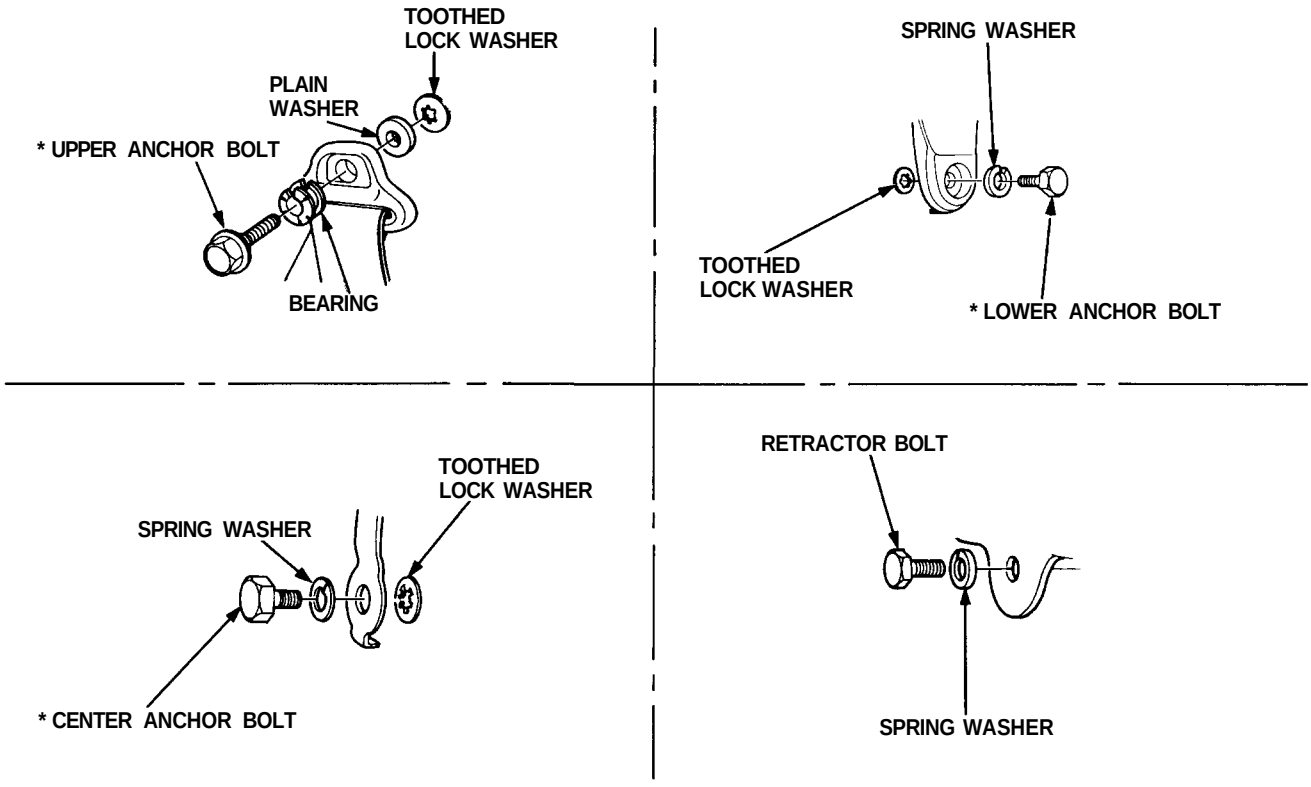

3. Check that the retractor locking mechanism functions as described on page 20-45.

4. Installation is the reverse of the removal procedure.

NOTE:
- Make sure you assemble the washers on the anchor bolts as shown.
- Before attaching the center pillar trim panel, make sure there are no twists or kinks in the seat belts.
- On reassembly, replace the anchor bolts (*) and use liquid thread lock.

Inspection

SRS wire harnesses are routed near the retractor.

⚠WARNING All SRS wire harnesses and connectors are colored yellow. Do not use electrical test equipment on these circuits.

CAUTION:
- **Be careful not to damage the SRS wire harnesses when servicing the retractor.**
- **Remove the short connector (RED) from the its holder and disconnect the SRS wire harness connector, then connect the short connector (RED) to the tensioner connector.**

NOTE: To keep out dust, wrap the SRS wire harness connector with a protective cover.

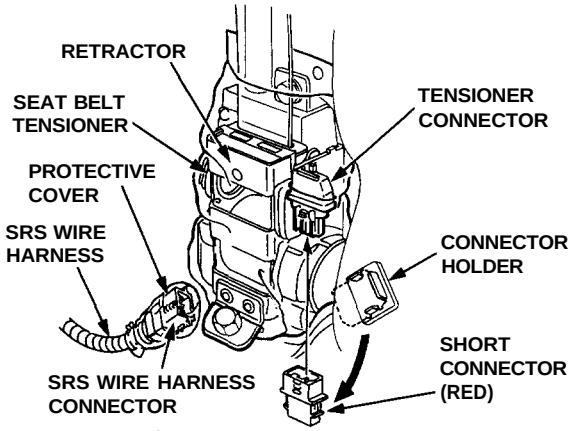

Retractor Inspection

CAUTION: When checking the retractor, do not touch the seat belt tensioner.

1. Before installing the retractor, check that the seat belt can be pulled out freely.

2. Make sure that the seat belt does not lock when the retractor is leaned slowly up to 15° from the mounted position. The seat belt should lock when the retractor is leaned over 40°.

CAUTION: Do not attempt to disassemble the retractor. *

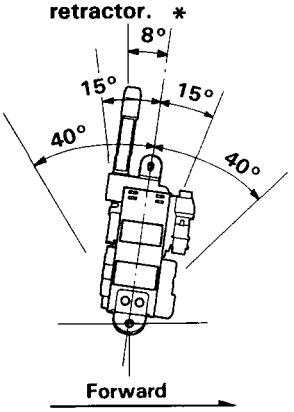

*: Mounted Position

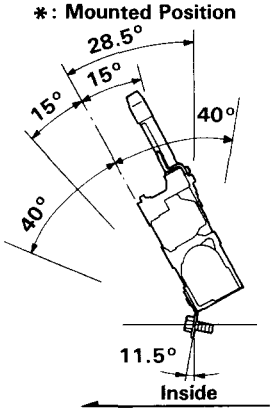

3. Replace the seat belt with a new one if there is any abnormality.

On-the-Car Seat Belt Inspection

1. Check that the seat belt is not twisted or caught on anything.

2. After installing an anchors, check for free movement on its retaining bolt. If necessary, remove the bolt and check that the washers and other parts are not damaged or improperly installed.

3. Check the seat belts for damage or discoloration. Clean with a shop towel if necessary.

CAUTION: Use only soap and water to clean.

NOTE: Dirt built-up in the metal loops of the seat belt anchors can cause the seat belts to retract slowly. Wipe the inside of the loops with a clean cloth dampened in isopropyl alcohol.

4. Check that the seat belt does not lock when pulled out slowly. The seat belt is designed to lock only during a sudden stop or impact.

5. Make sure that the seat belt will retract automatically when released.

6. Replace the seat belt with a new one if there is any abnormality.

Seat Belts

Child Seat Anchor Plate

An attachment point is provided for a child restraint system which uses a top tether. The tether bracket and bolt are available at your Acura dealer. The tether attachment point is located on the panel behind the passenger's seat-back.

1. Adjust the passenger seat fully forward to make room behind the seat-back.
2. Using the dimensions shown, measure and mark the location of the attachment point on the interior panel.
3. Use a razor blade or sharp knife to carefully cut a 1 inch diameter circle at the point you marked. Cut through one layer at a time. You will need to remove two layers to reach the tether attachment.
4. Install the tether bracket and bolt and tighten to: 16 lbf-ft (22 N-m)

Make sure to route the tether through the space between the headrest and seat.

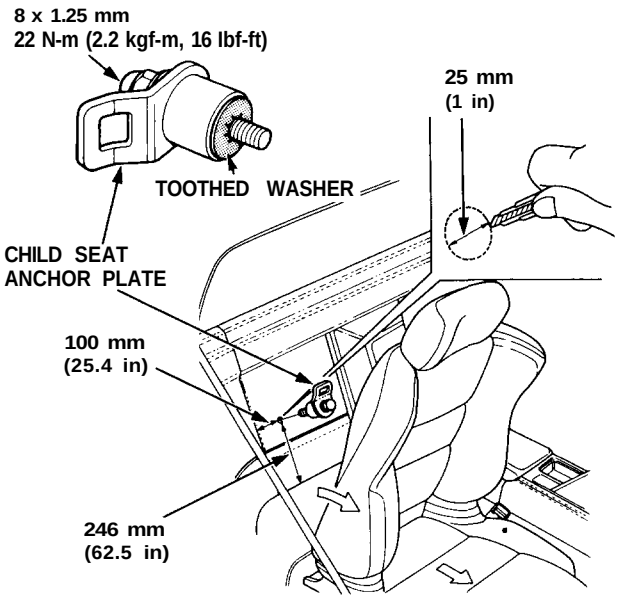

NOTE:

- Do not remove the toothed washer from the child seat anchor plate. Use the child seat anchor plate with the toothed washer attached to it.
- When installing a child seat, follow the instructions of the manufacturer of the child seat.
- Additional anchor plates are available.

⚠WARNING Do not use the anchor plate for any other purpose; it is designed exclusively for installation of a child seat.

Rearview Mirror

Replacement

1. Carefully remove the cover with a flat tip screwdriver.
2. Loosen the lock bolt, then slide the mirror stay from the lug.

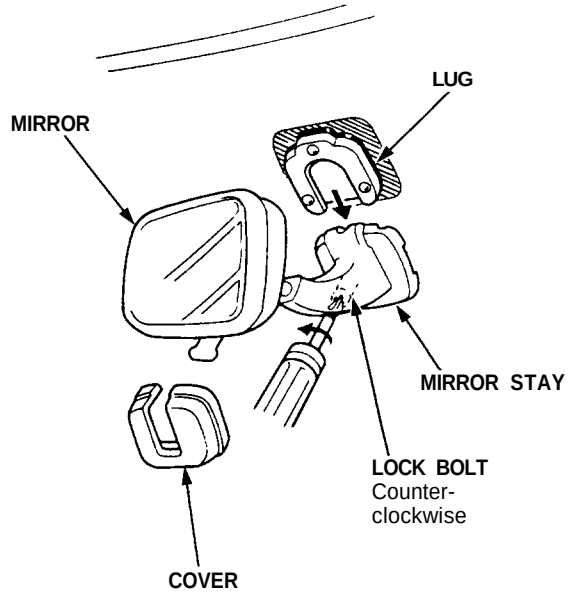

3. Remove the lock bolt, then remove the toothed lock washer and hold spring from the mirror stay.

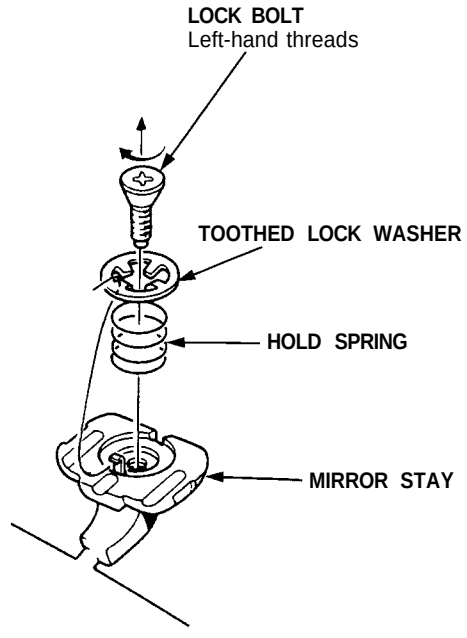

4. Installation is the reverse of the removal procedure.

Carpet

Replacement

SRS components are located in this area. Review the SRS component locations, precautions, and procedures in the SRS (section 24) before performing repairs or service.

1. Remove:
   - Seats (see page 20-39)
   - Footrest
   - Under-dash fuse box lid (see page 20-38)
   - Side sill trim (see page 20-38)
   - Side sill pad (see page 20-38)
   - Rear side trim panel (see page 20-38)
   - Center armrest (see page 20-49)
   - Center console panel (see page 20-52)
2. Detach the clips at the front edge (passenger's).
3. Remove the console carpet attaching screw from the heater unit (passenger's).
4. Disconnect the air duct (driver's) and air vent, then remove the carpet hooks from the dashboard inside screws.

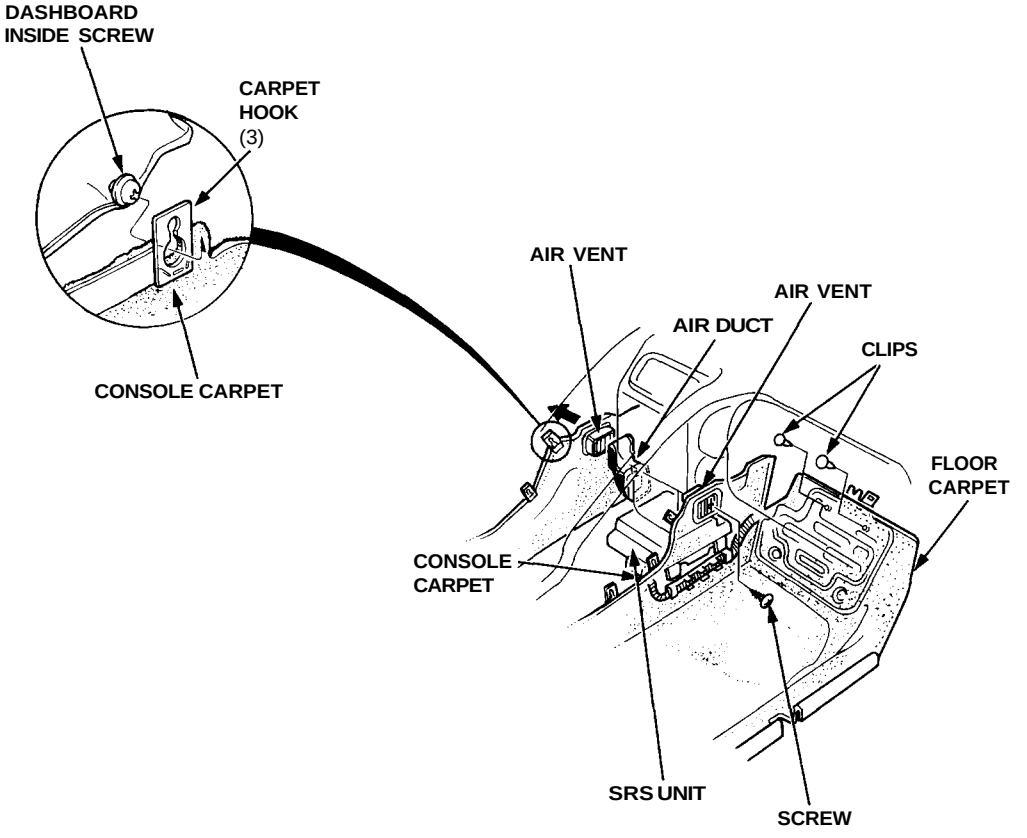

(cont'd)

Replacement (cont'd)

5. Pull up the retainers, then remove the floor carpets.

6. Remove the console carpets.

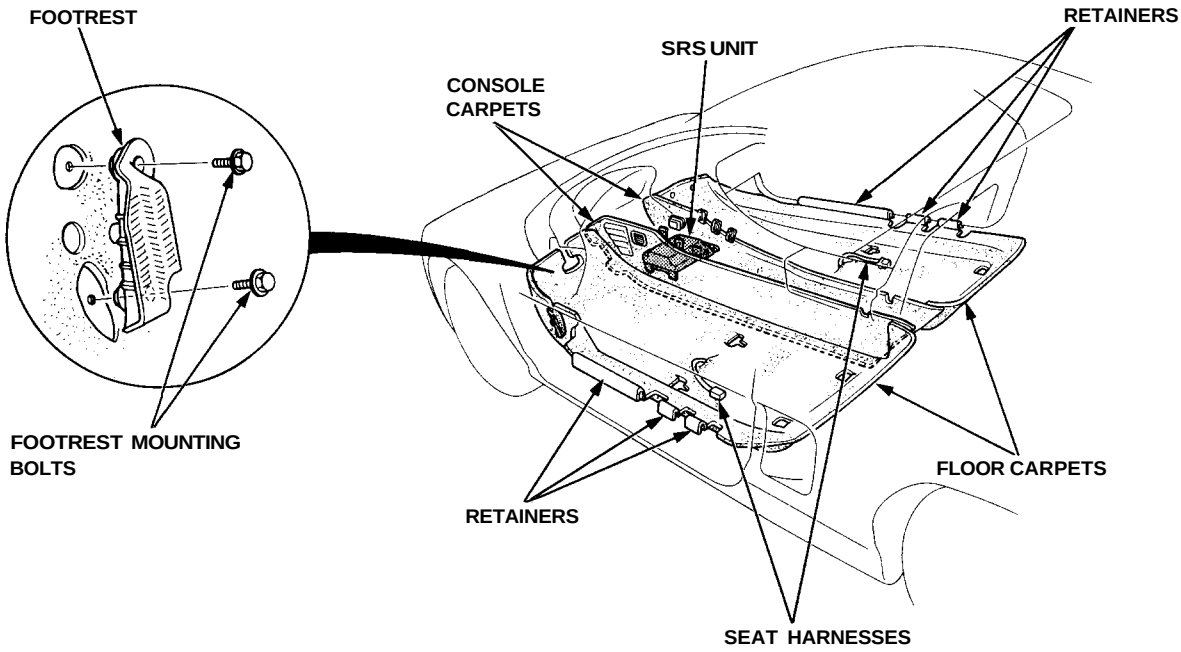

7. Installation is the reverse of the removal procedure.

NOTE:
- Take care not to damage, wrinkle or twist the carpets.
- Make sure the air vents are connected, into the heater unit and air duct.
- Make sure the seat harnesses are routed correctly.

Center Armrest

Replacement

CAUTION: When removing the center armrest inner panel, wrap the flat tip screwdriver with protective tape or a shop towel to prevent damage.

NOTE: Take care not to scratch the center armrest, dashboard and rear center trim panel.

Disassemble in numbered sequence.

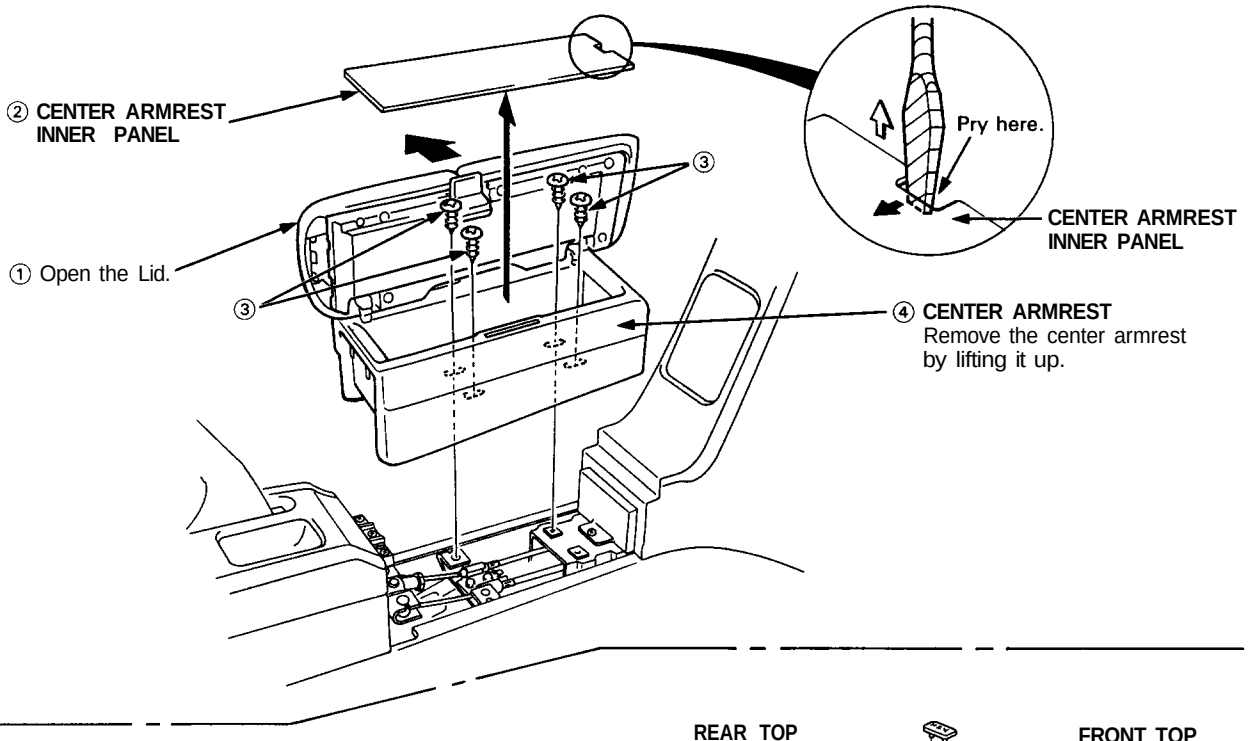

Disassembly:

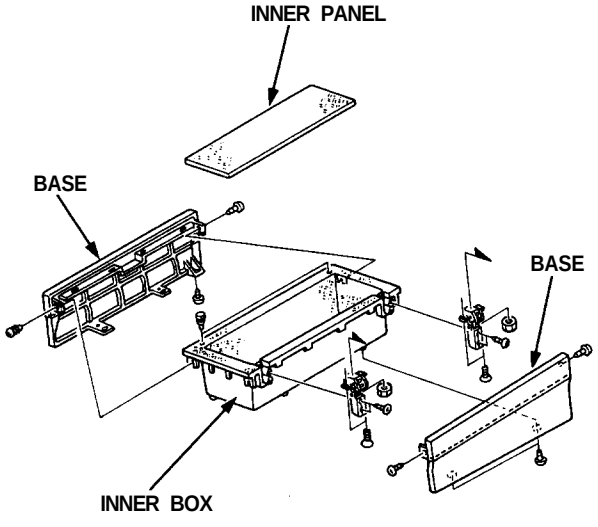

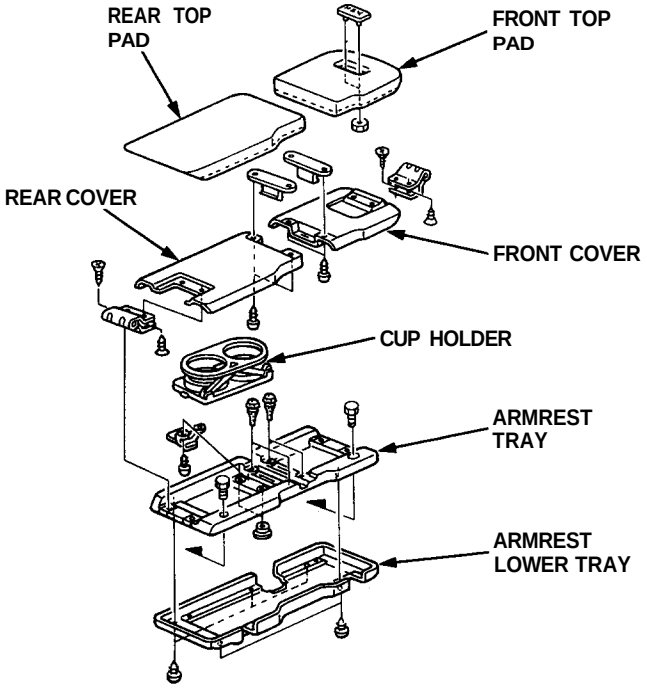

Installation is the reverse of the removal procedure.

Dashboard

Component Removal/Installation

Clock and center air vent removal:

NOTE: Take care not to scratch the dashboard and related parts.

1. Remove the clock by pulling it backward from the center air vent, then disconnect the connector.
2. Remove the center air vent mounting screws.

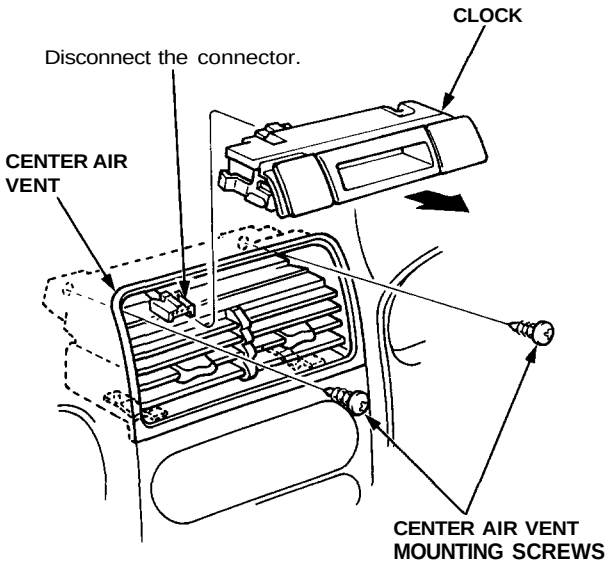

3. Insert a plastic between the center air vent and center console panel to prevent damaging them.

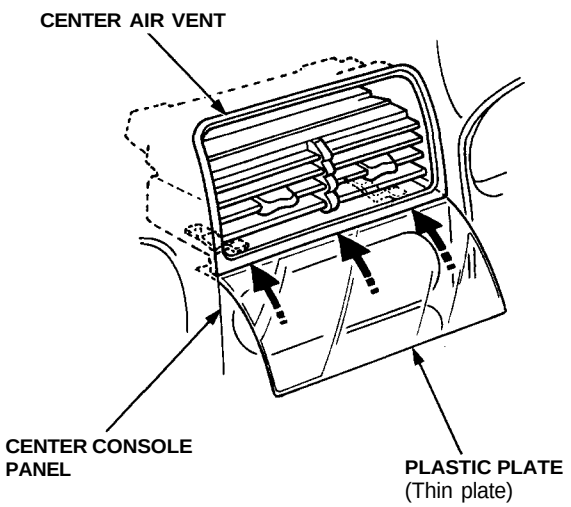

4. To make a gap between the center air vent and dashboard, pull the top of the center air vent while lowering it as shown.

NOTE: Make as large a gap as possible.

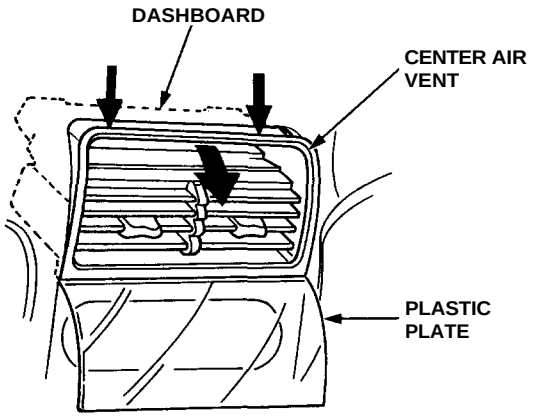

5. Insert a flat tip screwdriver between the center air vent and dashboard as shown.

NOTE: Use the correct size flat tip screwdriver as shown.

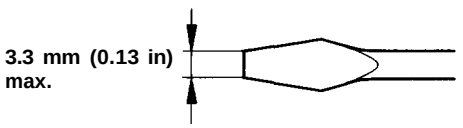

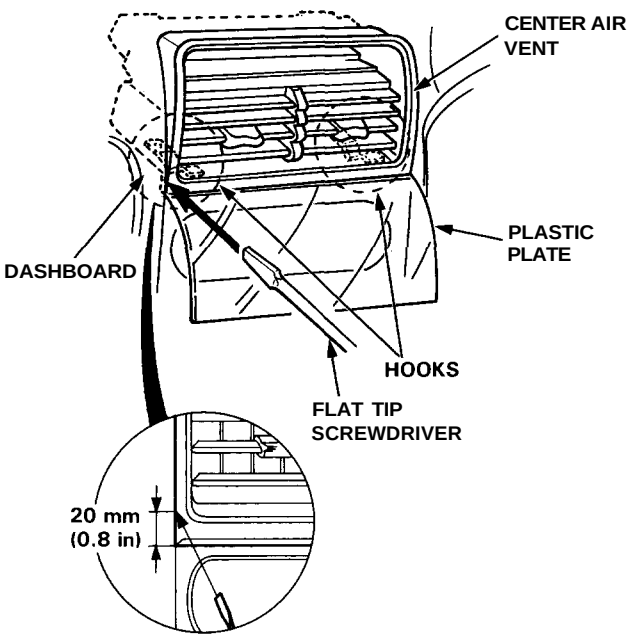

6. After inserting the screwdriver, turn it 90°.

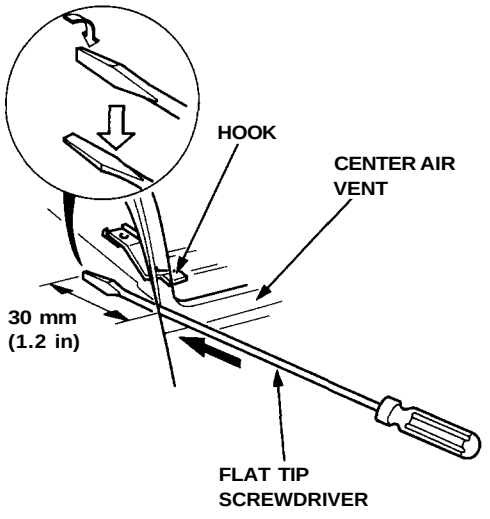

7. Insert the tip the screwdriver in under the hook by pivoting it. Detach the hook by prying it.

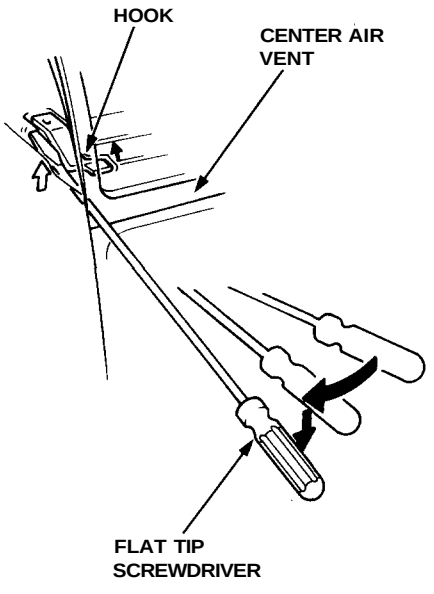

8. Pull the center air vent backward while prying the hook.

CAUTION: Use a shop towel on the dashboard to prevent damage.

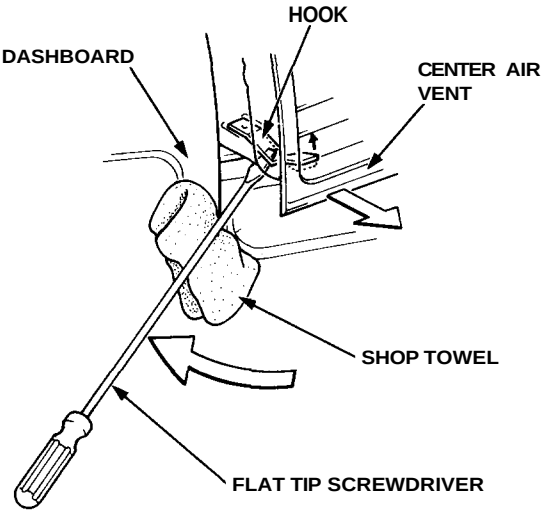

9. Detach the other hook in the same manner, then remove the center air vent.

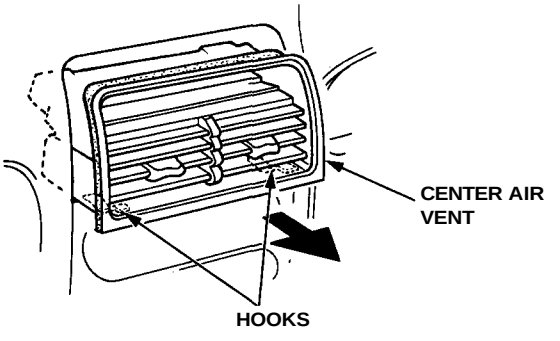

10. Install the center air vent and clock.

NOTE:

- If there is a minor dent on the dashboard, repair it by hand as shown.

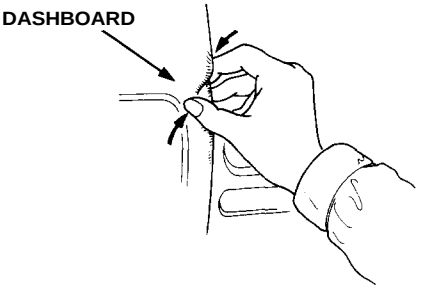

- Make sure the connector of the clock is connected properly.

(cont'd)

Component Removal/Installation (cont'd)

SRS components are located in this area. Review the SRS component locations, precautions, and procedures in the SRS (section 24) before performing repairs or service.

Center console panel removal:

NOTE:
- Take care not to scratch the dashboard, center console panel and related parts.
- Do not drop the screws inside the dashboard.
- Remove the center armrest (see page 20-49), clock and center air vent (see page 20-50).

Disassemble in numbered sequence.

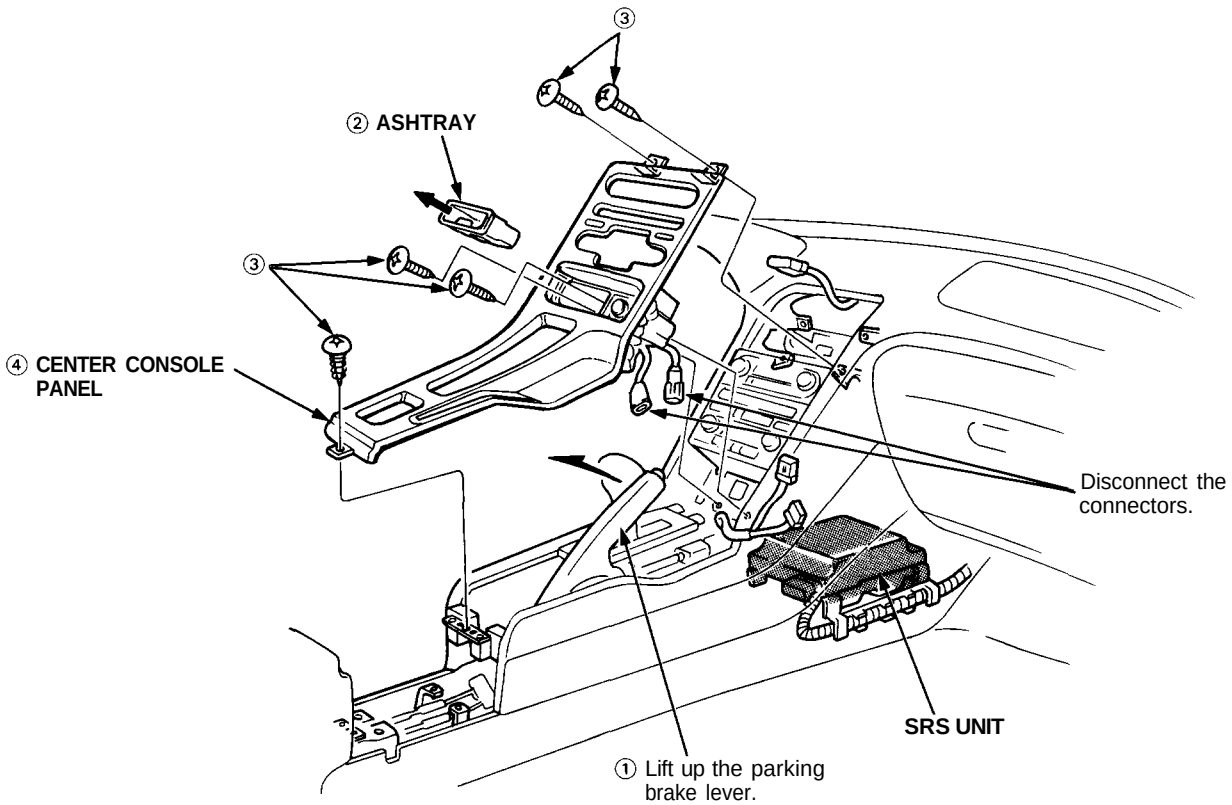

Installation is the reverse of the removal procedure.

NOTE: Make sure the connectors are connected properly.

Climate control unit, stereo cassette/radio and glove box removal:

Disassemble in numbered sequence.

NOTE: Remove the center console panel.

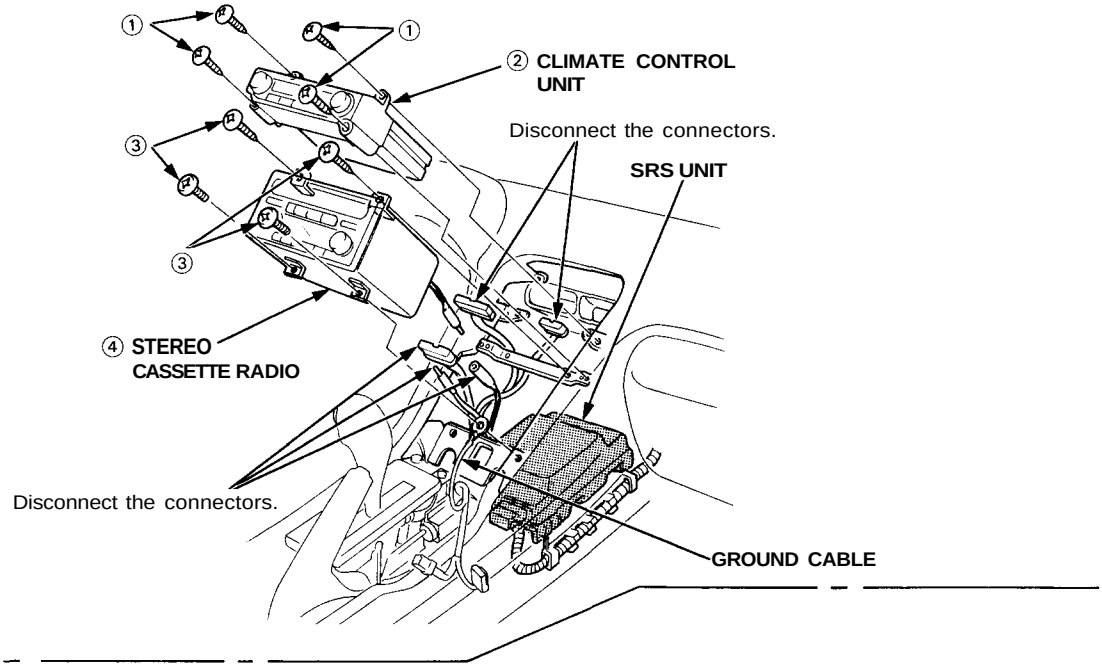

Passenger's:

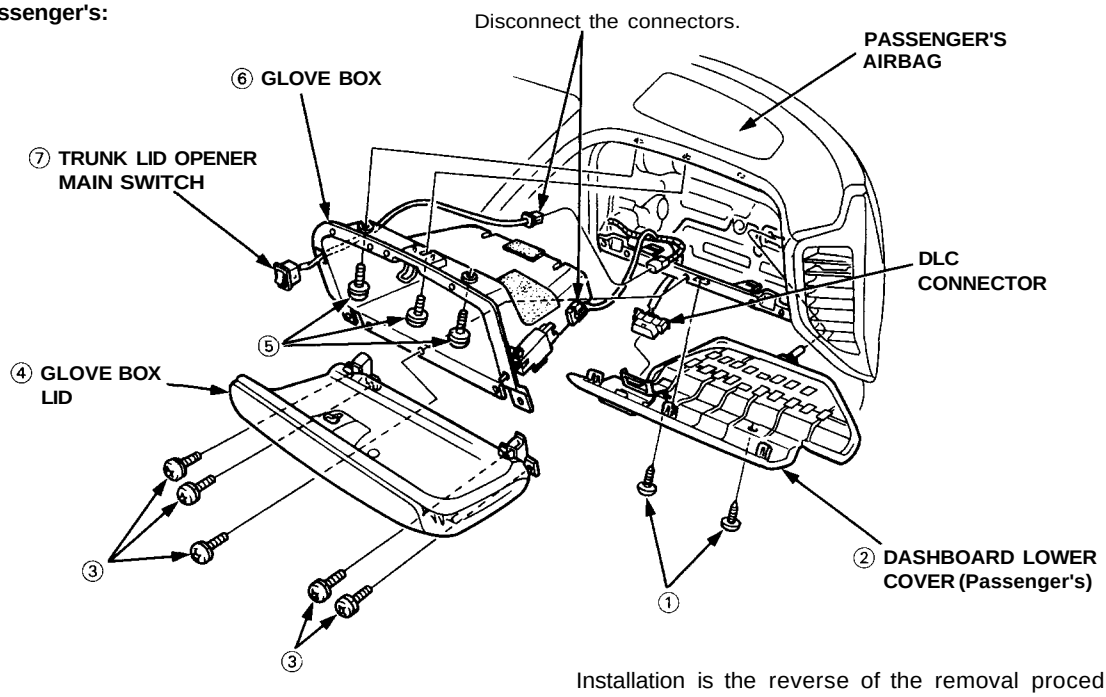

Installation is the reverse of the removal procedure.

NOTE: Make sure the connectors are connected properly.

(cont'd)

Component Removal/Installation (cont'd)

SRS components are located in this area. Review the SRS component locations, precautions, and procedures in the SRS (section 24) before performing repairs or service.

NOTE: Take care not to scratch the dashboard, steering column and related parts.

CAUTION: When prying with a flat tip screwdriver, wrap it with protective tape or a shop towel to prevent damage.

Drivers:

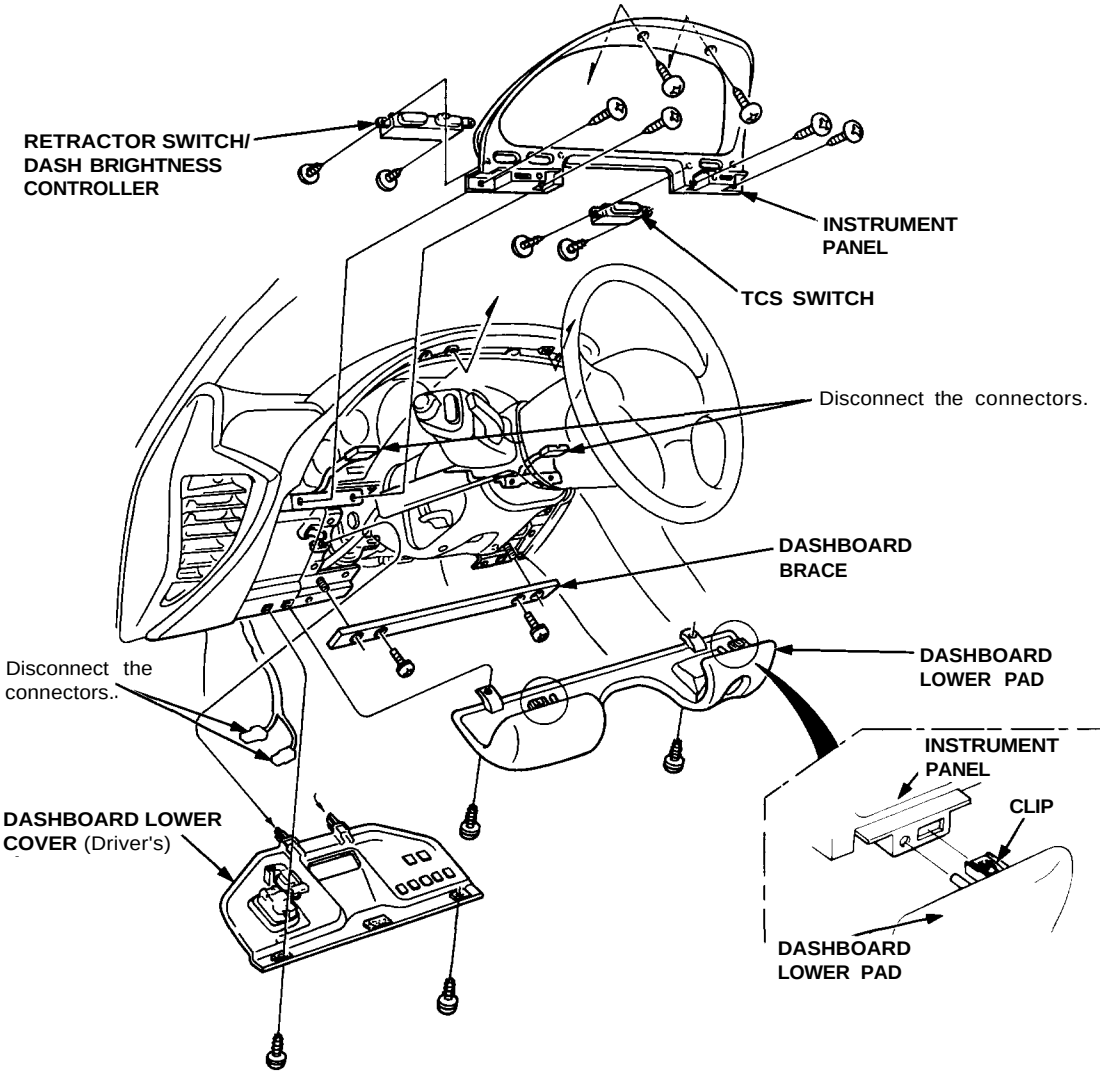

Installation is the reverse of the removal procedure.

NOTE: Make sure the connectors are connected properly.

Replacement

SRS components are located in this area. Review the SRS component locations, precautions, and procedures in the SRS (section 24) before performing repairs or service.

1. To remove the dashboard, first remove the:
   - Seats (see page 20-39)
   - Dashboard lower cover (Driver's) (see page 20-54)
   - Dashboard lower pad (see page 20-54)
   - Dashboard brace (see page 20-54)
   - Center armrest (see page 20-49)
   - Clock, center air vent and console panel (see pages 20-50, 20-51, 20-52)
   - Climate control unit and stereo cassette/radio (see page 20-53)
   - Dashboard lower cover (Passenger's) (see page 20-53)
   - Glove box lid and glove box (see page 20-53)

2. Lower the steering column (see section 17).

⚠ WARNING To avoid accidental deployment and possible injury always install the short connector on the airbag connector when the SRS wire harness is disconnected.

NOTE:
- Remove the access panel, then remove the short connector (RED). Disconnect the connector between the airbag and cable reel, then connect the short connector (RED) to the airbag connector.

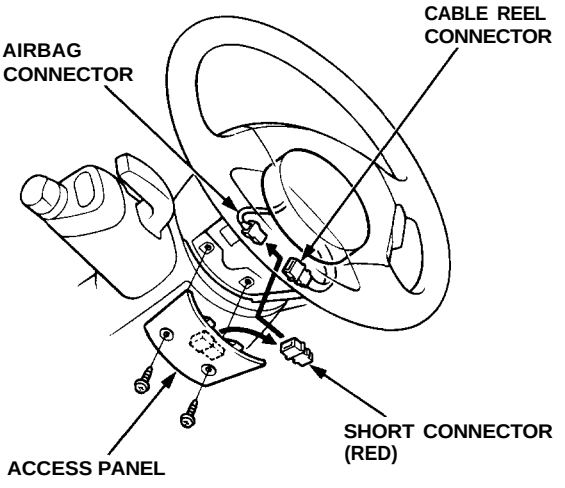

- Connect the special tool to the cable reel connector.

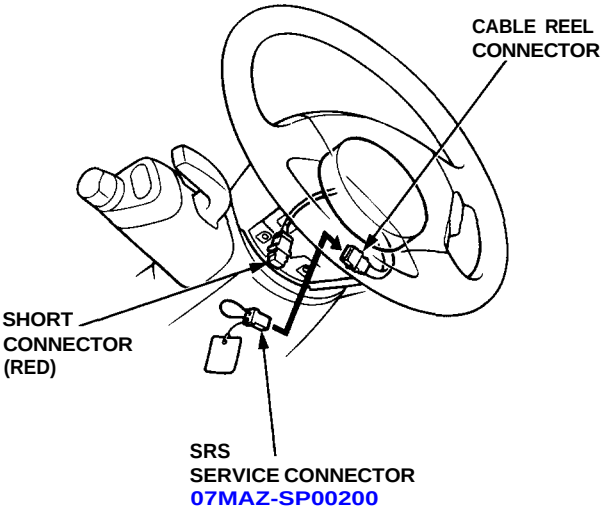

(cont'd)

Replacement (cont'd)

NOTE: To prevent damage to the steering column, wrap it with a shop towel.

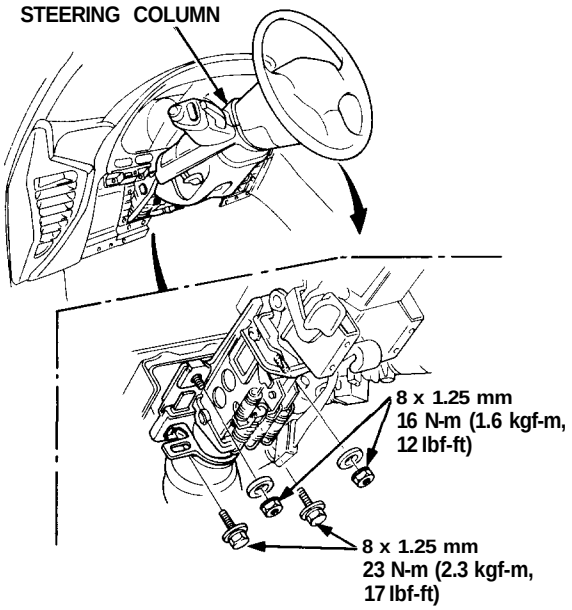

3. Remove the nuts, then remove the airbag bracket (passenger's).

⚠ WARNING To avoid accidental deployment and possible injury always install the short connector on the airbag connector when the SRS wire harness is disconnected.

NOTE:

- Disconnect the connector between the passenger's airbag and SRS main wire harness. Connect the short connector (RED) to the airbag the connector.

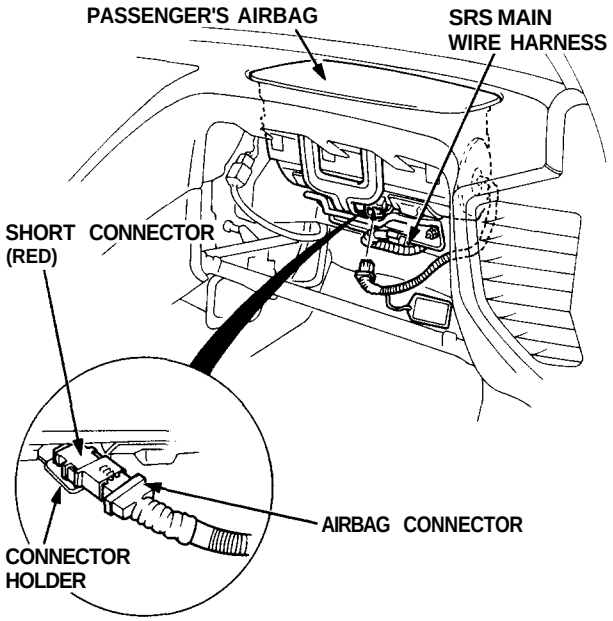

- Connect the special tool to the SRS main wire harness connector.

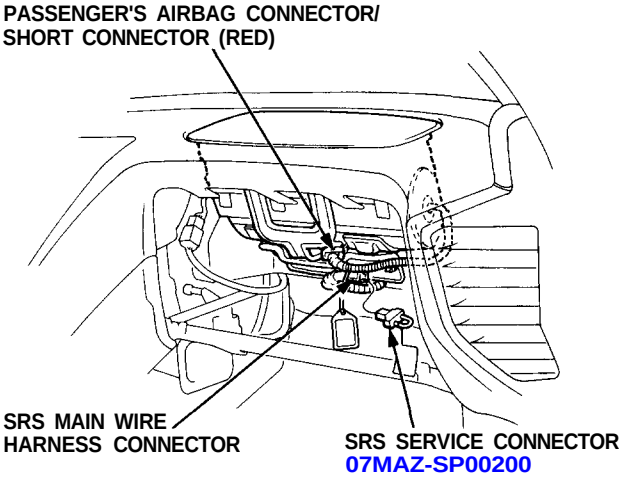

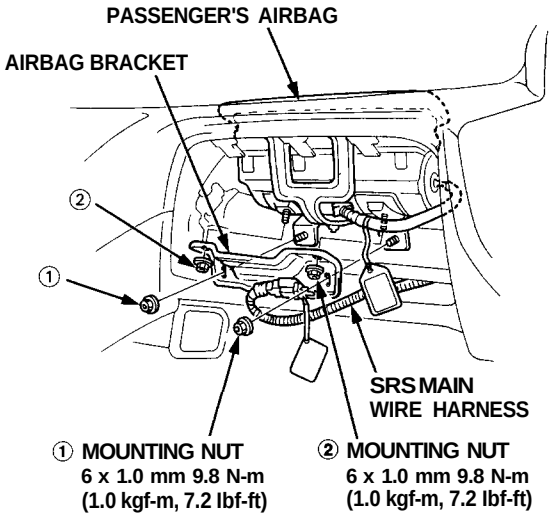

- When installing the airbag bracket, tighten the mounting nuts in the numbered sequence.

4. Remove the instrument panel trim and gauge assembly.

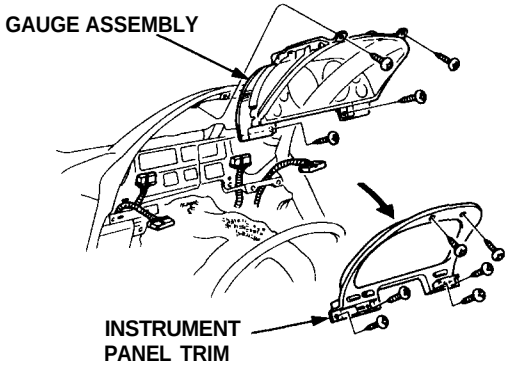

5. Remove the mounting screws, then remove the side air vents from each side of the dashboard.

6. Remove the dashboard end plate, and fold the console carpet down (see page 20-47).

7. Remove the dashboard mounting bolts and screw, then lift and remove the dashboard.

NOTE:
- Take care not to scratch the dashboard.
- Use protective tape on the bottom of the front pillar trim.
- To prevent damage to the shift lever and indicator panel (A/T), wrap them with a shop towel.

CAUTION: When prying with a flat tip screwdriver, wrap it with protective tape or a shop towel to prevent damage.

NOTE: If necessary, remove the defrost panel.

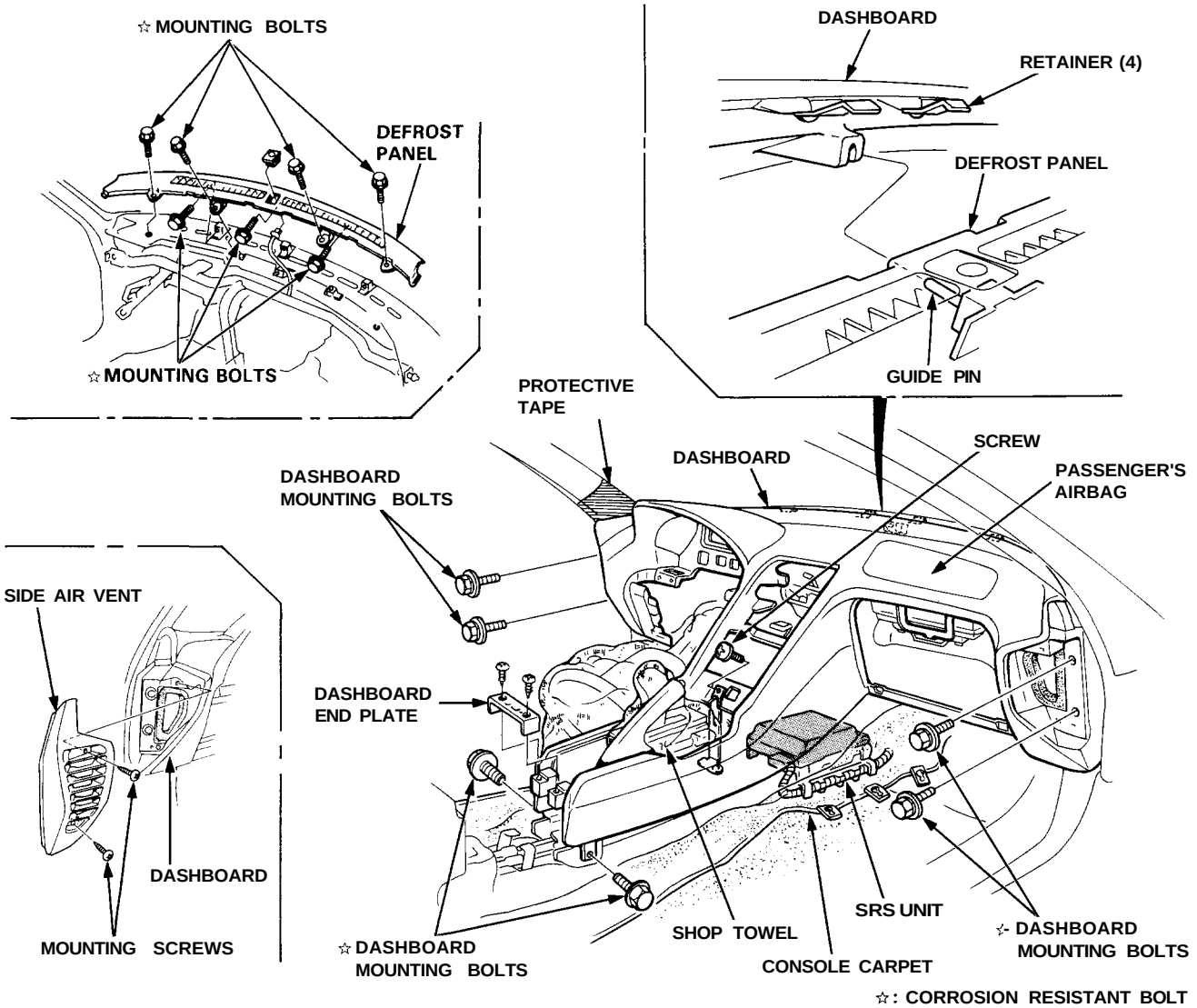

8. Installation is the reverse of the removal procedure.

NOTE:
- Make sure the dashboard fits onto the guide pin and defrost panel correctly.
- Before tightening the mounting bolts, make sure the wire harnesses are not pinched.

Front Bumper

Replacement

1. Loosen the mounting screw, then pull the right and left front turn signal lights out and disconnect the connectors.
2. Remove the skirt covers, then remove the bumper mounting bolts on each side, and lower skirt mounting bolt.
3. Lower the inner fender, then remove the bumper mounting nuts and the skirt mounting bolts from inside the front fender on each side.
4. Lift and remove the front bumper.

   NOTE:
   - Disconnect the washer hose, horn connecters, and ambient sensor connector.
   - An assistant is helpful when removing the front bumper.
   - Take care not to scratch the front bumper.

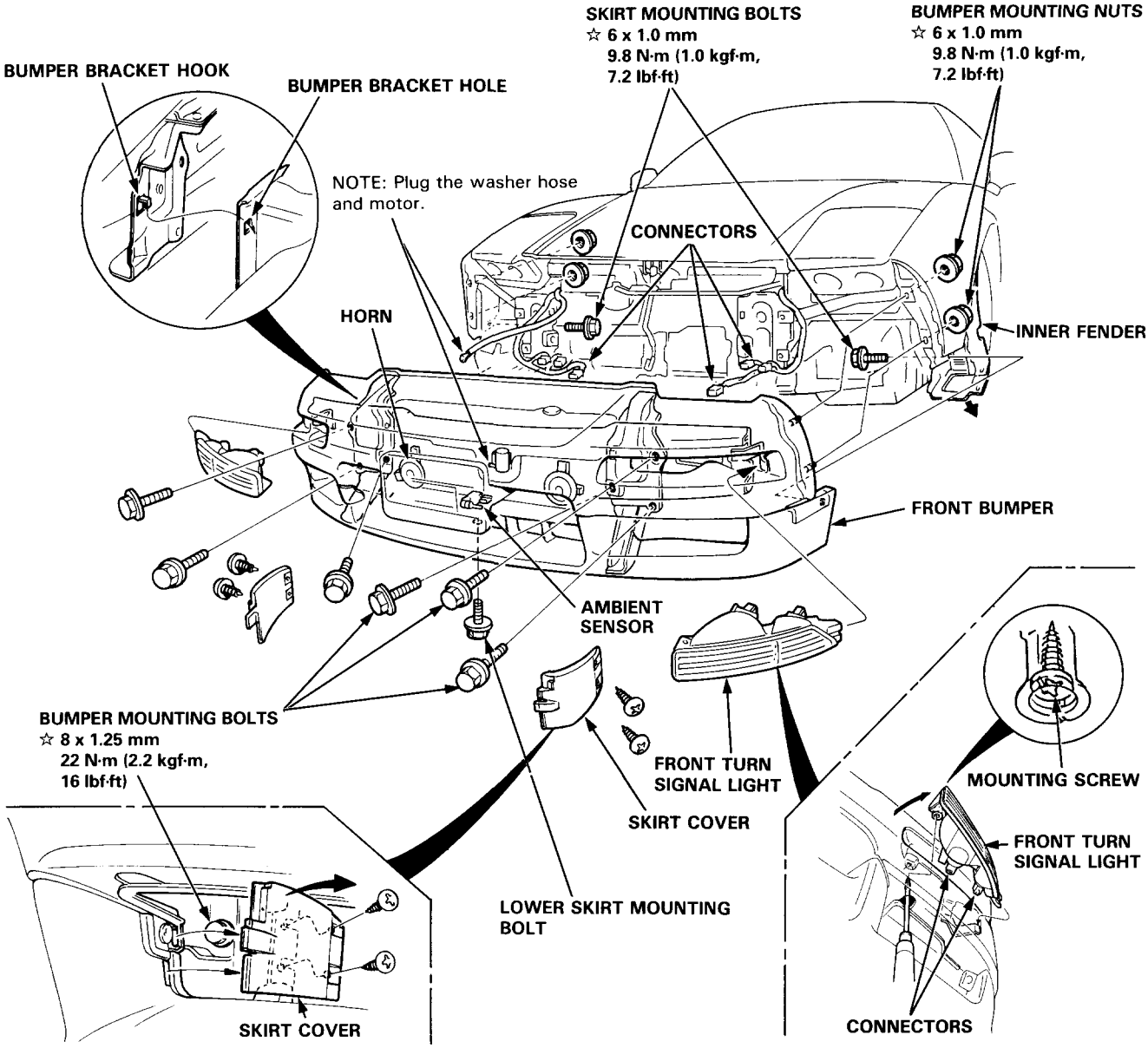

5. Installation is the reverse of the removal procedure.
   NOTE: Insert the bumper bracket hooks into the bumper bracket holes.

☆: CORROSION RESISTANT BOLT/NUT

Disassembly

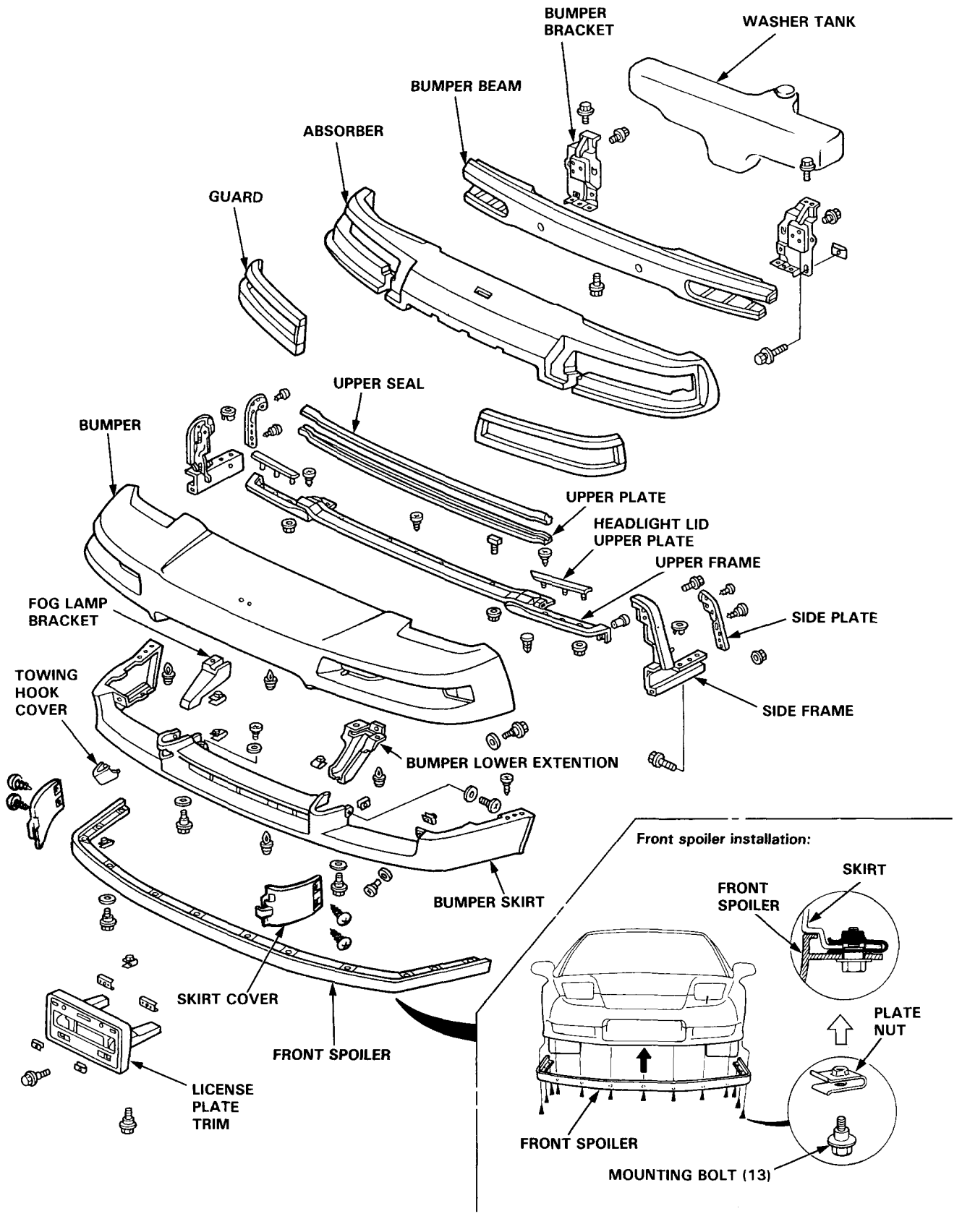

Hood

Replacement/Adjustment

1. Disconnect the washer hose at the Y-joint, then pull it out of the hood.
2. Remove the hood by removing the hood mounting bolts on each side.
3. To remove the hood hinges, remove the front windshield lower molding.

ALIGNMENT:
- The hood hinges can be adjusted right and left as well as fore and aft by using the elongated holes.
- The hood hinges should be shimmed to adjust the height of the hood at the rear edge.
- Adjust the hood latch to obtain the proper height at the forward edge.

4. Installation is the reverse of the removal procedure.

NOTE: Adjust the hood alignment.

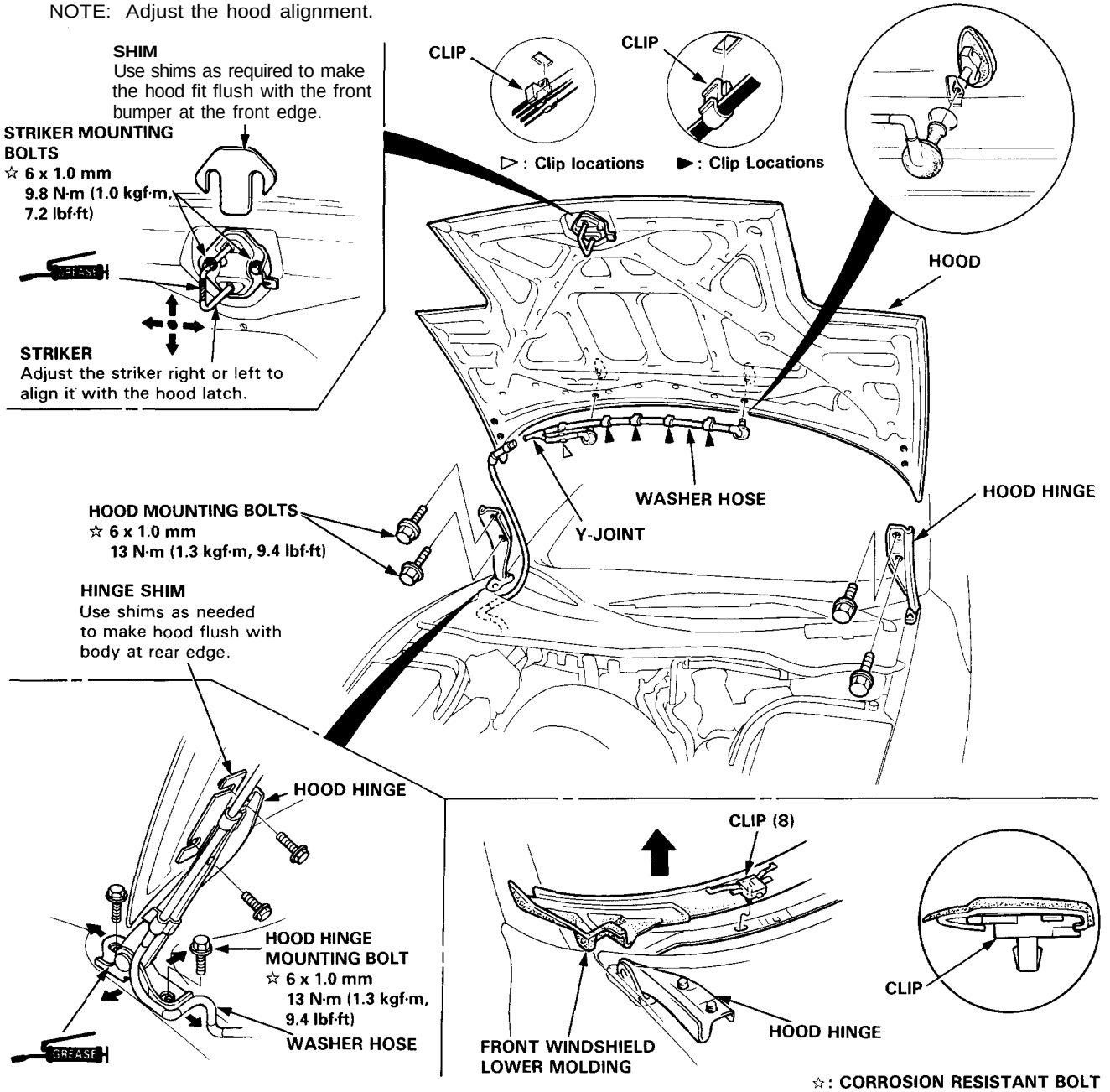

Opener/Latch/Opener Cable Replacement

1. Remove the mounting bolts, then remove the hood release handle and disconnect the opener cable.
2. Remove the mounting bolts and cover, then remove the hood latch and disconnect the opener cable and hood switch connector.
3. Remove the left side inner fender, then pull out the opener cable.

NOTE:
- Before pulling out the opener cable, tie a string to the cable so you can pull it back in later.
- Take care not to bend the opener cable.

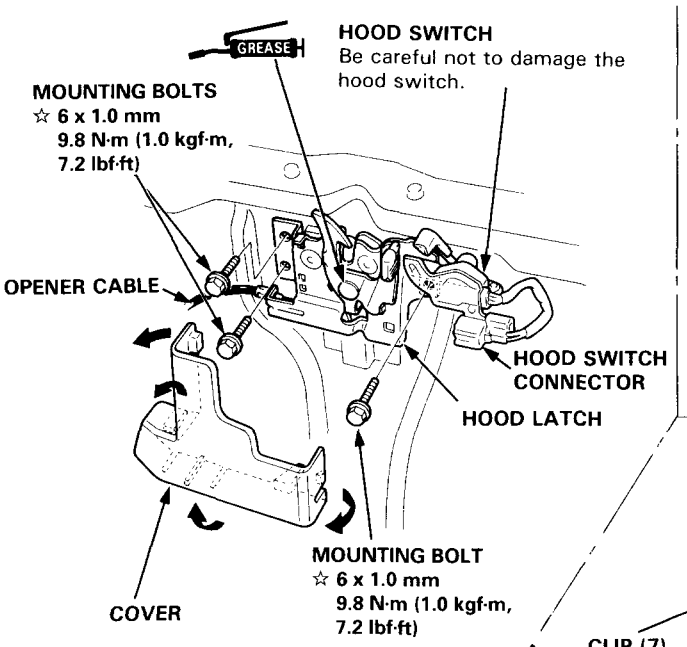

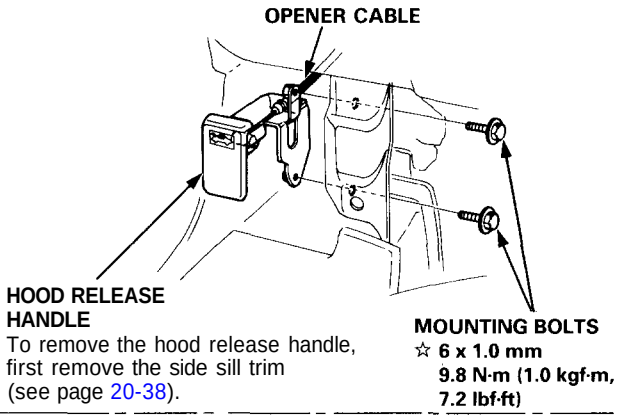

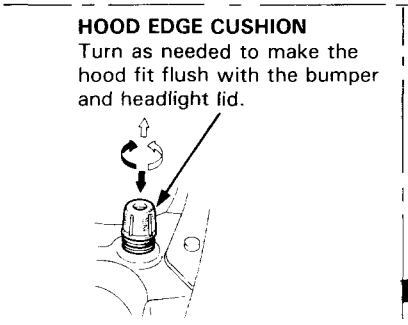

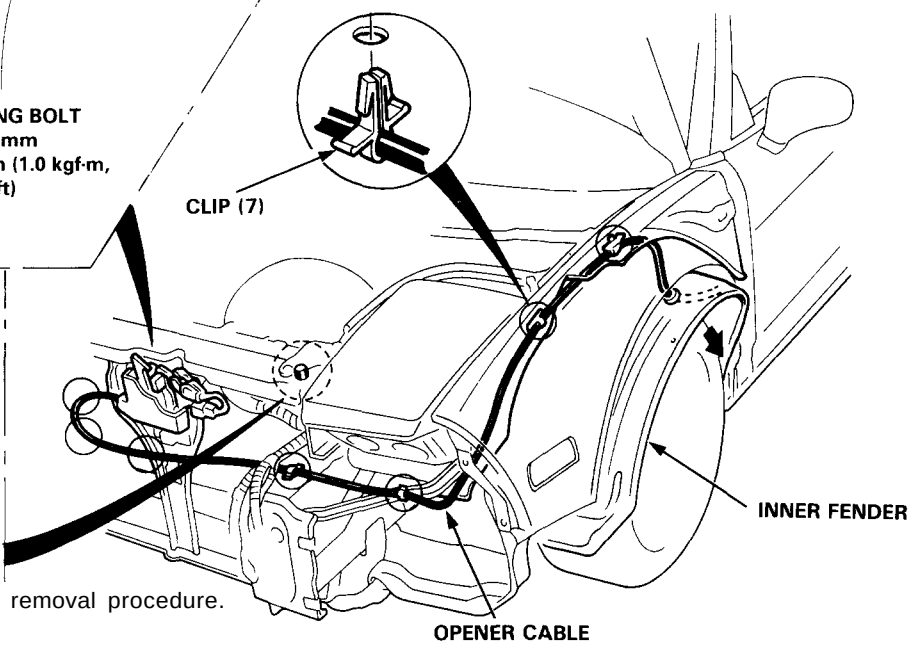

4. Installation is the reverse of the removal procedure.

NOTE:
- Make sure the opener cable is routed and connected properly.
- Adjust the hood alignment.
- If necessary, replace any damaged clips.

ALIGNMENT:
- Move the latch up or down, or right or left, as needed to equalize the gap between the hood and the front bumper.

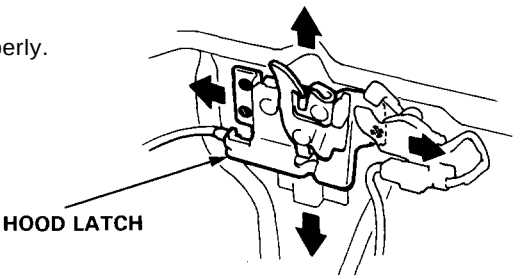

☆: CORROSION RESISTANT BOLT

Rear Hatch/Engine Cover

Replacement/Adjustment

CAUTION: Use fender covers to avoid damaging painted surfaces.

1. Remove the engine cover.
2. Remove the connector cover, and disconnect the rear defogger, antenna lead and ground cable connectors.
3. Remove the rear hatch assembly by removing the support strut mounting bolts and rear hatch mounting bolts.

   NOTE:
   - Have an assistant hold the rear hatch assembly when removing the support struts.
   - Take care not to damage the roof panel and rear hatch glass.

4. Installation is the reverse of the removal procedure.

   NOTE:
   - Before tightening the mounting bolts, adjust the rear hatch assembly and striker.
   - With the rear hatch assembly closed fully, check for water leaks.

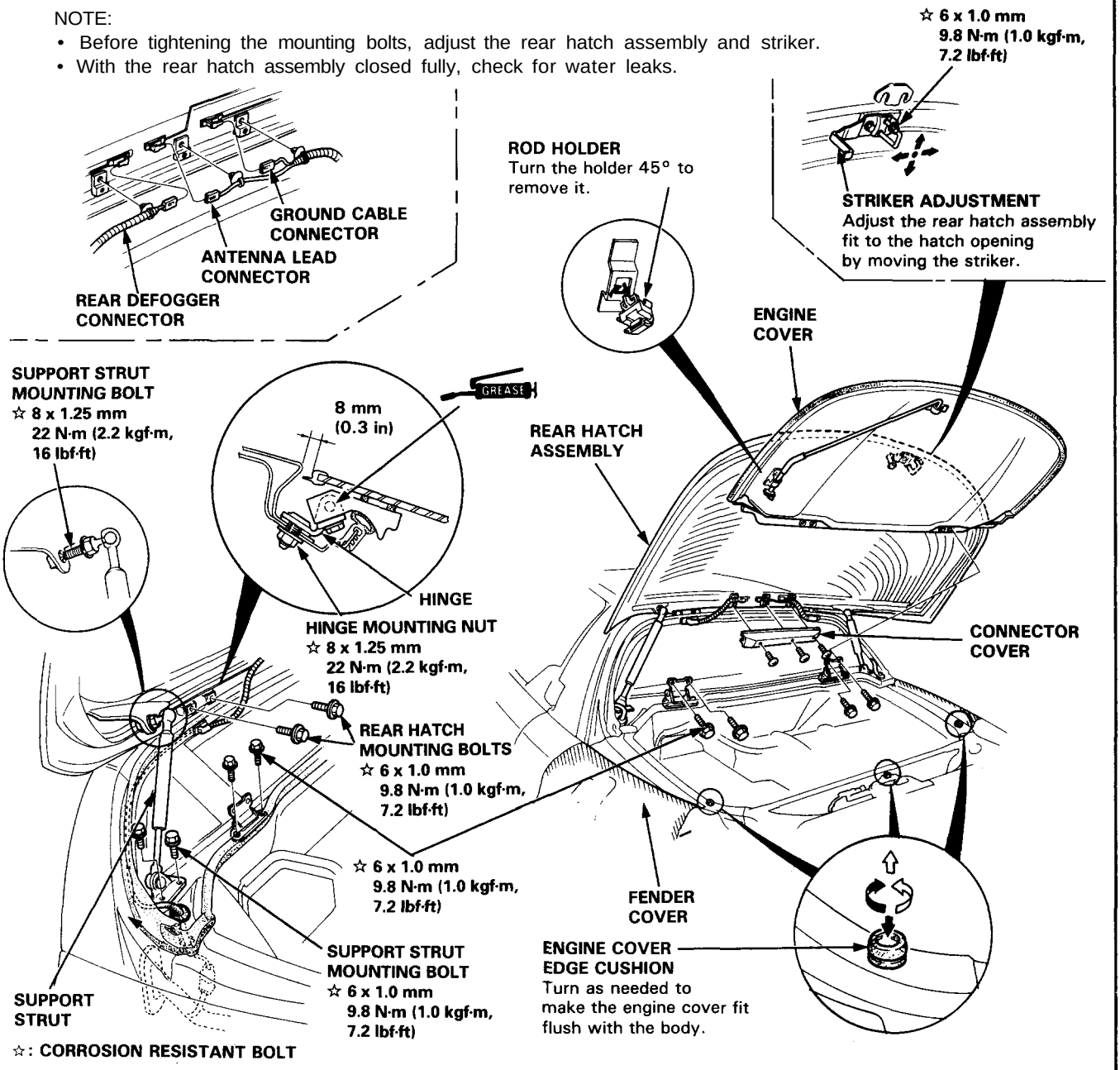

Trunk Lid

Replacement/Adjustment

1. Remove the mounting screws, then remove the rear hatch air scoop.
2. Disconnect the high-mount brake light harness connector, and remove the harness clamp from the support strut.
3. Remove the trunk lid by removing the trunk lid mounting bolts.
4. Installation is the reverse of the removal procedure.

   NOTE:
   - Make sure the high-mount brake light connector is connected properly.
   - Adjust the trunk lid alignment.

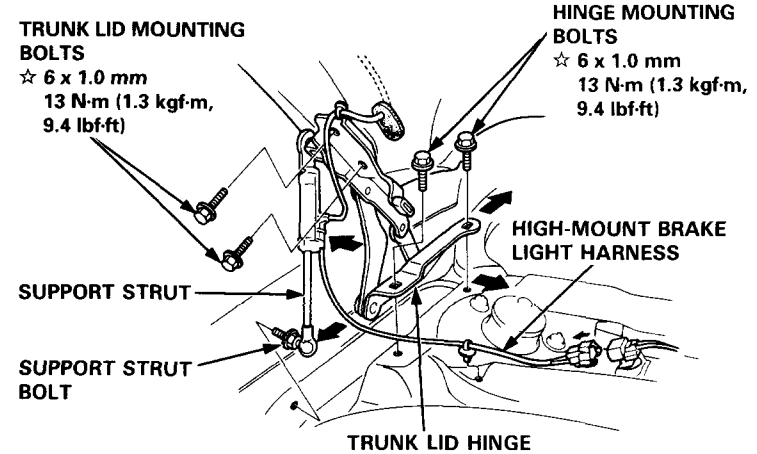

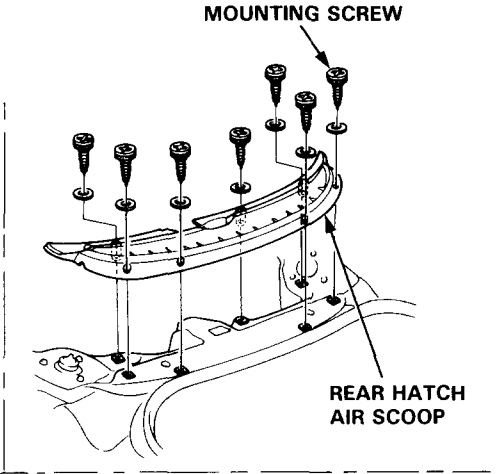

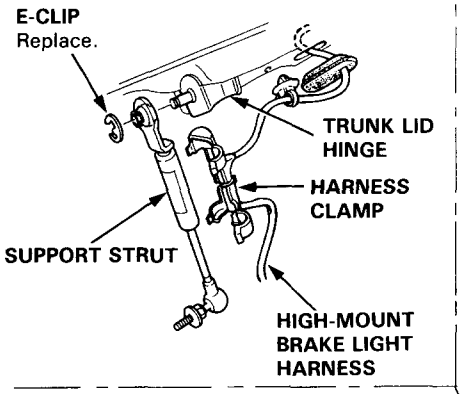

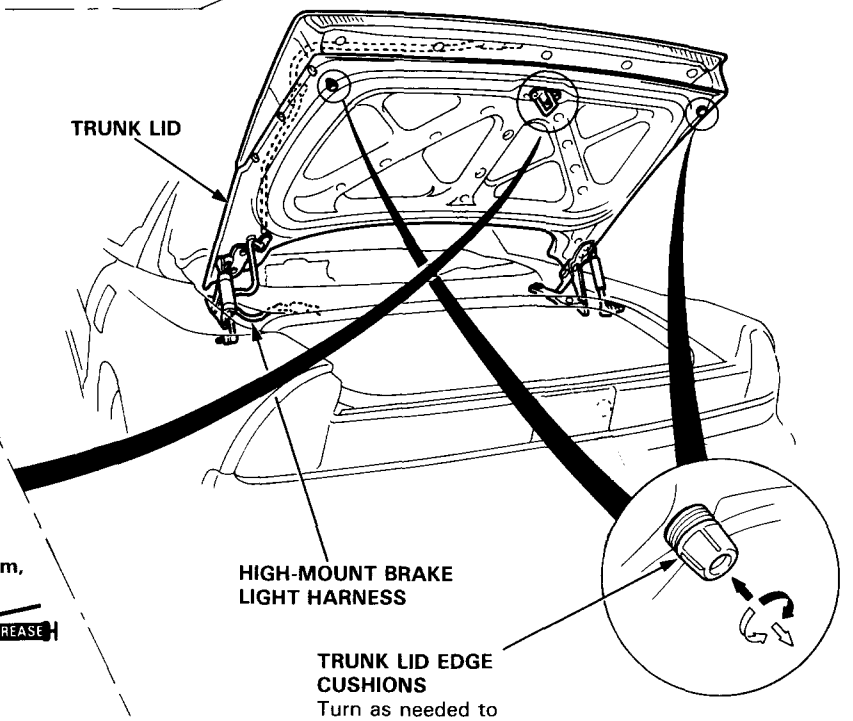

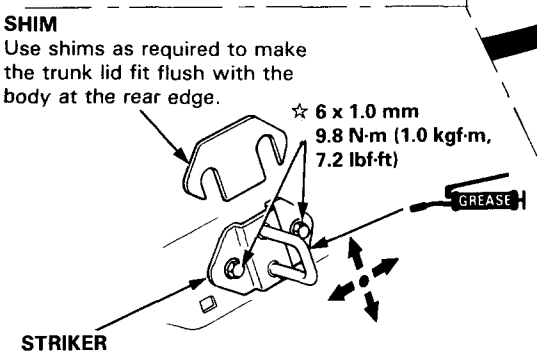

☆: CORROSION RESISTANT BOLT

Trunk Lid Spoiler/Trunk Trim Panel

Replacement

NOTE:
- Take care not to scratch the trunk lid.
- Take care not to bend or scratch the trim panels.

CAUTION: When prying with a flat tip screwdriver, wrap it with protective tape or a shop towel to prevent damage.

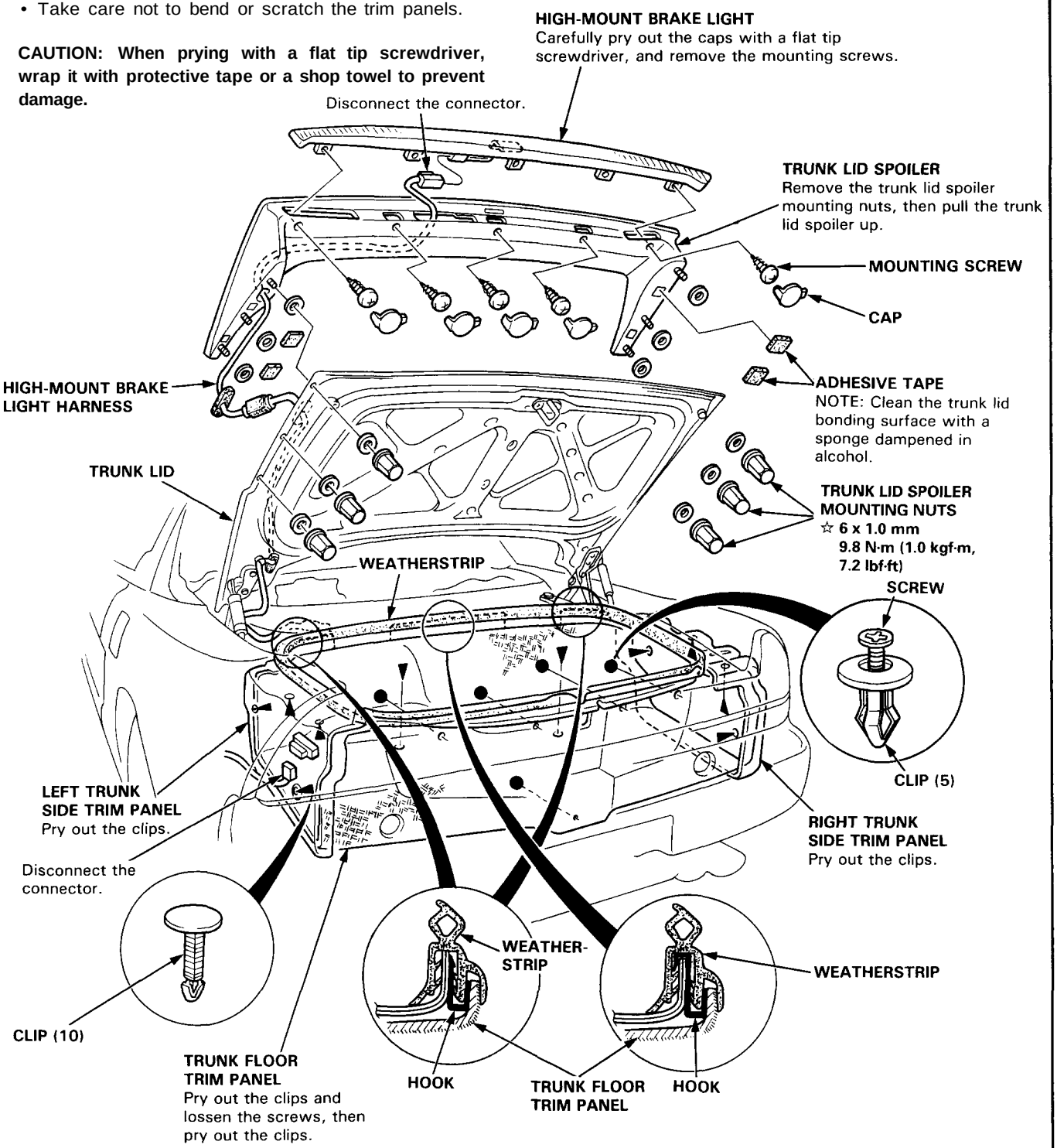

Installation is the reverse of the removal procedure.

NOTE:
- If necessary, replace any damaged clips.
- Make sure the connector is connected properly.

☆: **CORROSION RESISTANT NUT**

Opener Cables

Replacement

1. Remove the openers and latches, then disconnect the opener cables.
2. Remove the fuel lid latch.
3. Remove the opener cables by removing the clips as shown.

   NOTE:
   - Before pulling out the opener cables, tie a string to the opener cable so you can pull it back in later.
   - Take care not to bend the opener cables.

4. Installation is the reverse of the removal procedure.

   NOTE:
   - Make sure the opener cables are routed and connected properly.
   - If necessary, adjust the opener cables by changing the position of the cable housing.
   - If necessary, replace any damaged clips.

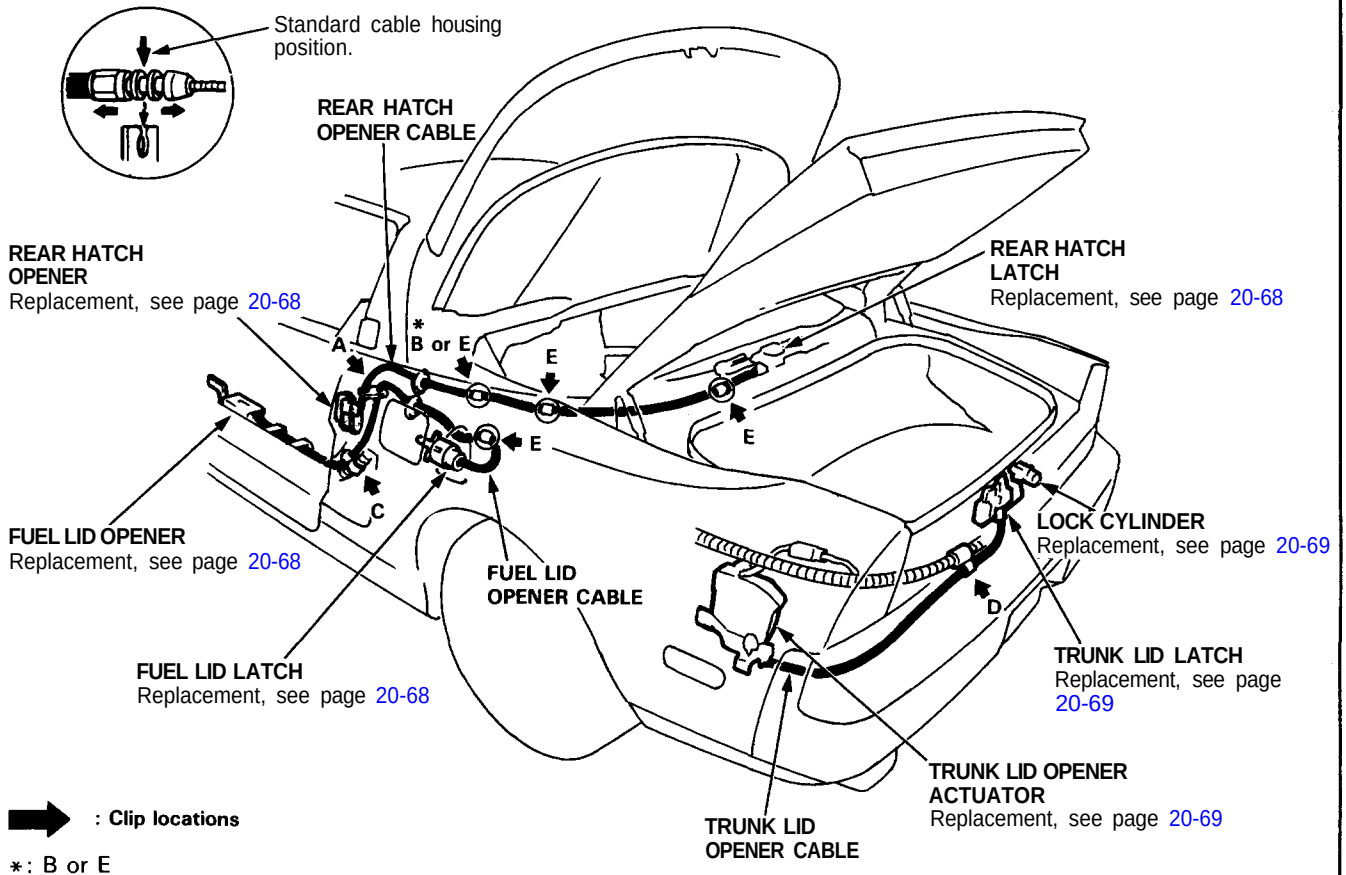

*: B or E
B: coupe
E: NSX-T (open top)

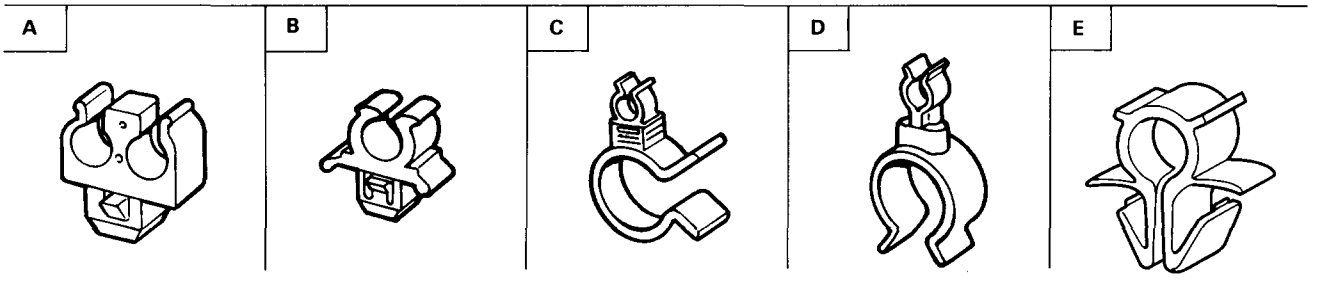

Opener/Latch

Replacement

NOTE: Take care not to bend the cables.

Rear Hatch Opener/Latch:

REAR HATCH OPENER CABLE
Disconnect the rear hatch opener cable.
Replacement, see page 20-67

MOUNTING BOLTS
☆ 6 x 1.0 mm
9.8 N·m (1.0 kgf·m, 7.2 lbf·ft)

OPENER

HANDLE ROD

LATCH SWITCH
Be careful not to damage the latch switch. Disconnect the latch switch connector.

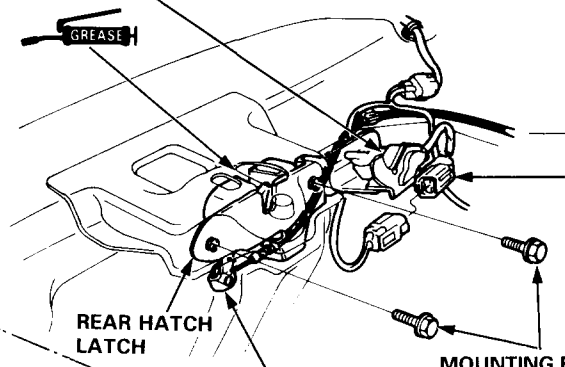

LATCH SWITCH CONNECTOR

REAR HATCH LATCH

MOUNTING BOLTS
☆ 6 x 1.0 mm
9.8 N·m (1.0 kgf·m, 7.2 lbf·ft)

REAR HATCH OPENER CABLE
Disconnect the rear hatch opener cable.

Coupe:

NSX-T (open top):

RETAINER CLIP

RETAINER CLIP

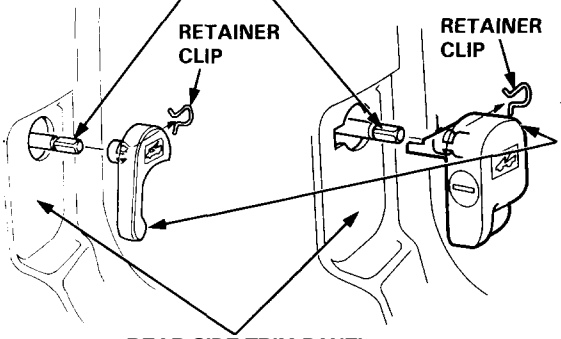

RELEASE HANDLE
Pull out the retainer clip, then remove the release handle and rear side trim panel.

REAR SIDE TRIM PANEL
Removal, see page 20-38

FUEL LID
After installing, check for a flush fit with the body.

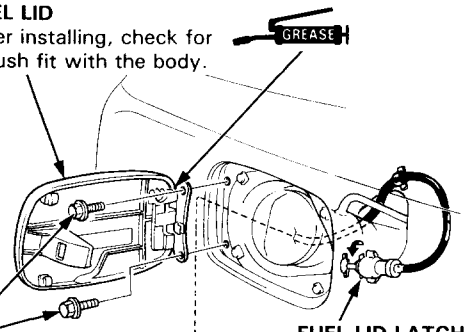

MOUNTING BOLTS
☆ 6 x 1.0 mm
13 N·m (1.3 kgf·m, 9.4 lbf·ft)

FUEL LID LATCH
Lower the rear inner fender and remove the fuel lid latch by turning it 90°.

Fuel Lid Opener/Latch:

FUEL LID OPENER CABLE

MOUNTING BOLTS
☆ 6 x 1.0 mm
9.8 N·m (1.0 kgf·m, 7.2 lbf·ft)

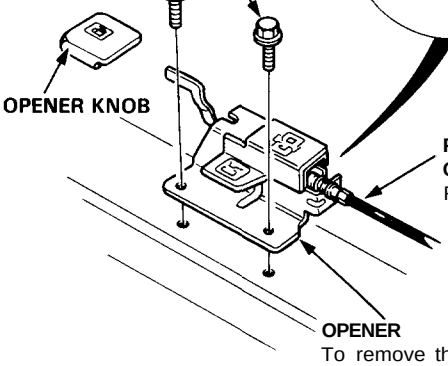

OPENER KNOB

FUEL LID OPENER CABLE
Replacement, see page 20-67

OPENER
To remove the opener, pull out the opener knob and remove the side sill pad and trim (see page 20-38).

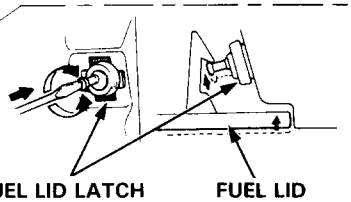

FUEL LID LATCH

FUEL LID

Push and turn the fuel lid latch to make the fuel lid fit flush with the body.

Trunk Lid Opener/Latch:

NOTE: Take care not to bend the cable and rod.

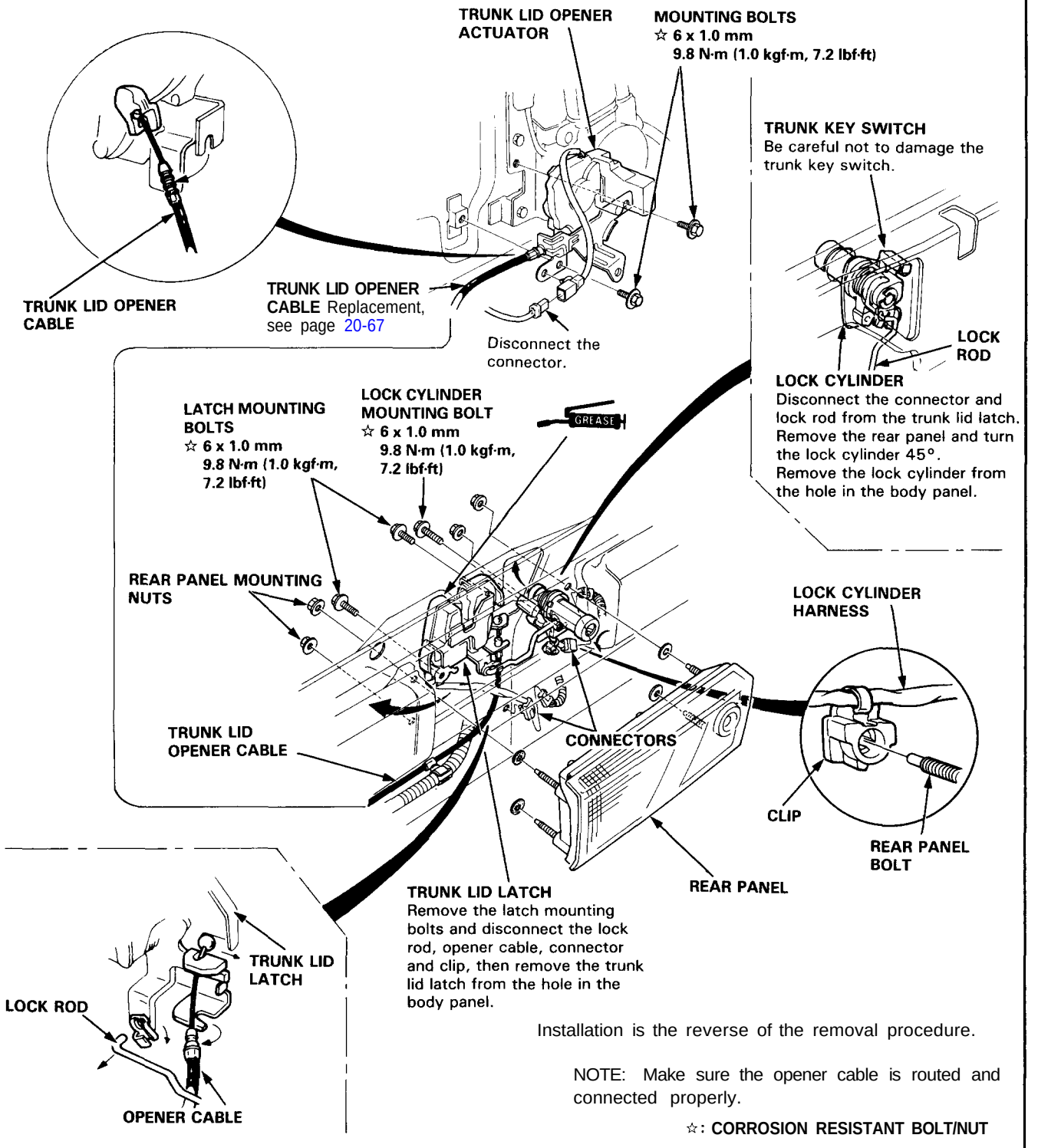

Installation is the reverse of the removal procedure.

NOTE: Make sure the opener cable is routed and connected properly.

☆: **CORROSION RESISTANT BOLT/NUT**

Side Air Scoop/Side Sill Panel/Side Step Panel

Replacement

CAUTION: When prying with a flat tip screwdriver, wrap it with protective tape or a shop towel to prevent damage.

NOTE:
- Take care not to scratch the body and related parts.
- Do not drop the special mounting nuts inside the body.

Disassemble in numbered sequence.

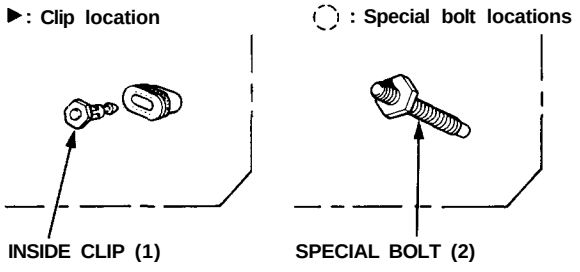

Side air scoop removal:

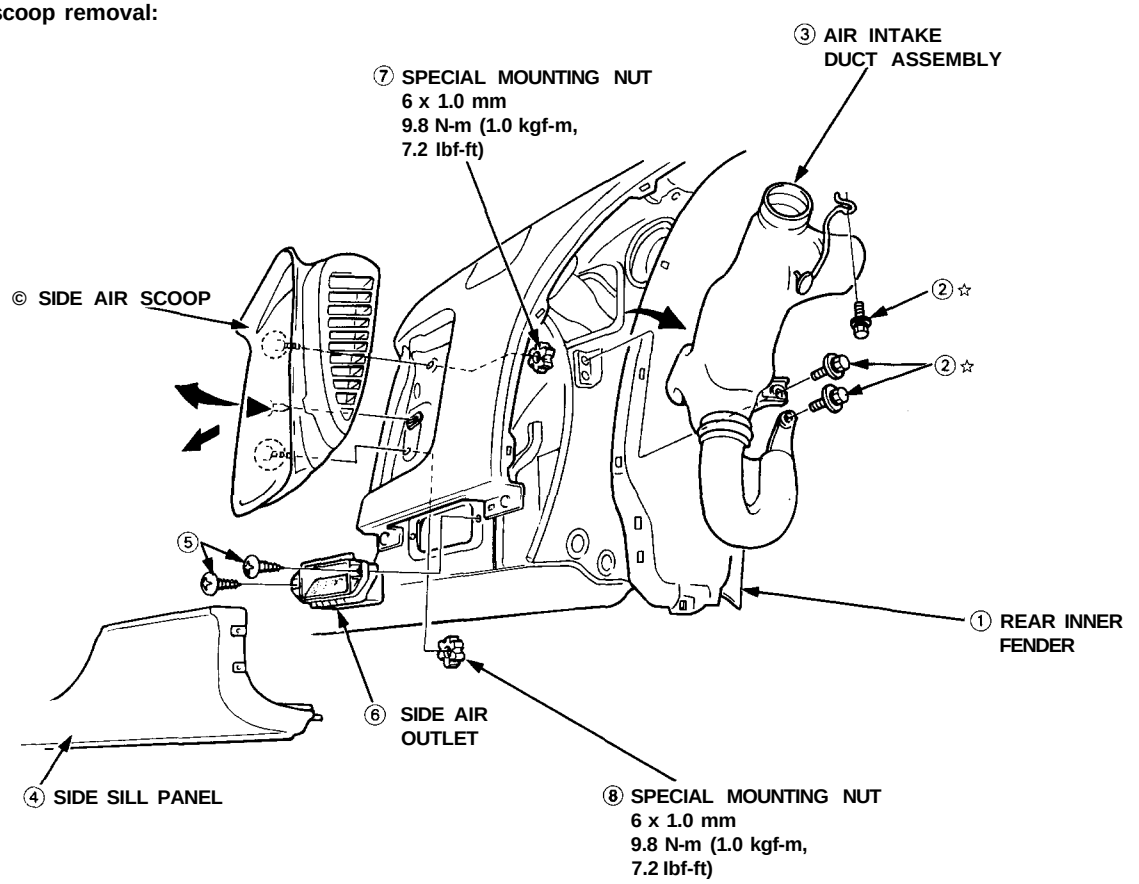

☆: CORROSION RESISTANT BOLT

NOTE:
- Take care not to twist the side sill panel.
- Take care not to scratch the body and related parts.

Disassemble in numbered sequence.

▶: Clip locations

A

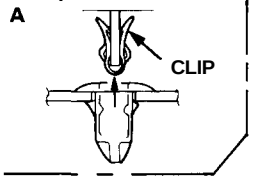

B

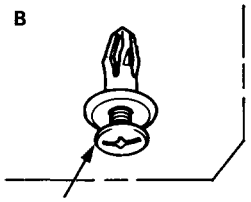

NOTE: Loosen the screw, then remove the clip using a clip remover.

○: Clip locations

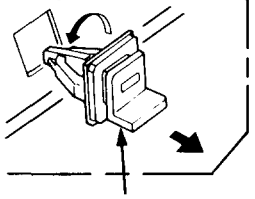

SIDE CLIP (9)
Remove the clips by turning them 45°.

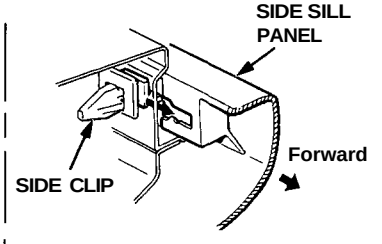

NOTE: When removing the side sill panel, the clips will stay in the body.

Side sill panel and side step panel removal:

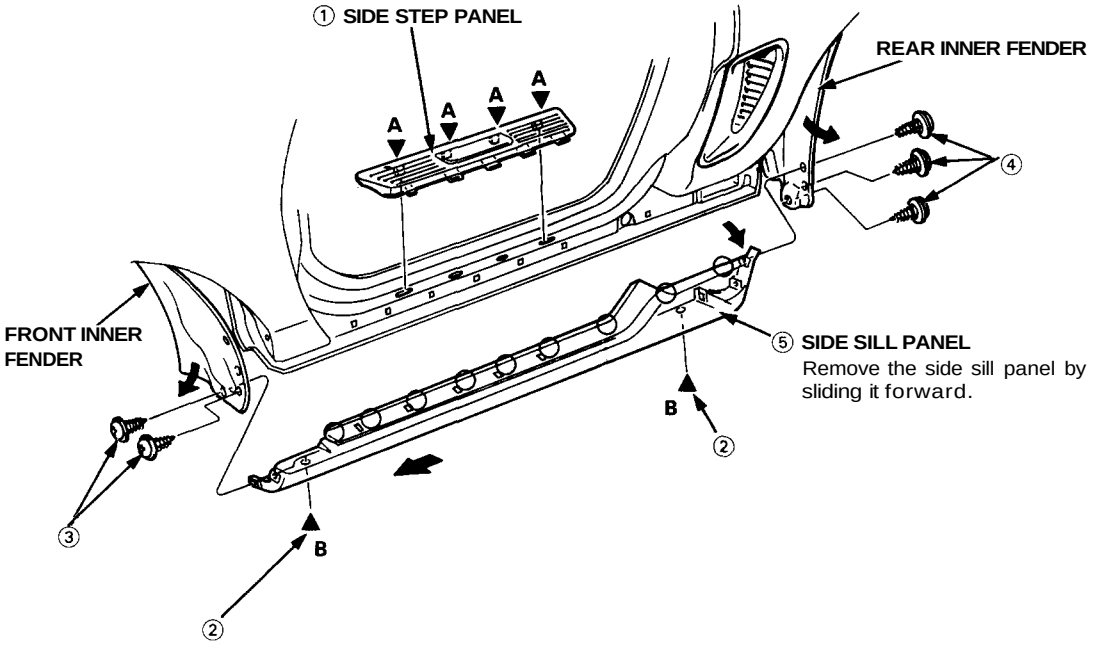

To install the side sill panel, remove the clips from the body, install them on the panel, then install the panel on the car.

NOTE: If necessary, replace any damaged clips.

Front Sub-frame/Battery, Spare Tire Holder

Sub-frame torque value specifications:

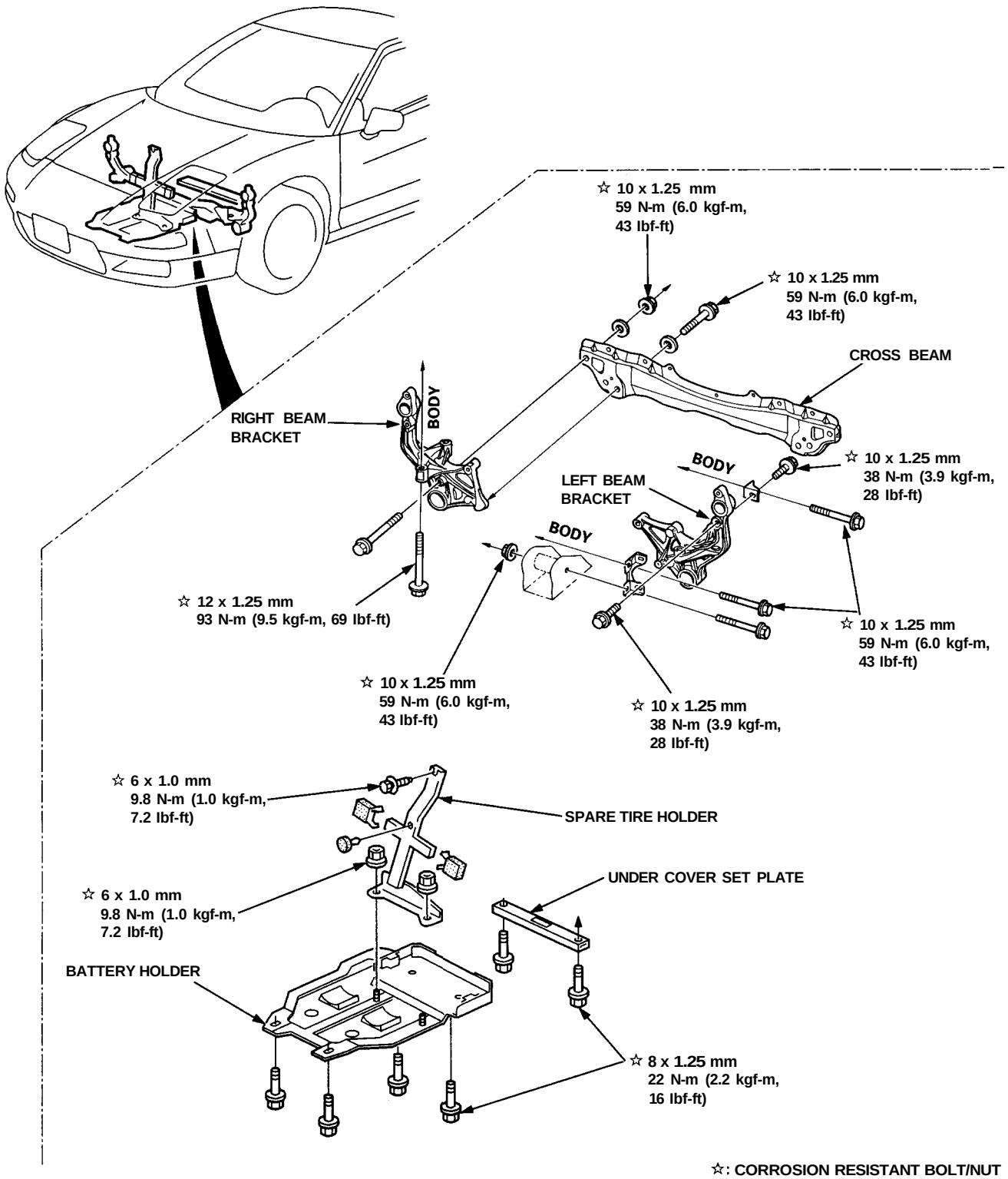

☆: CORROSION RESISTANT BOLT/NUT

Rear Sub-frame

Sub-frame torque value specifications:

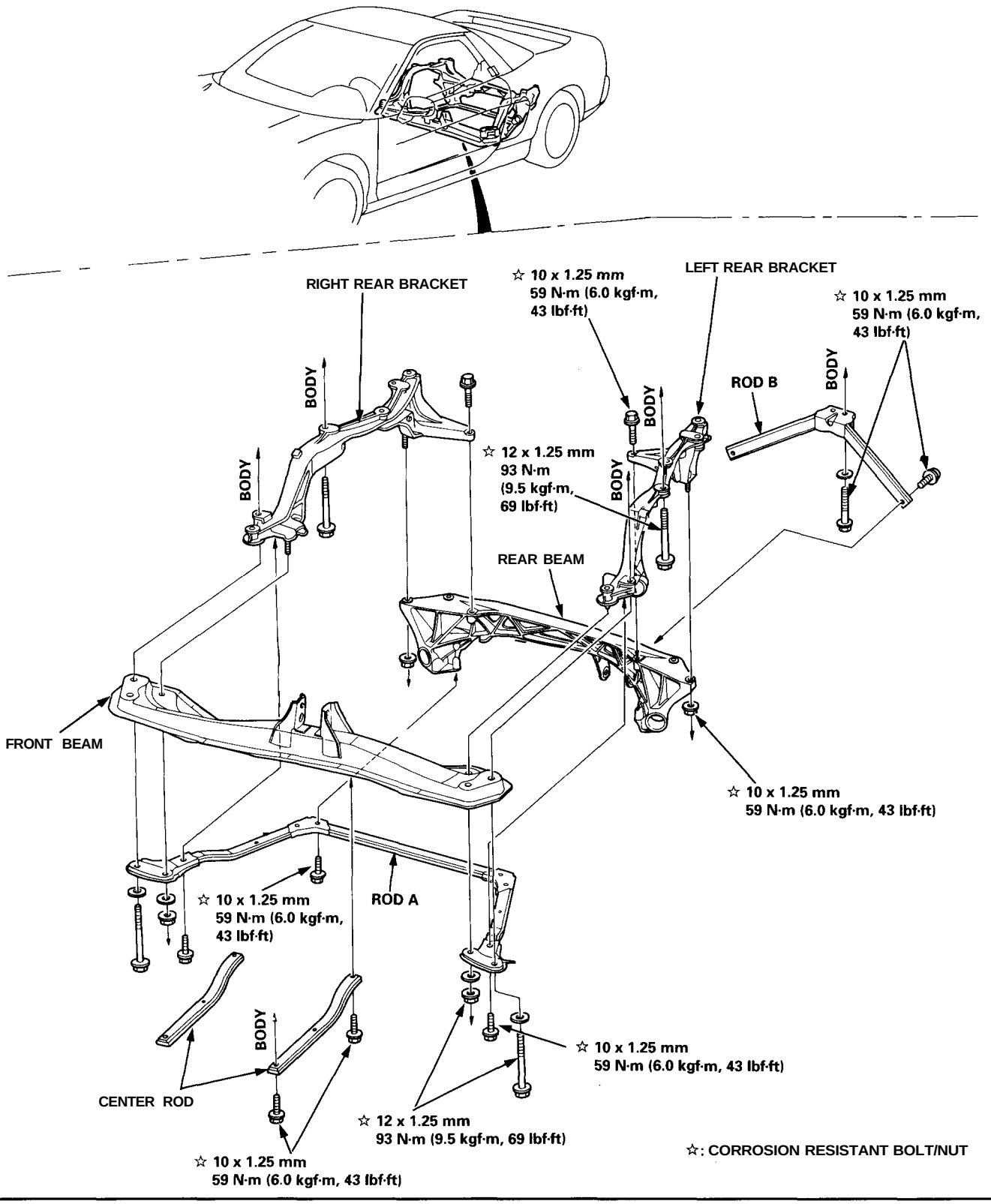

Frame Repair Chart

Unit: mm (in)

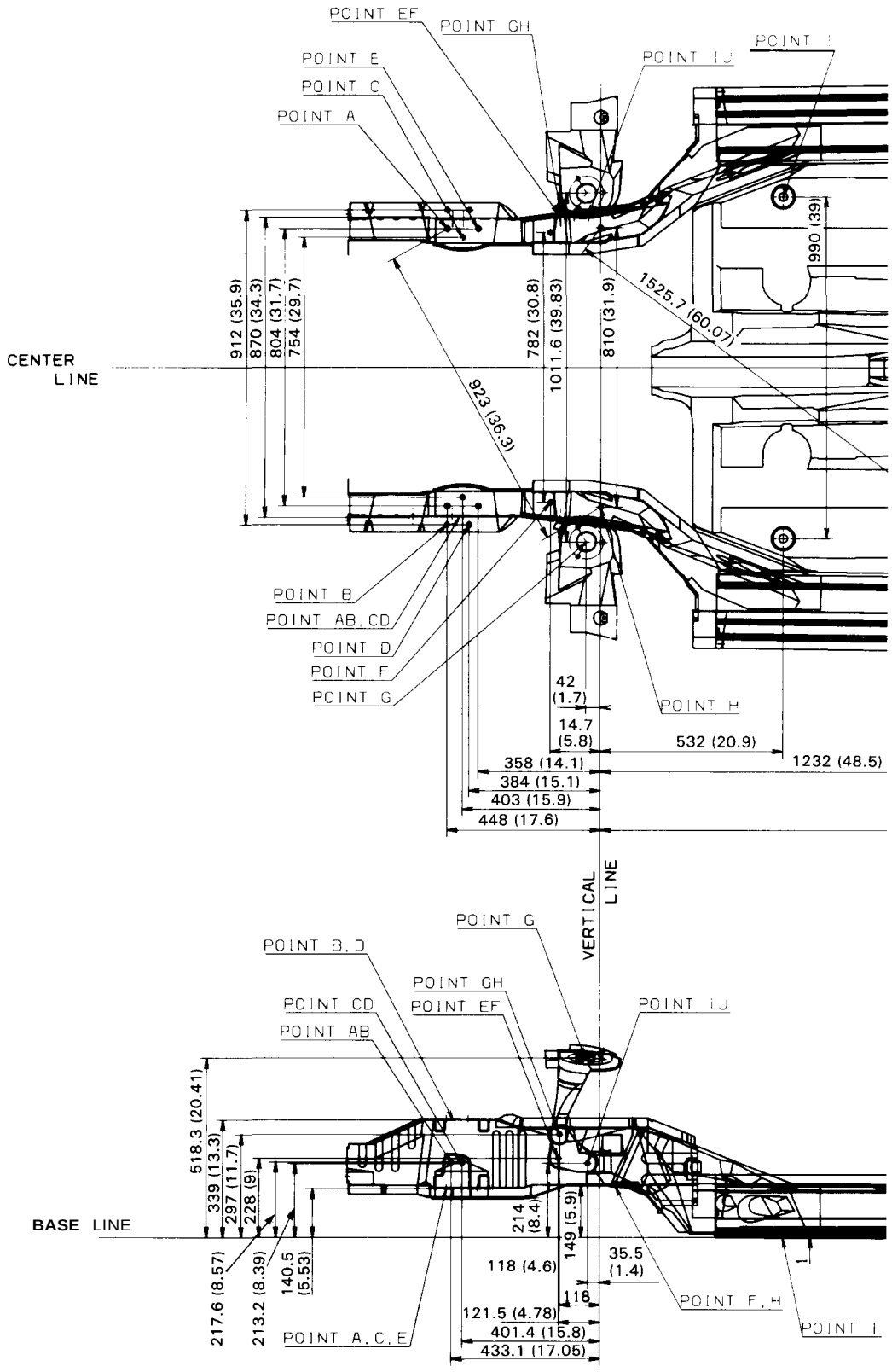

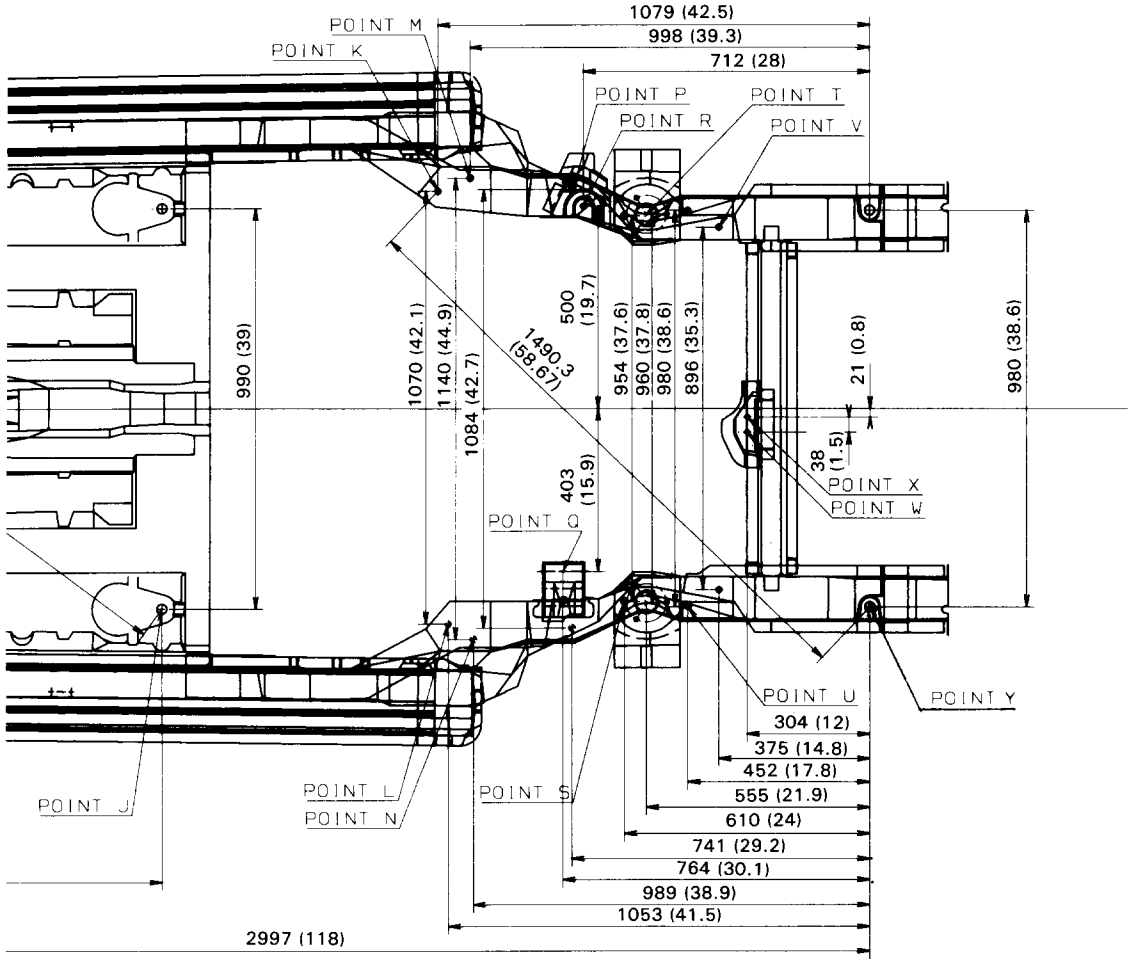
POINT M
POINT K
1079 (42.5)
998 (39.3)
712 (28)
POINT P
POINT R
POINT T
POINT V
990 (39)
1070 (42.1)
1140 (44.9)
1084 (42.7)
1490.3 (58.67)
500 (19.7)
954 (37.6)
960 (37.8)
980 (38.6)
896 (35.3)
21 (0.8)
980 (38.6)
38 (1.5)
403 (15.9)
POINT X
POINT W
POINT Q
POINT U
POINT Y
304 (12)
375 (14.8)
452 (17.8)
555 (21.9)
610 (24)
741 (29.2)
764 (30.1)
989 (38.9)
1053 (41.5)
2997 (118)
POINT J
POINT L
POINT N
POINT S

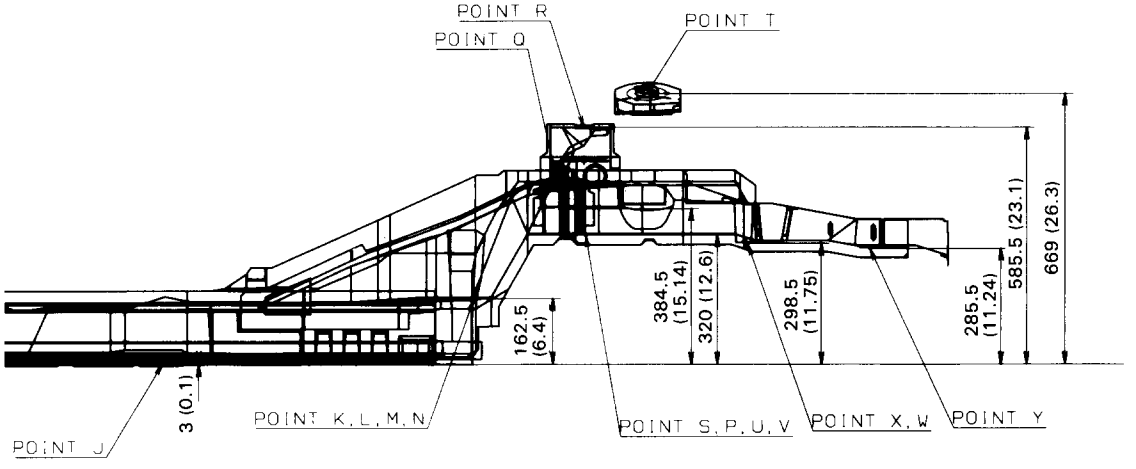
POINT R
POINT Q
POINT T
669 (26.3)
585.5 (23.1)
285.5 (11.24)
384.5 (15.14)
320 (12.6)
298.5 (11.75)
162.5 (6.4)
3 (0.1)
POINT J
POINT K,L,M,N
POINT S,P,U,V
POINT X,W
POINT Y

Features

The reinforced parts are located as shown.

: **Reinforced parts.**

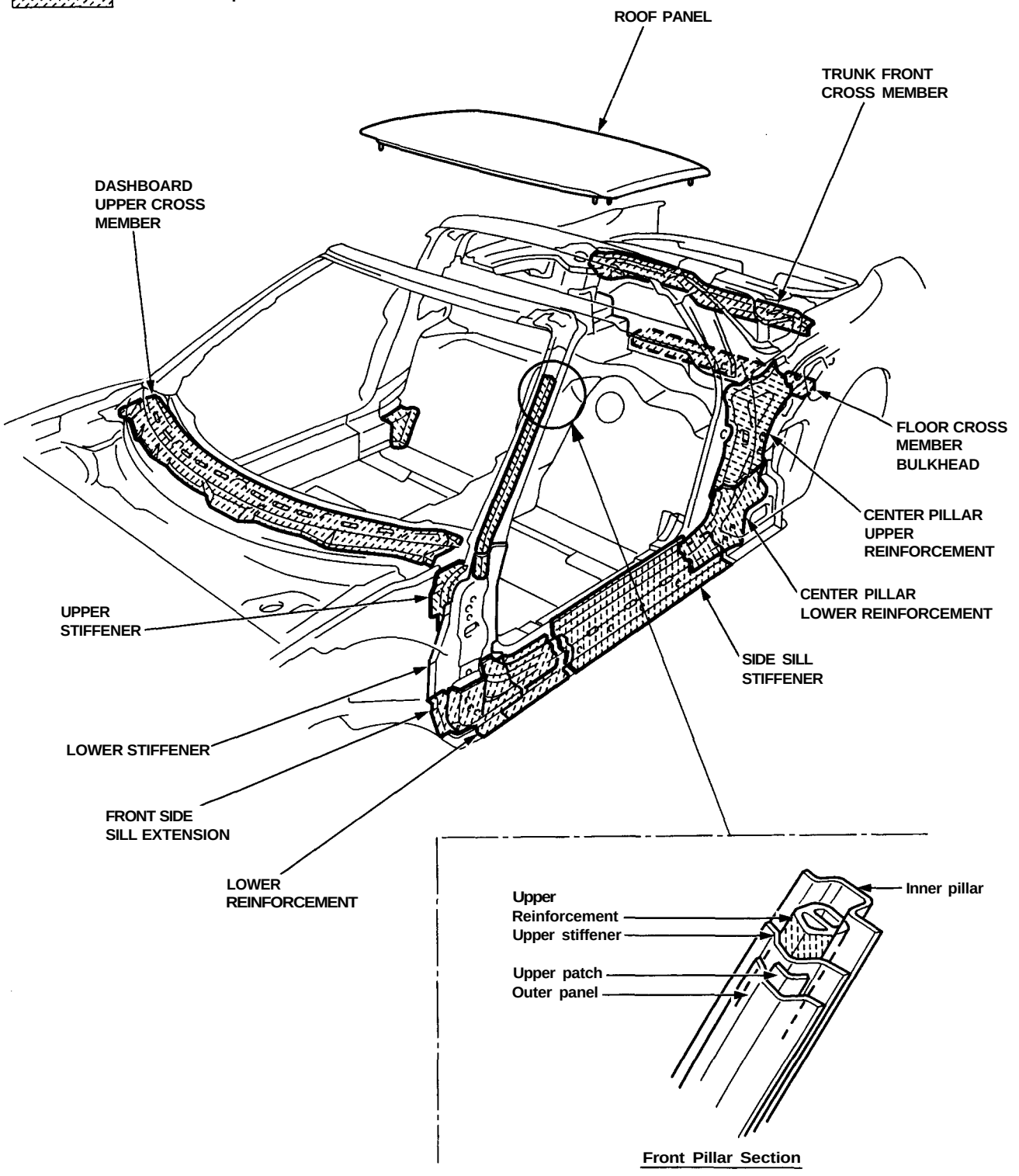

Roof Rail Trim, Front and Rear

Replacement

CAUTION:
- **Wear gloves to remove and install the trim.**
- **When prying with a flat tip screwdriver, wrap it with protective tape to prevent damage.**

NOTE:
- Take care not to scratch the trim.
- Remove the roof.

Front roof rail trim:

1. Remove the sunvisor from each side.

►: Screw location, 4

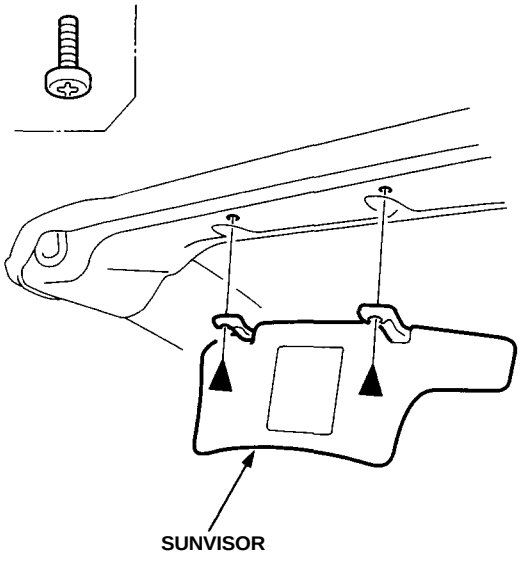

2. Pull away the door trim, then lower the front pillar trim by detaching the clips from each side. Then remove the screws.

►: Screw locations, 4 **▷: Clip locations, 8**

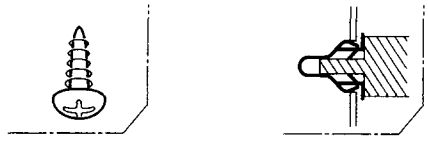

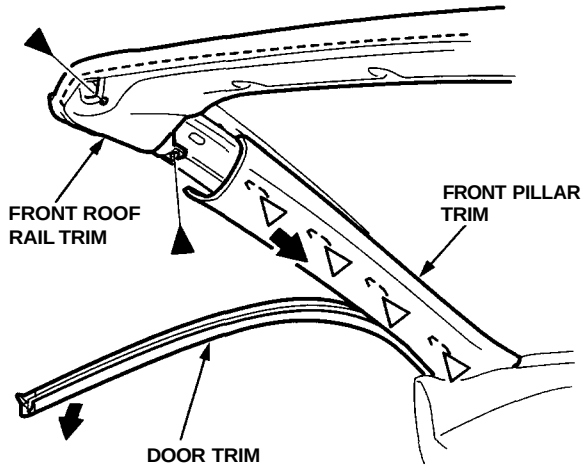

3. Remove the front roof rail trim by sliding it rearward.

▷: Hook locations, 4

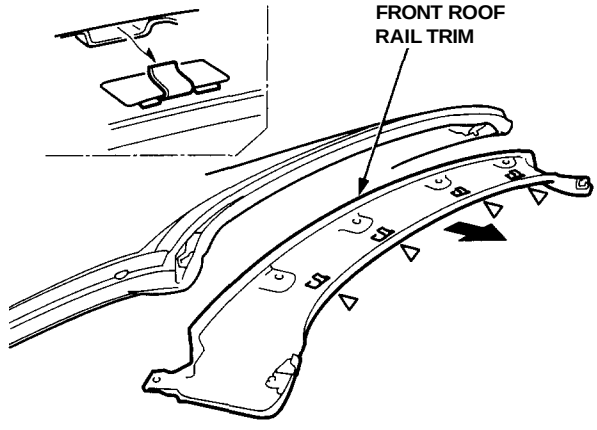

4. Installation is the reverse of the removal procedure.

NOTE:
- If necessary, replace any damaged clips.
- Make sure the door trim is installed securely.

(cont'd)

Roof Rail Trim, Front and Rear

Replacement (cont'd)

Rear roof rail trim:

1. Remove the ceiling light (see section 23).

2. Pull away the door trim, then lower the rear pillar trim by detaching the clips from each side. Then remove the screws.

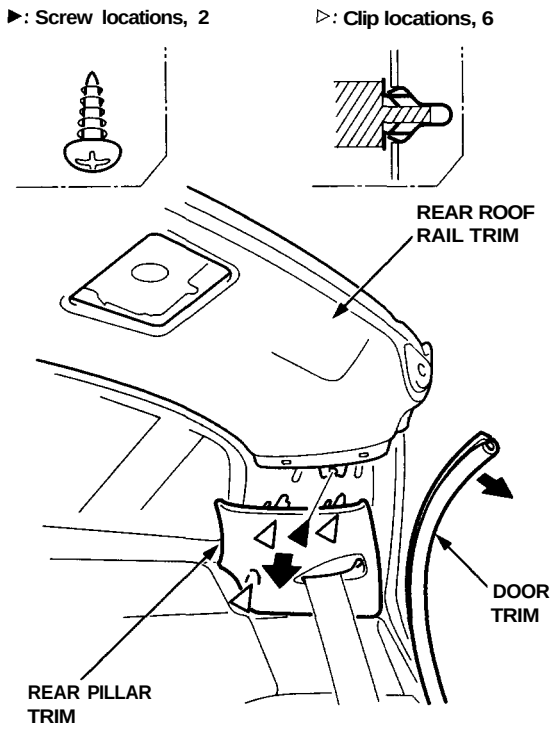

3. Detach the clips, and remove the rear receiver damper from each side.

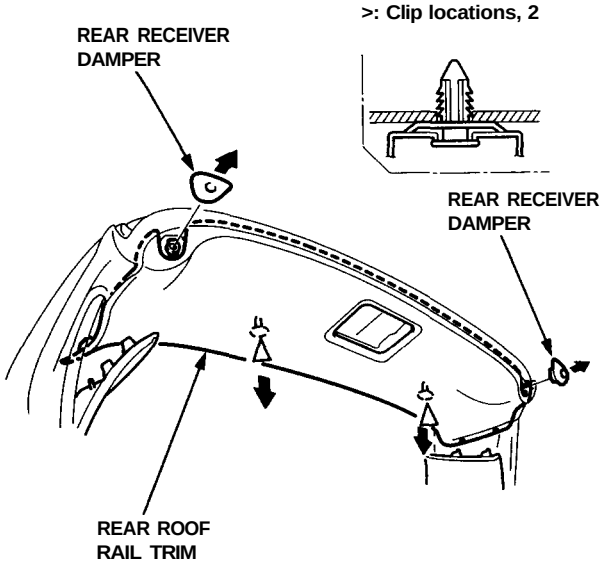

4. Remove the rear roof rail trim by sliding it forward.

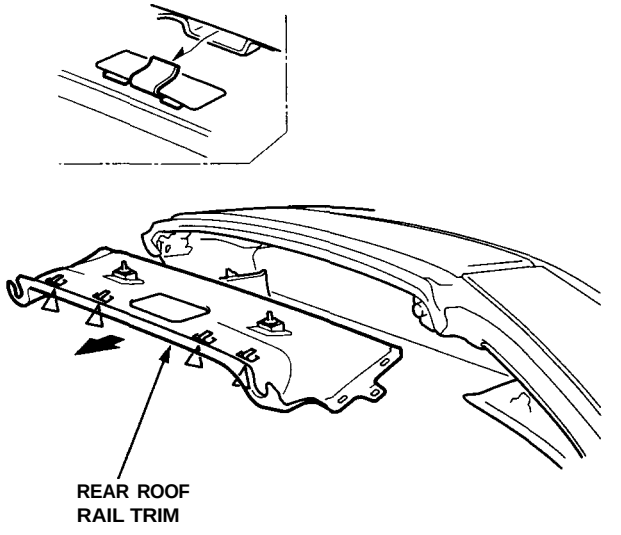

5. Installation is the reverse of the removal procedure.

NOTE:
- If necessary, replace any damaged clips.
- Make sure the door trim is installed securely.

Roof

Index

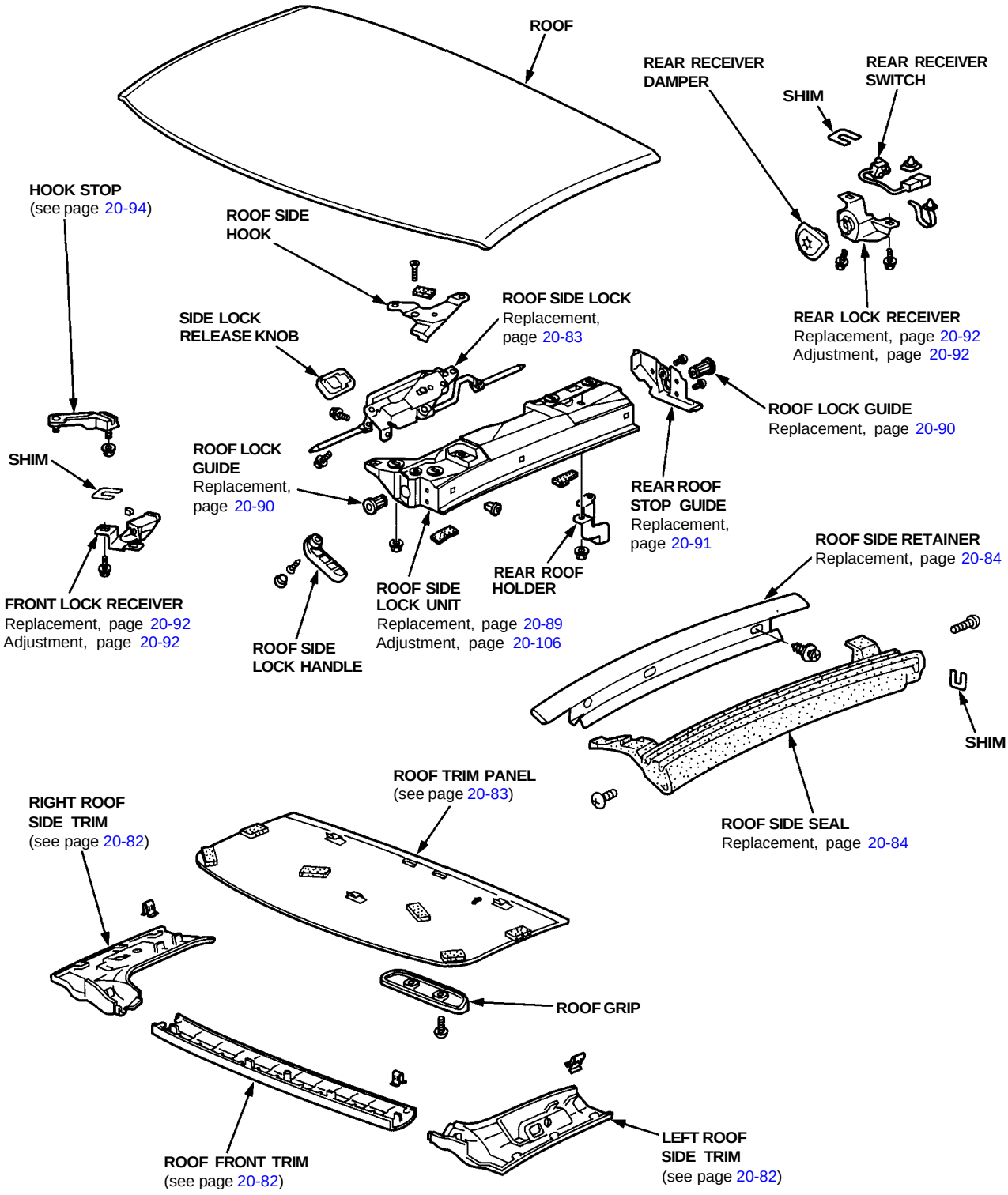
ROOF
REAR RECEIVER DAMPER
REAR RECEIVER SWITCH
SHIM
HOOK STOP (see page 20-94)
ROOF SIDE HOOK
ROOF SIDE LOCK Replacement, page 20-83
SIDE LOCK RELEASE KNOB
REAR LOCK RECEIVER Replacement, page 20-92 Adjustment, page 20-92
ROOF LOCK GUIDE Replacement, page 20-90
SHIM
ROOF LOCK GUIDE Replacement, page 20-90
REAR ROOF STOP GUIDE Replacement, page 20-91
ROOF SIDE RETAINER Replacement, page 20-84
FRONT LOCK RECEIVER Replacement, page 20-92 Adjustment, page 20-92
ROOF SIDE LOCK HANDLE
ROOF SIDE LOCK UNIT Replacement, page 20-89 Adjustment, page 20-106
REAR ROOF HOLDER
SHIM
ROOF TRIM PANEL (see page 20-83)
RIGHT ROOF SIDE TRIM (see page 20-82)
ROOF SIDE SEAL Replacement, page 20-84
ROOF GRIP
ROOF FRONT TRIM (see page 20-82)
LEFT ROOF SIDE TRIM (see page 20-82)

Roof Trim/Panel Replacement

CAUTION:
- **To prevent damage, place the roof on an appropriate pad.**
- **When prying with a flat tip screwdriver, wrap it with protective tape to prevent damage.**

NOTE: Take care not to scratch the trim, panel and roof.

1. Remove the roof.

2. Remove the roof front trim.

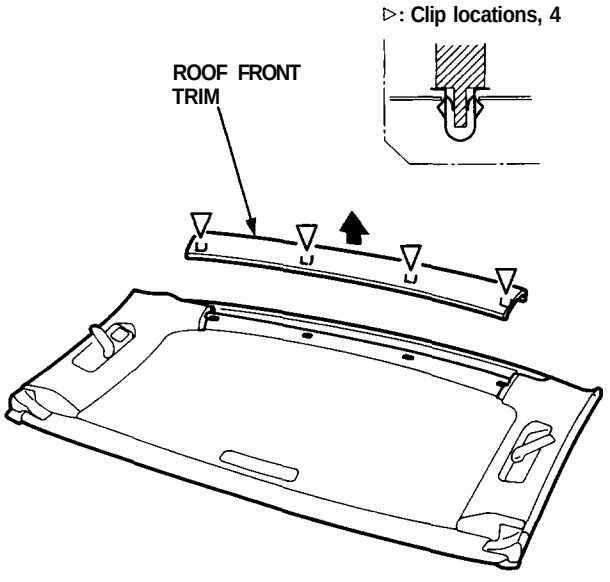

3. Remove the roof side lock handle from each side.

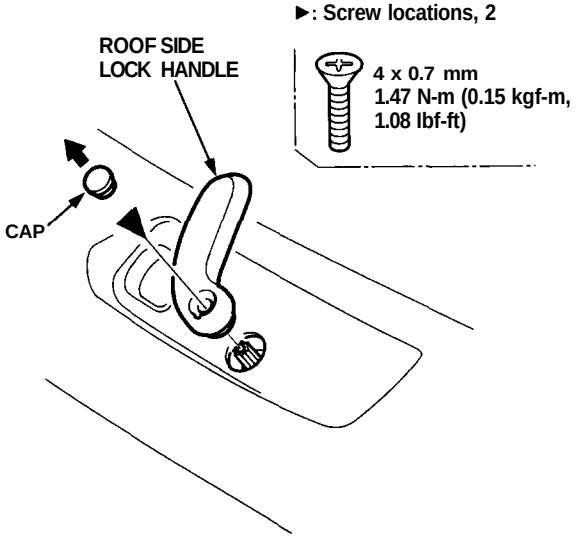

4. Remove the roof side trim from each side.

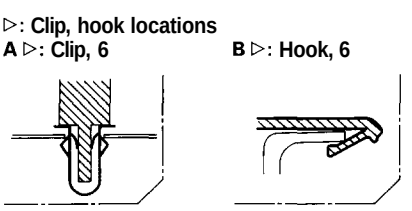

NOTE: Do not snap the hooks.

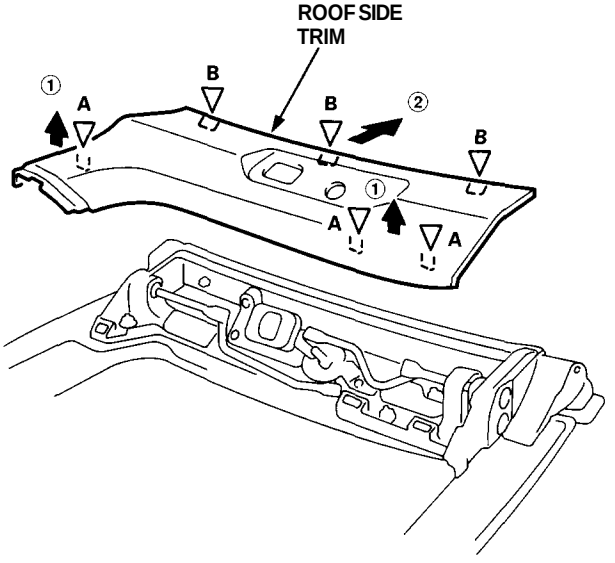

5. Remove the roof grip.

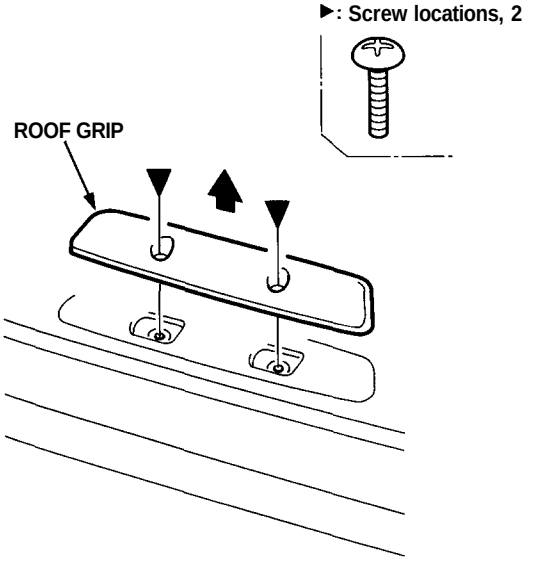

6. Move the rear roof stop guide on each side as shown.

NOTE: Do not disturb the bonded portion of the roof side seal.

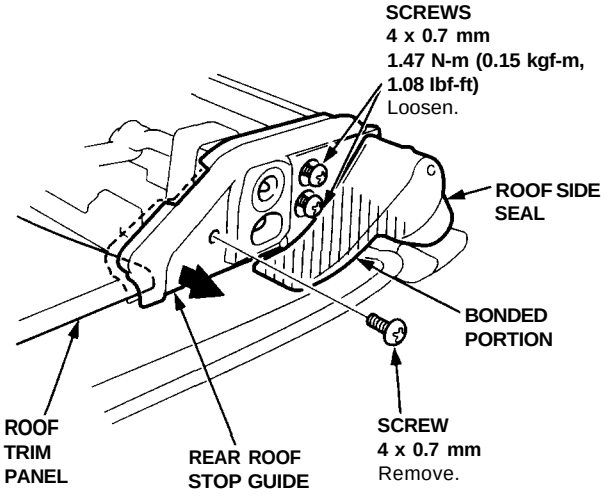

7. Detach the hooks by sliding the roof trim panel back, then remove it.

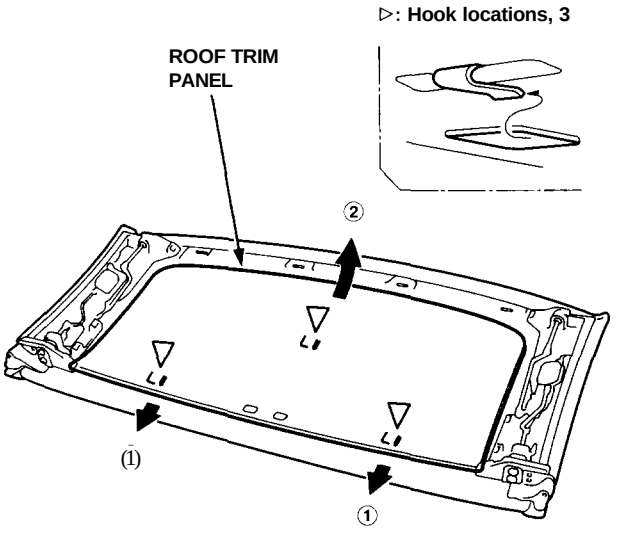

8. Installation is the reverse of the removal procedure.

NOTE: If necessary, replace any damaged clips.

Roof Side Lock Replacement

CAUTION: To prevent damage, place the roof on an appropriate pad.

1. Remove the roof.
2. Remove the roof front trim and roof side trim (see page 20-82).
3. Install the roof side lock handle.
4. Turn the roof side lock handle, then remove the screws.

►: Screw locations, 3



5 x 0.8 mm
4.9 N·m (0.5 kgf·m, 3.6 lbf·ft)

Apply liquid thread lock.

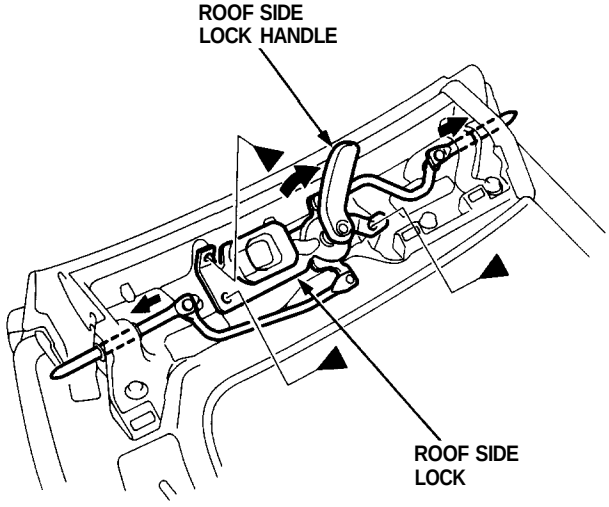

5. Return the roof side lock handle to the unlocked position, then remove it.

(cont'd)

Roof Side Lock Replacement (cont'd)

6. Move the roof side lock, then pull the lock pins out and remove the lock.

   NOTE: Take care not to bend the rods and lock pins.

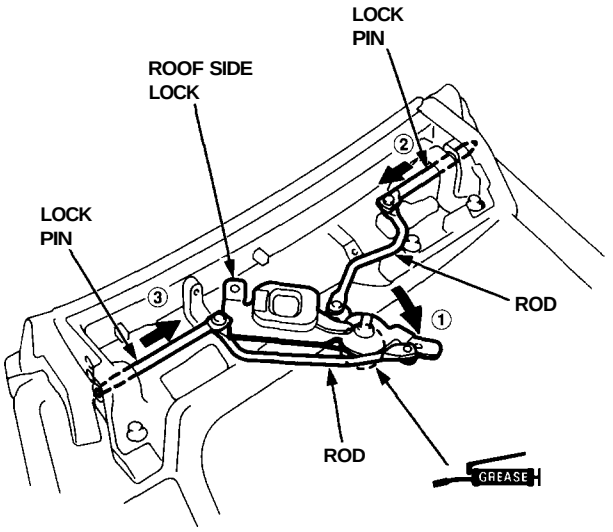

7. Installation is the reverse of the removal procedure.

   NOTE:
   - Grease the location indicated by the arrow and the lock pins.
   - Make sure the roof side lock works smoothly.

Roof Side Seal/Retainer Replacement

CAUTION: To prevent damage, place the roof on an appropriate pad.

1. Remove the roof.
2. Remove the roof front trim and roof side trim (see page 20-82).
3. Remove the screws from each end of the roof side seal.

►: Screw locations
A►, 2 B►, 2

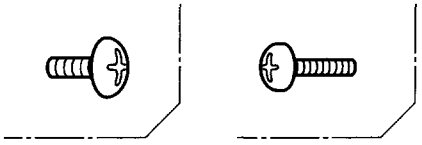

Front:

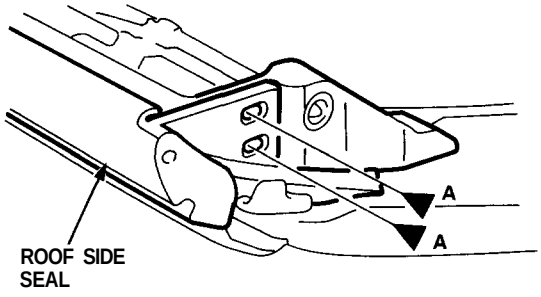

Rear:

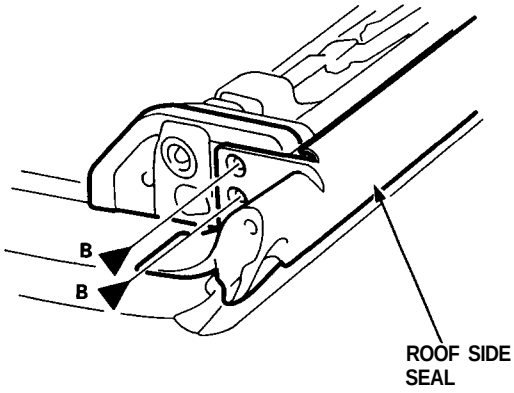

4. Remove the bonded portion of the roof side seal from one end, then pull the seal away from the roof side retainer, and remove the bonded portion from the other end.

NOTE:
- If the old roof side seal is to be reinstalled, take care not to damage it.
- If the roof side seal is damaged, replace it with new one.
- When removing the bonded portions of each roof side seal, remove them gradually.

Rear:

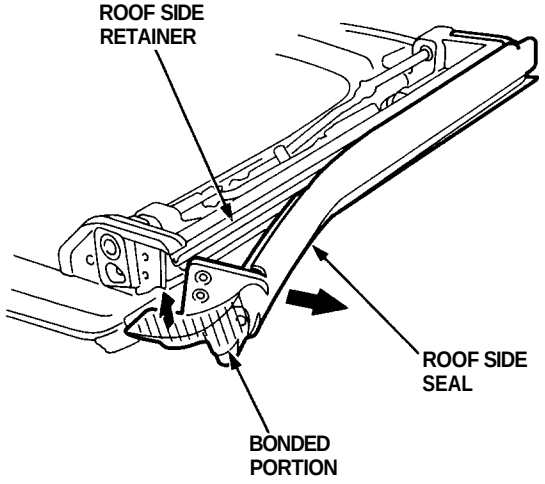

Front:

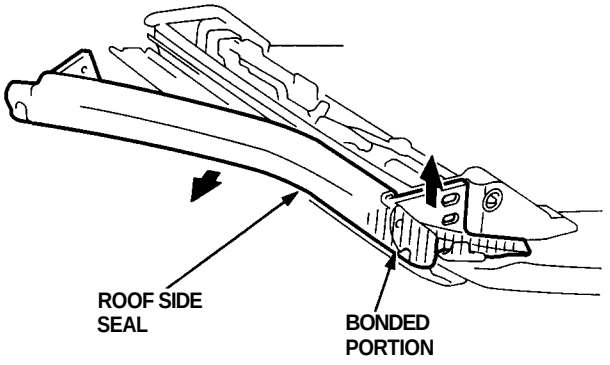

5. Remove the screws, then remove the roof side retainer.

►: Screw locations, 3

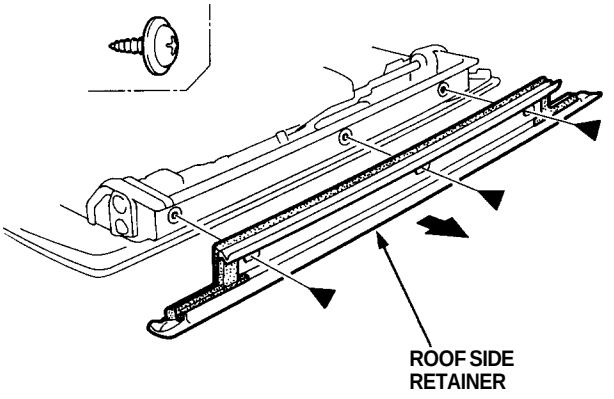

6. Scrape the old sealant and EPT sealer from the roof bonding surfaces with a putty knife.

NOTE: Do not scrape down to the painted surfaces of the roof.

7. Clean the roof bonding surfaces with a sponge dampened in alcohol.

NOTE: After cleaning, keep oil, grease and water from getting on the surface.

8. If the old roof side retainer is to be reinstalled, use a putty knife to scrape off all traces of old sealant and the EPT sealer, then clean the roof side retainer surface with alcohol where new sealant and EPT sealer are to be applied.

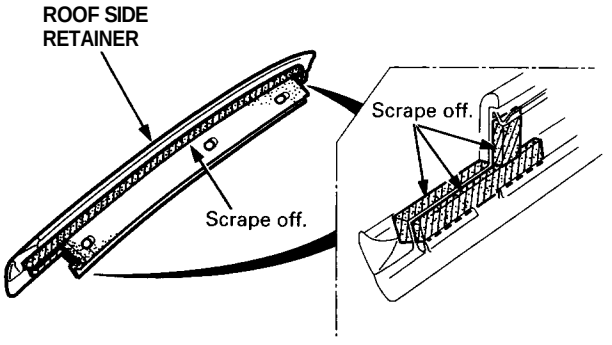

(cont'd)

Roof Side Seal/Retainer Replacement (cont'd)

9. If the old roof side retainer is to be reinstalled, glue the new EPT sealer to it as shown.

NOTE: Be careful not to touch the roof side retainer where the EPT sealer will be applied.

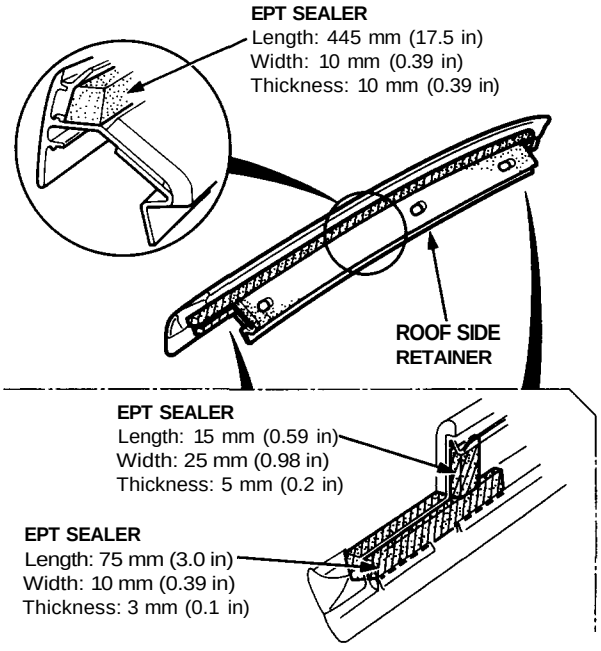

10. If the old roof side seal is to be reinstalled, scrape the old butyl tape from each end of it, then clean each end with alcohol. Glue the new butyl tape on each end as shown.

Butyl tape thickness: 0.5 mm (0.02 in)

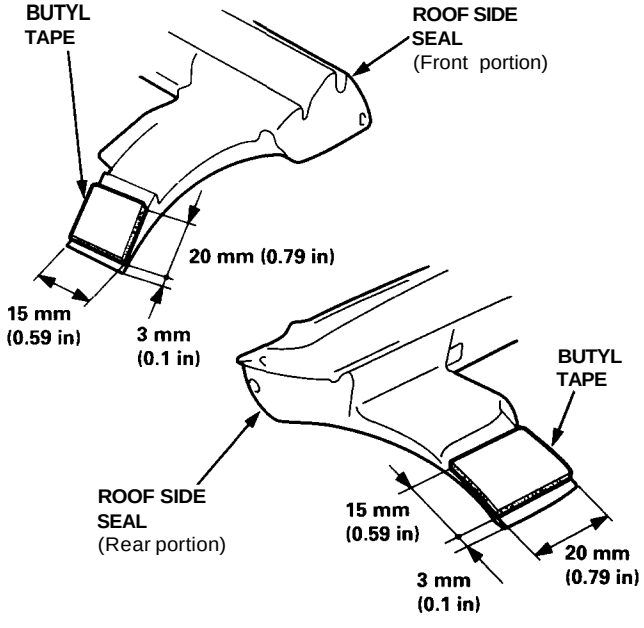

11. Install the roof side retainer.

NOTE:
- Be careful not to touch the roof side retainer where sealant will be applied.
- Align each end of the roof side retainer with the roof corner edges.

►: Screw locations, 3

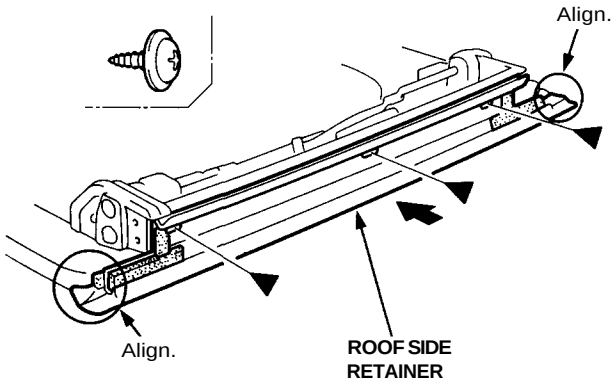

12. Glue the new EPT sealer on the roof as shown.

EPT sealer thickness: 3.0 mm (0.12 in)

Front:

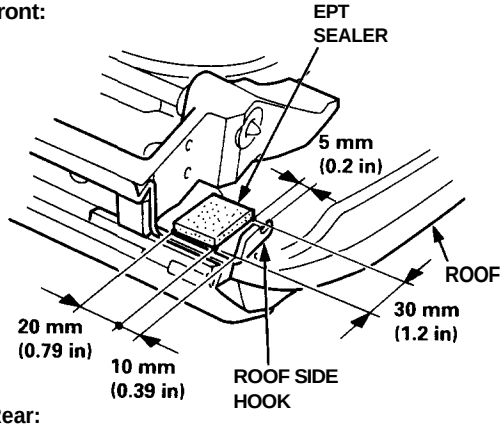

Rear:

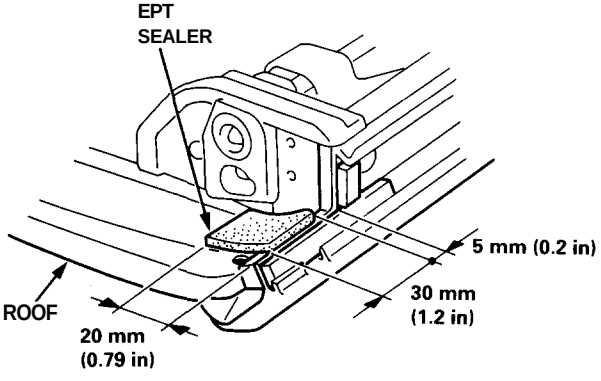

13. Apply new sealant to the roof and roof side retainer as shown.

: Sealant locations
(Cemedine P/N 08712 - 0004, or equivalent)

Front:

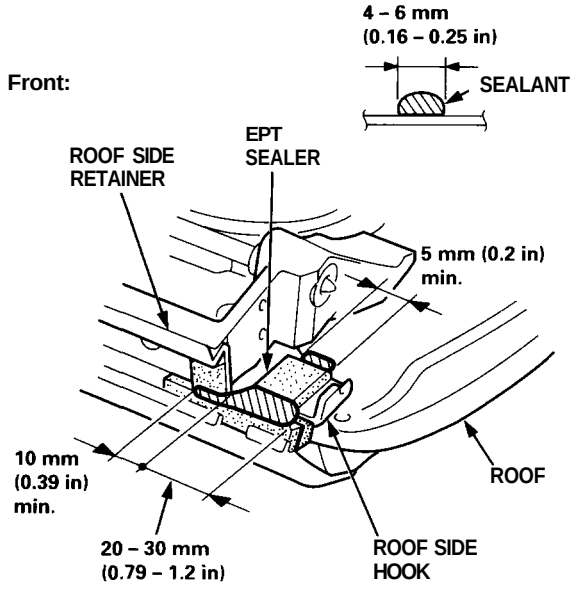

Rear:

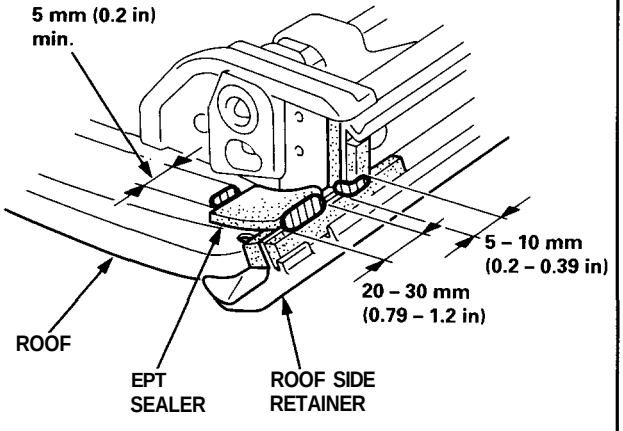

14. Engage the lip of the roof side seal with the groove of the roof side retainer as shown, then gently set each end of the roof side seal down on the sealant.

NOTE:
- Do not press on the seal yet to make the adhesive stick.
- Remove the separator from the butyl tape on each end of the roof side seal.

Front:

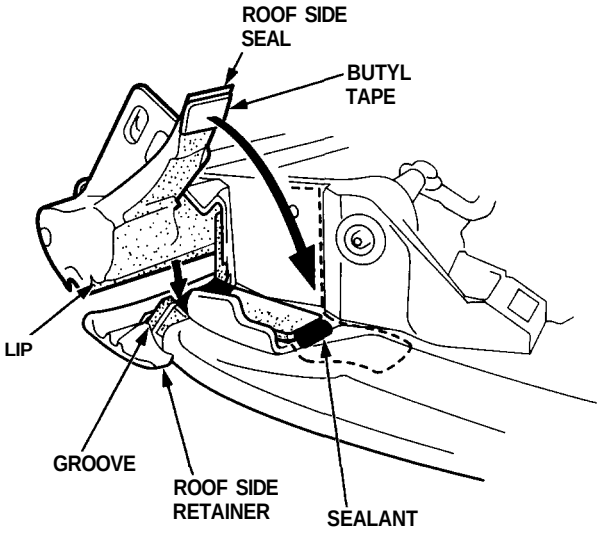

Rear:

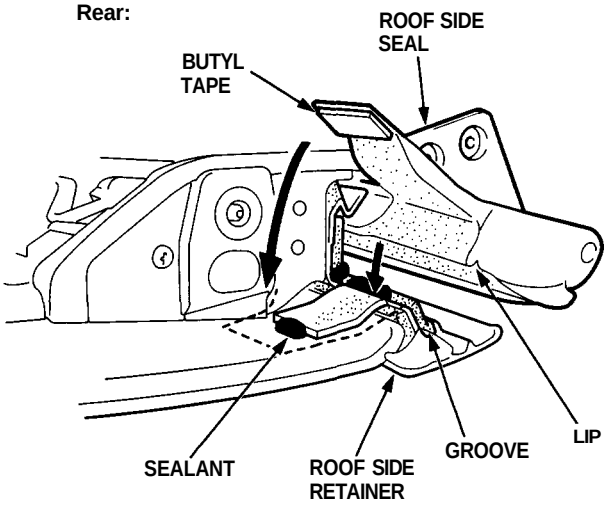

(cont'd)

Roof Side Seal/Retainer Replacement (cont'd)

15. Install the screws on each end of the roof side seal.

    NOTE: Do not press on the seal yet to make the adhesive stick.

►: Screw locations

A ►, 2	B ►, 2
	
4 x 0.7 mm 1.47 N·m (0.15 kgf·m, 1.08 lbf·ft)	4 x 0.7 mm 1.47 N·m (0.15 kgf·m, 1.08 lbf·ft)

Front:

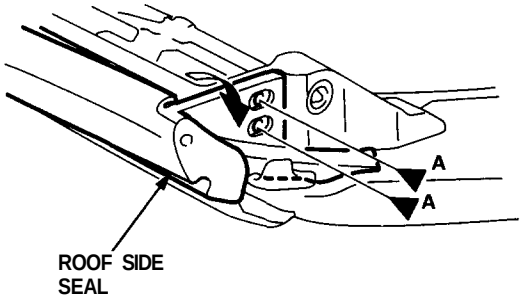

Rear:

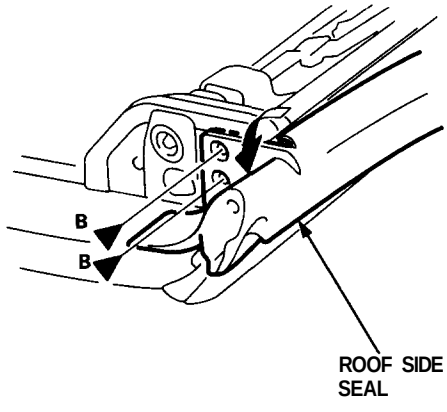

16. Install the side portion of the roof side seal into the roof side retainer as shown.

    NOTE:
    - Do not press on the seal yet to make the adhesive stick.
    - After setting the lip at location Ⓐ, install the roof side seal while pushing the lip in the roof side retainer with a rounded plastic spatula at location Ⓑ.

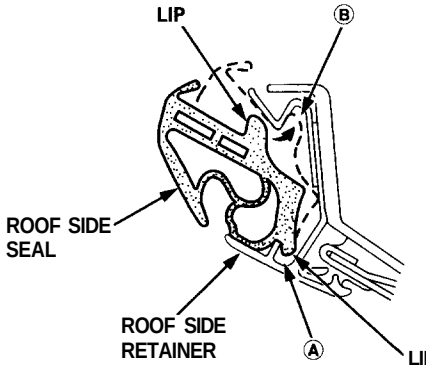

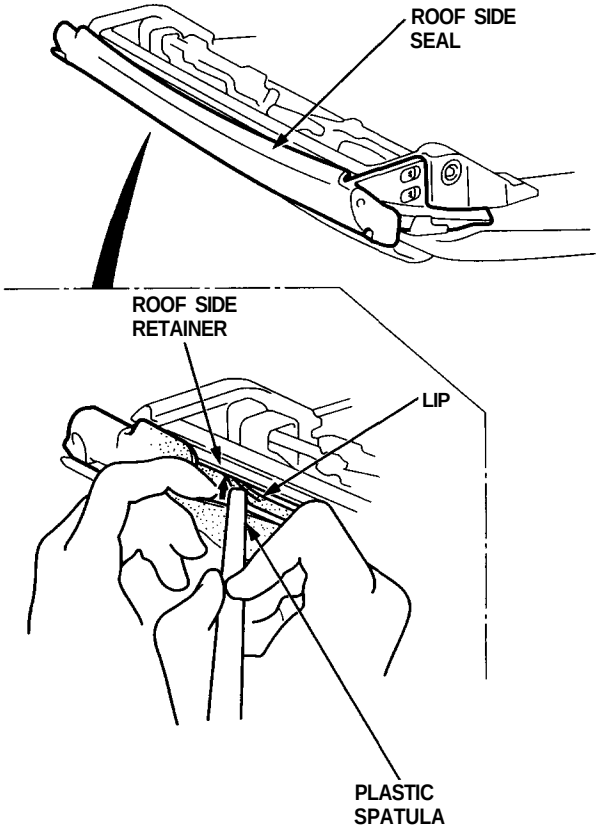

17. Scrape or wipe the excess sealant off with a putty knife or towel.

    NOTE: To remove sealant from a painted surface or the roof side seal, wipe with a soft shop towel dampened with alcohol.

18. Let the roof stand for at least three hours after installing the roof side seal.

19. Before installing the roof trim, install the roof on the body, then check that the seal fits flush (see page 20-107).
    If necessary, align the roof side seal by adjusting the roof side lock unit (see page 20-106).
    When you are satisfied that the seal fits properly, press on the seal to make the adhesive stick.

20. Check that the door glass contacts the seal evenly (see page 20-109).

21. Check for water leaks (see page 20-110).

22. Remove the roof, then install the roof trim (see page 20-82).

Roof Side Lock Unit Replacement

CAUTION: To prevent damage, place the roof on an appropriate pad.

1. Remove the roof.

2. Remove:
   - Roof front trim (see page 20-82)
   - Roof side trim (see page 20-82)
   - Roof side seal (see page 20-84)
   - Roof side retainer (see page 20-84)

3. Install the roof side lock handle.

4. Turn the roof side lock handle to the locked position.

5. Remove the nuts and rear roof holder, then remove the roof side lock unit. Remove the roof side lock handle.

   NOTE: Take care not to bend the lock pins.

●: Nut locations, 6

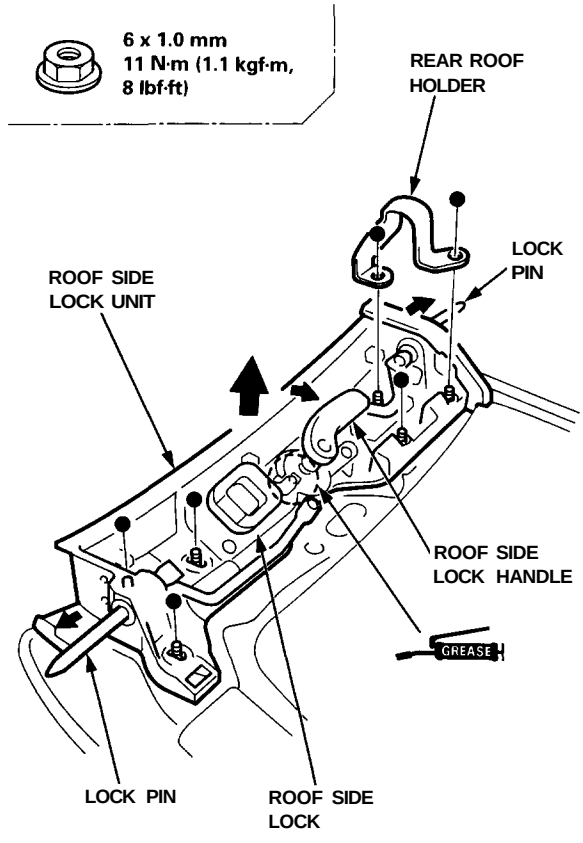

(cont'd)

Roof Side Lock Unit Replacement (cont'd)

6. If necessary, remove the roof side hook.

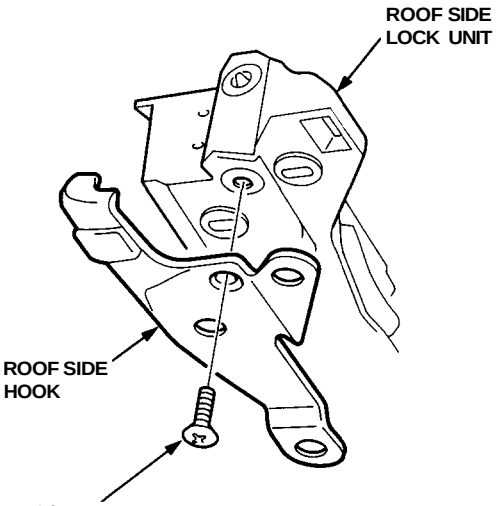

7. Installation is the reverse of the removal procedure.

NOTE:

- Grease the location indicated by the arrow and the lock pins.
- Make sure the roof side lock works smoothly.
- Install the roof side retainer and roof side seal properly as described on page 20-85.
- Before installing the roof trim, install the roof on the body, then check that the seals fit flush (see page 20-107).
  If necessary, align the roof side seals by adjusting the roof side lock unit (see page 20-106).
- Check that the door glass contacts the seals evenly (see page 20-109).
- Check for water leaks (see page 20-110).

Roof Lock Guides Replacement

CAUTION: To prevent damage, place the roof on an appropriate pad.

1. Remove the roof.

2. Remove:
   - Roof front trim (see page 20-82)
   - Roof side trim (see page 20-82)
   - Roof side lock (see page 20-83)

3. Remove the roof lock guides.

NOTE: Replace the roof lock guides with new ones.

Front:

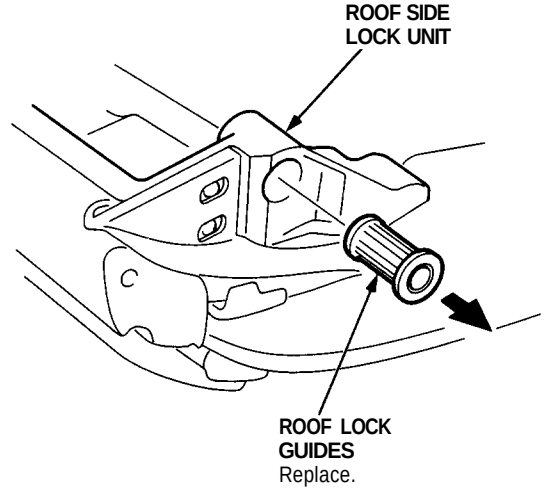

Rear:

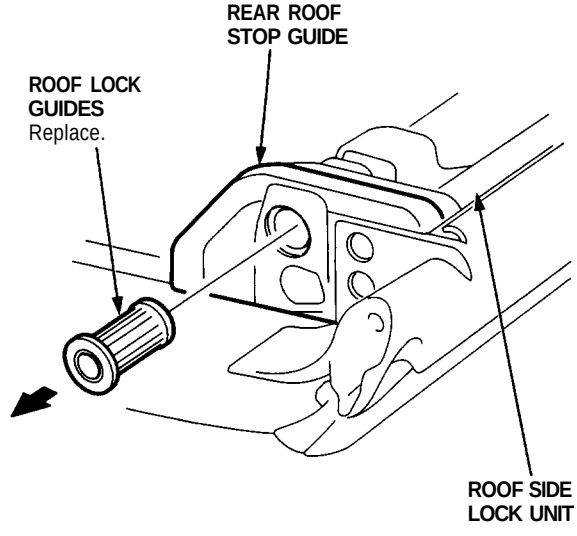

4. Clean the roof lock guide installing portion of the roof side lock unit and rear roof stop guide with a sponge dampened in alcohol.

   NOTE: After cleaning, keep oil, grease and water from getting on the surface.

5. Clean the new roof lock guides with alcohol.

6. Apply a light coat of silicone primer around the roof lock guide bonding surface.
   Let the primer dry for at least 30 minutes.

7. Apply the silicone sealant to the roof lock guides.

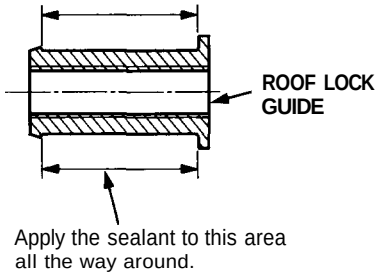

8. Install the roof lock guides.

9. Scrape or wipe the excess sealant off with a soft shop towel dampened with alcohol.

10. Install the roof side lock (see page 20-83).

    NOTE: Make sure the roof side lock works smoothly.

11. Install the roof trim (see page 20-82).

Rear Roof Stop Guide Replacement

CAUTION: To prevent damage, place the roof on an appropriate pad.

1. Remove the roof.

2. Remove:
   - Roof front trim (see page 20-82)
   - Roof side trim (see page 20-82)
   - Roof side lock (see page 20-83)
   - Rear roof lock guide (see page 20-90)

3. Remove the rear end of the roof side seal (see page 20-84).

   NOTE: Take care not to damage the roof side seal. If it is damaged, replace it with new one.

4. Remove the screw, then remove the rear roof stop guide.

5. Installation is the reverse of the removal procedure.

   NOTE:
   - Install the roof side seal properly as described on page 20-85.
   - Before installing the roof trim, install the roof on the body, then check that the seals fit flush (see page 20-107).

►: Screw location, 1

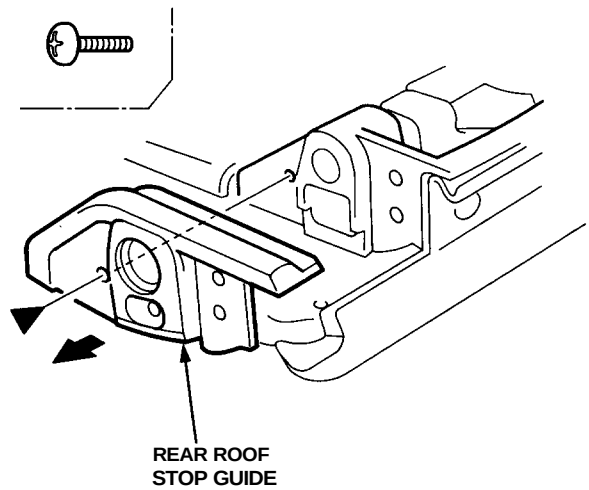

Lock Receivers Replacement

1. Remove the roof.
2. Remove the front and rear roof rail trim (see page 20-79).
3. Disconnect the connector, and detach the harness clip (rear lock receiver). Remove the bolts, then remove the front and rear lock receivers.
4. Installation is the reverse of the removal procedure.

NOTE:
- Make sure the connector is connected properly.
- Adjust the lock receivers alignment.

►: Bolt locations, 8

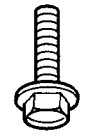

8 x 1.25 mm
22 N·m (2.2 kgf·m, 16 lbf·ft)

Front:

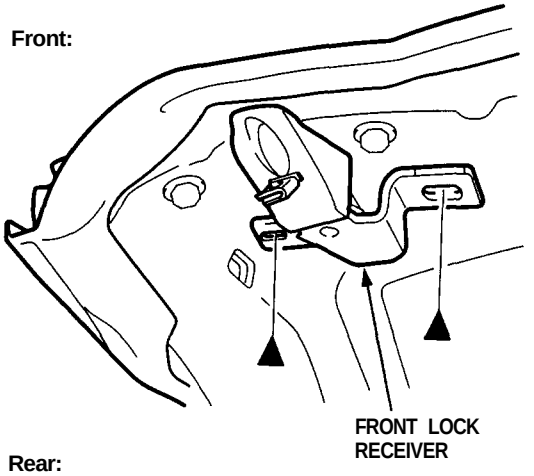

Rear:

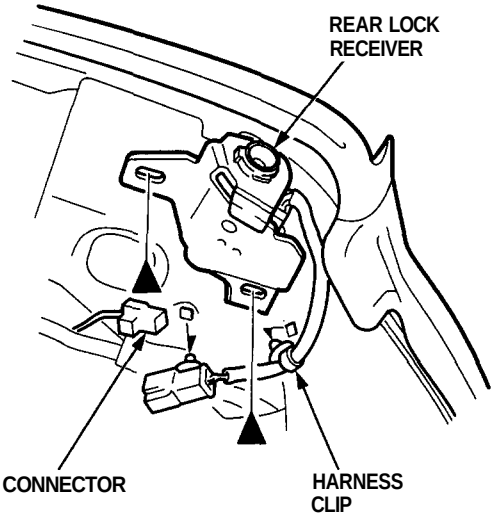

Roof

Lock Receivers Adjustment

NOTE: This adjustment should be done in the following order after removing or replacing the lock receiver.

1. Loosen the lock receiver mounting bolts at each of the four corners, then tighten them lightly.

Front:

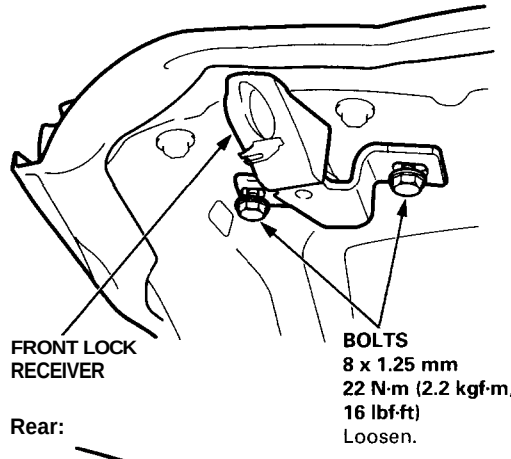

Rear:

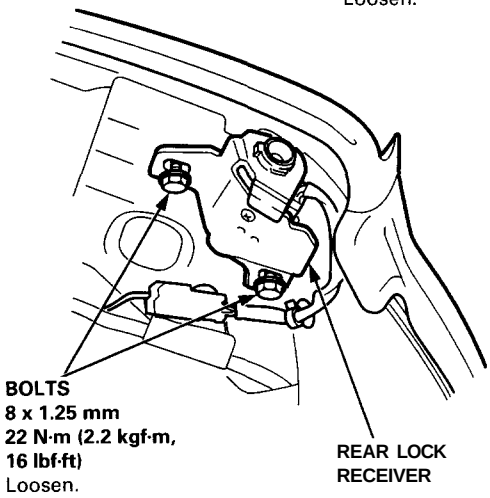

2. Install the roof on the body.

CAUTION: When installing the roof, make sure both roof side locks are unlocked.

NOTE:
- Make sure each roof side hook aligns with the hook stop properly.
- Before securing the roof by turning each roof side lock handle, check that the roof side retainer aligns against the front pillar retainer and rear pillar panel evenly at each side, and check that the seals fit flush.

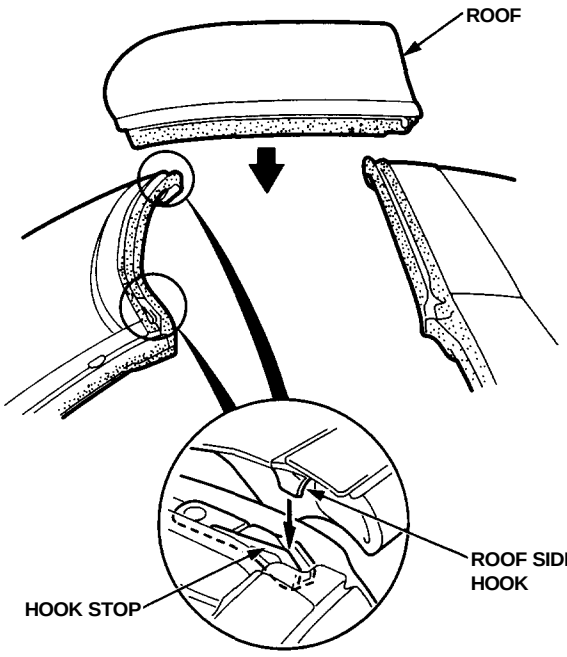

Front:

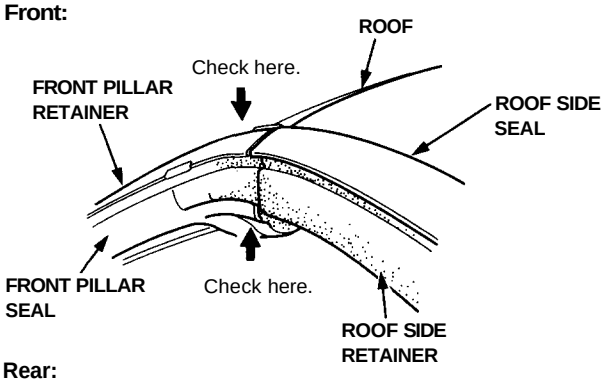

Rear:

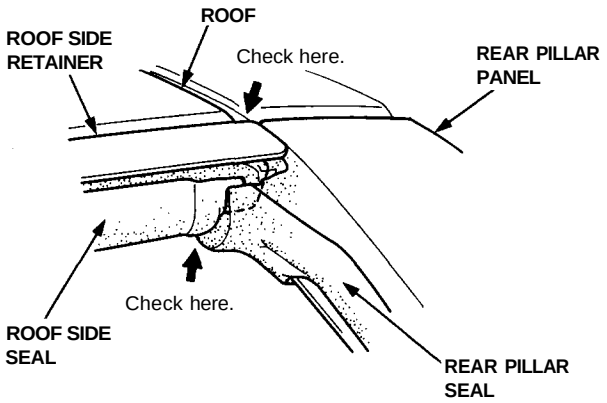

NOTE: The seals should fit flush.

3. Secure the roof by turning both roof side lock handles. Make sure they are locked securely.

   NOTE: Turn each roof side lock handle until a faint click is heard.

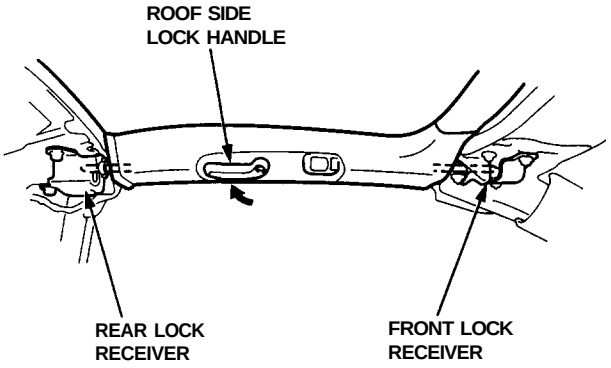

4. Tighten the lock receiver mounting bolts at each of the four corners.

5. Check that the seals fit flush.

6. Check the height of the roof with the body. If necessary, loosen the lock receiver mounting bolts, then adjust the height of the roof to make the roof fit flush with the body by using shims.

➡ : Shim locations

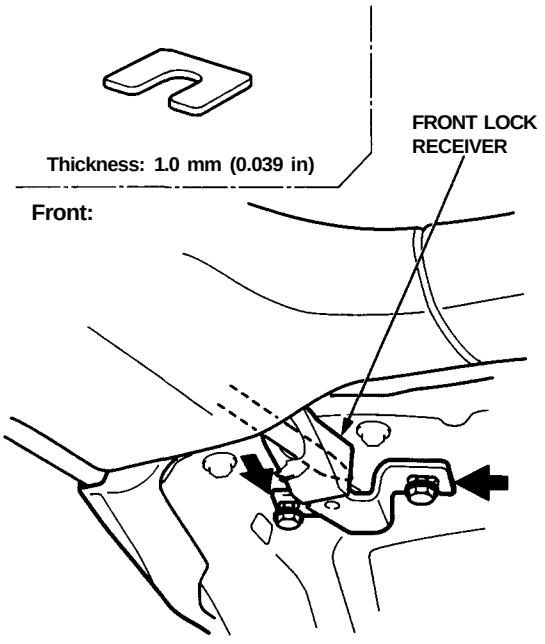

(cont'd)

Lock Receivers Adjustment (cont'd)

Rear:

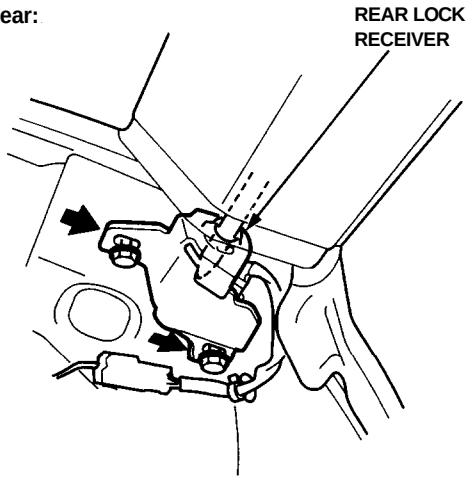

7. Tighten the lock receiver mounting bolts.
8. Check that each roof side lock handle works smoothly.
9. Remove the roof.
10. Reinstall all remaining removed parts.

Front Pillar Seal/Retainer

Replacement

NOTE:
- When the front pillar seal has been removed, and or it is damaged, replace it with new one.
- Have an assistant help replace the front pillar seal.

1. Remove the roof.
2. Remove the front roof rail trim (see page 20-79).
3. Remove the hook stop from each side.

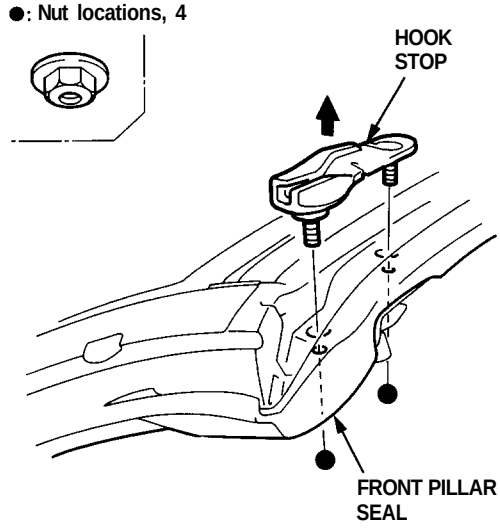

4. Detach the clips from the bottom of both front pillars.

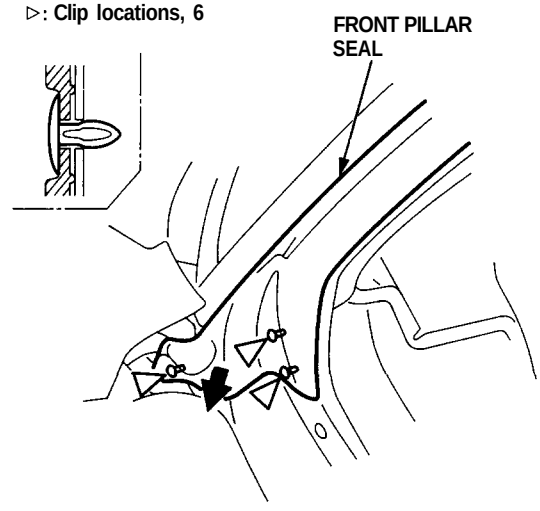

5. Remove the front pillar seal.

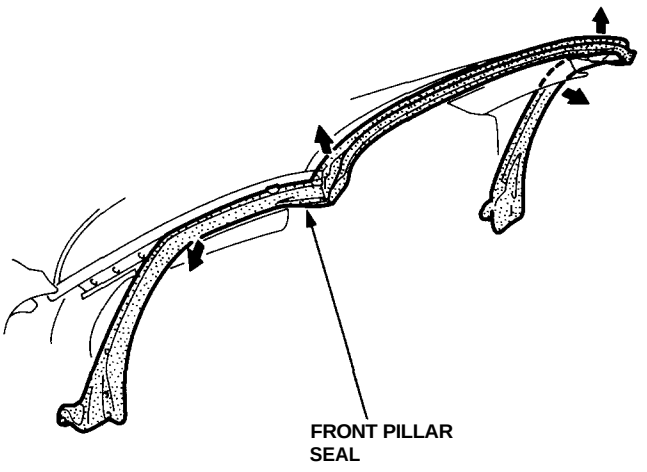

6. Remove the screws, then remove the front pillar retainer.

NOTE: If necessary, remove the glass guide clip from the front pillar retainer.

►: Screw locations, 7

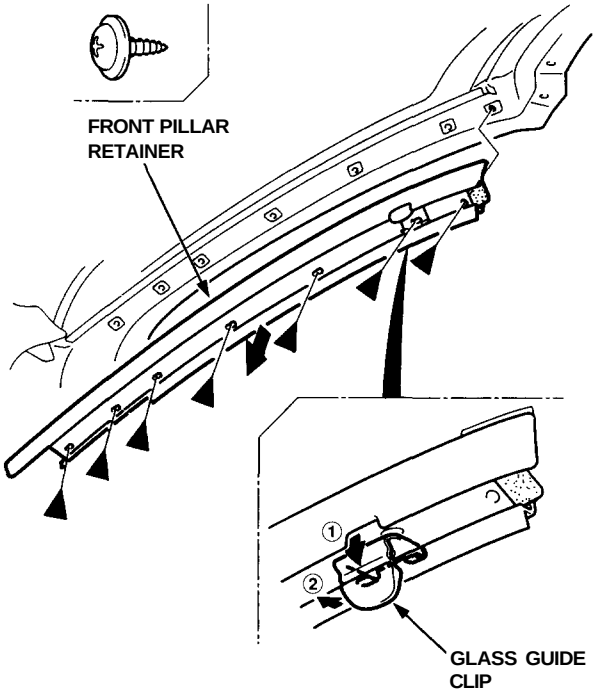

7. Scrape the old sealant from the body bonding surface with a putty knife.

NOTE: Do not scrape down to the painted surfaces of the body.

8. Clean the body bonding surface with a sponge dampened in alcohol.

NOTE: After cleaning, keep oil, grease and water from getting on the surface.

9. If the old front pillar retainer is to be reinstalled, use a putty knife to scrape off all of the old sealant and the EPT sealer as shown, then clean the front pillar retainer surface with alcohol where new sealant and EPT sealer are to be applied.

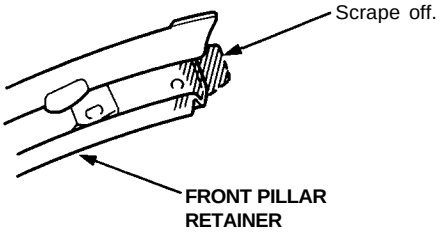

10. Glue the new EPT sealer to top edge of the front pillar retainer as shown.

EPT sealer thickness: 5 mm (0.2 in)

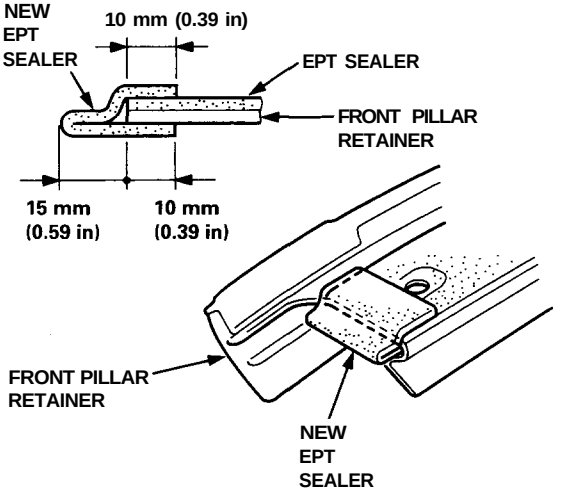

(cont'd)

Front Pillar Seal/Retainer

Replacement (cont'd)

11. Install the front pillar retainer.

    NOTE:
    - Be careful not to touch the front pillar retainer where sealant will be applied.
    - First tighten the screw at top of the front pillar retainer.

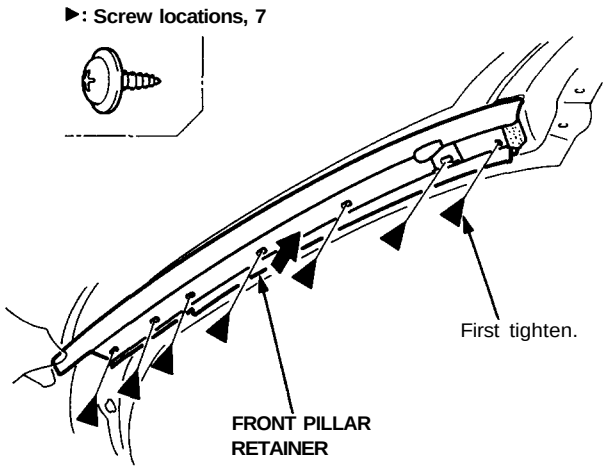

12. Apply new sealant to the body and retainers on each side as shown.

    :Sealant locations
    (Cemedine P/N 08712 - 0004, or equivalent)

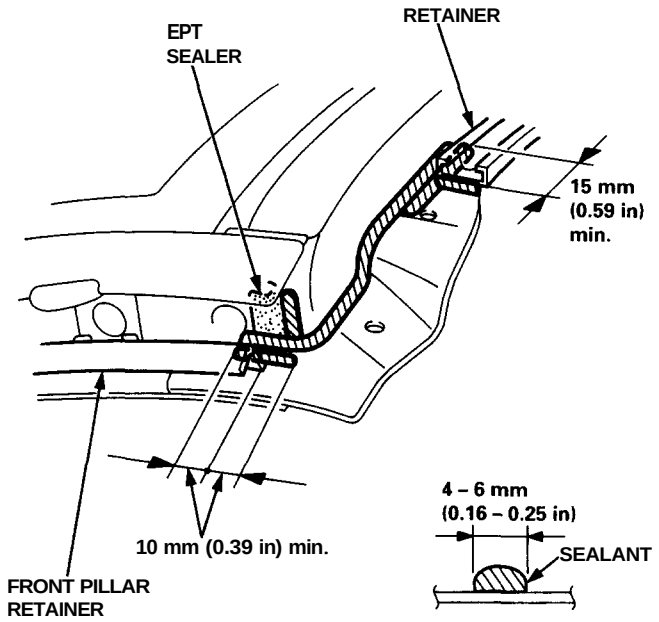

13. Peel the separator off from the butyl tapes on the new front pillar seal.

    NOTE: Fold the separator of the butyl tape at the roof portion of the front pillar seal.

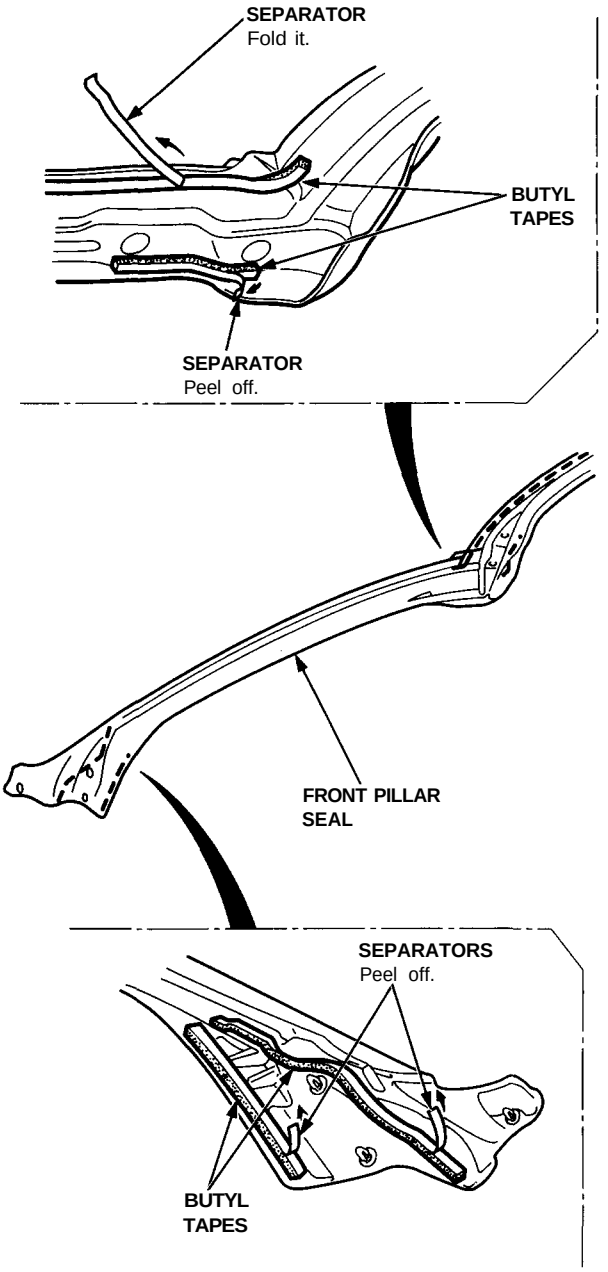

14. Align the holes on the front pillar seal with the holes on the body, and engage the lips of the front pillar seal with the groove of the retainers, then gently set each corner of the front pillar seal down on the sealant as shown.

NOTE: Do not press on the seal yet to make the adhesive stick.

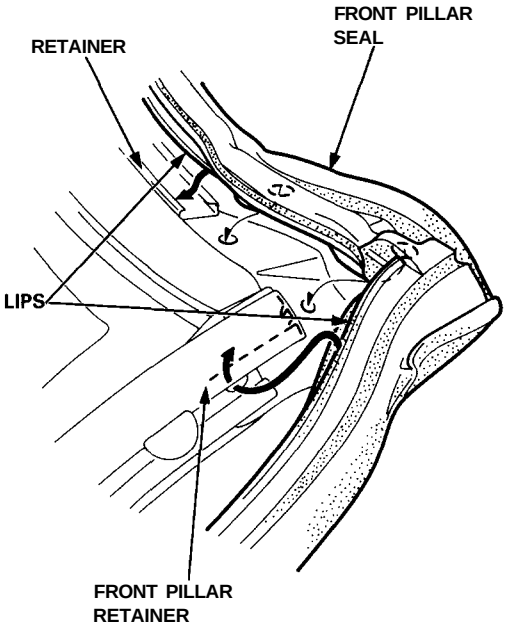

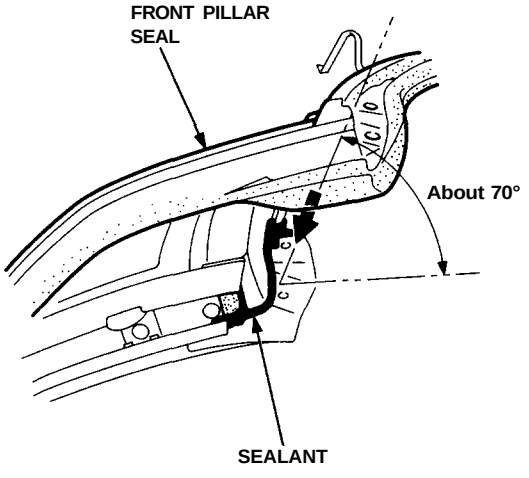

NOTE: Install the pillar and roof portions of the front pillar seal into the retainers about 50 mm (2 in).

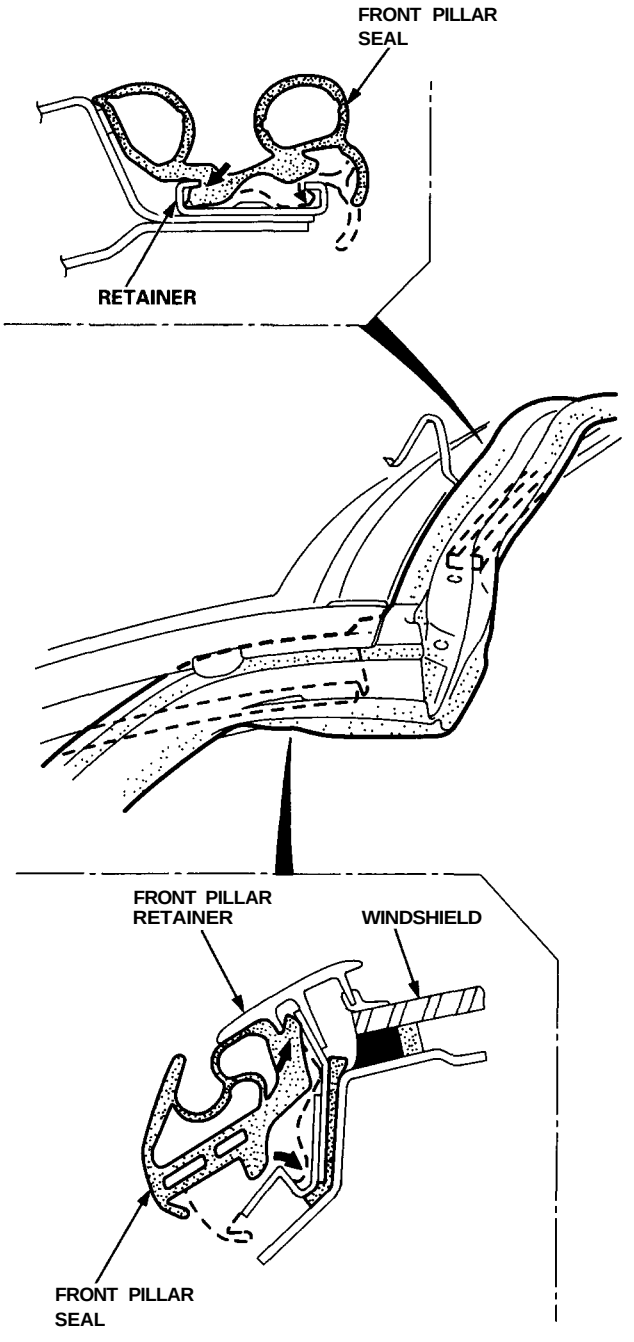

(cont'd)

Front Pillar Seal/Retainer

Replacement (cont'd)

15. Install the hook stop on each side.

NOTE: Do not press on the seal yet to make the adhesive stick.

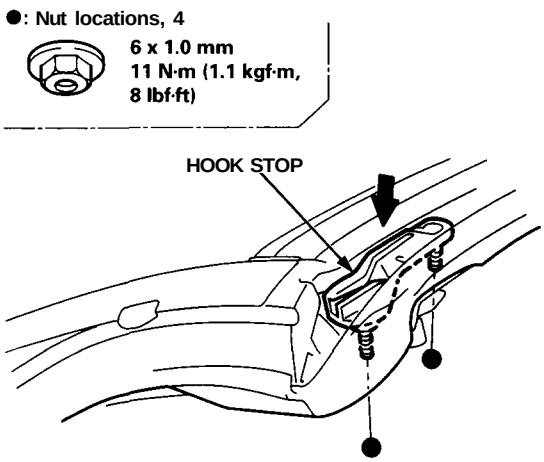

16. Install each pillar portion of the front pillar seal into the front pillar retainer as shown, then attach the clips.

NOTE:
- Do not press on the seal yet to make the adhesive stick.
- After setting the lip at location Ⓐ, install the front pillar seal while pushing the lip in the front pillar retainer with a rounded plastic spatula at location Ⓑ.

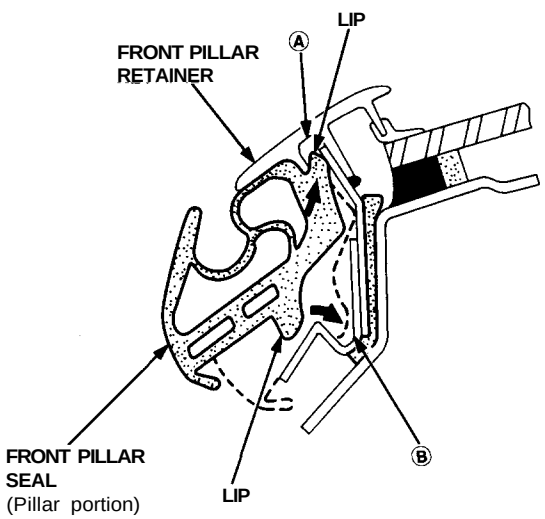

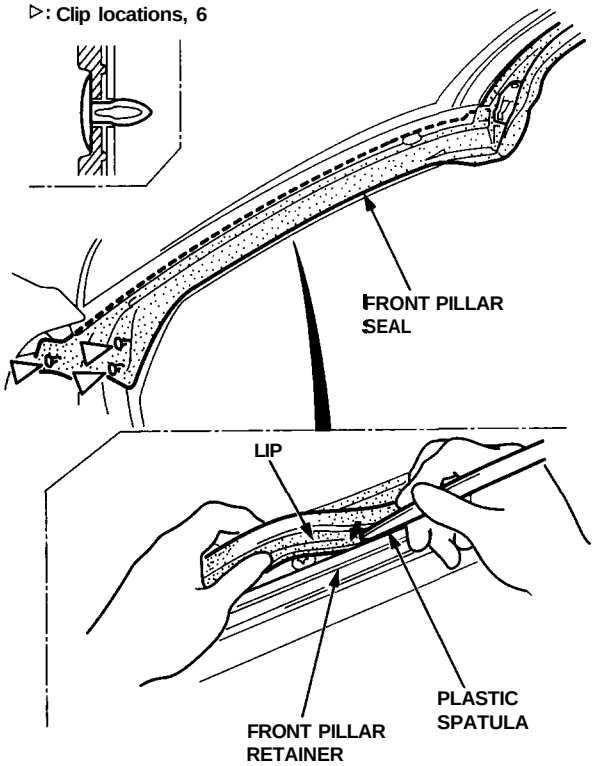

17. Install the roof portion of the front pillar seal into the retainer on the roof rail.

NOTE:
- Do not press on the seal yet to make the adhesive stick.
- Install the roof portion in the same way as the pillar portion.
- Before installing the roof portion of the front pillar seal, lubricate the lips with soapy water.

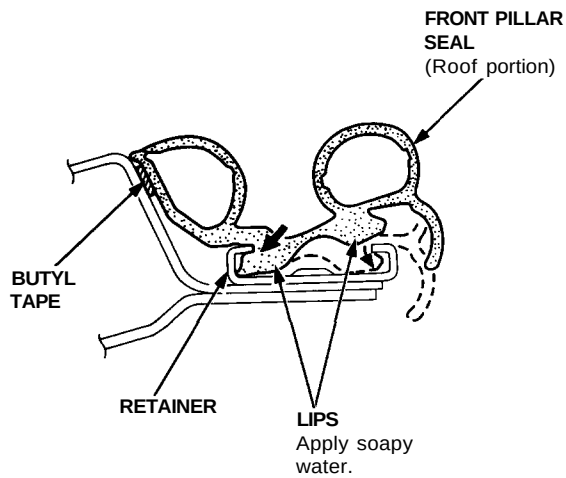

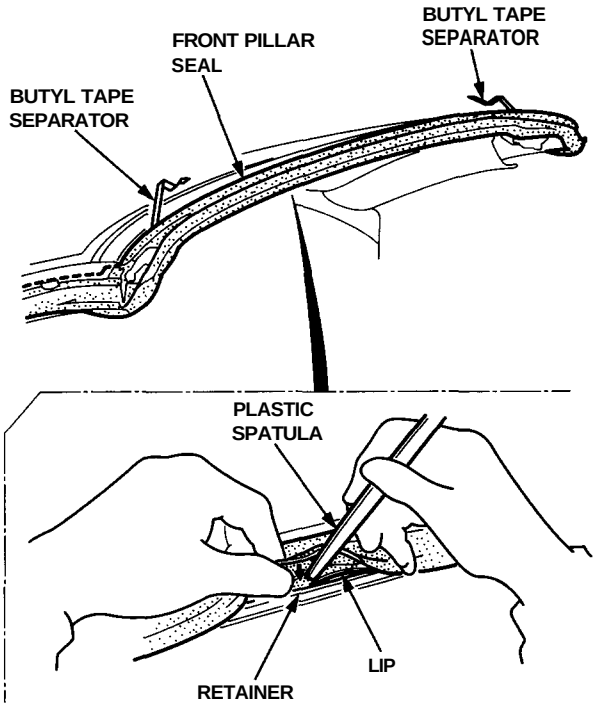

18. Carefully pull the separator away from the butyl tape at the roof portion of the front pillar seal.

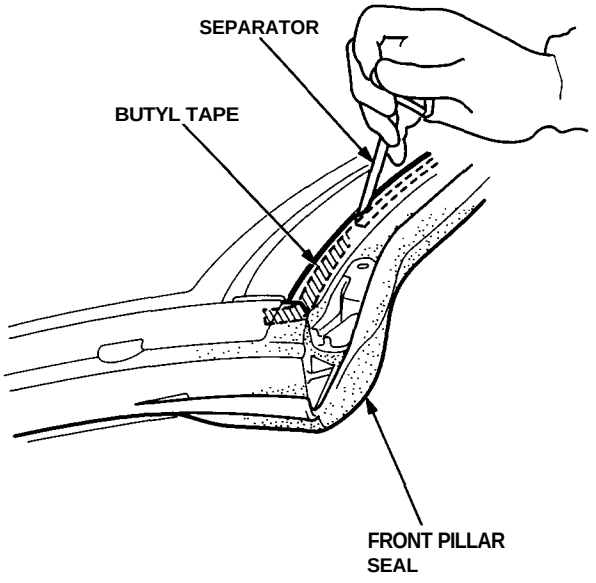

19. Press on the roof portion of the butyl tape to make the adhesive stick.

NOTE: Do not press on the front pillar seal portion of the seal yet.

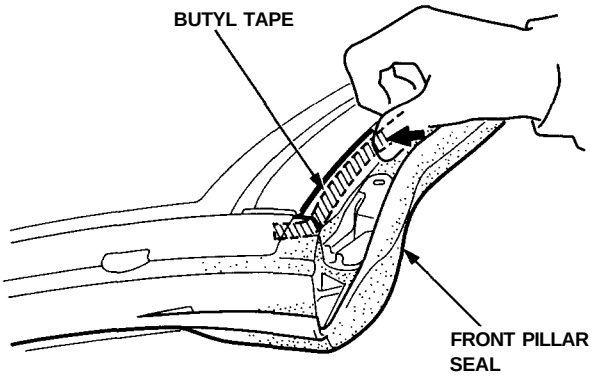

20. Scrap or wipe the excess sealant off with a putty knife or towel.

NOTE: To remove sealant from a painted surface or the front pillar seal, wipe with a soft shop towel dampened with alcohol.

21. Close the doors, then check that there is about 20 mm (0.79 in) between the top edge of the front sash and the seam on the front pillar seal on each side.
Adjust the seal as needed, then press on the front pillar portion of the butyl tape to make the adhesive stick.

NOTE: Do not raise the door glass.

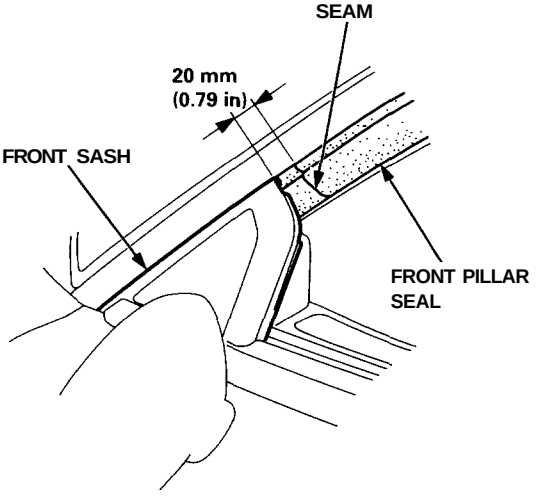

(cont'd)

Front Pillar Seal/Retainer

Replacement (cont'd)

22. Let the sealant dry for at least three hours after installing the front pillar seal.

23. Install the roof on the body, then check that the seals fit flush (see page 20-107).

    NOTE: If necessary, align the roof side seal by adjusting the roof side lock unit (see page 20-106).

24. Check that each door glass contact the seals evenly (see page 20-109).

25. Check for water leaks (see page 20-110).

26. Remove the roof, then reinstall all remaining removed parts.

Rear Pillar Seal/Retainer

Replacement

NOTE:
- When the rear pillar seal has been removed, and/or it is damaged, replace it with new one.
- Have an assistant help replace the rear pillar seal.

1. Remove the roof.
2. Remove the rear roof rail trim (see page 20-80).
3. Detach the clips from the bottom of both rear pillar.

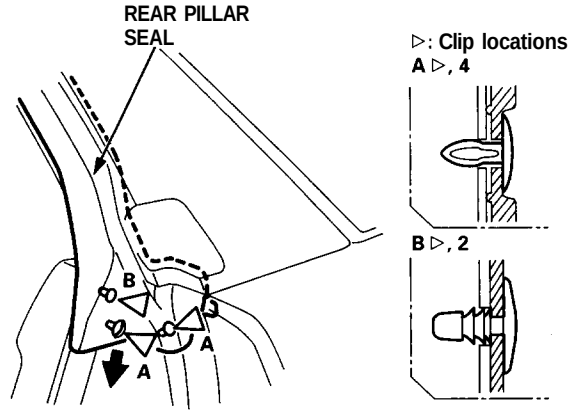

4. Remove the screws, and detach the clips from each side, then remove the rear pillar seal.

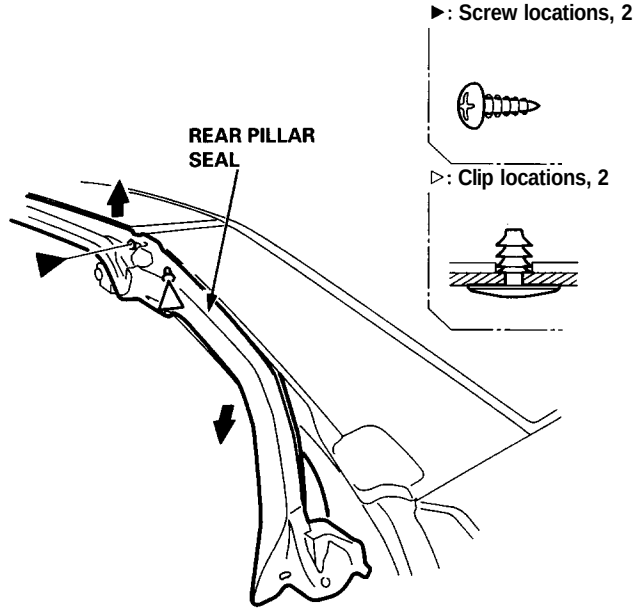

5. Remove the screws, then remove the rear pillar retainer.

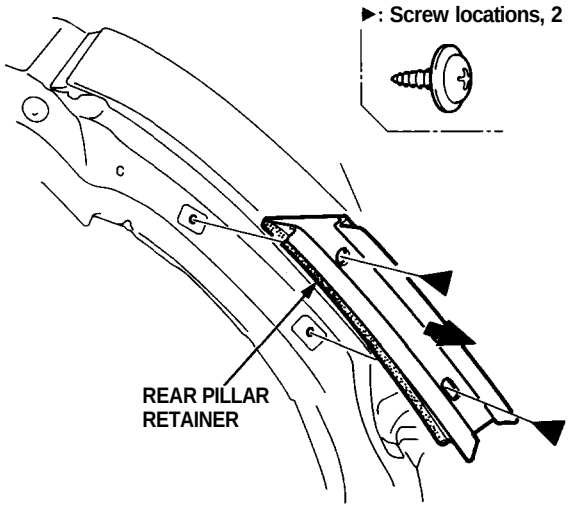

6. Scrape the old sealant from the body bonding surface with a putty knife.

   NOTE: Do not scrape down to the painted surfaces of the body.

7. Clean the body bonding surface with a sponge dampened in alcohol.

   NOTE: After cleaning, keep oil, grease and water from getting on the surface.

8. If the old rear pillar retainer is to be reinstalled, use a putty knife to scrape off all of the old sealant, then clean the rear pillar retainer surface with alcohol where new sealant is to be applied.

9. Install the rear pillar retainer.

   NOTE:
   - Be careful not to touch the rear pillar retainer where sealant will be applied.
   - First tighten the screw at top of the rear pillar retainer.

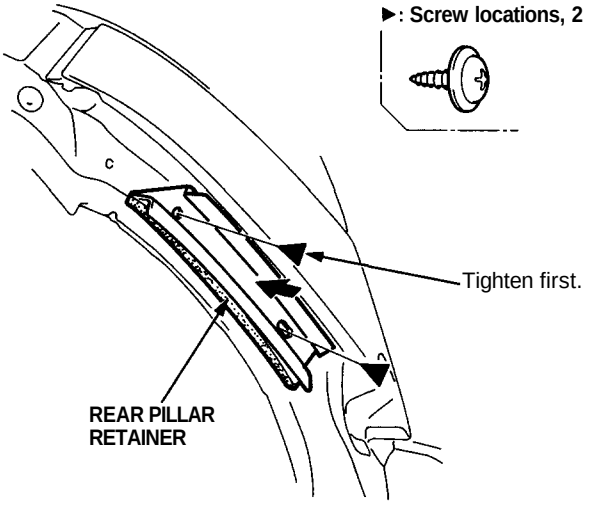

10. Apply new sealant to the body and rear pillar retainer on each side as shown.

: Sealant locations
(Cemedine P/N 08712 - 0004, or equivalent)

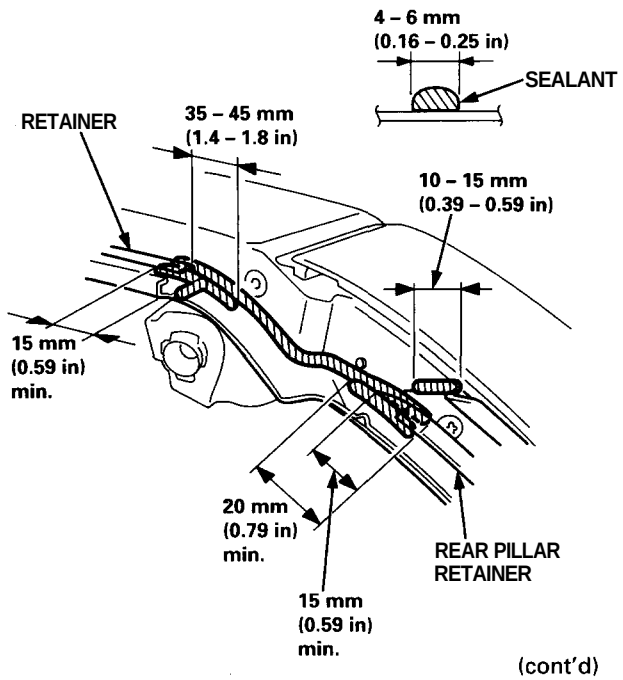

(cont'd)

Rear Pillar Seal/Retainer

Replacement (cont'd)

11. Peel the separator off from the butyl tape on the new rear pillar seal.

    NOTE: Fold the separator of butyl tape at the roof portion of the rear pillar seal.

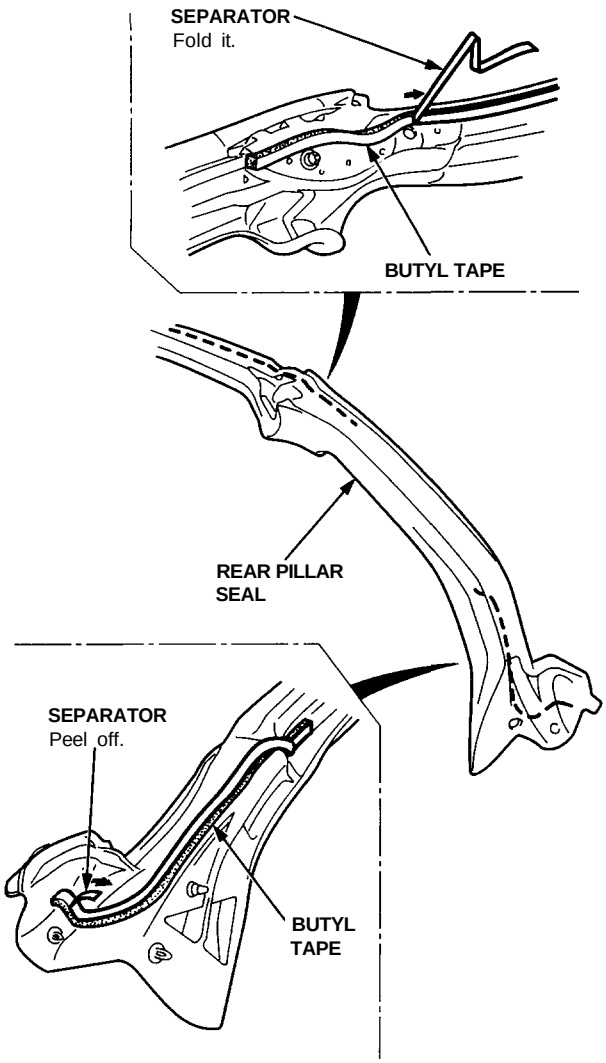

12. Align the hole and clip on the rear pillar seal with the grommet and hole on the body, and engage the lips of the rear pillar seal with the groove of the retainers, then gently set each corner of the rear pillar seal down on the sealant as shown.

    NOTE: Do not press on the seal yet to make the adhesive stick.

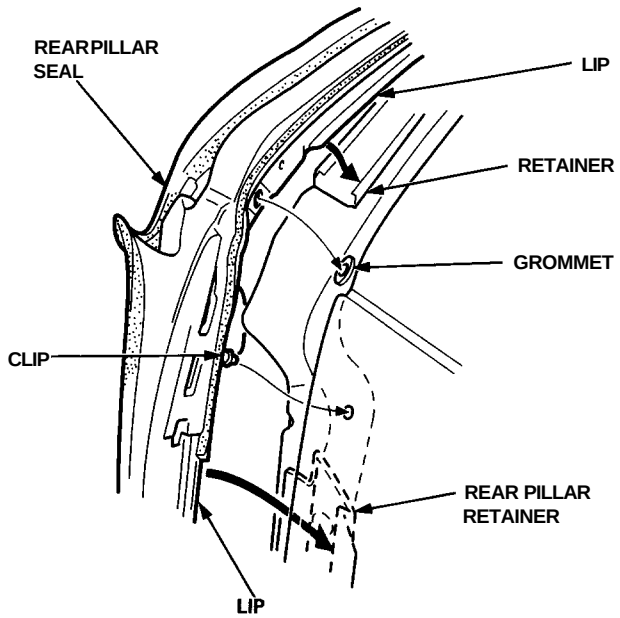

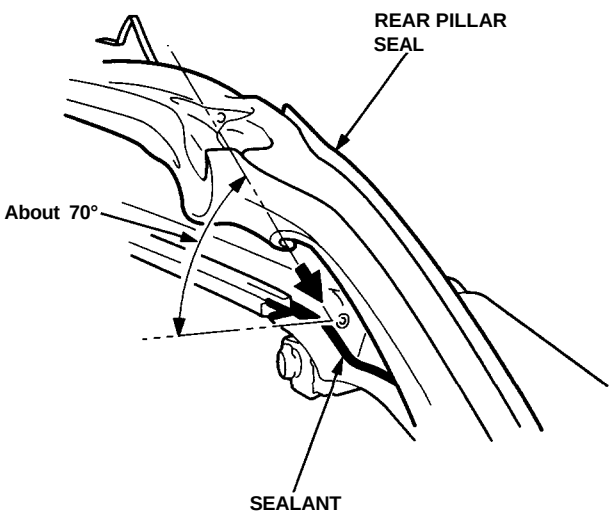

NOTE: Install the screw, attach the clip on each side, and install the pillar and roof portions of the rear pillar seal into the retainers about 50 mm (2 in).

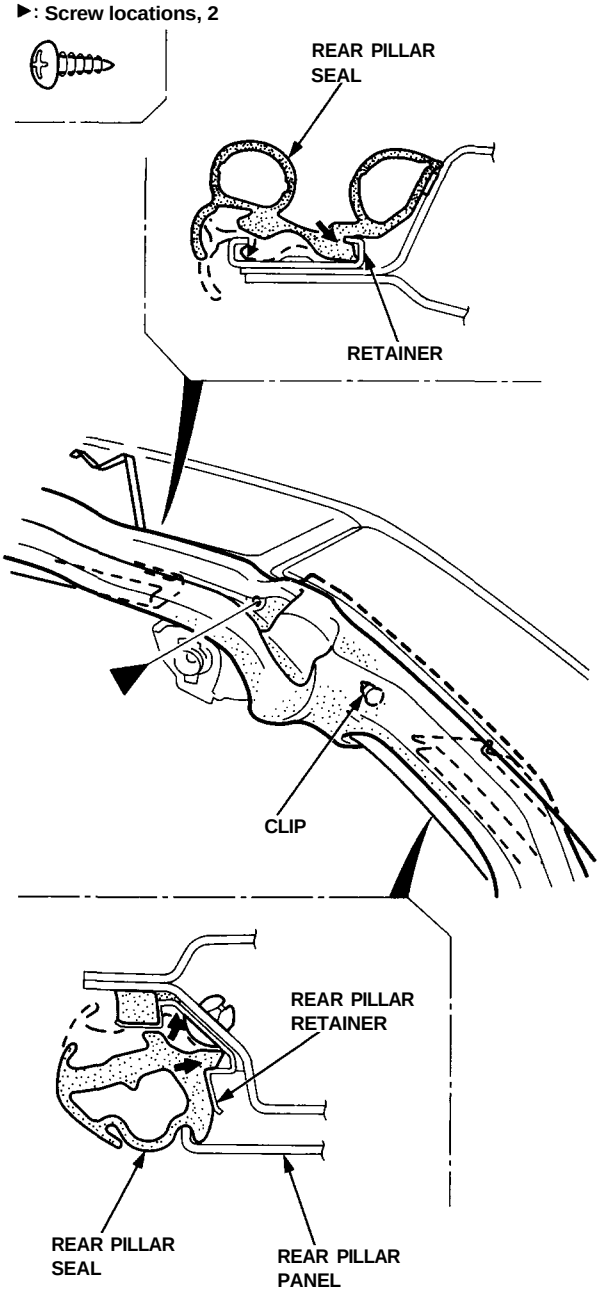

13. Install each pillar portion of the rear pillar seal into the rear pillar retainer as shown, then attach the clips.

NOTE:

- Do not press on the seal yet to make the adhesive stick.
- After setting the lip at location Ⓐ, install the rear pillar seal while pushing the lip in the rear pillar retainer with a rounded plastic spatula at location Ⓑ.

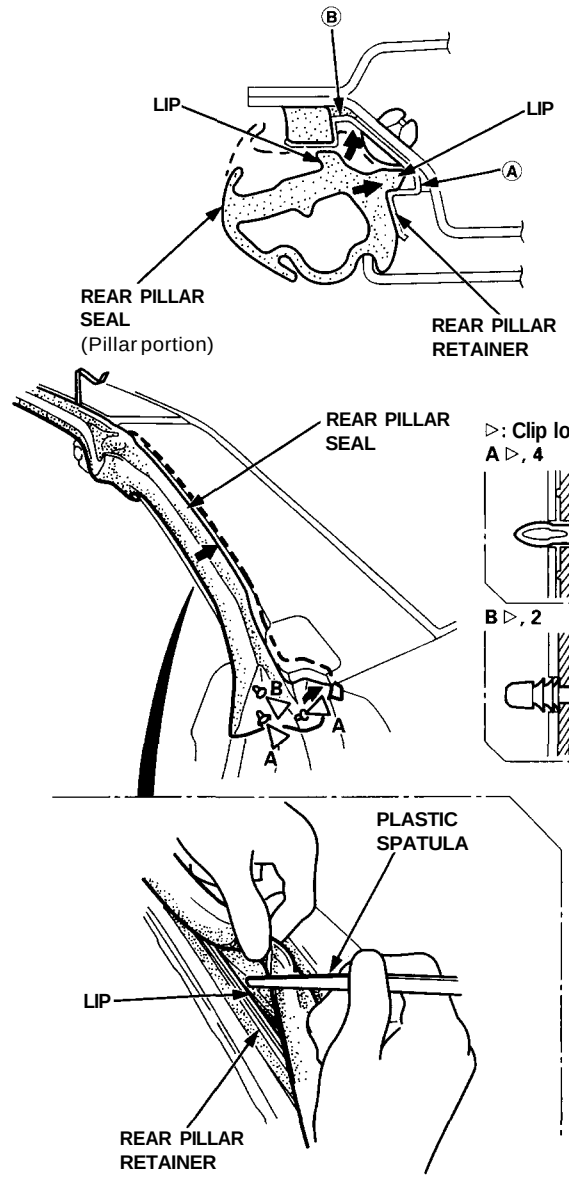

(cont'd)

Rear Pillar Seal/Retainer

Replacement (cont'd)

14. Install the roof portion of the rear pillar seal to the retainer on the roof rail.

    NOTE:
    - Do not press on the seal yet to make the adhesive stick.
    - Install the roof portion in the same way as the pillar portion.
    - Before installing the roof portion of the rear pillar seal, lubricate the lips with soapy water.

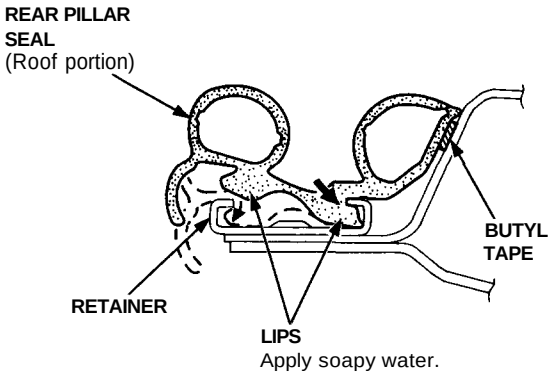

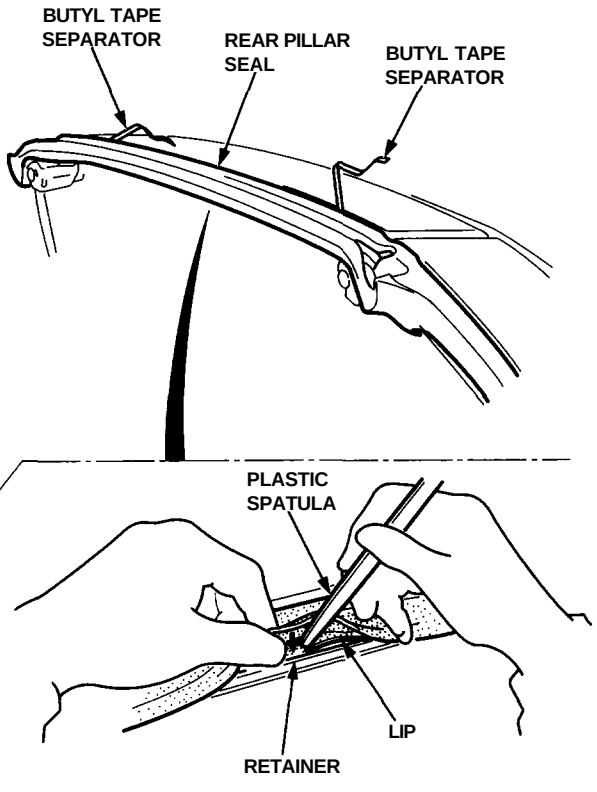

15. Carefully pull the separator away from the butyl tape at the roof portion of the rear pillar seal.

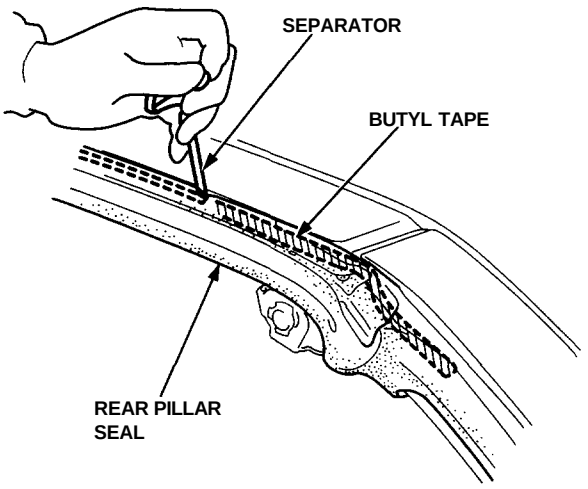

16. Press on the roof portion of the butyl tape to make the adhesive stick.

    NOTE: Do not press on the rear pillar portion of the seal yet.

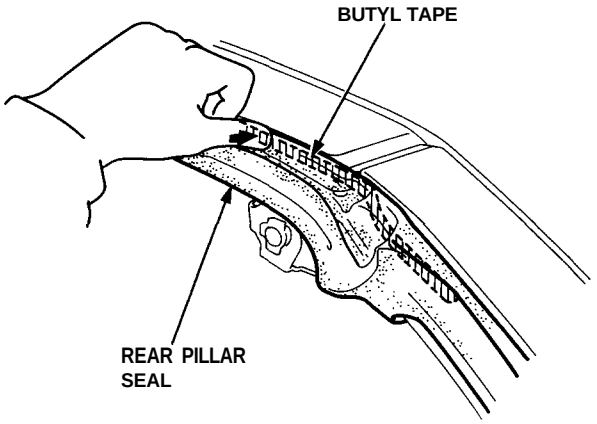

17. Scrap or wipe the excess sealant off with a putty knife or towel.

    NOTE: To remove sealant from a painted surface or the rear pillar seal, wipe with a soft shop towel dampened with alcohol.

18. Let the sealant dry for at least three hours after rear pillar seal installation.

19. Install the roof on the body, then check that the seals fit flush (see page 20-107).
    If necessary, align the roof side seal by adjusting the roof side lock unit (see page 20-106).
    When you are satisfied that the seal fits properly, press on the rear pillar portion to make the adhesive stick.

20. Check that each door glass contacts the seals evenly (see page 20-109).

21. Check for water leaks (see page 20-110).

22. Remove the roof, then reinstall all remaining removed parts.

Seals/Retainers Alignment

Adjustment

NOTE: When the following parts have been replaced or removed, this adjustment should be done.

- Roof side seals
- Roof side lock units
- Front and rear pillar seals

CAUTION: To prevent damage, place the roof on an appropriate pad.

1. Remove the roof front trim and roof side trim (see page 20-82).

2. Install the roof side lock handle.

3. Turn the roof side lock handle to the locked position.

4. Loosen the roof side lock unit mounting nuts, then tighten them lightly.

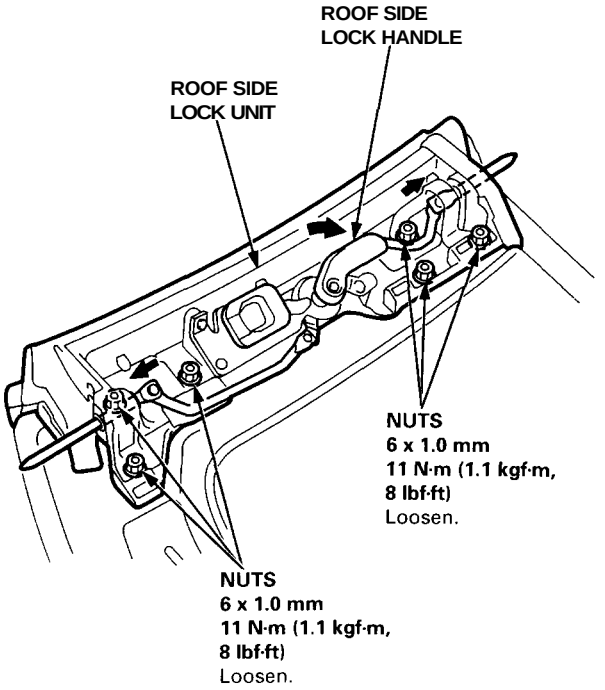

5. Return the roof side lock handle to the unlocked position.

6. Remove the front and rear roof rail trim (see page 20-79).

7. Loosen the lock receiver mounting bolts at each of the four corners, then tighten them lightly.

Front:

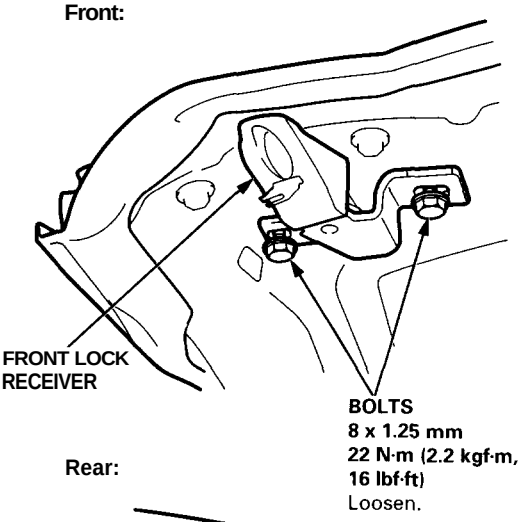

Rear:

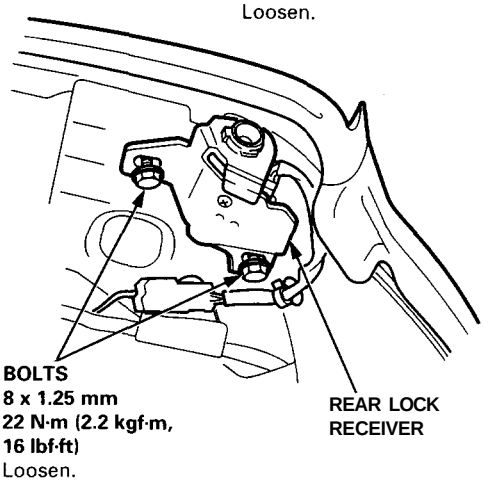

8. Install the roof on the body.

CAUTION: When installing the roof, make sure both roof side locks are unlocked.

NOTE: Make sure each roof side hook aligns with the hook stop properly.

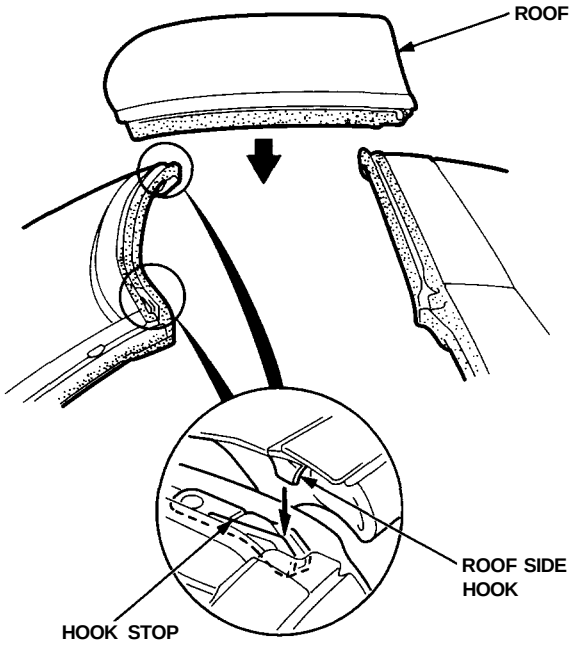

9. Secure the roof by turning both roof side lock handles. Make sure they are locked securely.

NOTE: Turn each roof side lock handle until a faint click is heard.

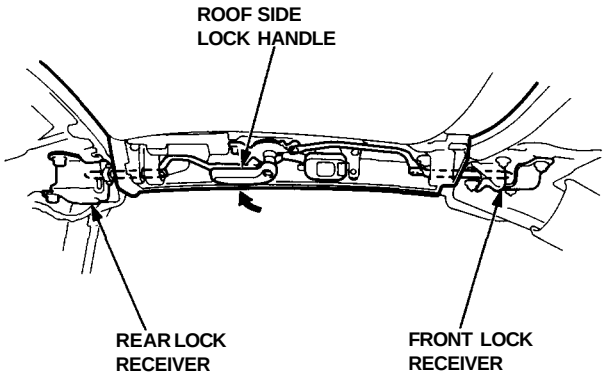

10. Check the seal and retainer alignment.
    - Each seal joint fits flush.
    - Each retainer aligns.

11. Adjust the seal and retainer alignment by moving both roof side lock units in or out.

NOTE: Align the roof side retainer with the front pillar retainer and rear pillar panel evenly on each side, and make the seals fit flush.

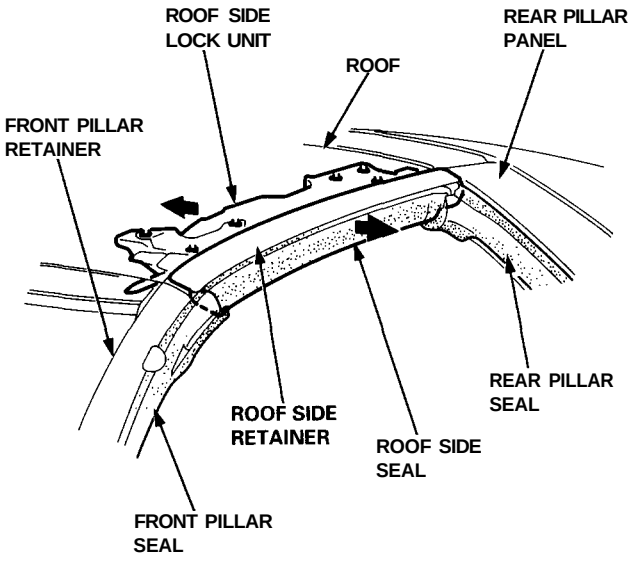

Front:

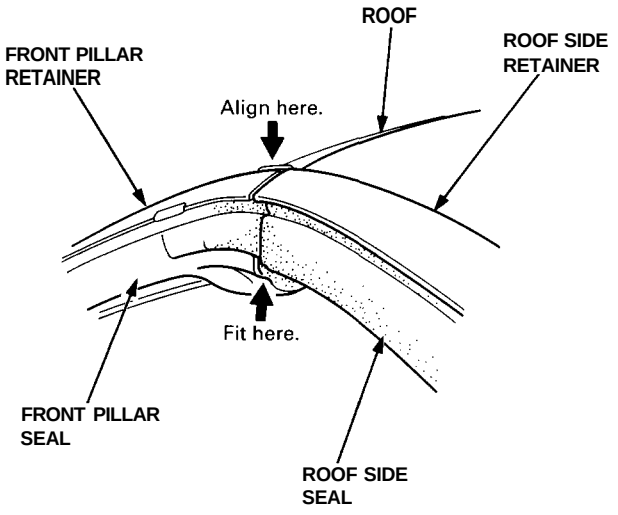

(cont'd)

Adjustment (cont'd)

Rear:

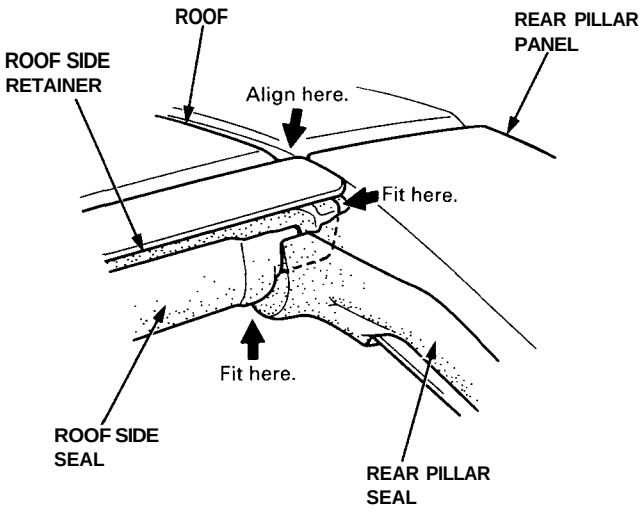

12. Tighten the roof side lock unit mounting nuts and lock receiver mounting bolts.

13. If you need to adjust the rear end of the roof side seal to fit against the rear pillar seal, remove the roof, then adjust the rear end of the roof side seal with a shim.

NOTE:
- Remove the rear end of the roof side seal, then install the shim.
- Install the roof side seal securely as described on page 20-85.

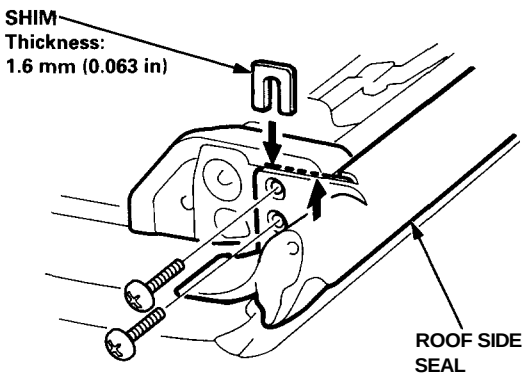

14. Check the height of the roof with the body.
If necessary, loosen the lock receiver mounting bolts, then adjust the height of the roof to make the roof fit flush with the body by using shims.

: **Shim locations**

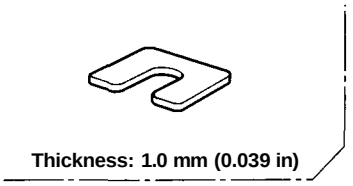

Front:

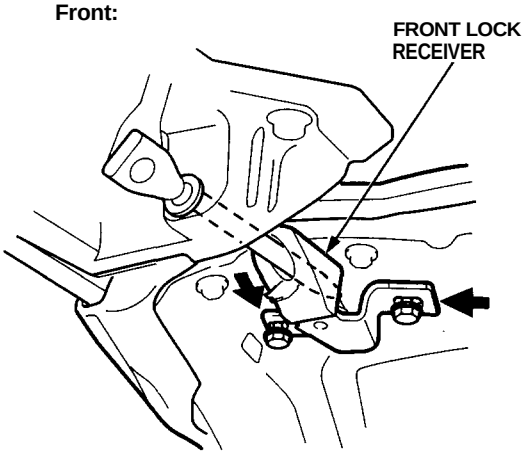

Rear:

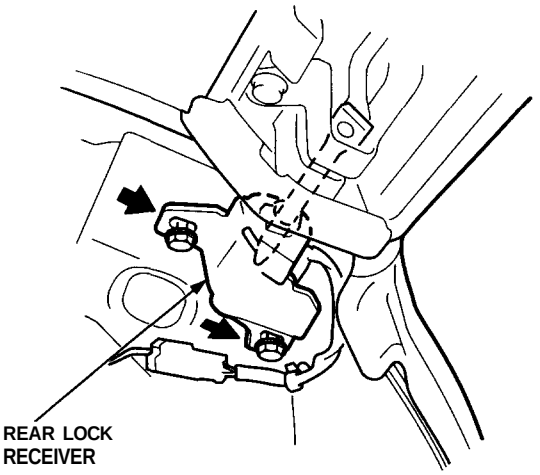

15. Tighten the lock receiver mounting bolts.

16. Check that each roof side lock handle works smoothly.

17. Remove the roof.

18. If the roof side retainer has not been replaced, and or the EPT sealer on the roof side retainer has not been replaced, do the following (see page 20-84):

    a. Remove the roof side seal and roof side retainer from the roof,
    b. Replace the EPT sealer on the roof side retainer and roof.
    c. Replace the butyl tapes on the roof side seal,
    d. Reinstall the roof side retainer, then apply new sealant,
    e. Reinstall the roof side seal.

19. Check the lips of the roof side seal, and glue the peeled lip securely with sealant, then wipe the excess sealant off with a soft shop towel dampened with alcohol.

20. After applying the sealant, let the roof stand for at least three hours.

21. Install the roof on the body, then make sure the seals fit flush.

    NOTE: Make sure both roof side lock handles are locked securely.

22. Check that the door glass contacts the seal evenly as follows:

    a. Raise the door glass fully, and close the door.
    b. Mark a line on the door glass using a thin plastic plate as shown,
    c. Open the door, then check that there is 1 - 3 mm (0.039 - 0.12 in) between the door glass edge and the a line around the front pillar and roof,
    d. If necessary, adjust the door glass (see page 20-14).

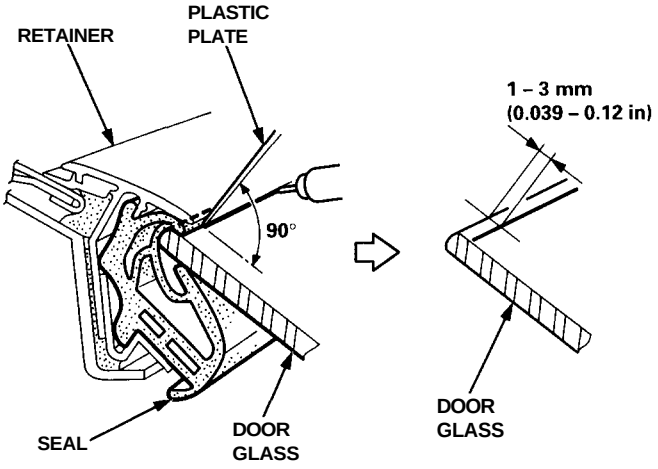

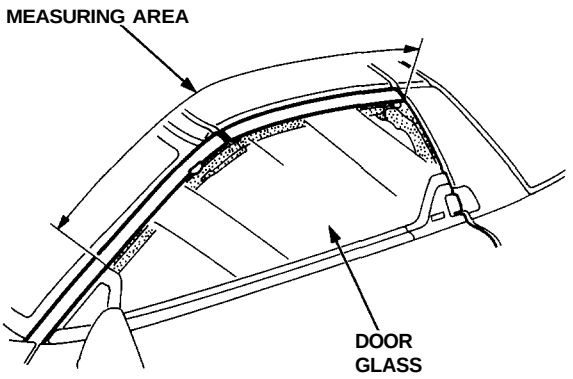

23. Check for water leaks (see page 20-110).

24. Remove the roof, then reinstall all remaining removed parts.

Water Leak Test

NOTE: When the following parts have been replaced or removed, and or the roof side lock unit, door glass and door have been adjusted, this water leak test should be done.

- Roof side seals
- Roof side lock units
- Front and rear pillar seals
- Door and door glass

1. Make sure that the roof is locked securely.

2. Raise the glass fully, and close the doors.

3. Spray water over the roof and on the sealing area as shown.

   NOTE:
   - Adjust the water pressure as shown.
   - Do not squeeze the tip of the hose.

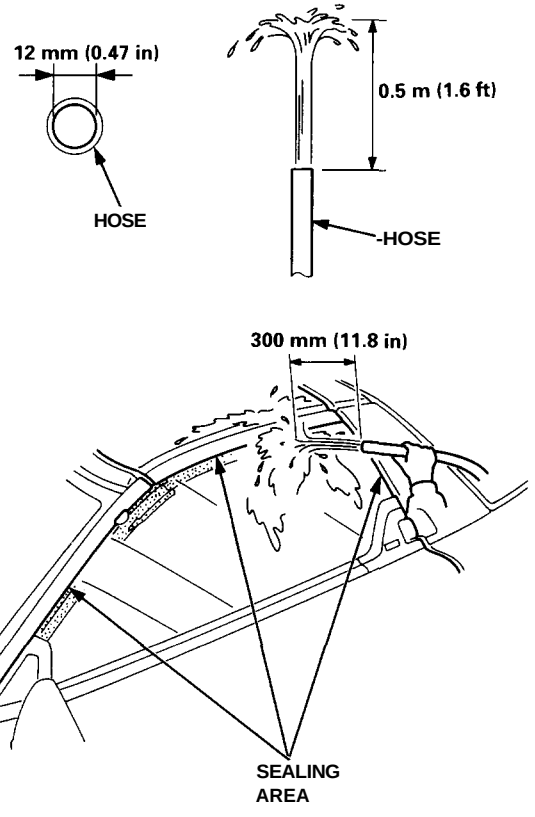

4. Check for water leaks.

5. If there are leaks, recheck the work performed, and recheck the door glass, seal, and retainer adjustments.

Engine Cover/Roof Cover

Removal

NOTE:
- Take care not to scratch the body.
- Open the rear hatch.

1. Open the engine cover, and support it with the support rod. Disconnect the roof holder switch connector, remove the nut, then remove the ground wire.

   NOTE: If necessary, remove the roof switch sub-harness.

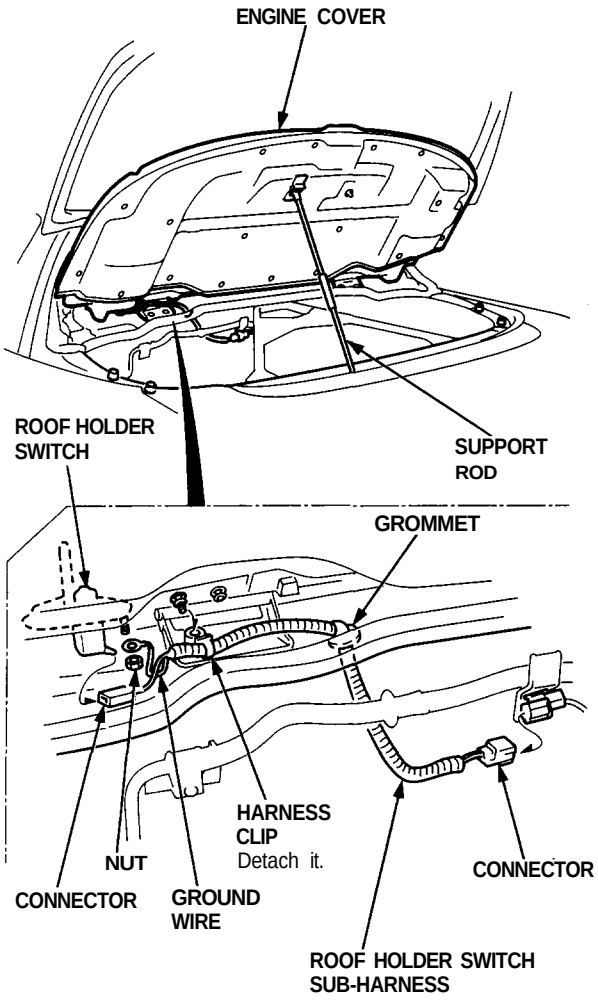

2. Remove the support rod from the engine cover. Remove the bolts, than remove the engine cover.

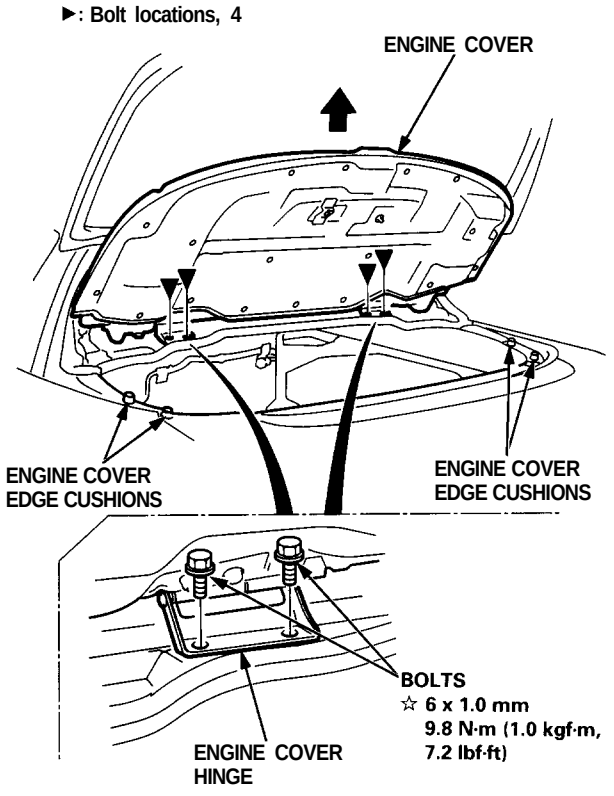

3. Installation is the reverse of the removal procedure.

   NOTE:
   - Make sure the roof holder switch connector is connected properly.
   - If necessary, turn the engine cover edge cushions to make the engine cover fit flush with the body.

Engine Cover/Roof Cover

Replacement

NOTE:
- Take care not to scratch the body.
- Open the rear hatch.

Roof cover (Engine cover) removal:

1. Open the roof cover, remove the nuts, then remove the roof cover.

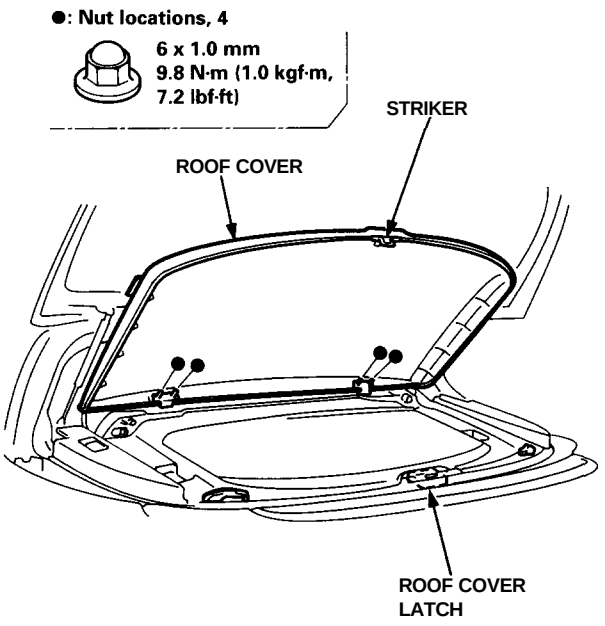

NOTE: After installing the roof cover, adjust the roof cover latch by using shims to make the roof cover lock securely (see page 20-113).

2. If removing the engine cover, remove the ground wire, disconnect the roof holder switch connector, then detach the harness clip from the left side (see page 20-111). Remove the nuts, then remove the engine cover.

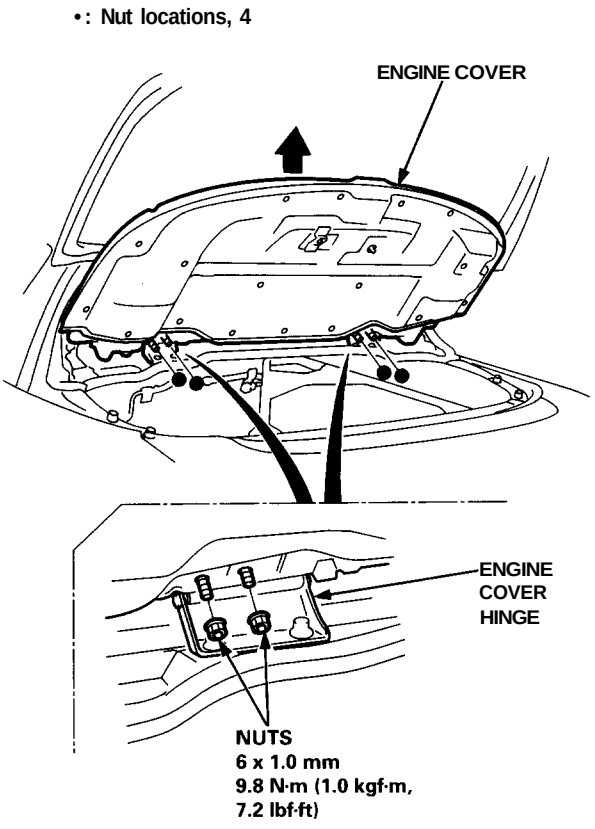

3. Installation is the reverse of the removal procedure.

NOTE: Make sure the roof cover opens properly and locks securely.

Opener/Latch/Opener cable/Hook stop/Roof stop bracket removal:

1. Open the engine cover. Remove the screws, then remove the support rod bracket. Remove the push nuts, then remove the engine cover insulator.

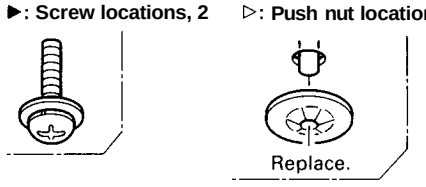

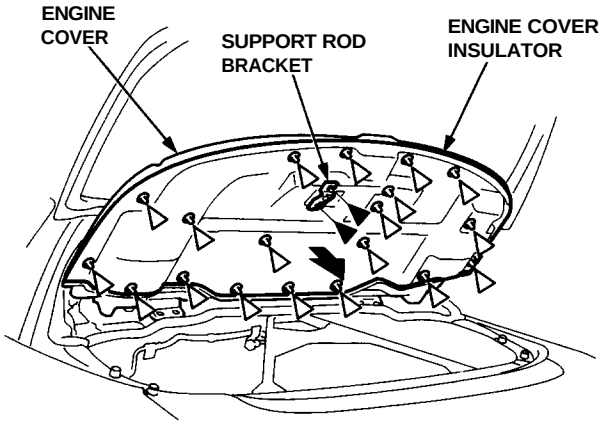

2. Remove the roof cover latch, roof cover opener and roof cover opener cable from the engine cover.

NOTE: Take care not to bend the roof cover opener cable.

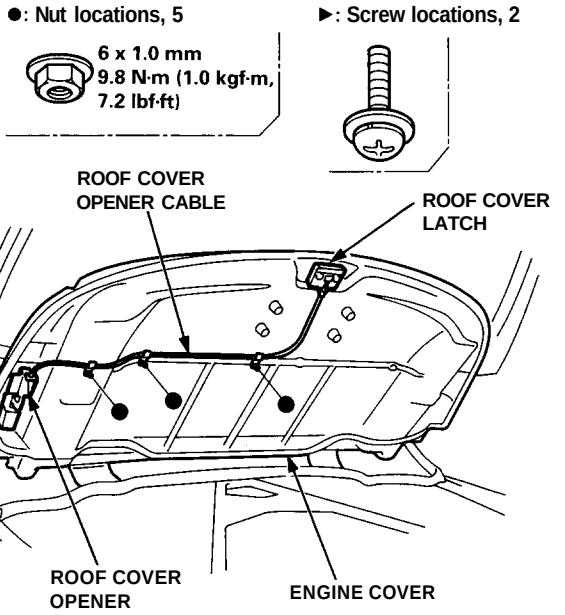

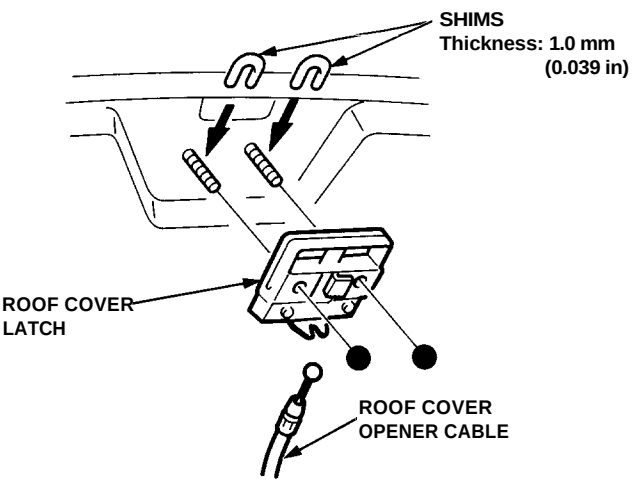

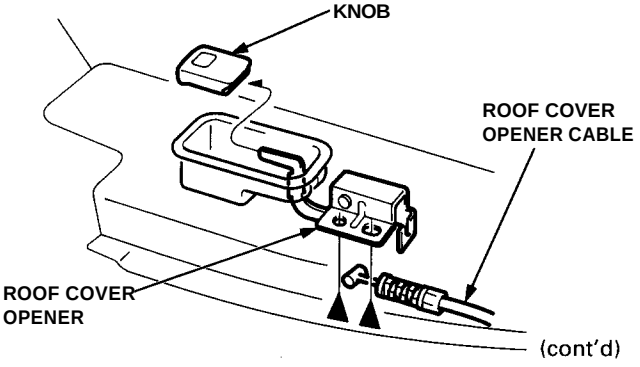

(cont'd)

Engine Cover/Roof Cover

Replacement (cont'd)

3. Remove the roof stop brackets and hook stops from the engine cover.

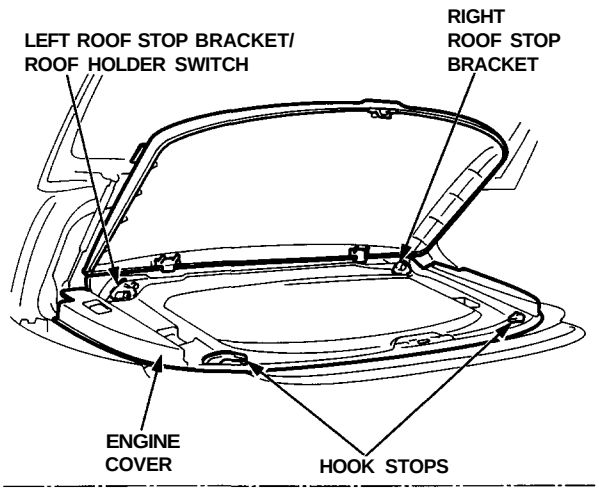

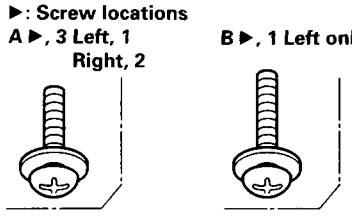

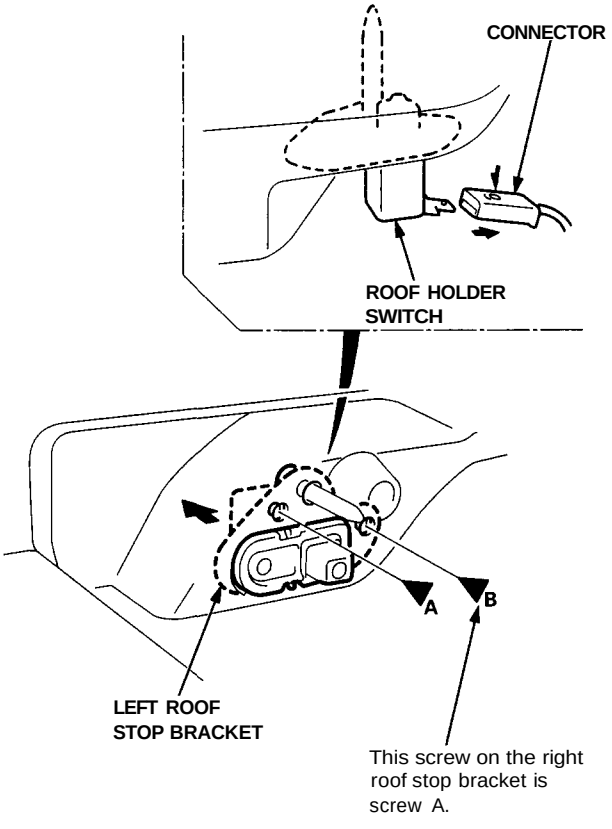

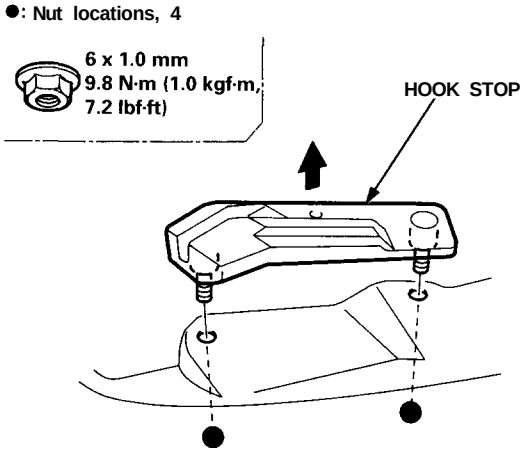

4. Installation is the reverse of the removal procedure.

NOTE:

- Make sure the roof cover opens properly and locks securely.
- Make sure the roof fits on the engine cover securely.

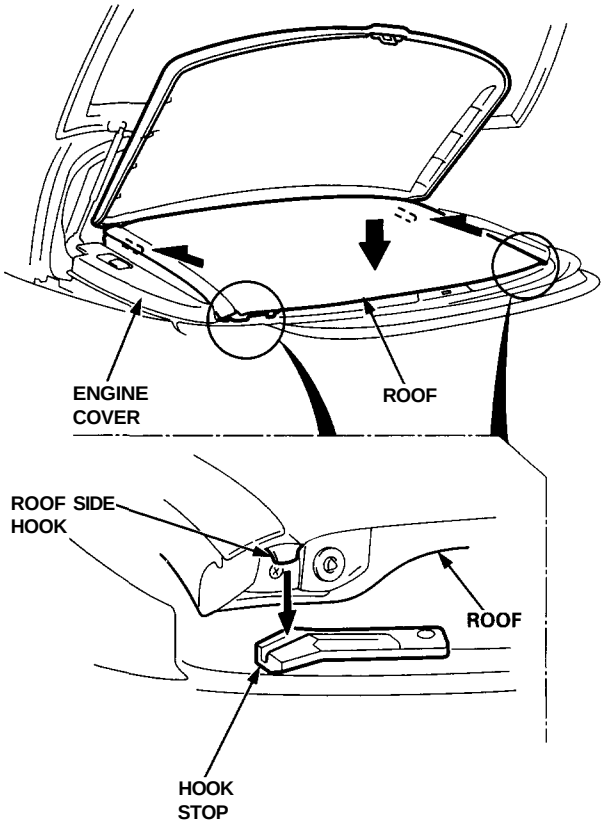

HVAC (Heating, Ventilation and Air Conditioning)

*: Read SRS precautions before working in this area

Special Tools 22–2
Component Location
  Index 22–3
Heater-Evaporator Door
  Position 22–4
Description
  Outline 22–6
  A/C Triple Pressure
    Switch 22–7
  Fan Control Unit 22–8
Wiring/Connector
  Locations 22–9
Troubleshooting
  Self–diagnosis Circuit
    Check 22–12
  Function Selection and
    Operation Check 22–13
  Symptom–to–Component
    Chart 22–14
  Climate Control Unit
    Input/Output Signals ... 22–15
Climate Control Unit
  Replacement 22–54
  Adjustment 22–55
Air Mix Control Motor
  Replacement 22–56
  Test 22–57
Mode Control Motor
  Replacement 22–57
  Test 22–58
Recirculation Control Motor
  Test 22–59
  Replacement 22–59
Vent Door Control Motor
  Test 22–60
  Replacement 22–60
In–car Temperature Sensor
  Replacement 22–61
  Test 22–61
Outside Air Temperature Sensor
  Replacement 22–62
  Test 22–62
Sunlight Sensor
  Removal 22–63
  Test 22–63
Heater Core Temperature Sensor
  Removal 22–64
  Test 22–64
Evaporator Temperature Sensor
  Removal 22–65
  Test 22–65
Aspirator Fan Test 22–66
Relay Test 22–66
Blower Unit
  Replacement 22–67
  Overhaul 22–68
A/C Service Tips
  and Precautions 22–69
A/C System Service
  Performance Test 22–70
  Pressure Test Chart 22–72
  Refrigerant Recovery 22–73
  Evacuation 22–89
  Leak Test 22–90
  Charging 22–91
Heater-Evaporator Unit
  *Replacement 22–74
  Overhaul 22–76
  ”DEF” Door Adjustment ... 22–77
  ”HEAT” Door Adjustment .. 22–77
Condenser
  Description 22–78
  Replacement 22–79
  Overhaul 22–80
Compressor
  Description 22–81
  Component Location
    Index 22–82
  Replacement 22–83
  Clutch Inspection 22–85
  Clutch Overhaul 22–86
  Relief Valve
    Replacement 22–87
  Belt Adjustment 22–88

Special Tools

Ref. No.	Tool Number	Description	Qty	Page Reference
①	*07JGG – 001010A	Belt Tension Gauge	1	22-88
②	07SAZ – 001000A	Backprobe Set	2	22-49

* Included in the Belt Tension Gauge Set, T/N 07TGG – 001000A.

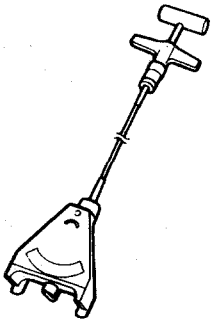

①

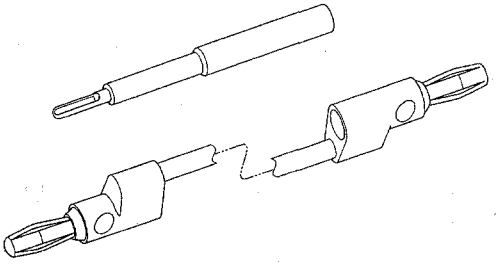

②

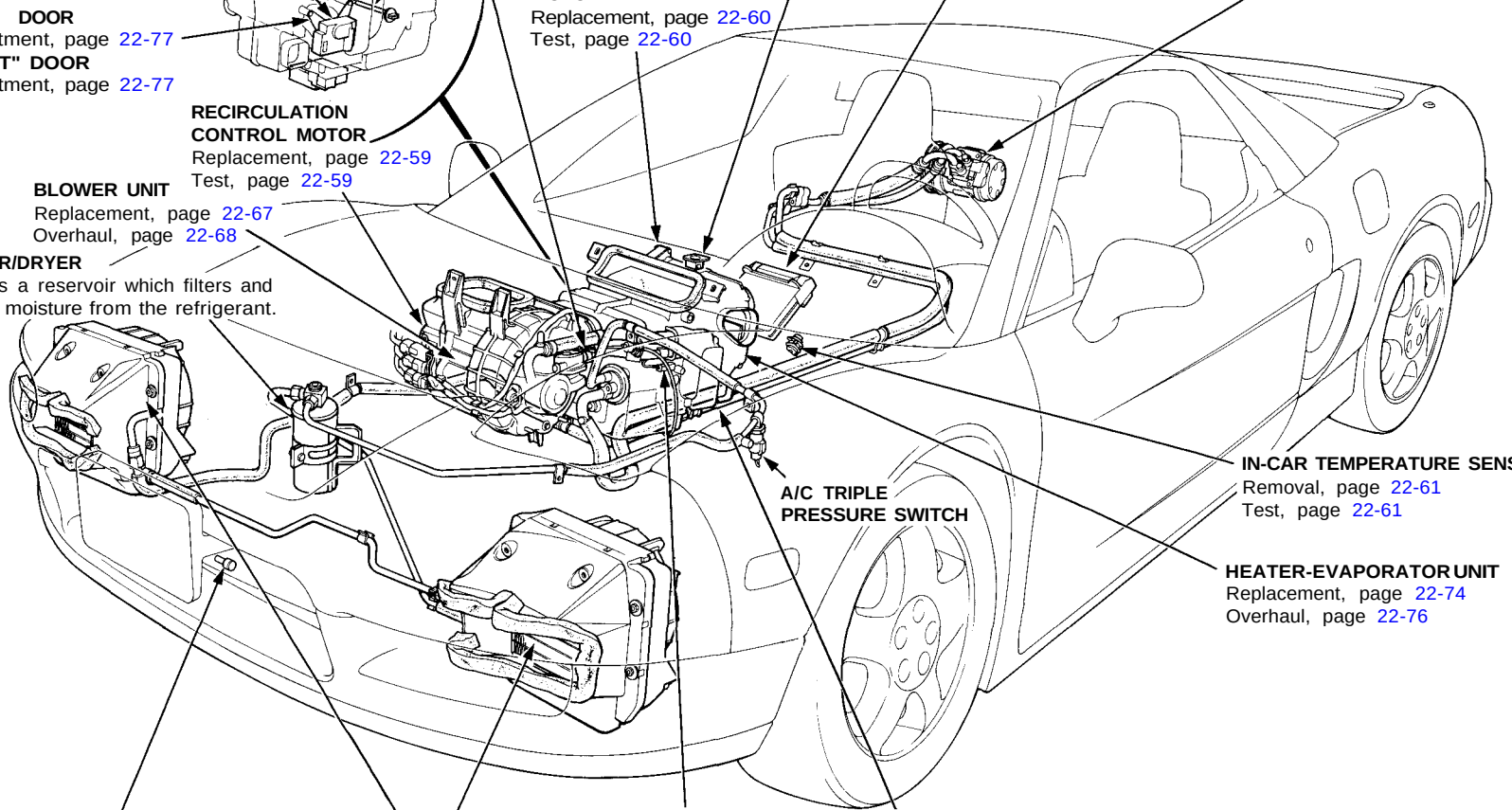

MODE CONTROL MOTOR
Replacement, page 22-57
Test, page 22-58

EVAPORATOR TEMPERATURE SENSOR
Removal, page 22-65
Test, page 22-65

SUNLIGHT SENSOR
Removal, page 22-63
Test, page 22-63

CLIMATE CONTROL UNIT
Replacement, page 22-54
Adjustment, page 22-55

COMPRESSOR (NIPPONDENSO)
Compresses the refrigerant and then forces it through the condenser.

HEATER VALVE CABLE
Adjustment, page 22-58, 22-75

VENT DOOR CONTROL MOTOR
Replacement, page 22-60
Test, page 22-60

"DEF" DOOR
Adjustment, page 22-77
"HEAT" DOOR
Adjustment, page 22-77

RECIRCULATION CONTROL MOTOR
Replacement, page 22-59
Test, page 22-59

BLOWER UNIT
Replacement, page 22-67
Overhaul, page 22-68

RECEIVER/DRYER
Serves as a reservoir which filters and removes moisture from the refrigerant.

A/C TRIPLE PRESSURE SWITCH

IN-CAR TEMPERATURE SENSOR
Removal, page 22-61
Test, page 22-61

HEATER-EVAPORATOR UNIT
Replacement, page 22-74
Overhaul, page 22-76

OUTSIDE AIR TEMPERATURE SENSOR
Removal, page 22-62
Test, page 22-62

DUAL CONDENSER
Dissipates the heat which was absorbed by the refrigerant.
Replacement, page 22-79
Overhaul, page 22-80

HEATER CORE TEMPERATURE SENSOR
Removal, page 22-64
Test, page 22-64

AIR MIX CONTROL MOTOR
Replacement, page 22-56
Test, page 22-57

Heater-Evaporator Door Position

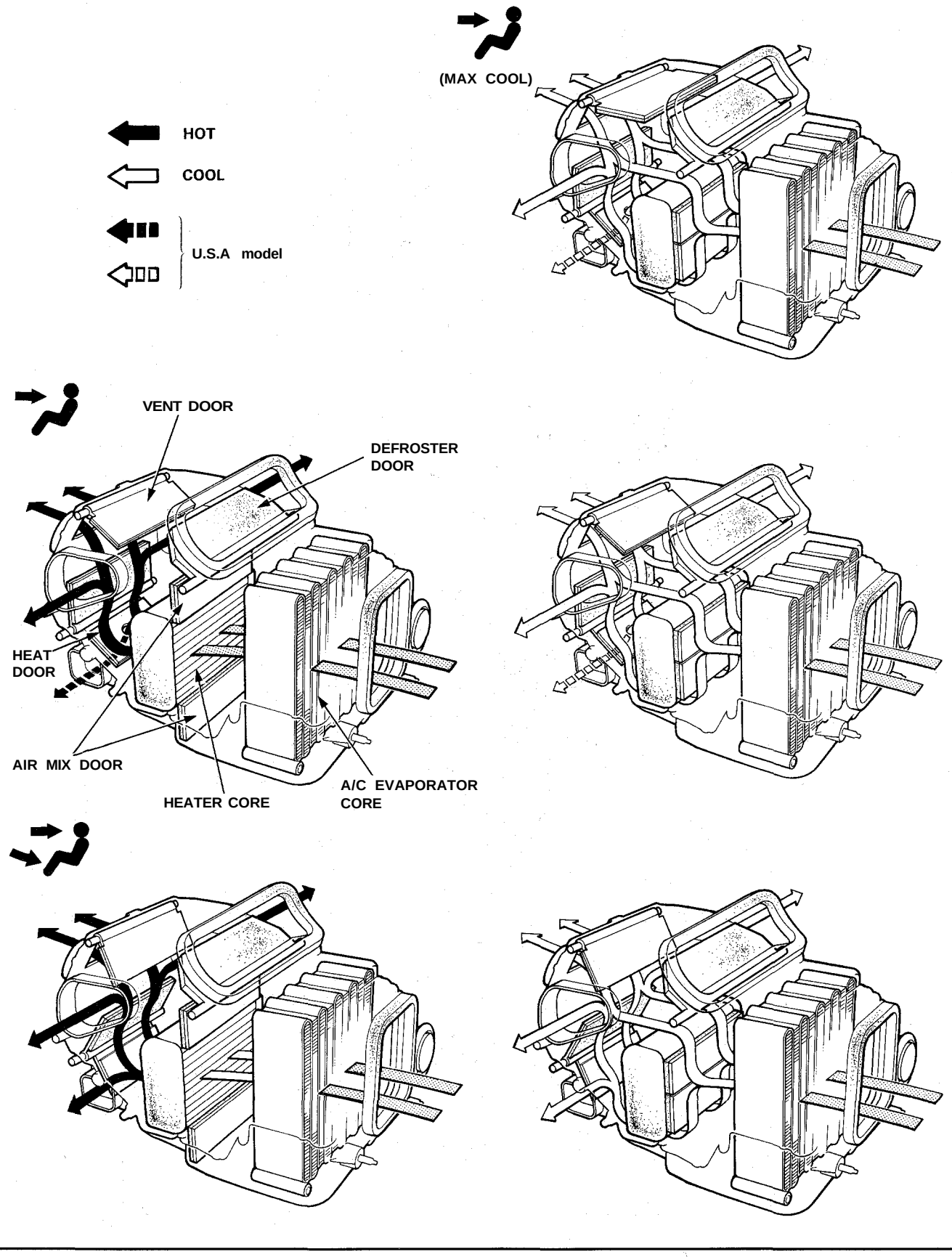

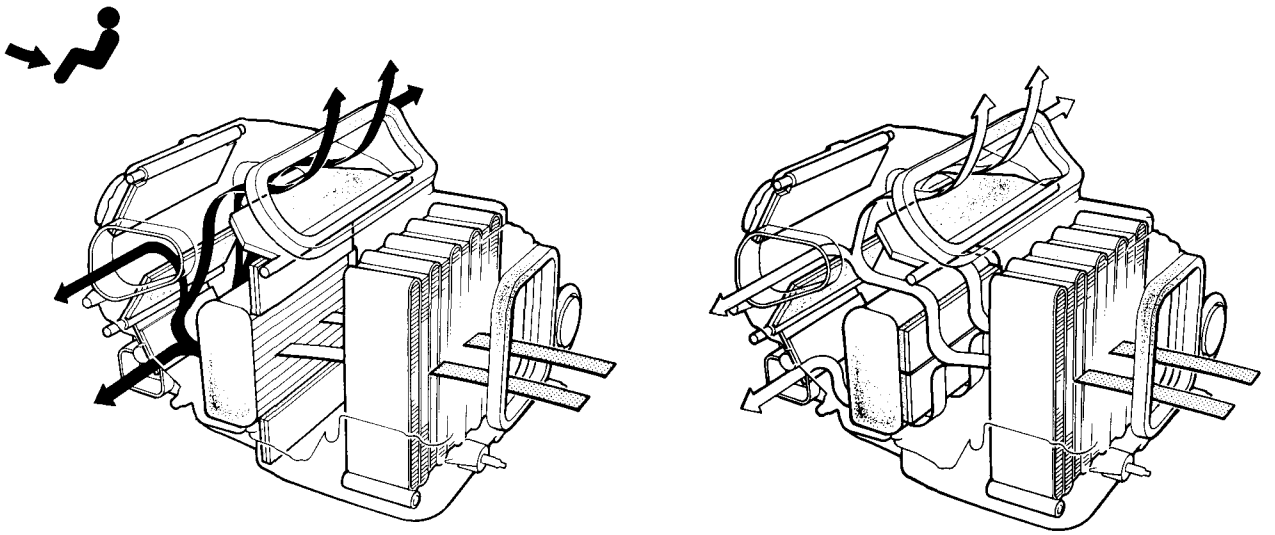

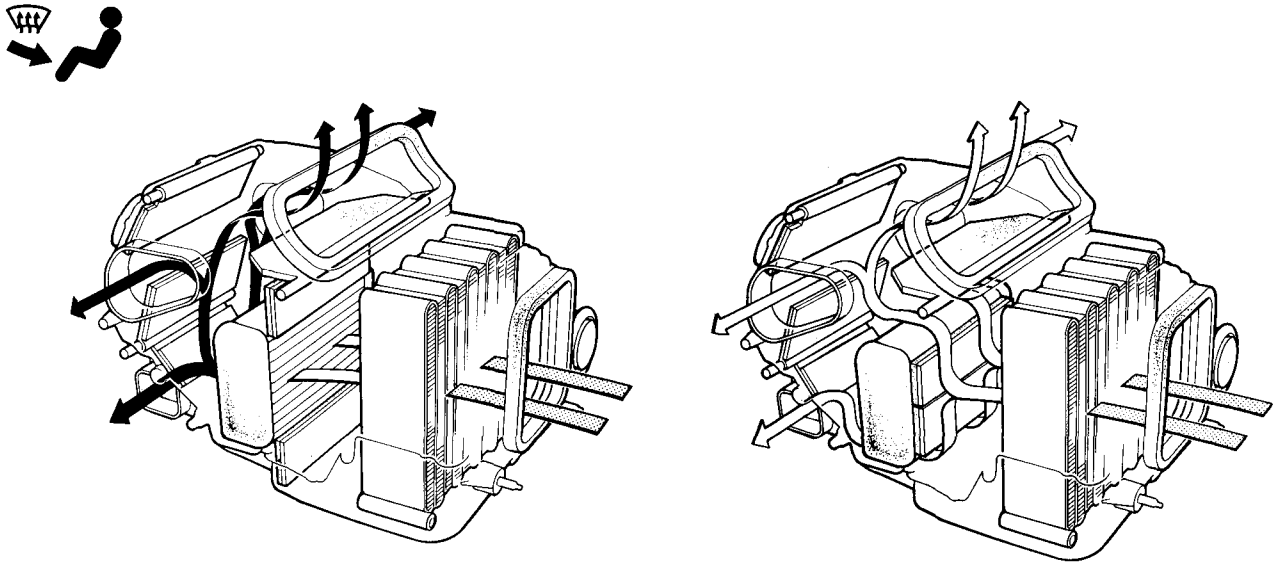

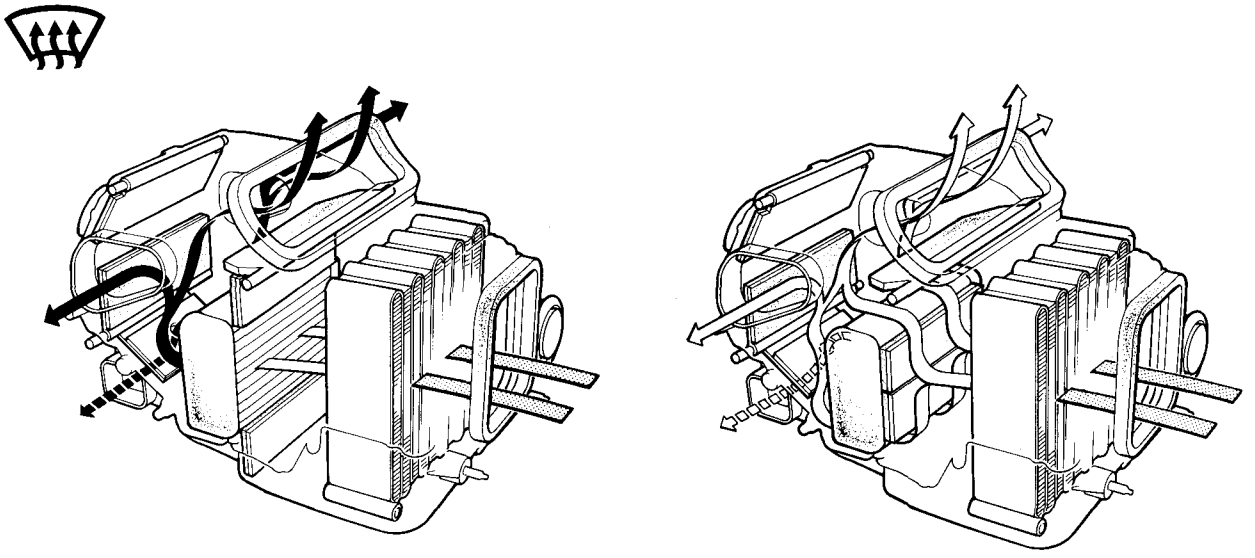

Description

Outline

The air conditioning removes the heat from the passenger compartment via the route shown below.
Using the refrigerant (R-134a)

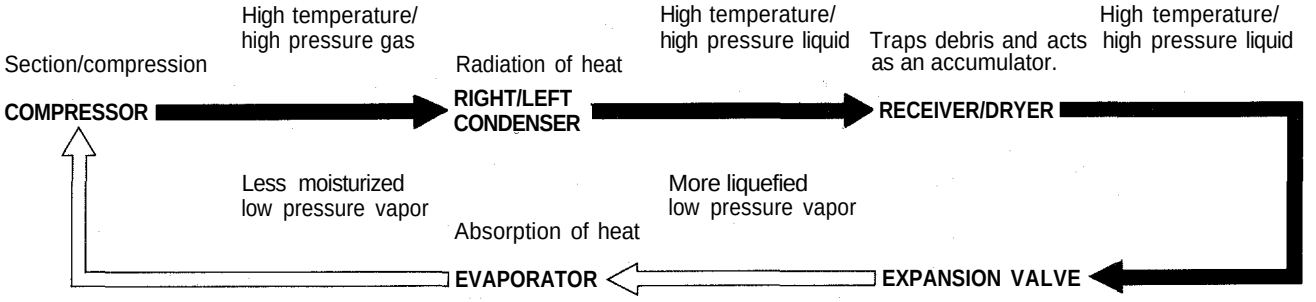

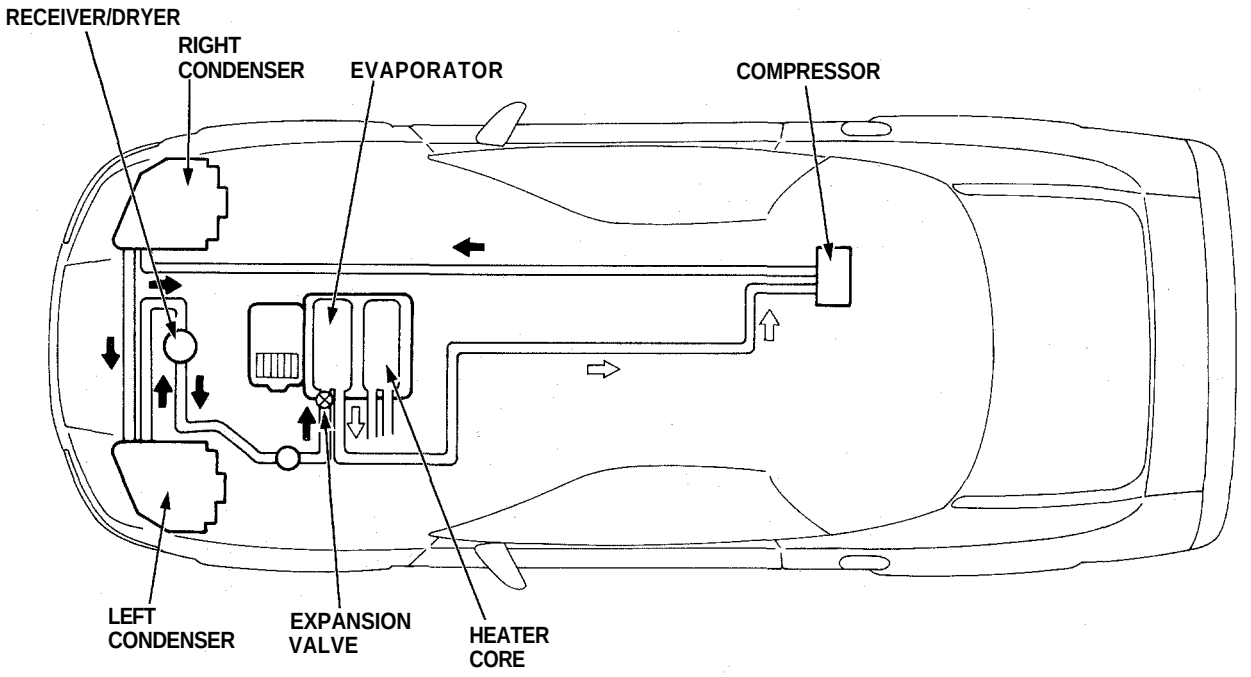

This vehicle uses HFC-134a (R-134a) refrigerant which does not contain chlorofluorocarbons. Pay attention to the following service items:

- Do not mix refrigerants CFC-12 (R-12) and HFC-134a (R-134a). They are not compatible.
- Use only the recommended polyalkyleneglycol (PAG) refrigerant oil (ND-OIL 8) designed for the R-134a compressor. Intermixing the recommended (PAG) refrigerant oil with any other refrigerant oil will result in compressor failure.
- All A/C system parts (compressor, discharge line, suction line, evaporator, condenser, receiver/dryer, expansion valve, O-rings for joints) have to be proper to refrigerant R-134a. Do not confuse with R-12 parts.
- Use a halogen gas leak detector designed for refrigerant R-134a.
- R-12 and R-134a refrigerant servicing equipment are not interchangeable. Only use a Recovery/Recycling/Charging System that is U.L.-listed and is certified to meet the requirements of SAE J2210 to service R-134a air conditioning systems.
- Always recover the refrigerant R-134a with an approved Recover/Recycling/Charging System, before disconnecting any A/C fitting.

A/C Triple Pressure Switch

Construction

The A/C triple pressure switch consists of a High-Low pressure switch (A/C pressure switch A) and a Middle pressure switch (A/C pressure switch B).

High-Low pressure switch

If the refrigerant pressure becomes too high (due to blockage), or too low (due to leakage), the A/C triple pressure switch sends a signal to the fan control unit to prevent the compressor from operating.

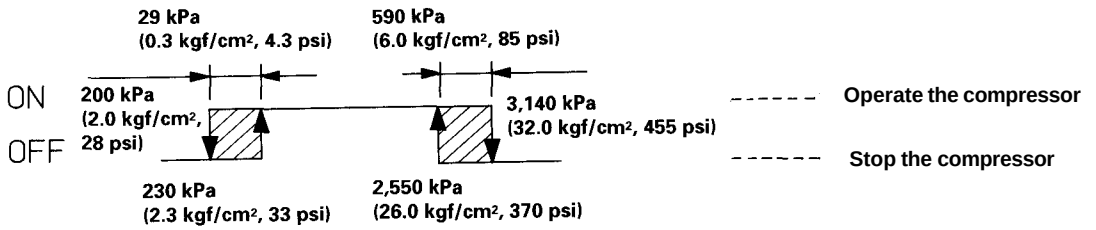

Middle pressure switch

If the refrigerant pressure goes above or below 1,550 kPa (15.5 kgf/cm^2, 220 psi), the A/C triple pressure switch sends a signal to the ECM, then the ECM operates the idle control.

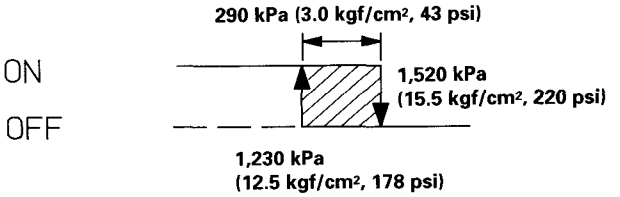

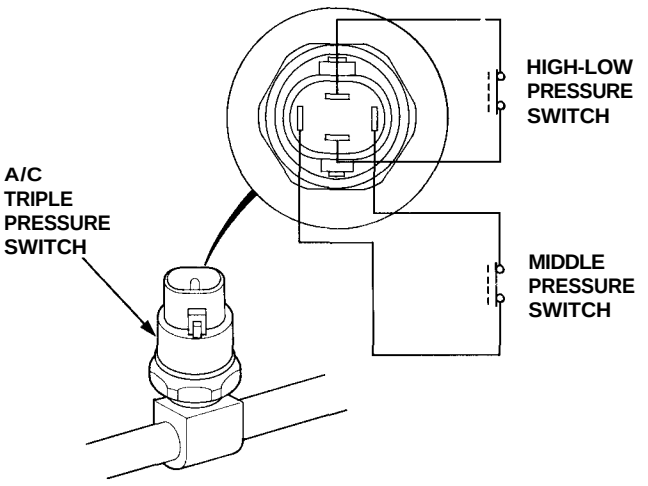

Description

Fan Control Unit

The fan control unit performs calculations based on signals from the radiator fan control sensor. It them controls the operation of radiator fan speed (High-Low), engine compartment fan, condenser fan and A/C compressor.

TEMP 1	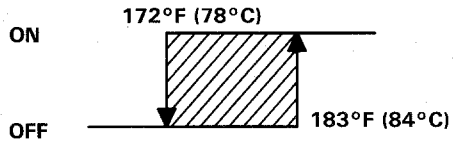	When engine coolant temperature is above 183°F (84°C), the fan control unit turns Tr1 ON and radiator fan runs at low speed.
TEMP 2	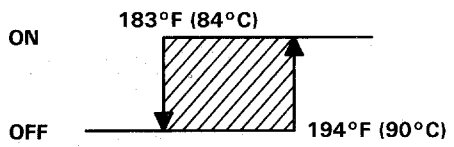	When engine coolant temperature is above 194°F (90°C), the fan control unit turns Tr2 ON, and radiator fan runs at high speed and engine compartment fan comes on.
TEMP 3	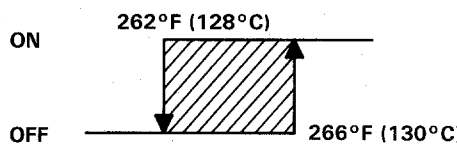	When engine coolant temperature is above 266°F (130°C), the fan control unit turns Tr3 OFF, and stops the condenser fan. Then it turns Tr4 OFF, and stops the compressor.

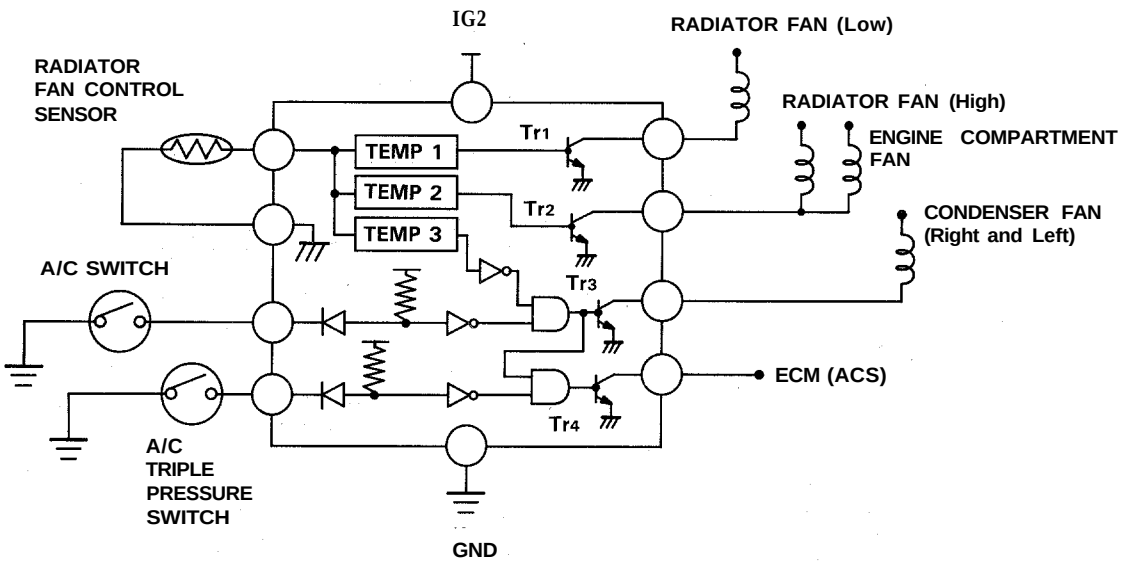

SRS components are located in this area. Review the SRS component locations, precautions, and procedures in the SRS section 24 before performing repairs or service.

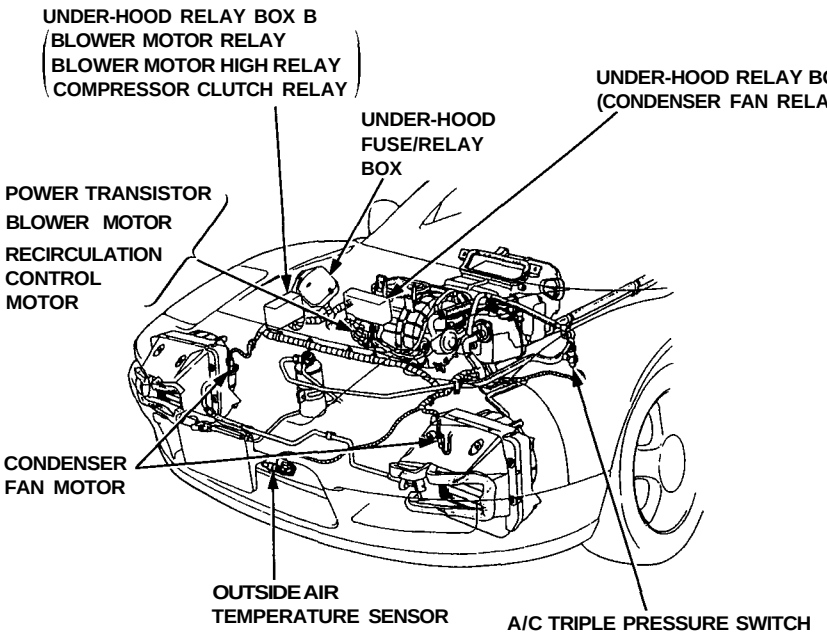

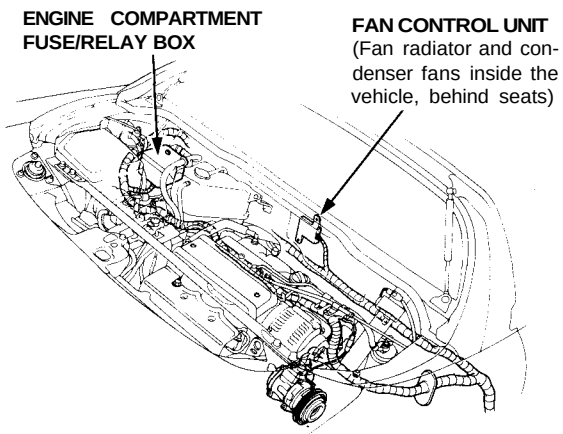

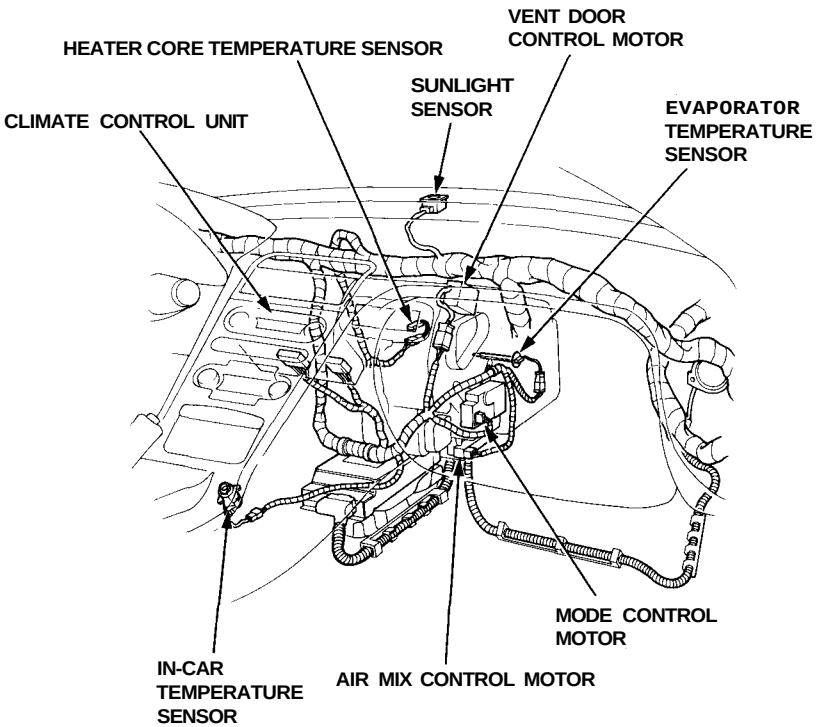

Troubleshooting

Self-diagnosis Circuit Check

The Automatic Climate Control System has a built-in self diagnosis feature. To run it, turn the ignition switch ON (II), then turn the fan speed dial to the AUTO position. Set the temperature control dial to 60°F (18°C), then gradually move the dial up the temperature range to 90°F (32°C). At each temperature setting, push both the AUTO and OFF buttons on the control unit at the same time. Wait for at least one minute for the system to readjust and check for problems. If any problems are found in circuits "A" through "I", the system will indicate which circuit has the problem by lighting the respective indicator light.

NOTE: The climate control unit does not memorize which self-diagnosis indicator lights come on. If you turn the ignition switch OFF, the indicator light memory will be lost.

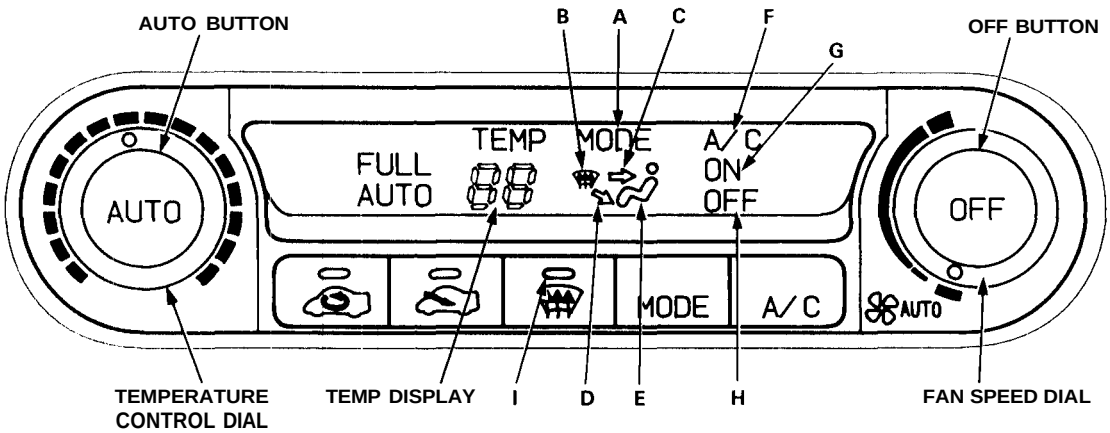

	INDICATOR	COMPONENT WITH PROBLEM	POSSIBLE CAUSE	Refer to PAGE
A	MODE	IN-CAR TEMPERATURE SENSOR	Open or short circuit	22-16
B		OUTSIDE AIR TEMPERATURE SENSOR	Open or short circuit	22-18
C		SUNLIGHT SENSOR	Open or short circuit	22-20
D		HEATER CORE TEMPERATURE SENSOR	Open or short circuit	22-22
E		EVAPORATOR TEMPERATURE SENSOR	Open or short circuit	22-24
F	A/C	AIR MIX CONTROL MOTOR	Open or short circuit Air mix door stuck	22-26
G	ON (A/C)	MODE CONTROL MOTOR	Open position signal circuit Mode door stuck	22-28
H	OFF (A/C)	RECIRCULATION CONTROL MOTOR	Open position signal circuit	22-30
I	LED on defroster button	VENT DOOR CONTROL MOTOR	Open or short circuit Vent door stuck	22-32

NOTE:

- When you turn the ignition switch OFF, the self-diagnosis function will be canceled.
- After completing repair work, run the self-diagnosis again to make sure that there are no other malfunctions.

Function Selection and Operation Check

This check will quickly and automatically select and operate all functions of the climate control system, in the combinations and sequence shown below. It may help clarify a problem, or identify one that didn't show up when you perform the self-diagnosis circuit check.

Turn the FAN switch to AUTO, then push in both the MODE and AUTO buttons and hold them in while you start the engine. The control unit will then automatically run the check in eight steps, one step every five seconds.

To stop at one of those steps, push the MODE button; to continue, push it again for each step after that.

Pushing the OFF button or turning the ignition OFF, will turn off the check.

Check the temperature, volume, and source of the air flow, and compare it to what the chart shows it should be.

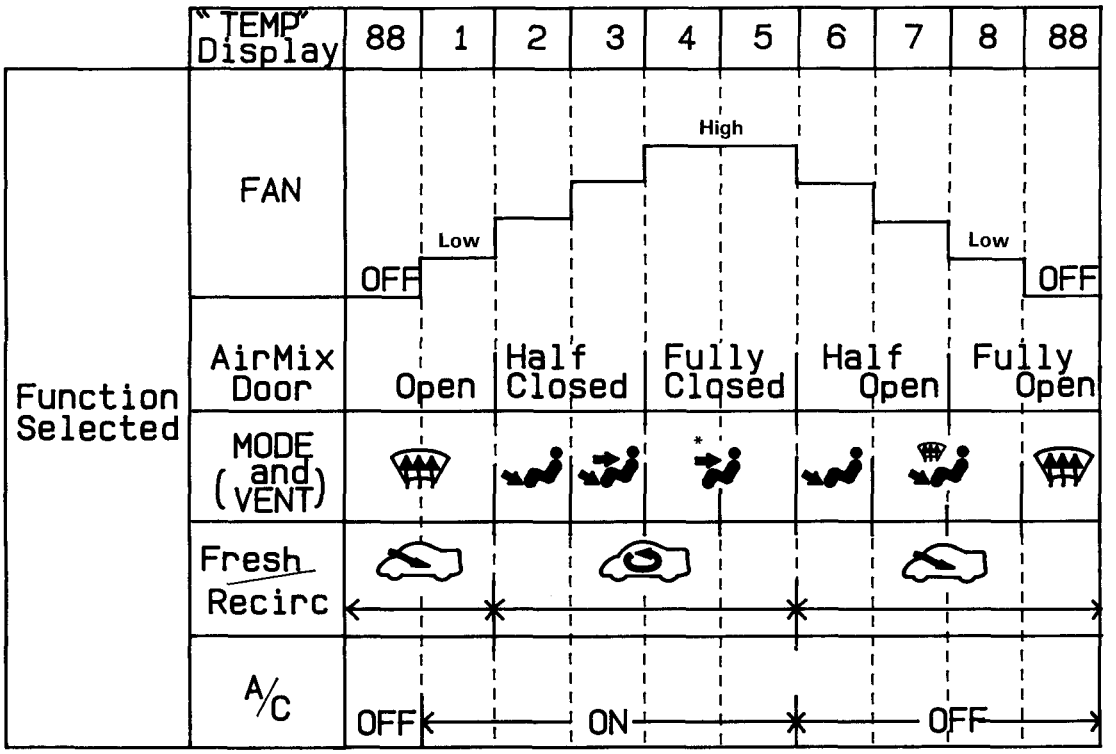

* Vent door fully open.

Troubleshooting

Symptom-to-Components Chart

Use this chart if the self-diagnosis checks don't identify any cause for the symptom.
Across each row in the chart, the potential sources of a symptom are ranked in the order they should be inspected, starting with ①. Find the symptom in the left column, read across to the most likely source, then refer to the page listed at the top of that column. If inspection shows the component is OK, try component ②, etc.

PAGE / SYSTEM / SYMPTOM		POWER CIRCUITS TO CLIMATE CONTROL UNIT	IN-CAR TEMPERATURE SENSOR	OUTSIDE AIR TEMPERATURE SENSOR	SUNLIGHT SENSOR	HEATER CORE TEMPERATURE SENSOR	EVAPORATOR TEMPERATURE SENSOR	AIR MIX CONTROL MOTOR	MODE CONTROL MOTOR	RECIRCULATION CONTROL MOTOR	VENT DOOR CONTROL MOTOR	BLOWER MOTOR	BLOWER SPEED CONTROLS	A/C SYSTEM	CONDENSER FAN	COMPRESSOR CLUTCH
		22-34	22-16	22-18	22-20	22-22	22-24	22-26	22-28	22-30	22-32	22-36	22-40	22-42	22-44	22-48
Climate control system does not work at all.		①														
No air from blower.		①				②						③				
No cool air from blower.			①	②			③									
No hot air from blower.			②					①								
Actual temperature is different from set temperature.		②	③	①												
Blower motor does not run.												①				
Blower motor speed does not change.						②	③						①			
Compressor clutch does not engage, and the condenser fan does not run.	*If engine coolant temperature is above 266°F (130°C)															
	If engine coolant temperature below 266°F (130°C)													①		
Condenser fan does not run, but the compressor runs normally.															①	
Compressor clutch does not engage, but the condenser fan runs normally.				②			③									①

*Cool down engine coolant, and recheck. Because the fan control unit turns off the compressor and condenser fan at temperature above 266°F (130°C).

Climate Control Unit Input/Output Signals

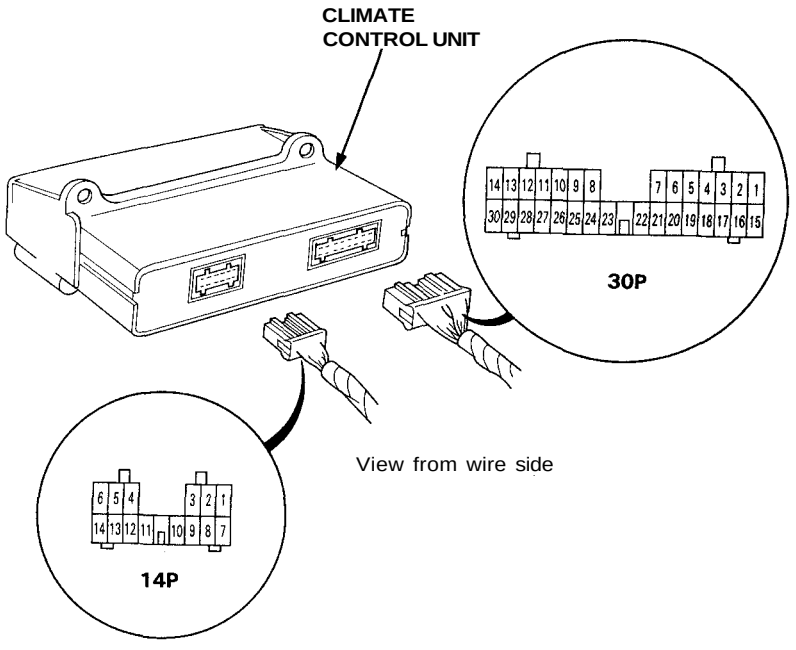

30P:

No.	Wire Color	Signal		No.	Wire Color	Signal	
1	GRN/BLU	Air Mix Control Motor (COOL ⊕)	Output	16	RED/BLU	Mode DEF	Output
2	RED/YEL	Mode VENT	Input	17	LT GRN/YEL	Recirc. (⊕)	Input
3	BLU/ORN	Fresh (⊕)	Input	18			
4				19	YEL/BLU	Vent Motor (OPEN ⊕)	Output
5	YEL/BLK	Vent Motor (CLOSE ⊕)	Output	20	GRY	MODE 1	Input
6	GRN/WHT	MODE 3	Input	21	PNK/BLK	MODE 2	Input
7	BLU	MODE 4	Input	22	BLK/BLU	Blower Feedback	Input
8	LT GRN/BLK	Power Transistor Base	Output	23			
9	LT GRN/RED	RECIRC. Position Signal	Output	24	BLK	GND	Output
10	BLU/GRN	FRESH Position Signal	Output	25	BLK	GND	Output
11	RED/BLK	Light Switch	Input	26			
12	ORN/WHT	Blower High Relay	Input	27	YEL/BLK	IG2	Input
13	GRY/BLK	A/C Signal	Input	28	YEL/BLK	IG2	Input
14	BRN/YEL	Asperator Fan	Output	29			
15	GRN/BLK	Air Mix Control Motor (HOT ⊕)	Output	30	WHT/YEL	+B	Input

14P:

No.	Wire Color	Signal		No.	Wire Color	Signal	
1				8	BRN	Outside Air Temperature Sensor	Output
2	ORN/BLU	Sunlight Sensor	Output	9	RED/GRN	In-car Temperature Sensor	Output
3	LT GRN	Evaporator Temperature Sensor	Output	10			
4	GRN	Air Mix Control Motor Potential	Input	11	GRN/RED	+5 V	Output
5				12	RED	Illumination Control	Output
6	YEL/WHT	Vent Motor Potential	Input	13	GRN	Engine Revolution Pulse	Input
7	LT BLU	Heater Core Temperature Sensor	Output	14	BLK/GRN	Sensor GND	Input

Climate Control Unit

Replacement

SRS components are located in this area. Review the SRS component locations, precautions, and procedures in the SRS section 24 before performing repairs or service.

1. Remove the clock (see section 23).
2. Remove the two screws behind the clock, then remove the center air vent (see section 20).

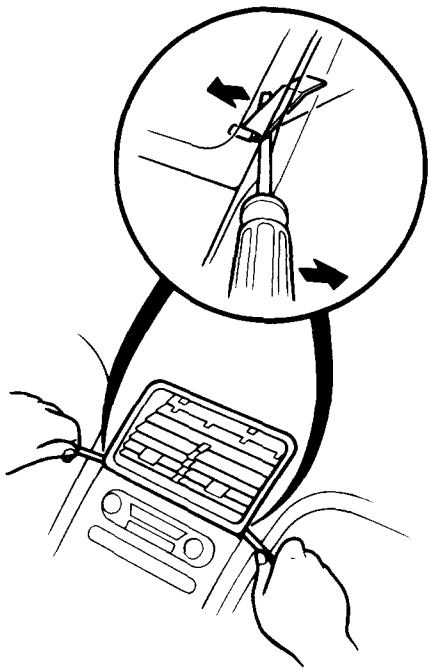

3. Take out the ashtray and remove the two screws from under the ashtray.

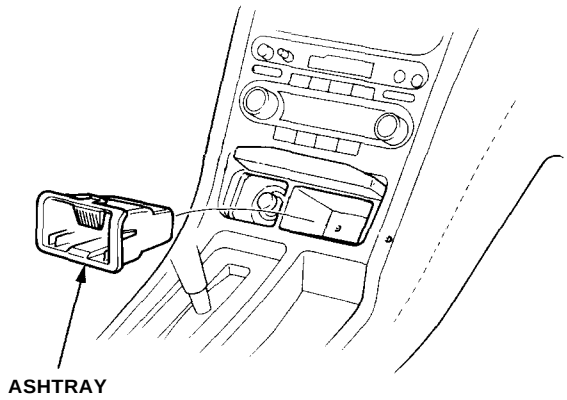

4. Remove the four screws, then remove the center armrest.

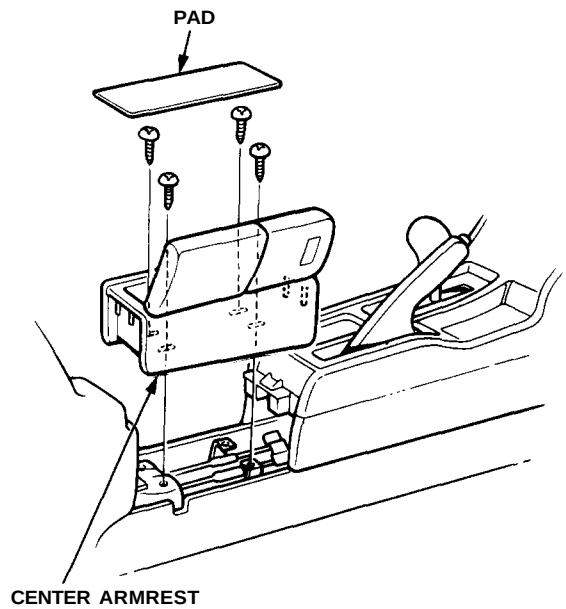

5. Remove the three screws and center console panel, then disconnect the 3P connector and 4P connector from the floor wire harness.

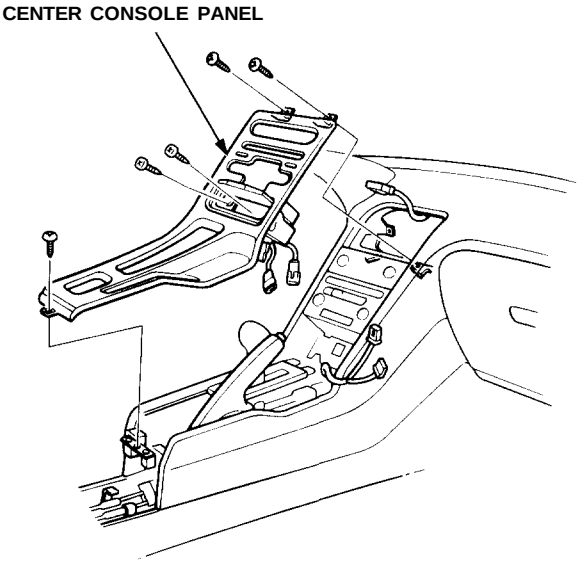

6. Remove the four screws, then disconnect the 14P and 30P connectors from the automatic climate control unit and remove it.

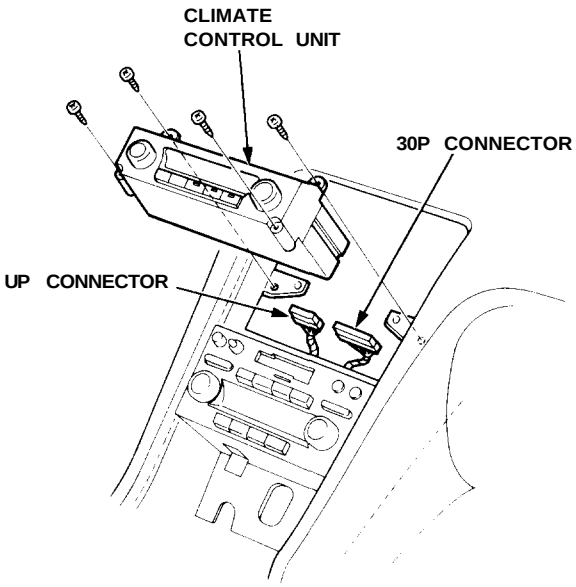

7. Install in the reverse order removal.

Adjustment

The calibration switch can raise or lower the set temperature by ±3°F (1.5°C) in relation to the digitally-displayed temperature.

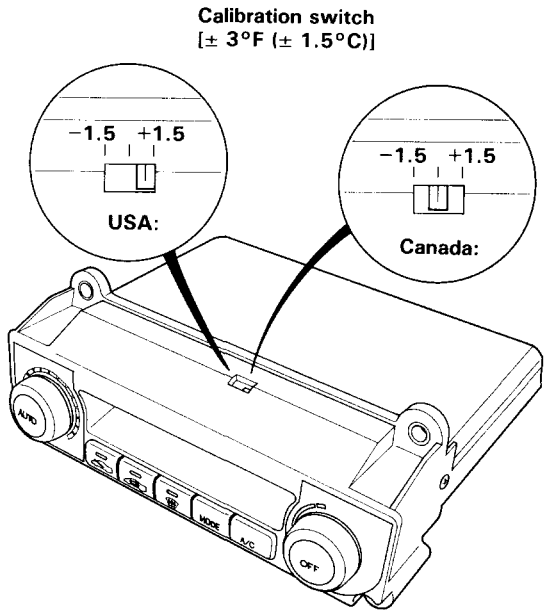

Air Mix Control Motor

Replacement

1. Disconnect the heater valve cable from the air mix control motor.

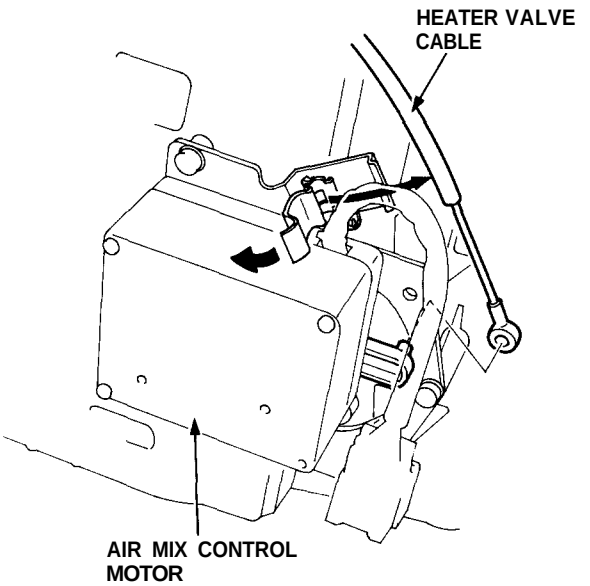

2. Remove the three screws and the air mix control motor.

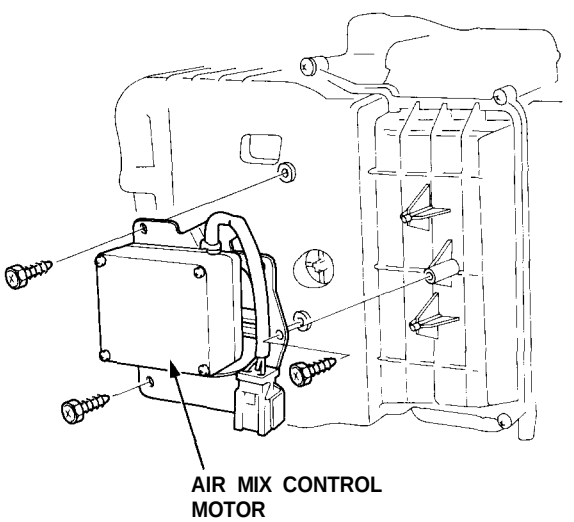

3. Install the air mix control motor in the reverse order of removal. Then apply battery voltage (see page 22-57), and watch the door move.

   - Make sure that the air mix door moves smoothly without binding.
   - Make sure the motor doesn't pull the air mix door too far.

4. If necessary, to adjust the heater valve cable:

   - Set the air mix control motor at COOL position (see page 22-57) with the cable disconnected at the valve.
   - Hold the end of the cable housing against the stop on the cable. Then snap the clamp down over the housing.
   - After adjusting the cable, make sure that the air mix control motor still moves smoothly without binding.

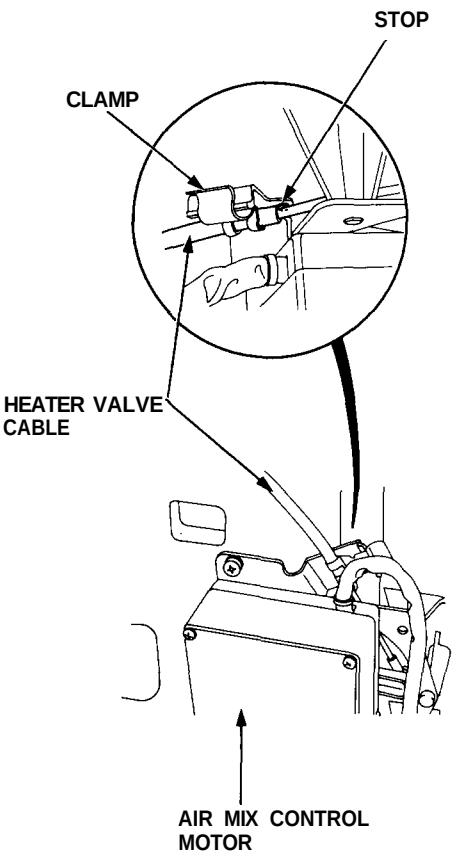

Air Mix Control Motor

Test

1. Connect battery power to the No. 1 terminal of the air mix control motor, then connect ground to the No. 2 terminal; the air mix control motor should run, and stop at HOT.
   If it doesn't, reverse the connections; the air mix control motor should run, and stop at COOL.

   NOTE: If the air mix control motor does not run, remove it, and check the air mix control linkage and doors for smooth movement. If the air mix control linkage and doors move smoothly, replace the air mix control motor.

2. Measure resistance between the No. 3 terminal and No. 5 terminal; it should be approx. 10 kΩ.

3. Measure resistance between the No. 3 terminal and No. 4 terminal; if should be approx. 0.6 kΩ at COOL and approx. 9.4 kΩ at HOT.

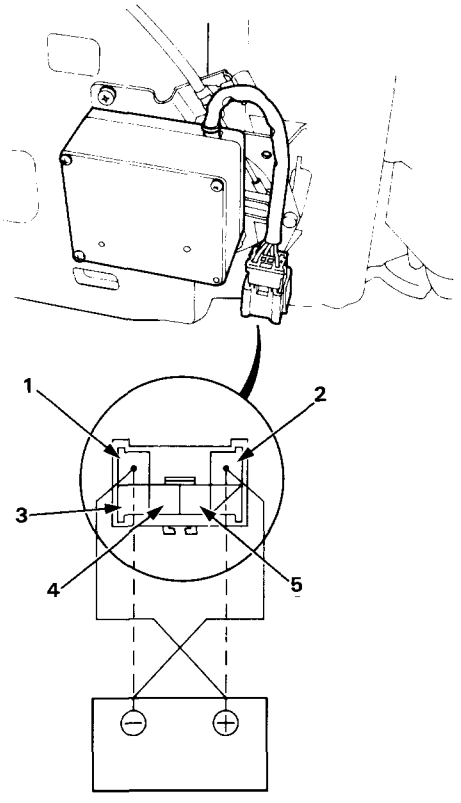

Mode Control Motor

Replacement

1. Remove the three screws and mode control motor.

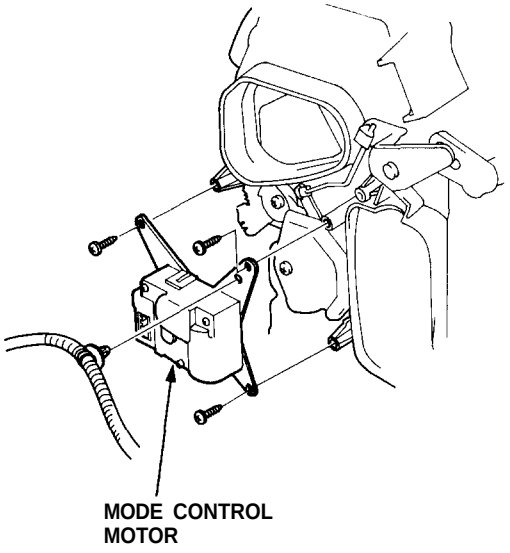

2. Install the mode control motor in the reverse order of removal. Then apply battery voltage (see page 22-58), and watch the doors move.

   - Make sure that the HEAT and DEF doors moves smoothly without binding.
   - Make sure the motor doesn't pull the HEAT and DEF doors too far.

Mode Control Motor

Test

1. Disconnect the mode control motor connector, turn the ignition switch ON (II), and move the blower switch to the middle setting.

2. Connect battery power to the No. 1 terminal of the mode control motor, then connect ground to the No. 2 terminal. The mode control motor should run, and stop at VENT.
   If it doesn't, reverse the connections; the mode control motor should run, and stop at DEF.

   NOTE: If the mode control motor does not run, remove it, and check the mode control linkage and doors for smooth movement. If the mode control linkage and doors move smoothly, replace the mode control motor.

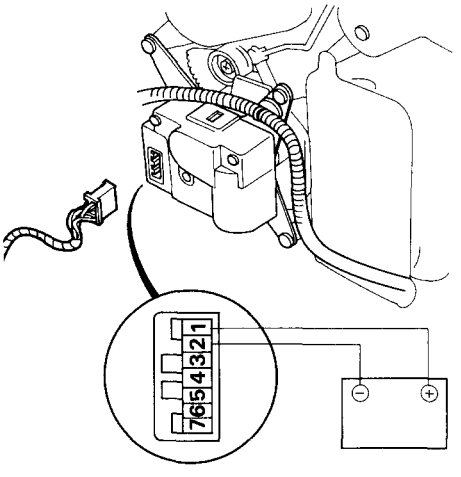

3. Plug the connector back into the motor. Operate the mode switch on the climate control unit to each mode. Verify that the mode control motor has moved to the selected position by checking the air flow for the mode selected.

   NOTE: If the motor did not move, turn the ignition switch OFF, and disconnect the mode control motor connector. Turn the ignition switch ON (II), then connect battery power to No. 1 and No. 2 terminals as shown in step 2. Power the mode control motor to move the doors to the mode selected.

4. Disconnect the mode control motor connector at each mode selected and check for continuity between the motor terminals according to the table below.

5. Replace the mode control motor if there is no continuity for any one mode selected.

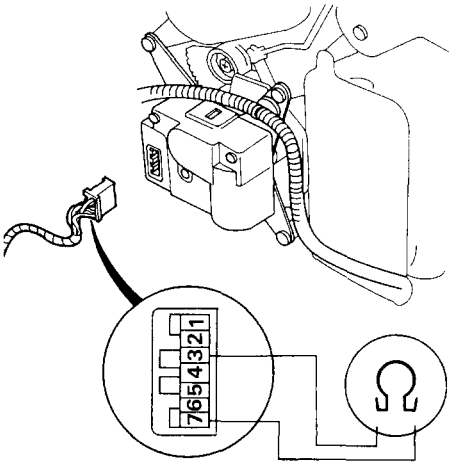

Terminal / LED symbol	3	4	5	6	7
	○				○
	○		○		
	○	○			
	○	○	○		○
	○	○	○	○	

Recirculation Control Motor

Replacement

1. Remove the blower unit (see page 22-67)

2. Remove the three screws and the recirculation control motor cover from the blower unit.

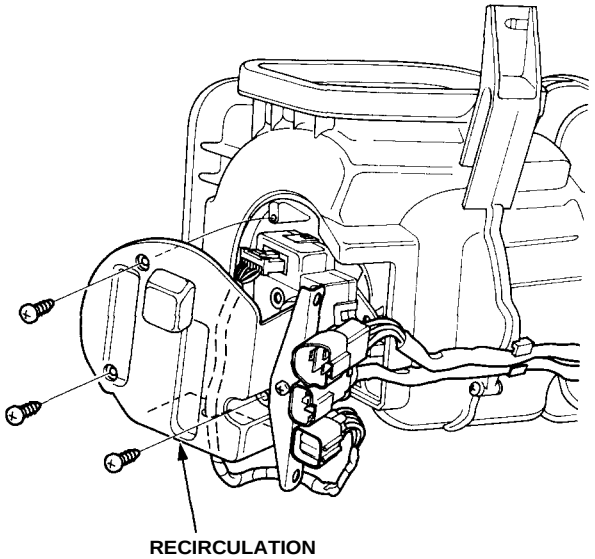

RECIRCULATION CONTROL MOTOR COVER

3. Remove the three screws and the recirculation control motor.

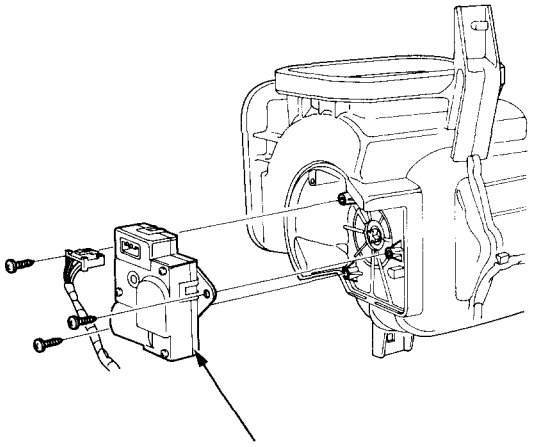

RECIRCULATION CONTROL MOTOR

4. Install the recirculation control motor in the reverse order of removal. Then apply battery voltage, and watch the door movement.

   - Make sure that the recirculation door moves smoothly without binding.
   - Make sure the motor doesn't pull the door too far.

Test

1. Connect battery power to the No. 1 terminal of the recirculation control motor, then connect ground to the No. 2 terminal; the recirculation control motor should run, and stop at REC.
   If it doesn't, reverse the connections; the recirculation control motor should run, and stop at FRE.

   NOTE: If the recirculation control motor does not run, remove it, and check the recirculation control linkage and door for smooth movement. If the recirculation control linkage and door move smoothly, replace the recirculation control motor.

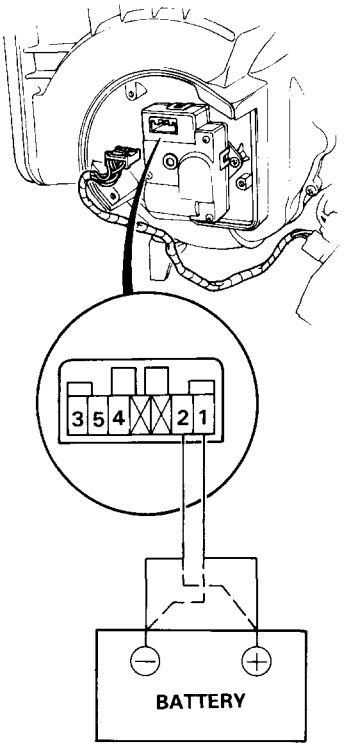

2. Check for continuity between the terminals of the recirculation control motor according to the table.

Terminal / Position	3	4	5
	○	○	
	○		○

Vent Door Control Motor

Replacement

1. Remove the three screws and vent door control motor.

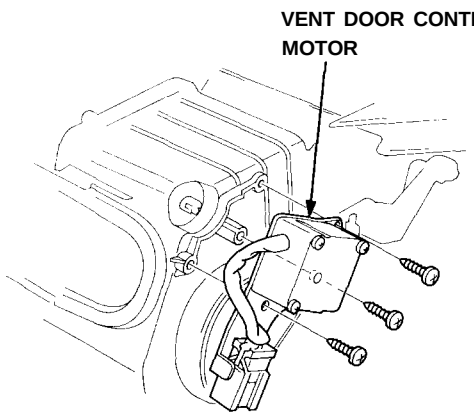

2. Install the vent door control motor in the reverse order of removal. Then apply battery voltage, and watch the door move.

   - Make sure that the vent door moves smoothly without binding.
   - Make sure the motor doesn't pull the vent door too far.

Test

1. Connect battery power to the No. 1 terminal of the vent door control motor, then connect ground to the No. 2 terminal; the vent door control motor should run, and stop at CLOSE.
   If it doesn't, reverse the connections; the vent door control motor should run, and stop at OPEN.

   NOTE: If the vent door control motor does not run, remove it, and check the vent door control linkage and door for smooth movement. If the vent door control linkage and door move smoothly, replace the vent door control motor.

2. Measure resistance between the No. 3 terminal and No. 5 terminal, it should be approx. 10 kΩ.

3. Measure resistance between the No. 3 terminal and No. 4 terminal, it should be approx. 0.6 kΩ atOPEN and approx. 9.4 kΩ at CLOSE.

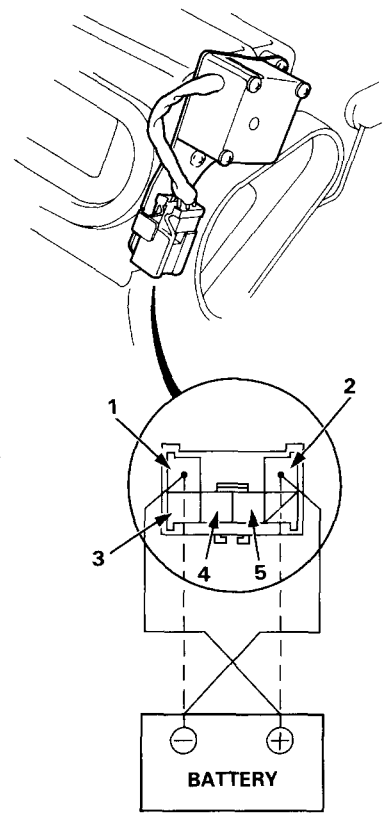

In-car Temperature Sensor

Removal

The in-car temperature sensor assembly includes a small fan (aspirator fan) to draw air past the sensor (see page 22-66).

SRS components are located in this area. Review the SRS component locations, precautions, and procedures in the SRS section 24 before performing repairs or service.

1. Remove the center console panel (see page 22-54).
2. Remove the two screws and the in-car temperature sensor from the under side of the center console panel. Be careful not to damage the center console panel.

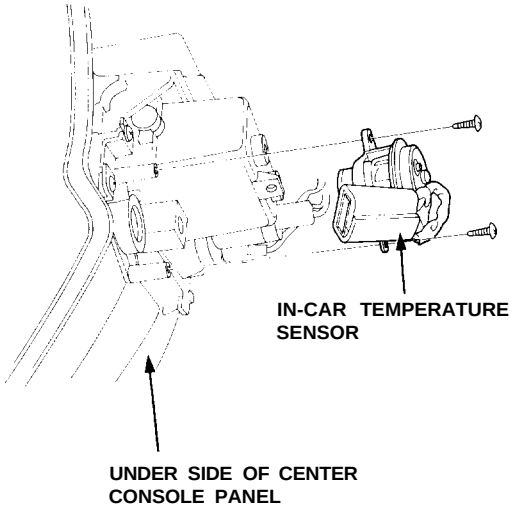

Test

Compare the resistance reading between the No. 1 and No. 2 terminals of the in-car temperature sensor with specifications shown in the following graph: It should be within specification.

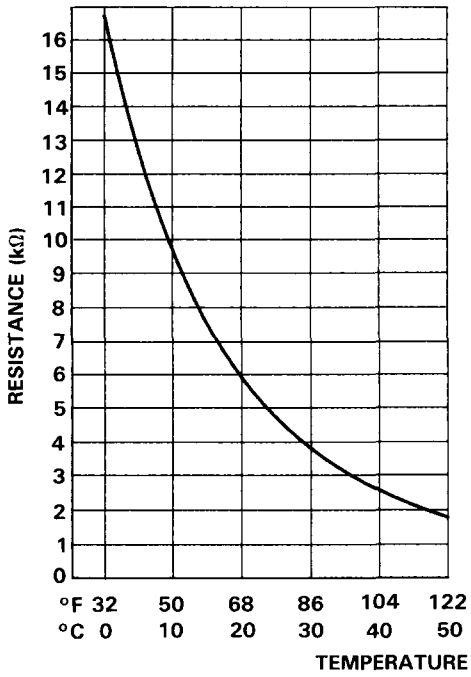

CAUTION: The sensor uses a thermistor which can be damaged if high current is applied to it during testing. Therefore, use a circuit tester that puts out a measuring current of 1 mA or less.

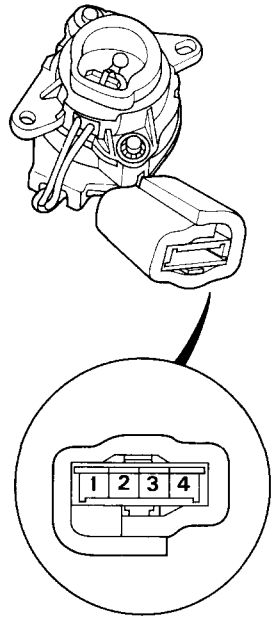

Outside Air Temperature Sensor

Removal

Remove the screw, disconnect the connector, and remove the outside air temperature sensor. Be careful not to damage the front grille and front bumper.

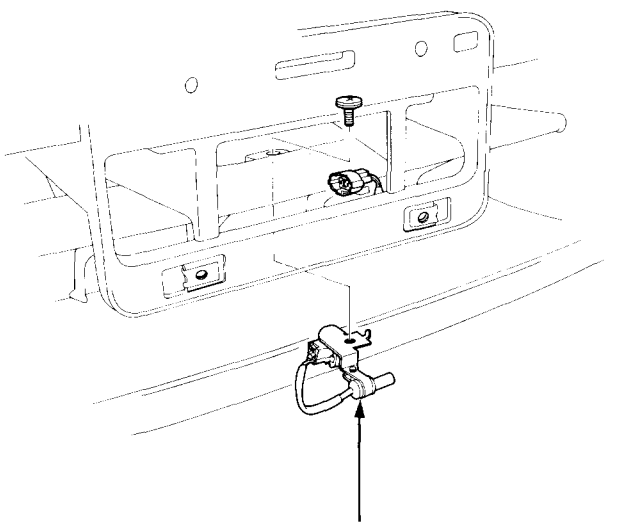

Test

Compare the resistance reading between the terminals of the outside air temperature sensor with specifications shown in the following graph: It should be within specification.

NOTE: Dip the sensor in ice water, and measure the resistance. Then pour hot water on the sensor, and check for change in resistance.

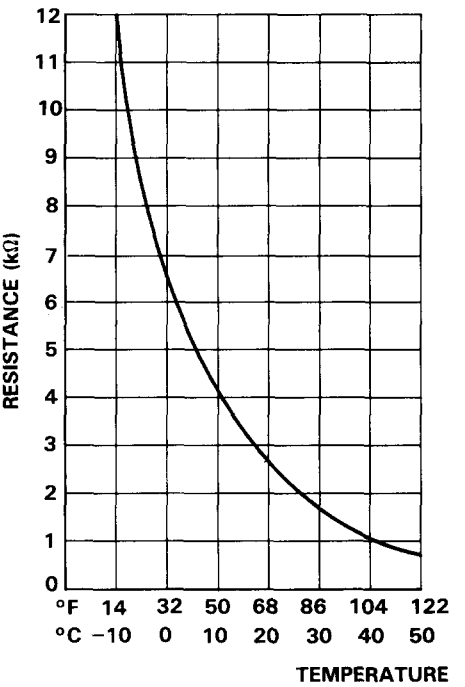

CAUTION: The sensor uses a thermistor which can be damaged if high current is applied to it during testing. Therefore, use a circuit tester that puts out a measuring current of 1 mA or less.

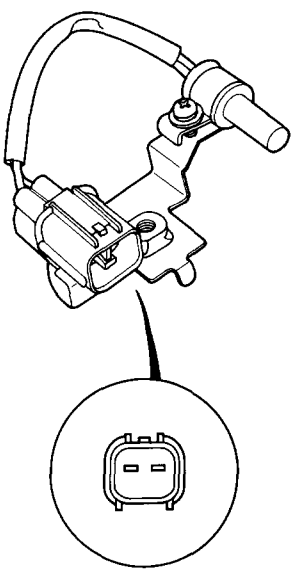

Sunlight Sensor

Removal

Protect the dashboard with a shop towel, then with a small screwdriver, carefully pry the sunlight sensor out of the dashboard and disconnect its connector.

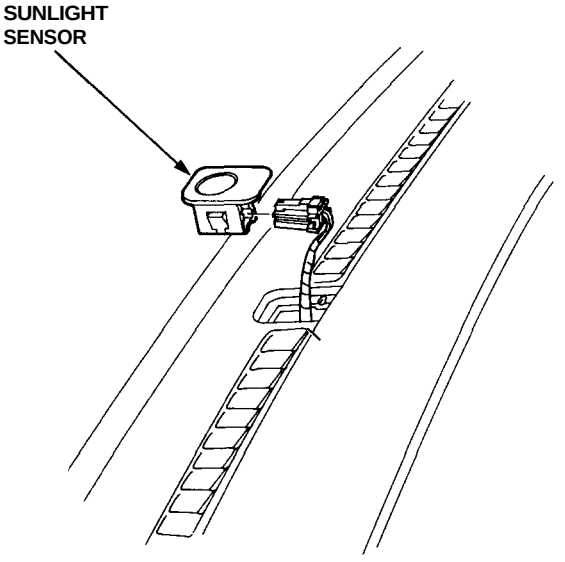

Test

Measure the voltage between the terminals with the sensor out of direct sunlight.

- With the connector connected (probe the back of it): 1.4 ± 0.2 V
- With the connector disconnected: 0.1 - 0.2 V

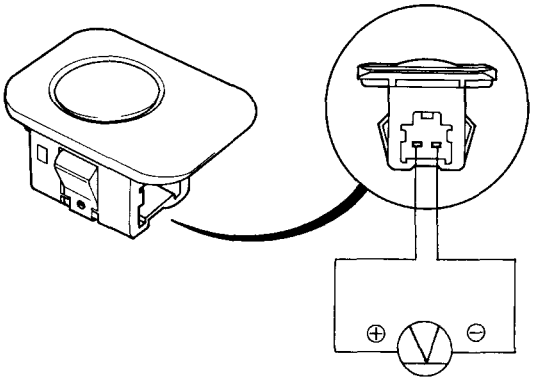

Heater Core Temperature Sensor

Removal

Disconnect the connector, remove the clamp and the heater core temperature sensor.

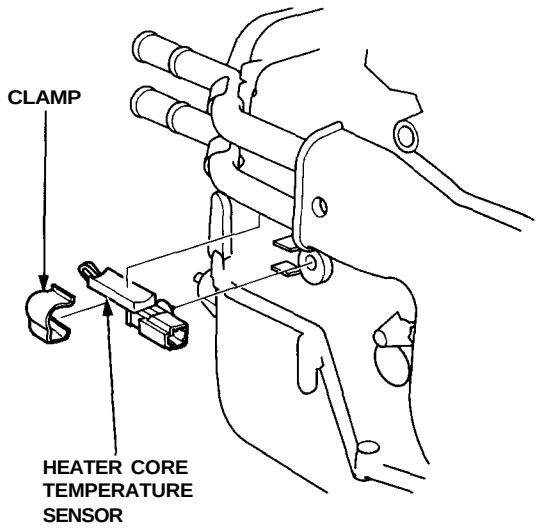

Test

Compare the resistance reading between the terminals of the heater core temperature sensor with specifications shown in the following graph: It should be within specification.

NOTE: Dip the sensor in ice water, and measure the resistance. Then pour hot water on the sensor, and check for change in resistance.

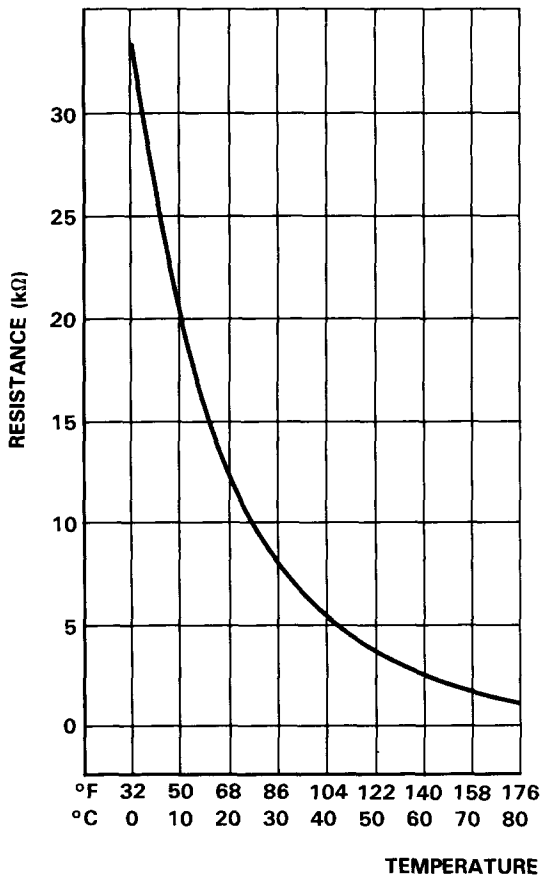

CAUTION: The sensor uses a thermistor which can be damaged if high current is applied to it during testing. Therefore, use a circuit tester that puts out a measuring current of 1 mA or less.

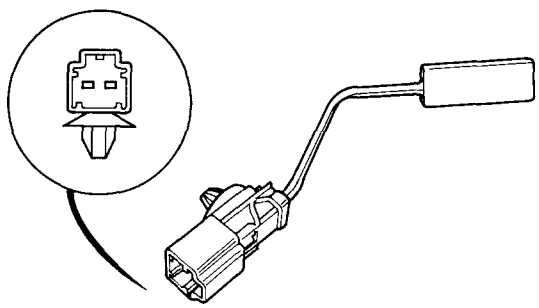

Evaporator Temperature Sensor

Removal

Give the evaporator temperature sensor a quarter turn, then pull out to remove it.

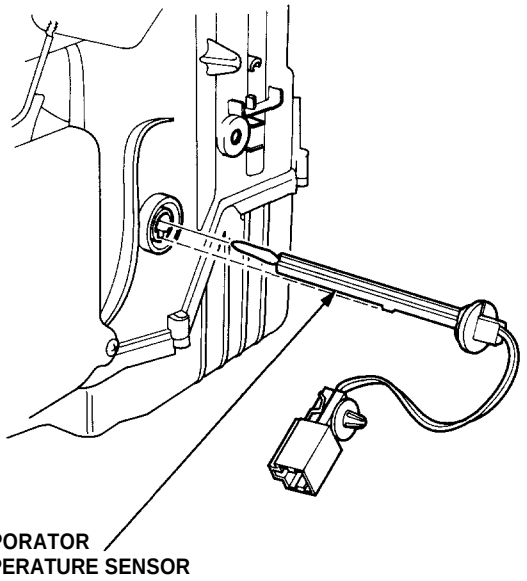

Test

Compare the resistance reading between the terminals of the evaporator temperature sensor with specification shown in the following graph: It should be within specification.

NOTE: Dip the sensor in ice water, and measure the resistance. Then pour hot water on the sensor, and check for change in resistance.

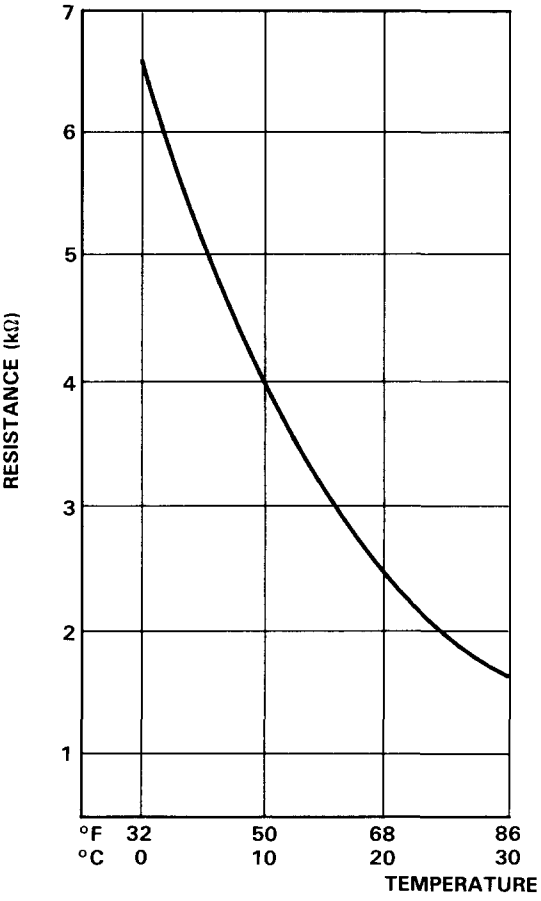

CAUTION: The sensor uses a thermistor which can be damaged if high current is applied to it during testing. Therefore, use a circuit tester that puts out a measuring current of 1 mA or less.

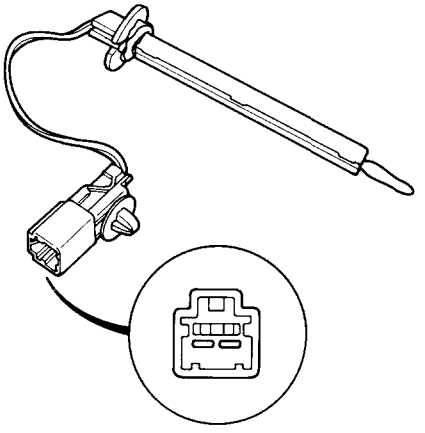

Aspirator Fan

Test

Connect battery power to the No. 3 terminal of the aspirator fan, and connect ground to the No. 4 terminal. The aspirator fan should run.

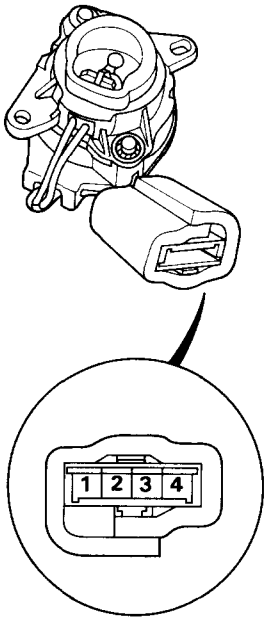

Relay

Test

There should be continuity between the C and D terminals.

There should be continuity between the A and B terminals when power and ground are connected to the C and D terminals.
There should be no continuity when power is disconnected.

- Compressor clutch relay
- Blower motor relay
- Blower motor high relay

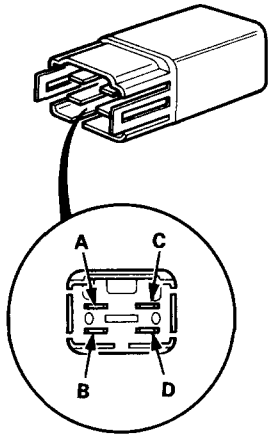

- Condenser fan relay

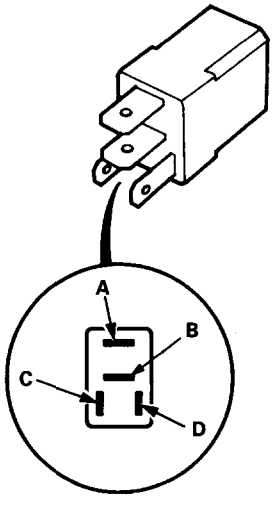

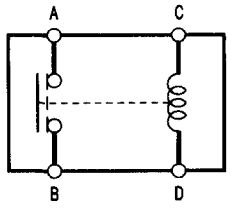

Blower Unit

Replacement

1. Remove the spare tire (refer to Owner's manual).

2. Remove the spare tire holder.
   ☆ **CORROSION RESISTANT BOLT**

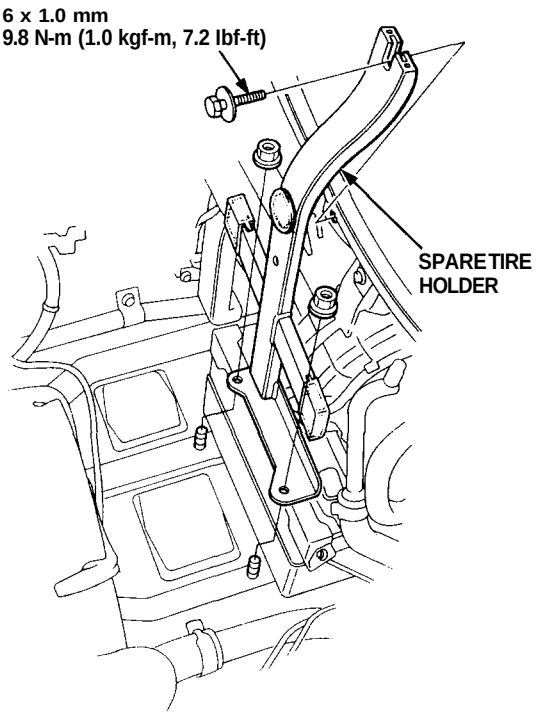

3. Disconnect the cables from the battery, loosen the hold-down bracket nuts, and remove the hold-down bracket. Then, remove the battery.

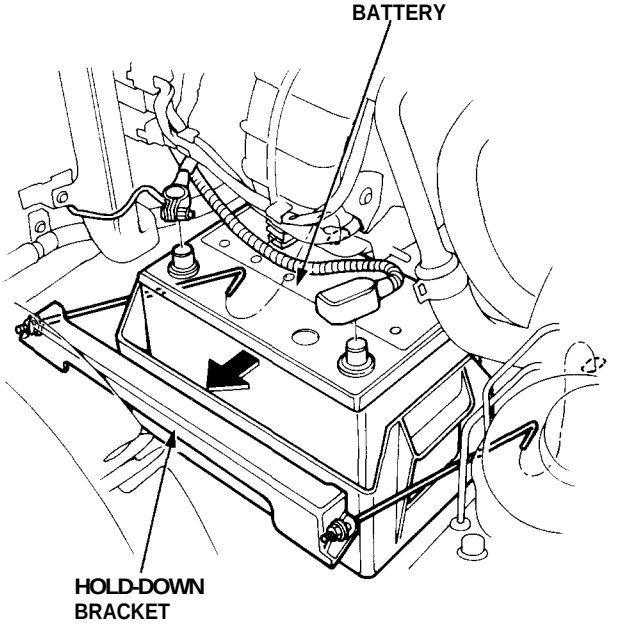

4. Remove the under-hood relay box A and the water drain duct. Disconnect the connectors from the blower motor, power transistor and recirculation control motor.
   ☆ **CORROSION RESISTANT BOLT**

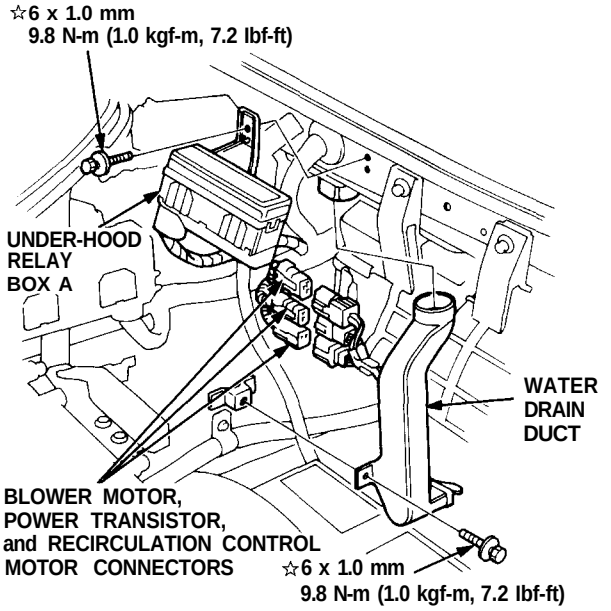

5. Remove the mounting bolts, then remove the blower unit.
   ☆ **CORROSION RESISTANT BOLT**

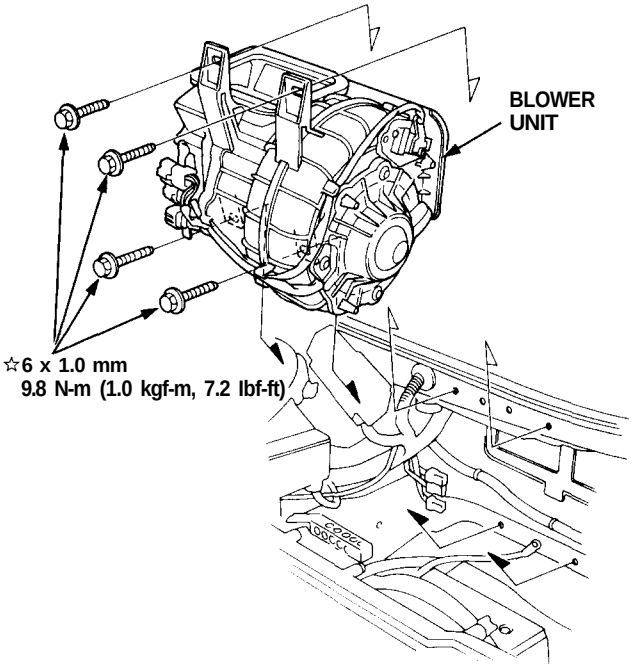

6. Install the blower unit in the reverse order of removal, then make sure it runs and doesn't leak any air.

Blower Unit

Overhaul

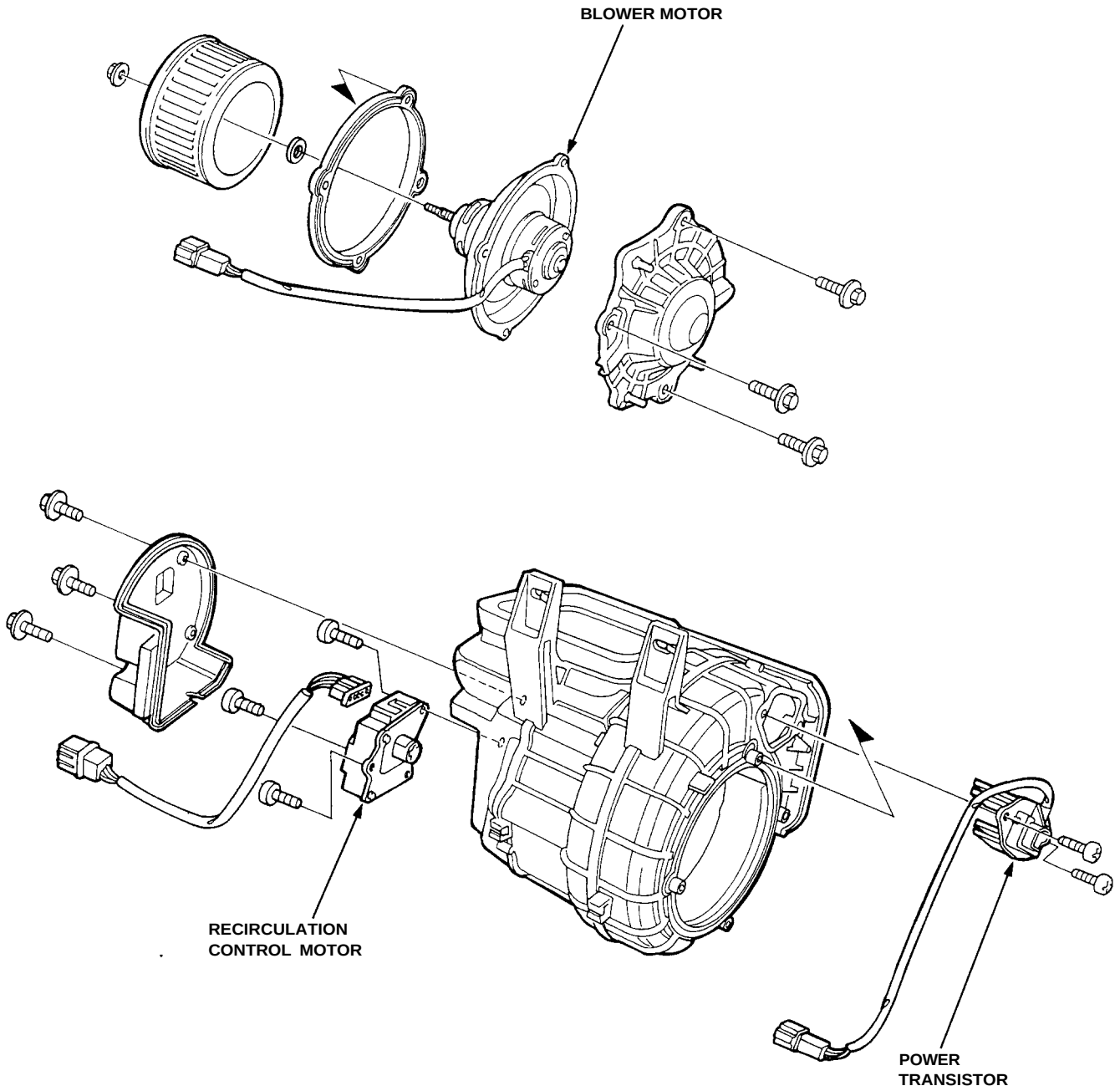

A/C Service Tips and Precautions

The air conditioning system uses HFC-134a (R-134a) refrigerant and polyalkyleneglycol (PAG) refrigerant oil*, which are not compatible with CFC-12 (R-12) refrigerant and mineral oil. Do not use R-12 refrigerant or mineral oil in this system, and do not attempt to use R-12 servicing equipment; damage to the air conditioning system or your servicing equipment will result.

*DENSO ND-OIL8:

- P/N 38899 - PR7 - A01: 40mℓ (1 1/3 fl-oz, 1.4 Imp-oz)
- P/N 38897-PR7-A01AH: 120 mℓ (4fl-oz, 4.2 Imp-oz)

Only use service equipment that is U.L.-listed and is certified to meet the requirements of SAE J2210 to remove R-134a from the air conditioner system.

CAUTION: Exposure to air conditioner refrigerant and lubricant vapor or mist can irritate eyes, nose and throat, Avoid breathing the air conditioner refrigerant and lubricant vapor or mist.

If accidental system discharge occurs, ventilate work area before resuming service.

R-134a service equipment or vehicle air conditioner systems should not be pressure tested or leak tested with compressed air.

⚠ WARNING Some mixtures of air and R-134a have been shown to be combustible elevated pressures and can result in fire or explosion causing injury or property damage. Never use compressed air to pressure test R-134a service equipment or vehicle air conditioning systems.

Additional health and safety information may be obtained from the refrigerant and lubricant manufacturers.

1. Always disconnect the negative cable from the battery whenever replacing air conditioning parts.
2. Keep moisture and dust out of the system. When disconnecting any lines, plug or cap the fittings immediately; don't remove the caps or plugs until just before you reconnect each line.
3. Before connecting any hose or line, apply a few drops of refrigerant oil to the O-ring.
4. When tightening or loosening a fitting, use a second wrench to support the matching fitting.
5. When recovering the system, use a R-134a refrigerant Recovery/Recycling/Charging System; don't release refrigerant into the atmosphere.
6. Add refrigerant oil after replacing the following parts:

   NOTE:

   - Do not return the oil to the container once dispensed and never mix with other refrigerant oils to avoid contamination.
   - Immediately after using the oil, replace the cap on the container and seal it to avoid moisture absorption.
   - Do not spill the refrigerant oil on the vehicle; it may damage the paint; if the refrigerant oil contacts the paint, wash it off immediately.

   Condenser ..... 10mℓ (1/3 fl-oz, 0.4 Imp-oz)
   Evaporator ..... 10 mℓ (1/3 fl-oz, 0.4 Imp-oz)
   Line or hose ..... 20 mℓ (2/3 fl-oz, 0.7 Imp-oz)
   Receiver ..... 10 mℓ (1/3 fl-oz, 0.4 Imp-oz)
   Compressor ..... On compressor replacement, subtract the volume of oil drained from the removed compressor from 160 mℓ (5 1/3 fl-oz, 5.6 Imp-oz), and drain the calculated volume of oil from the new compressor: 160 mℓ (5 1/3 fl-oz, 5.6 Imp-oz) — Volume of oil from removed compressor = Volume to drain from new compressor.

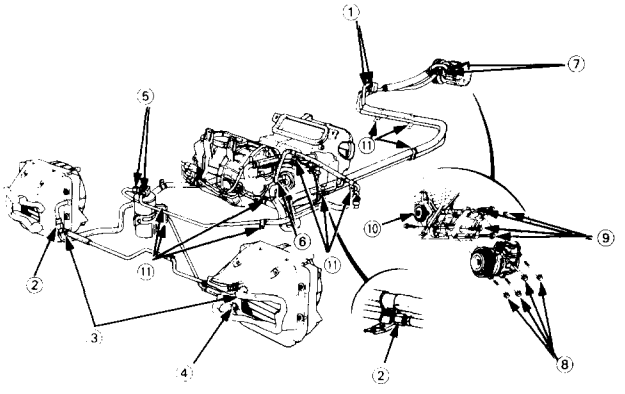

☆ CORROSION RESISTANT BOLT

① Suction hose and discharge hose to A/C lines ..... 22 N-m (2.2 kgf-m, 16 lbf-ft)
② Discharge line C (both sides) ..... 23 N-m (2.3 kgf-m, 17 lbf-ft)
③ Condenser line A (both sides) ..... 23 N-m (2.3 kgf-m, 17 lbf-ft)
④ Condenser line C to left side condenser ..... 14 N-m (1.4 kgf-m, 10 lbf-ft)
⑤ Receiver/dryer ..... 14 N-m (1.4 kgf-m, 10 lbf-ft)
⑥ Receiver line and suction line to heater assembly ..... 22 N-m (2.2 kgf-m, 16 lbf-ft)
⑦ Compressor hose mounting bolts ..... 22 N-m (2.2 kgf-m, 16 lbf-ft)
⑧ Compressor mounting bolts ..... 22 N-m (2.2 kgf-m, 16 lbf-ft)
⑨ Compressor bracket mounting bolts ..... 44 N-m (4.5 kgf-m, 33 lbf-ft)
⑩ Idler pulley center nut ..... 44 N-m (4.5 kgf-m, 33 lbf-ft)
⑪ ☆ 6 mm bolt ..... 9.8 N-m (1.0 kgf-m, 7.2 lbf-ft)

A/C System Service

Performance Test

The performance test will help determine if the air conditioning system is operating within specifications.

Only use service equipment that is U.L.-listed and is certified to meet the requirements of SAE J2210 to remove HFC-134a (R-134a) from the air conditioning system.

CAUTION: Exposure to air conditioner refrigerant and lubricant vapor or mist can irritate eyes, nose and throat. Avoid breathing the air conditioner refrigerant and lubricant vapor or mist.

If accidental system discharge occurs, ventilate work area before resuming service.

R-134a service equipment or vehicle air conditioning system should not be pressure tested or leak tested with compressed air.

⚠ WARNING Some mixtures of air and R-134a have been shown to be combustible at elevated pressures and can result in fire or explosion causing injury or property damage. Never use compressed air to pressure test R-134a service equipment or vehicle air conditioning systems.

Additional health and safety information may be obtained from the refrigerant and lubricant manufacturers.

1. Connect a R-134a refrigerant Recovery/Recycling/Charging System to the vehicle as shown following the equipment manufacturer's instructions.

2. Insert a thermometer in the center vent outlet. Determine the relative humidity and air temperature by calling the local weather information line.

3. Test conditions:
   - Avoid direct sunlight.
   - Open engine cover.
   - Open the doors.
   - Set the temperature control dial to MAX COOL and push the mode control button to VENT and FRESH button.
   - Turn the fan switch to MAX.
   - Run the engine at 1,500 RPM.
   - No driver or passengers in vehicle.

4. After running the air conditioning for 10 minutes under the above test conditions, read the delivery temperature from the thermometer in the dash vent and the high and low system pressure from the A/C gauges.

Recovery/Recycling/Charging System

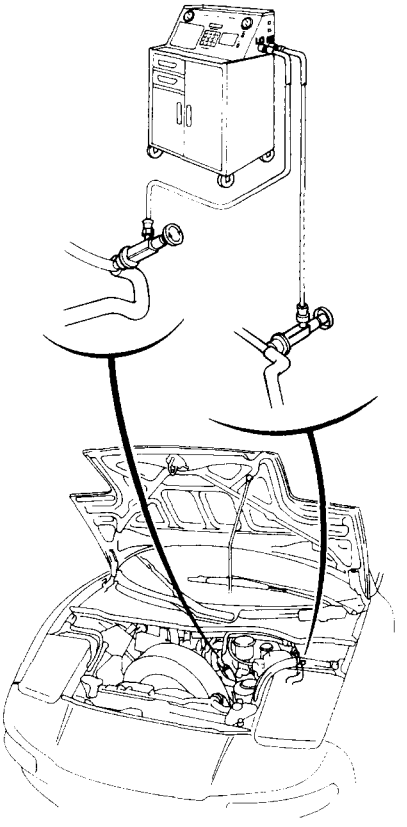

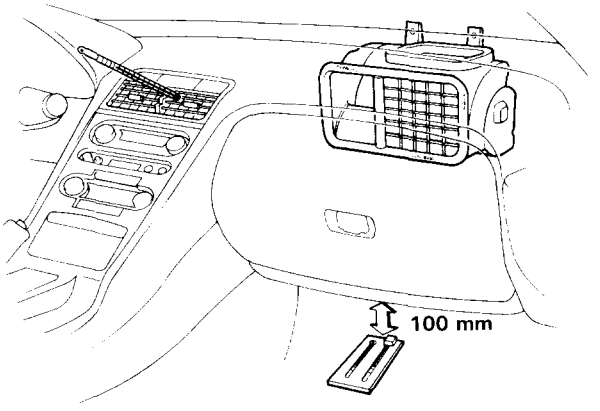

5. To complete the charts:
   - Mark the delivery temperature along the vertical line.
   - Mark the intake temperature (air temperature) along the bottom line.
   - Draw a line straight up from the air temperature to the humidity.
   - Mark a point one line above and one line below the humidity level. (10% above and 10% below the humidity level)
   - From each point, draw a horizontal line across to the delivery temperature.
   - The delivery temperature should fall between the two lines.
   - Complete the low side pressure test and high side pressure test in the same way.

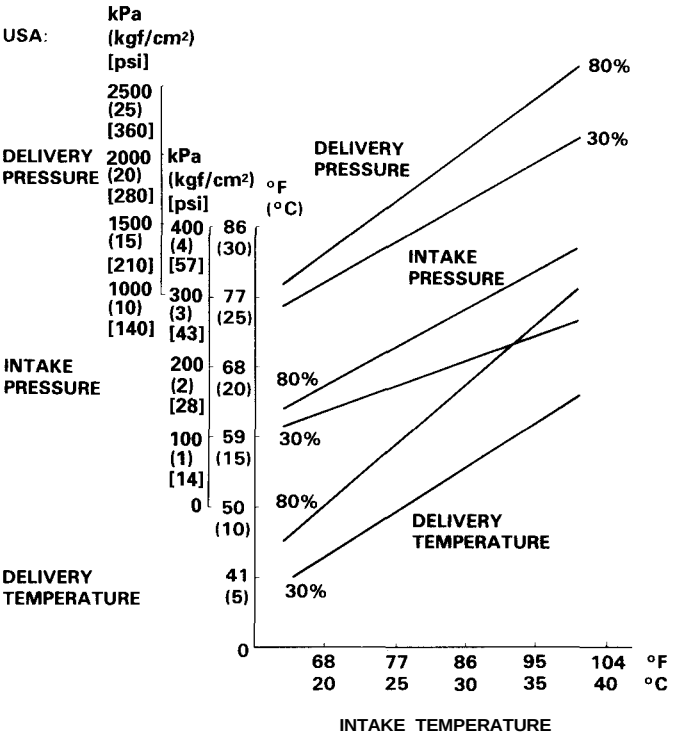

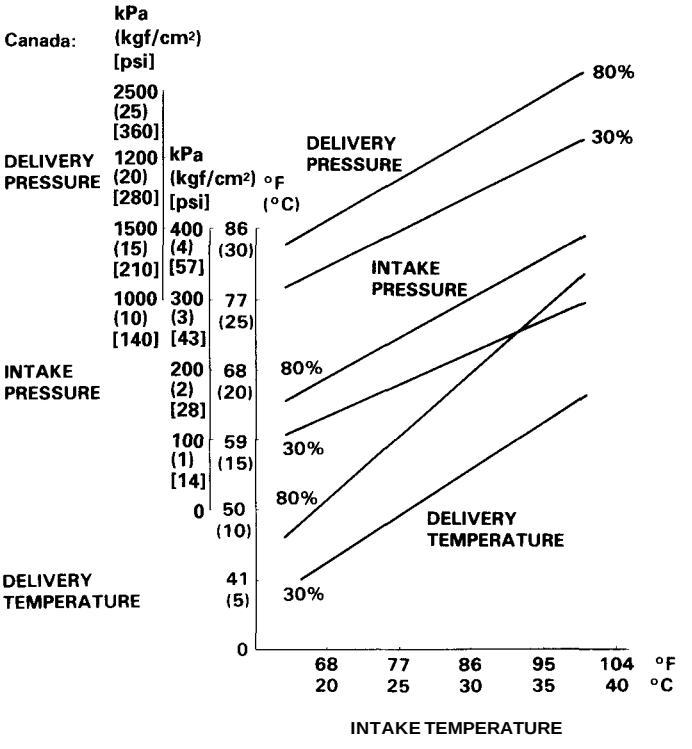

Pressure Test Chart

NOTE: Performance Test on page 22-70.

TEST RESULTS	RELATED SYMPTOMS	PROBABLE CAUSE	REMEDY
Discharge (high) pressure abnormally high	After stopping compressor, pressure drops to about 200 kPa (2.0 kgf/cm², 28 psi) quickly, and then falls gradually.	Air in system	Recover, evacuate and recharge with specified amount. Evacuation: see page 22-89 Charging: see page 22-91
	No bubbles in sight glass when condenser is cooled by water.	Excessive refrigerant in system	Recover, evacuate and recharge with specified amount.
	Reduced or no air flow through condenser.	• Clogged condenser fins • Condenser fan not working properly	• Clean • Check voltage and fan rpm • Check fan direction
	Line to condenser is excessively hot.	Restricted flow of refrigerant in system	Restricted lines
Discharge pressure abnormally low	Excessive bubbles in sight glass; condenser is not hot.	Insufficient refrigerant in system	• Check for leak • Charge system
	High and low pressures are balanced soon after stopping compressor. Low side is higher than normal.	• Faulty compressor discharge valve • Faulty compressor seal	Replace compressor
	Outlet of expansion valve is not frosted, low pressure gauge indicates vacuum.	• Faulty expansion valve • Moisture in system	• Replace • Recover, evacuate and recharge with specified amount.
Suction (low) pressure abnormally low	Excessive bubbles in sight glass; condenser is not hot.	Insufficient refrigerant	Repair the leaks. Recover, evacuate and recharge with specified amount. Charge as required.
	Expansion valve is not frosted and low pressure line is not cold. Low pressure gauge indicates vacuum.	• Frozen expansion valve • Faulty expansion valve	Replace expansion valve
	Discharge temperature is low and the air flow from vents is restricted.	Frozen evaporator	Run the fan with compressor off then check evaporator temperature sensor
	Expansion valve is frosted.	Clogged expansion valve	Clean or replace
	Receiver/dryer outlet is cool and inlet is warm (should be warm during operation).	Clogged receiver dryer	Replace
Suction pressure abnormally high	Low pressure hose and check joint are cooler than the temperature around evaporator.	• Expansion valve open too long • Loose expansion capillary tube	Repair or replace.
	Suction pressure is lowered when condenser is cooled by water.	Excessive refrigerant in system	Recover, evacuate and recharge with specified amount.
	High and low pressure are equalized as soon as the compressor is stopped and both gauges fluctuate while running.	• Faulty gasket • Faulty high pressure valve • Foreign particle stuck in high pressure valve	Replace the compressor
Suction and discharge pressures abnormally high	Reduced air flow through condenser.	• Clogged condenser fins • Condenser fan not working properly	• Clean condenser • Check voltage and fan rpm • Check fan direction
	No bubbles in sight glass when-condenser is cooled by water.	Excessive refrigerant in system	Recover, evacuate and recharge with specified amount.
Suction and discharge pressures abnormally low	Low pressure hose and metal end areas are cooler than evaporator.	Clogged or kinked low pressure hose parts	Repair or replace
	Temperature around expansion valve is too low compared with that around receiver/dryer.	Clogged high pressure line	Repair or replace
Refrigerant leaks	Compressor clutch is dirty.	Compressor shaft seal leaking	Replace the compressor
	Compressor bolt(s) are dirty.	Leaking around bolt(s)	Tighten bolt(s) or replace compressor
	Compressor gasket is wet with oil.	Gasket leaking	Replace the compressor

Recovery

Only use service equipment that is U.L.-listed and is certified to meet the requirements of SAE J2210 to remove HFC-134a (R-134a) from the air conditioning system.

CAUTION: Exposure to air conditioner refrigerant and lubricant vapor or mist can irritate eyes, nose and throat. Avoid breathing the air conditioner refrigerant and lubricant vapor or mist.

If accidental system discharge occurs, ventilate work area before resuming service.

R-134a service equipment or vehicle air conditioning system should not be pressure tested or leak tested with compressed air.

⚠ WARNING Some mixtures of air and R-134a have been shown to be combustible at elevated pressures and can result in fire or explosion causing injury or property damage. Never use compressed air to pressure test R-134a service equipment or vehicle air conditioning systems.

Additional health and safety information may be obtained from the refrigerant and lubricant manufactures.

1. Connect a R-134a refrigerant Recovery/Recycling/Charging System to the vehicle as shown following the equipment manufacturer's instructions.

2. Measure the amount of refrigerant oil removed from the A/C system after the recovery process is completed.

   NOTE: Be sure to install the same amount of new refrigerant oil back into the A/C system before charging.

Recovery/Recycling/Charging System.

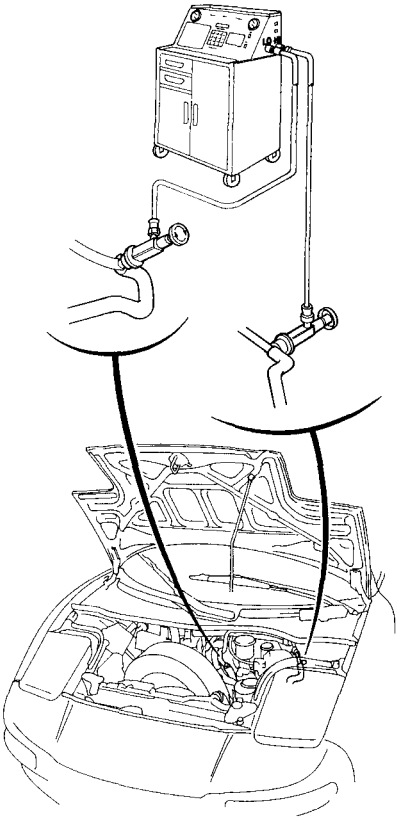

Heater-Evaporator Unit

Replacement

SRS components are located in this area. Review the SRS component locations, precautions, and procedures in the SRS section 24 before performing repairs or service.

1. Remove the blower unit (see page 22-67).

2. When the engine is cool, drain the engine coolant from the radiator (see section 10).

   ⚠ WARNING Do not remove the radiator cap when the engine is hot; the engine coolant is under pressure and could severely scald you.

   CAUTION: Engine coolant will damage paint. Quickly rinse any spilled engine coolant off painted surfaces.

3. Disconnect the heater valve cable from the heater valve.

4. Disconnect the heater hoses. Engine coolant will run out when the hoses are disconnected, drain it into a clean drip pan.

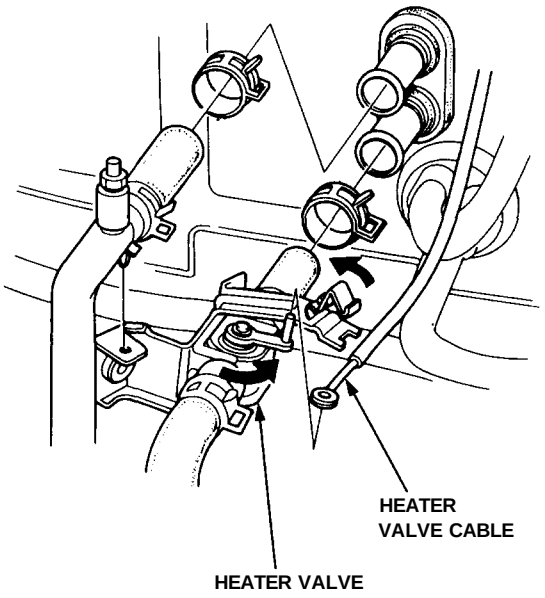

5. Recover the refrigerant from the A/C system with a R-134a refrigerant Recovery/Recycling/Charging System. (see page 22-73).

6. Disconnect the receiver line and the suction line from the evaporator. Cap the open fittings immediately to keep moisture out of the system.

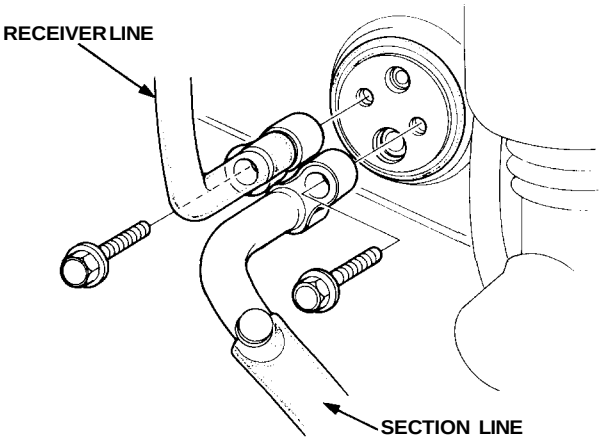

7. Remove the dashboard (see section 20).

8. Remove the heater duct.

9. Remove the four mounting bolts, disconnect the connectors from the control units and the evaporator temperature sensor connector from the control unit bracket, then remove the control unit bracket.

   ☆: CORROSION RESISTANT

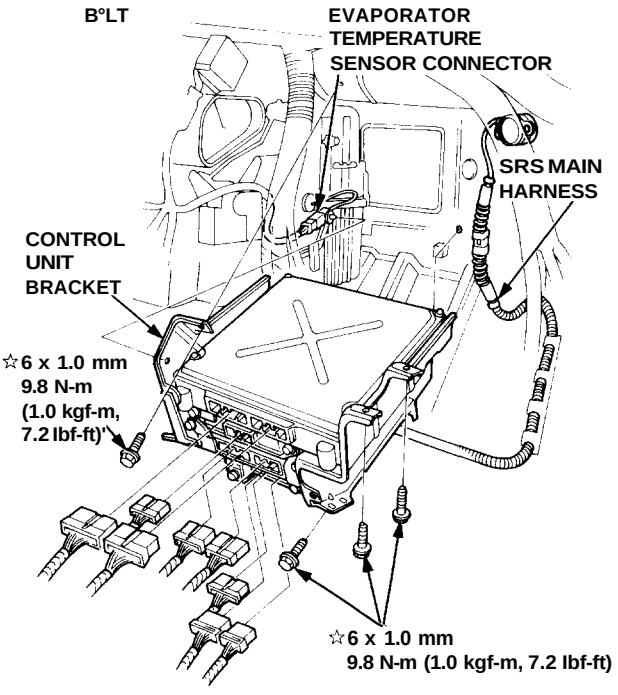

10. Remove the woofer enclosure (see section 23).

11. Disconnect the connectors from all the control motors and sensors attached to the heater-evaporator unit.

12. Remove the two mounting bolts and two nuts, then remove the heater-evaporator unit through the passenger door.

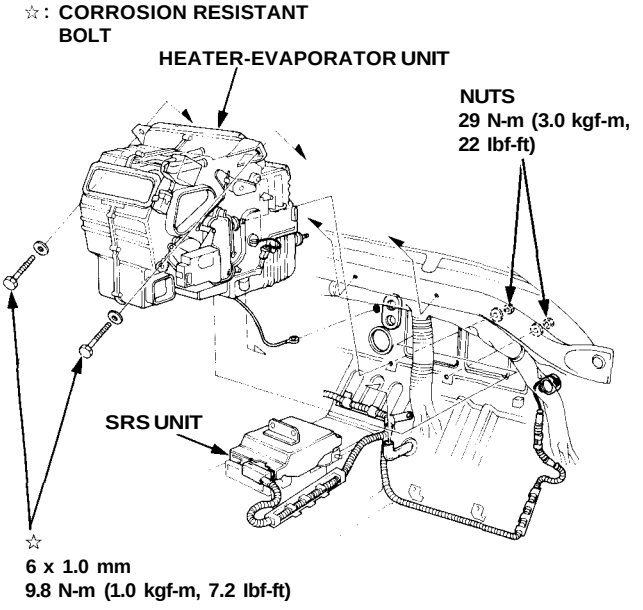

13. Install the heater-evaporator unit in the reverse order of removal, and:
    - If you're installing a new evaporator, add refrigerant oil (ND-OIL 8) see page 22-69).
    - Replace O-rings with new ones at each fitting, and apply refrigerant oil to them.

    NOTE: Be sure to use the right O-rings for R-134a to avoid leakage.

14. Fill the radiator and reservoir tank with the proper engine coolant mixture. Bleed the air from the cooling system (see section 10).

    CAUTION: Follow the sequence described in the air bleed procedure. If you don't, you may leave air in the system which could damage the engine.

15. If necessary, adjust the heater valve cable:
    - Set the air mix control motor at COOL position (see page 22-57).
    - Connect the end of the heater valve cable to the heater valve arm.
    - Gently slide the cable outer housing back from the end enough to take up any slack in the cable, but not enough to make the other end move the arm on the air mix control motor. Then snap the clamp down over the cable housing.

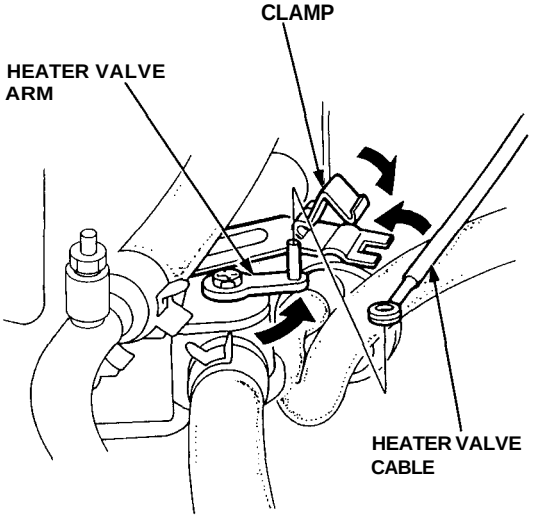

16. Turn the blower on, and make sure that there is no air leakage.

17. Charge the system (see page 22-91), and test performance (see page 22-70).

Heater-Evaporator Unit

Overhaul

1. Remove the heater core cover, remove the pipe clamp, then pull out the heater core.
2. Remove the lower half of the housing, then remove the evaporator.
3. Remove the expansion valve if necessary.

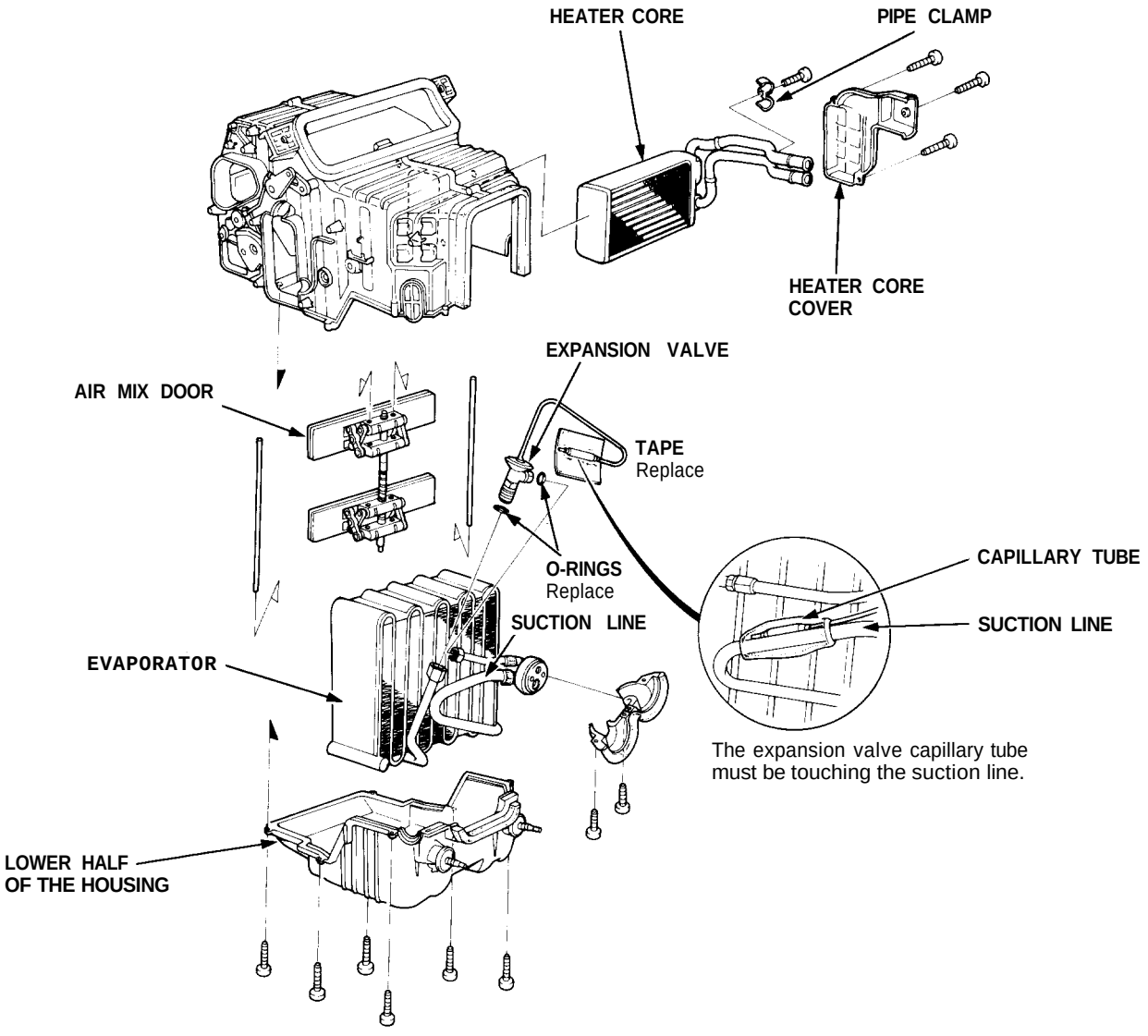

4. Assemble the heater-evaporator unit in the reverse order of disassembly. Hold the expansion valve capillary tube down against the suction line, and wrap it with tape to hold it there.

"DEF" Door Adjustment

Connect the control rod to the clip.

Turn this lever all the way clockwise and hold it there.

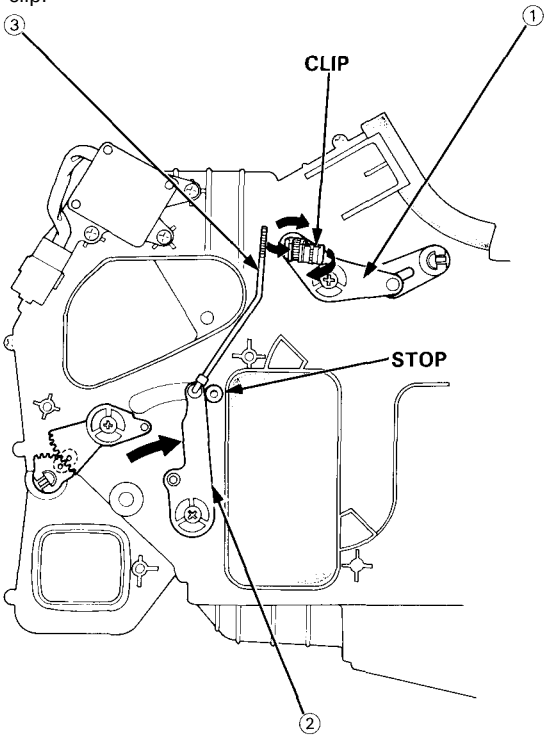

Turn this lever clockwise and hold it against its stop.

"HEAT" Door Adjustment

Reposition gear 2 so this mark lines up with the mark on gear 1.

Loosen this screw in gear 2.

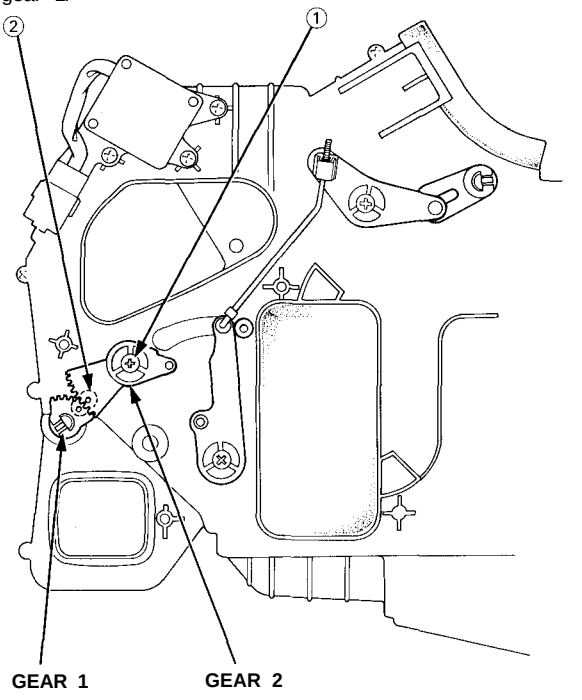

Condenser

Description

Dual condensers are mounted behind the right and left side of the front bumper as shown. The cooling efficiency of parallel-dual condensers is as good as or better than a single condenser mounted in front of radiator.

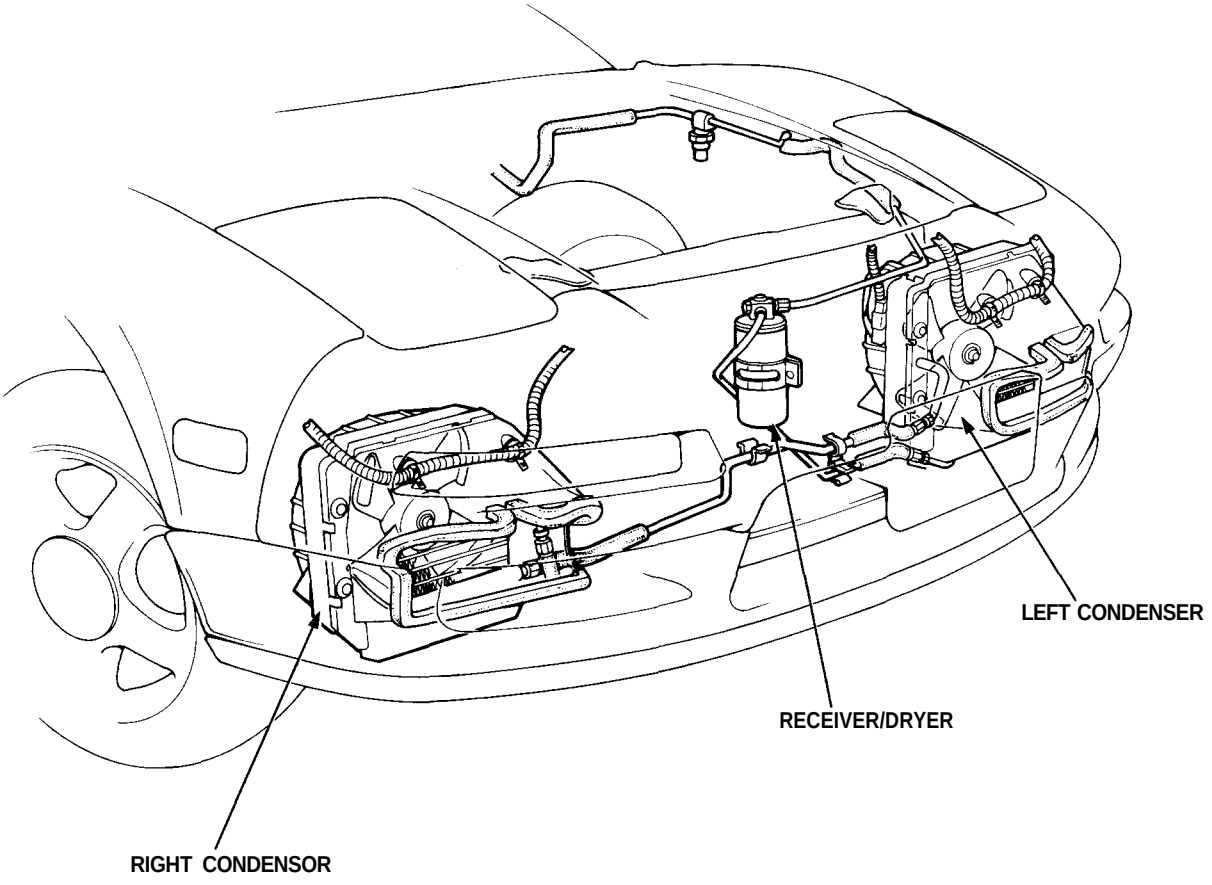

Replacement

1. Disconnect the negative cable from the battery.
2. Remove the front bumper (see section 20).
3. Recover the refrigerant using a R-134a refrigerant Recover/Recycling/Charging System (see page 22-73).
4. Disconnect the discharge line C and the condenser lines from the condenser. Cap the open fittings immediately to keep moisture and dirt out of the system.

(Right Condenser)

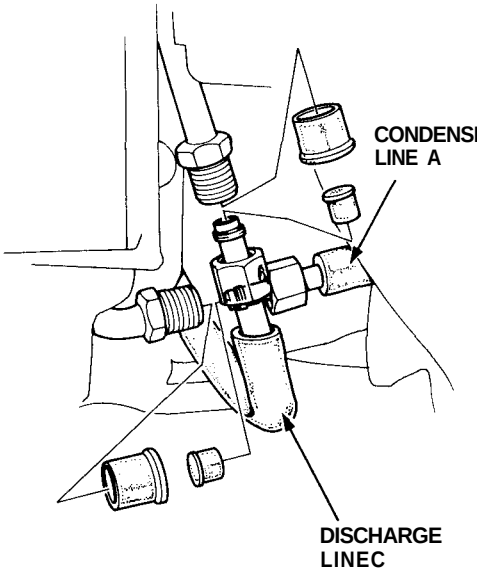

(Left Condenser)

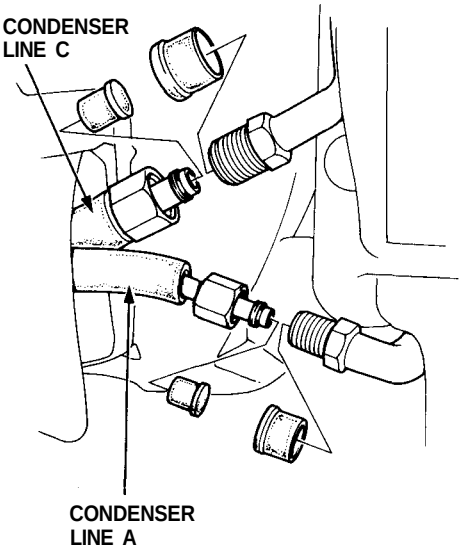

5. Disconnect the connector from the condenser fan, remove the two mounting bolts and nut, then remove the condenser.

☆: **CORROSION RESISTANT BOLT**

(Right Condenser)

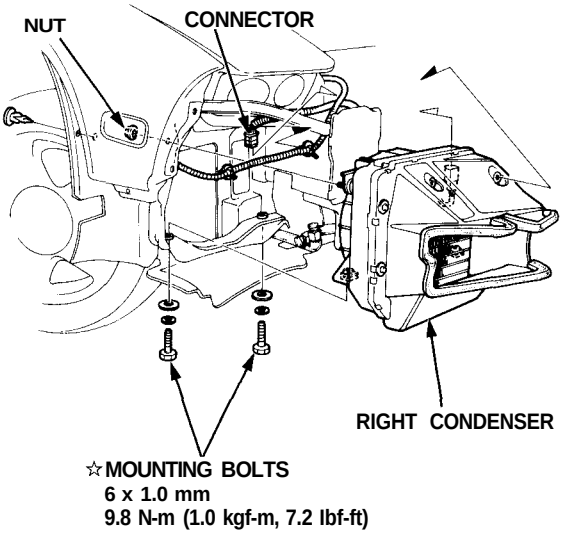

(Left Condenser)

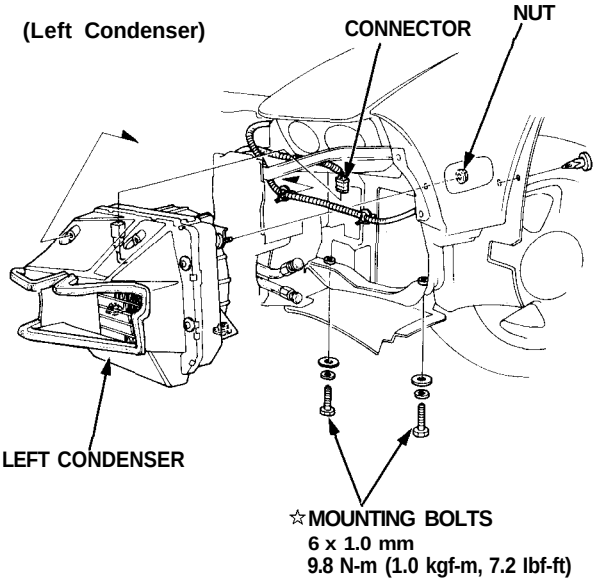

6. Install the condenser in the reverse order of removal; and:
   - If you're installing a new condenser, add refrigerant oil (ND-OIL 8) (see page 22-69).
   - Replace O-rings with new ones at each fitting, and apply refrigerant oil to them.
     NOTE: Be sure to use the right O-rings for R-134a to avoid leakage.
   - Charge the system (see page 22-91), and test its performance (see page 22-70).

Condenser

Overhaul

1. Remove the four bolts and nuts. Then separate the condenser duct from the condenser shroud, and remove the condenser.

2. Remove the three mounting screws, then remove the condenser fan from the condenser shroud.

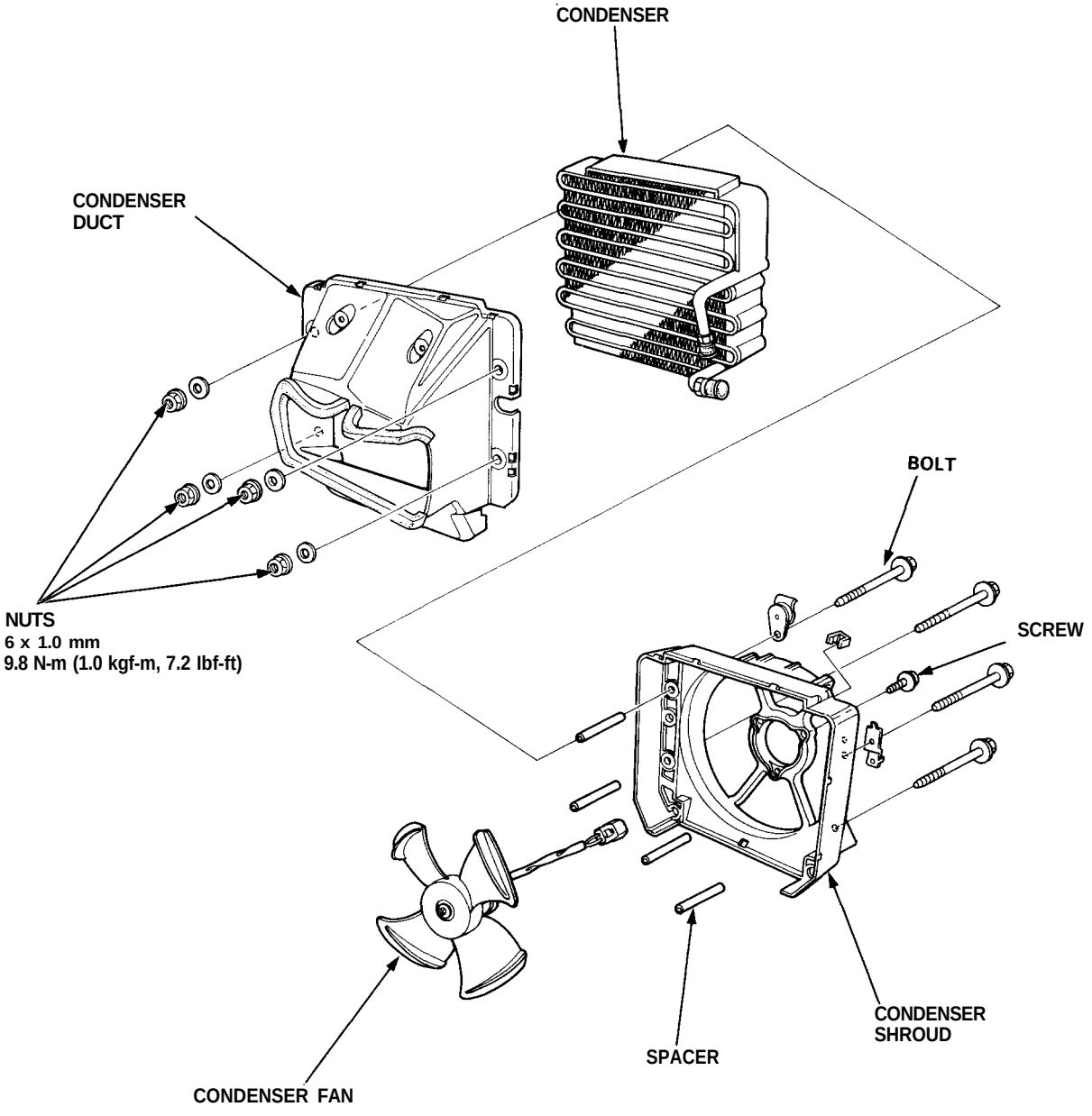

3. Assemble the condenser in the reverse order of disassembly. Be careful not to damage the tabs on the condenser shroud when you attach it to the air intake duct.

Compressor

Description

This compressor is a DENSO piston type for R-134a. A revolving inclined disc drives the surrounding 10 reciprocating pistons. As the inclined disc revolved, it pushes the pistons, protected by a ceramic shoe, thus compressing the refrigerant.

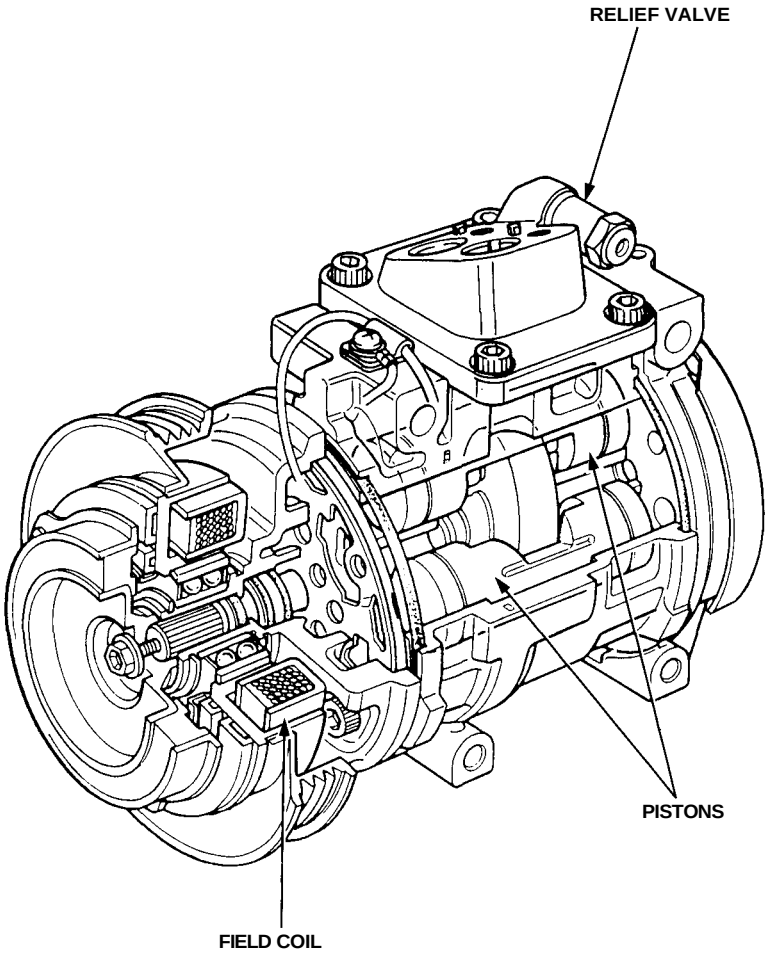

Compressor

Illustrated Index

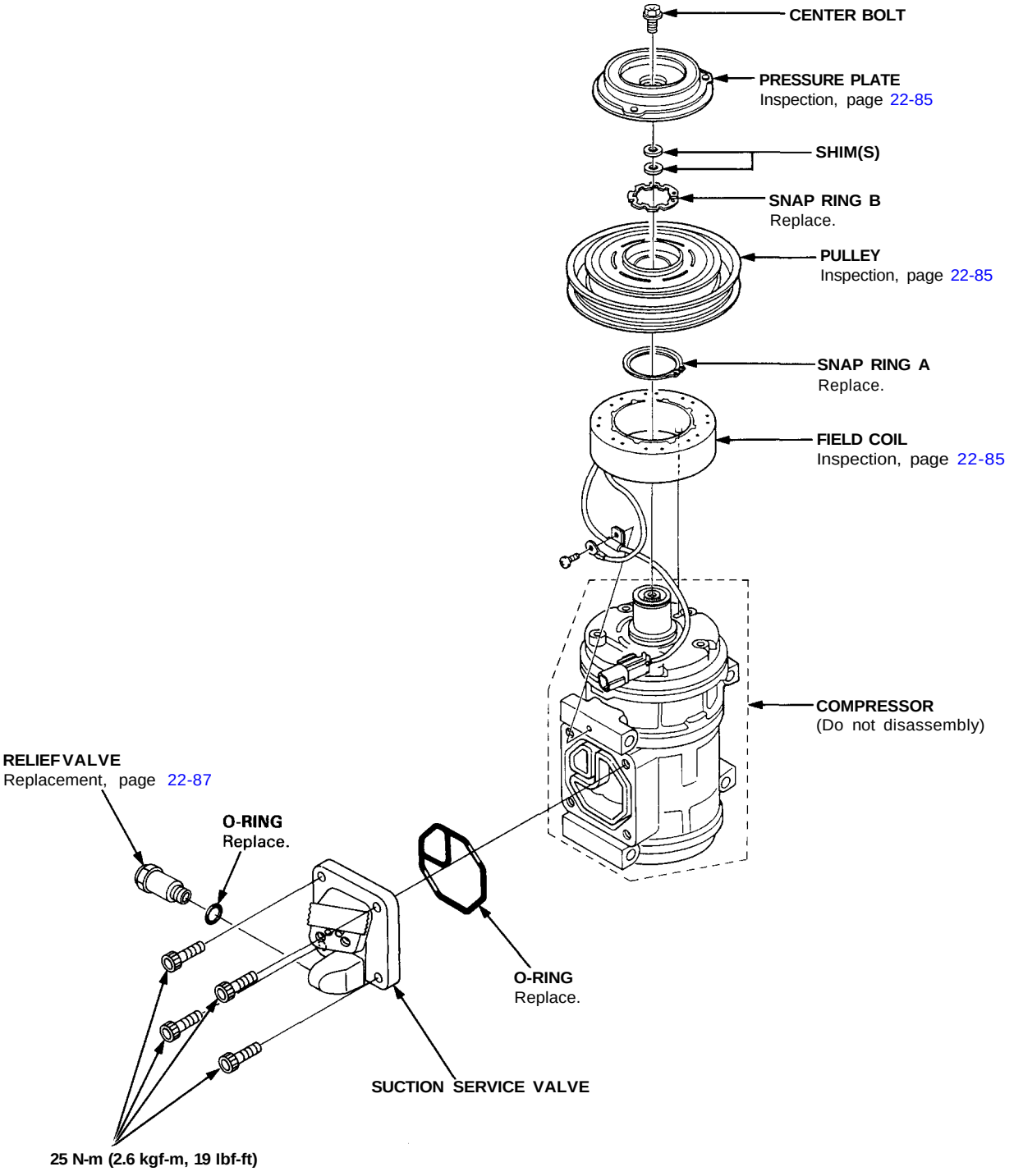

Replacement

1. If the compressor still works, run the engine at idle for a few minutes with the A/C on, then shut the engine off and disconnect the negative cable from the battery.
2. Recover the refrigerant using a R-134a refrigerant Recovery/Recycling/Charging System. (see page 22-73).
3. Disconnect the compressor connector.

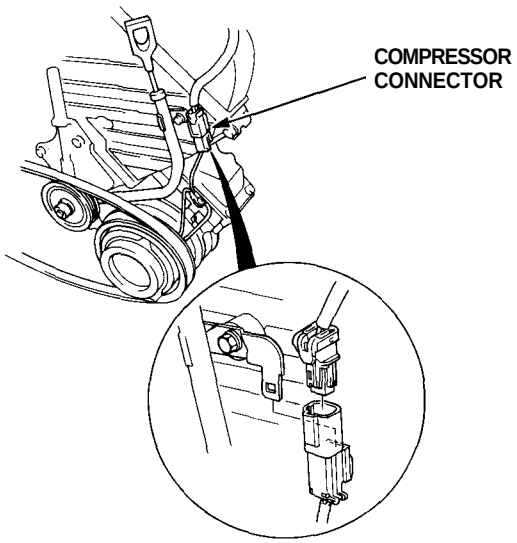

4. Raise the vehicle on a hoist. Make sure it's properly supported (see section 1).
5. Remove the front beam (see section 5).
6. Disconnect the suction and discharge hoses from the compressor. Cap the open fittings immediately to keep moisture and dirt out of the system.

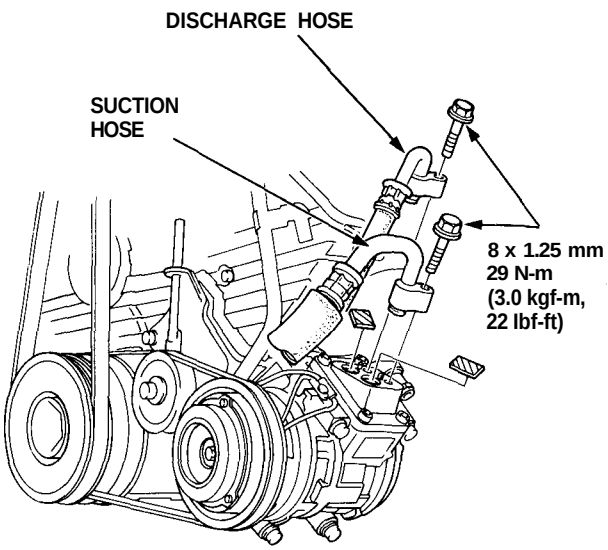

7. Loosen the idler pulley center nut and adjusting bolt, then remove the belt from compressor.

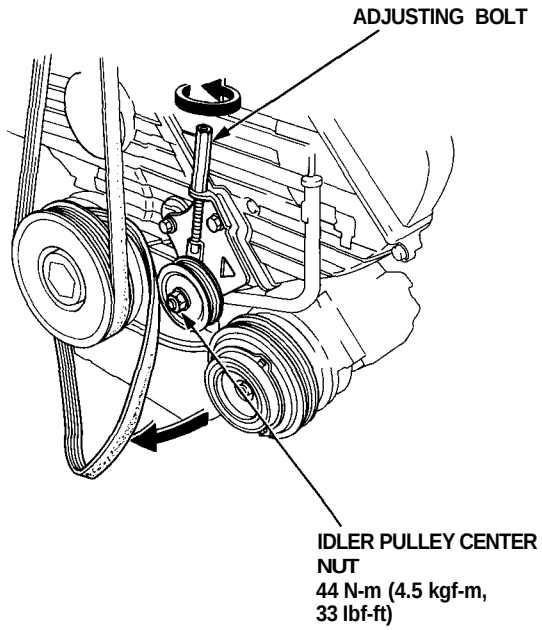

8. Remove the four mounting bolts and compressor.

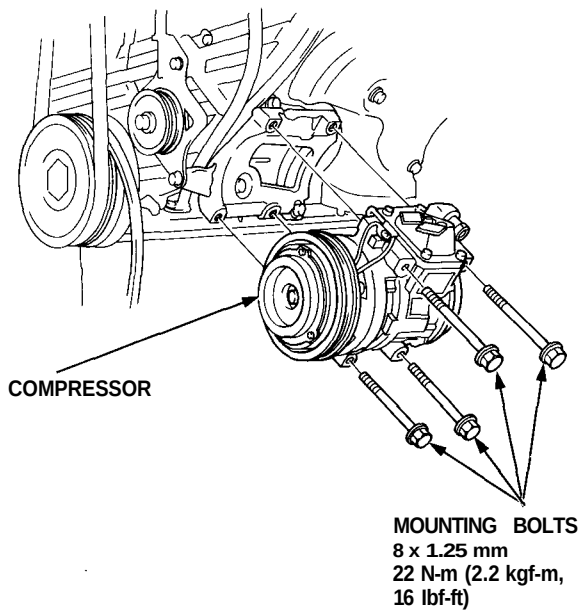

(cont'd)

Compressor

Replacement (cont'd)

9. If necessary, remove the one bolt from the idler pulley bracket, then remove the four mounting bolts and the compressor bracket.

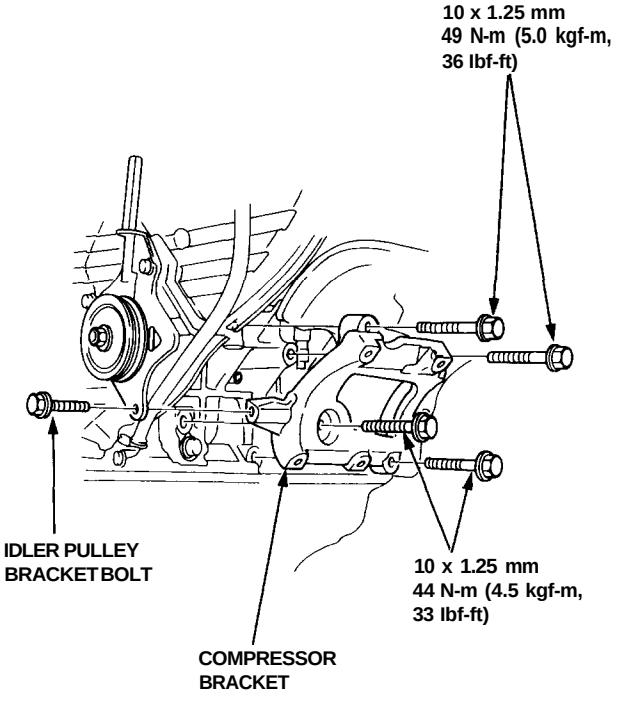

10. If necessary, remove the two other bolts in the idler pulley assembly.

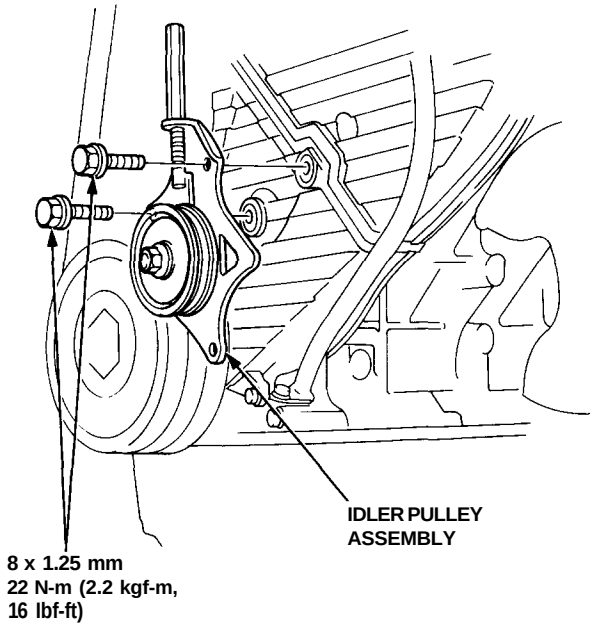

11. Check the idler pulley bearing for play and drag. Replace it with a new one if it's noisy or has excessive play or drag.

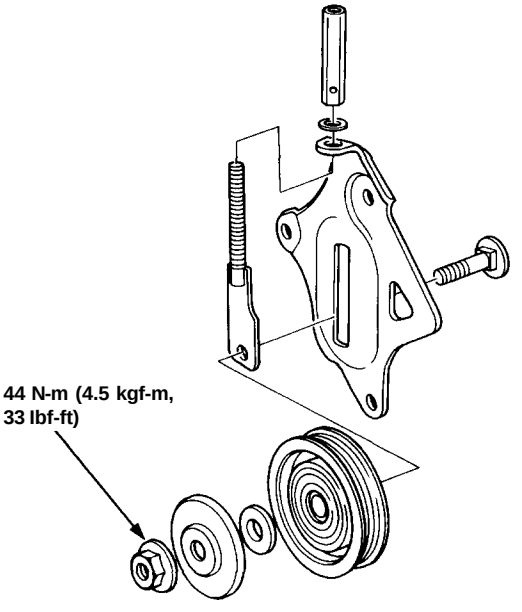

12. Install the compressor in the reverse order of removal; and:
    - If you're installing a new compressor, drain all the refrigerant oil out of the old compressor and measure its volume. Subtract the volume of old oil from 160 mℓ (5 1/3 fl-oz, 5,6 Imp-oz); the result is the amount of oil you should drain from the new compressor (through the suction fitting).
    - Replace O-rings with new ones at each fitting, and apply refrigerant oil to them.
      NOTE: Be sure to use the right O-rings for R-134a to avoid leakage.
    - Use (ND-OIL 8) oil for R-134a DENSO piston type compressors only.
    - Do not return the oil to the container once dispensed and never mix with other refrigerant oils to avoid contamination.
    - Immediately after using the oil, replace the cap on the container and seal it to avoid moisture absorption.
    - Do not spill the refrigerant oil on the vehicle; it may damage the paint; if the refrigerant oil contacts the paint, wash it off immediately.

13. Adjust the compressor belt (see page 22-88).
    After adjusting the belt, tighten the idler pulley center nut.
    Then tighten the adjusting bolt securely.

14. Charge the system (see page 22-91).

15. Test system performance (see page 22-70).

Clutch Inspection

- Check the plated parts of the pressure plate for color changes, peeling or other damage. If there is damage, replace the clutch set.
- Check the pulley bearing play and drag by rotating the pulley by hand. Replace the clutch set with a new one if it is noisy or has excessive play/drag.

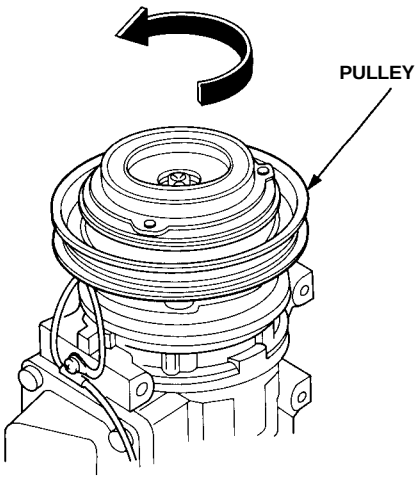

- Measure the clearance between the pulley and the pressure plate all the way around. If the clearance is not within specified limits, the pressure plate must be removed and shims added or removed as required, following the procedure on page 22-86.

  Clearance: 0.5 ± 0.15 mm (0.020 ± 0.006 in)

  NOTE: The shims are available in three thicknesses: 0.1 mm, 0.3 mm and 0.5 mm.

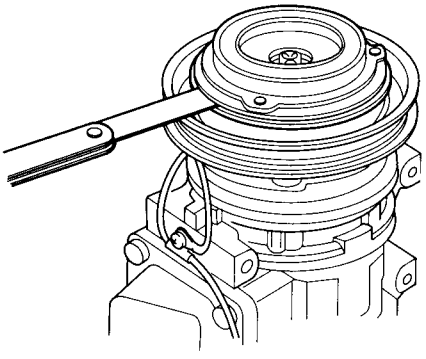

- Check resistance of the field coil.

  Field Coil Resistance: 3.6 ± 0.2 ohms at 68°F (20°C)

  If resistance is not within specifications, replace the field coil.

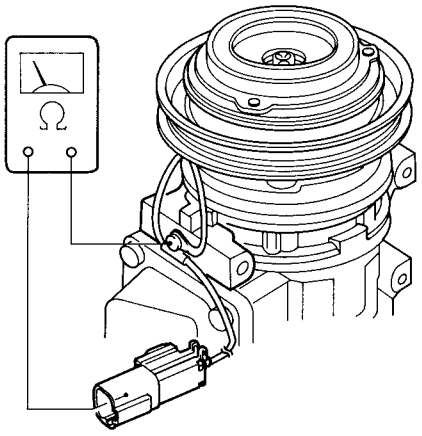

Compressor

Clutch Overhaul

1. Remove the center bolt while holding the pressure plate.

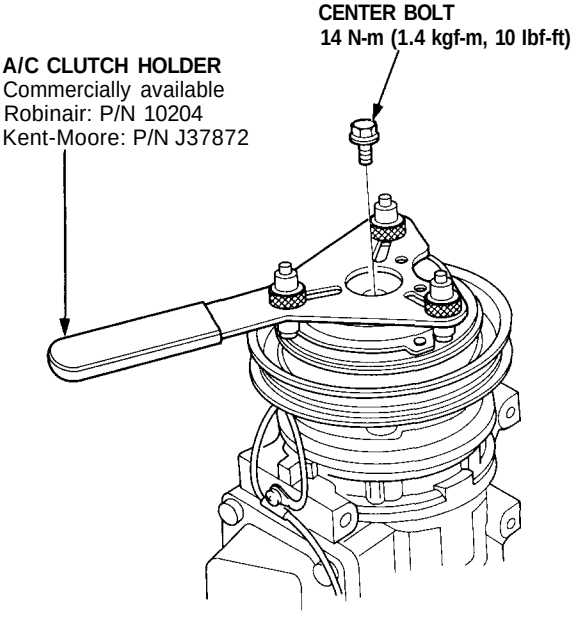

2. Remove the pressure plate and shim(s), taking care not to lose the shims.

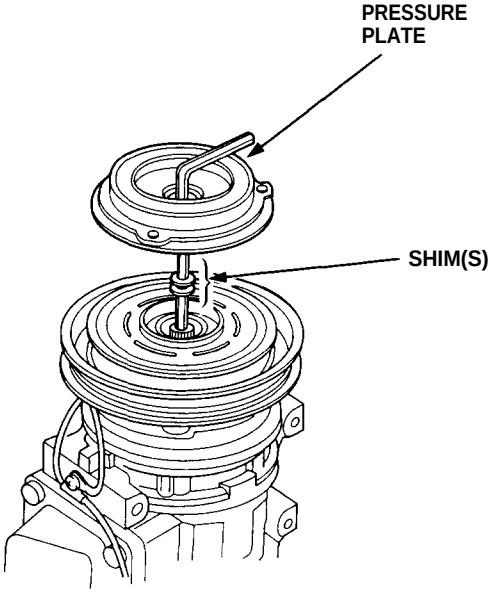

3. Use snap ring pliers to remove snap ring B, then remove the pulley.

NOTE:
- Be careful not to damage the pulley and compressor during removal/installation.
- Once the snap ring B was removed, replace it with a new one.

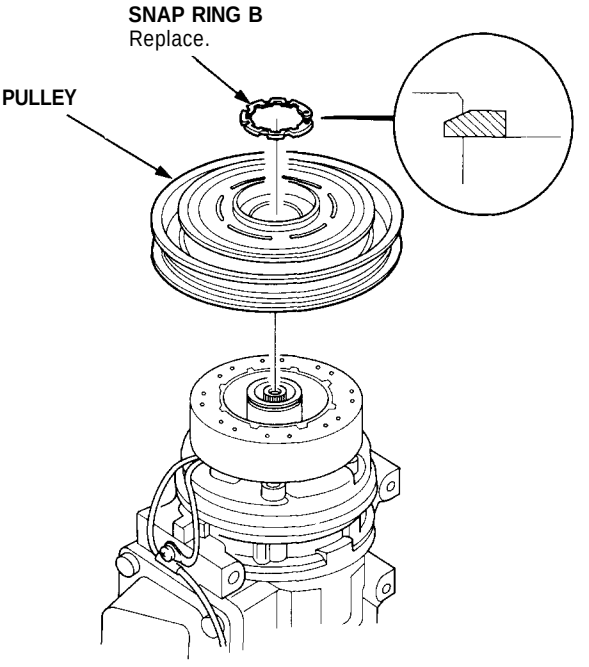

(cont'd)

4. Remove the snap ring A and the field coil.

NOTE:
- Be careful not to damage the field coil and compressor during removal/installation.
- Once the snap ring A was removed, replace it with a new one.

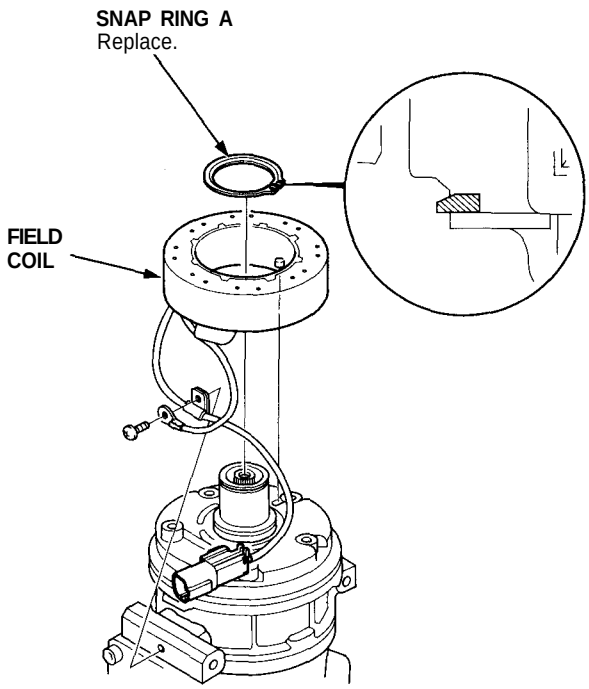

5. Install parts in the reverse order of removal, and:

- Install the field coil with the wire side facing down (see above).
- Clean the pulley and compressor sliding surfaces with non-petroleum solvent.
- Check the pulley bearings for excessive play.
- Make sure the snap rings are in the groove properly.
- Apply locking agent to the threads on the center bolt.
- Make sure that the pulley turns smoothly after it's reassembled.

Relief Valve Replacement

1. Remove the relief valve and O-ring.
   Don't let any refrigerant oil run out.

   NOTE: Be sure to use the right O-rings for R-134a.

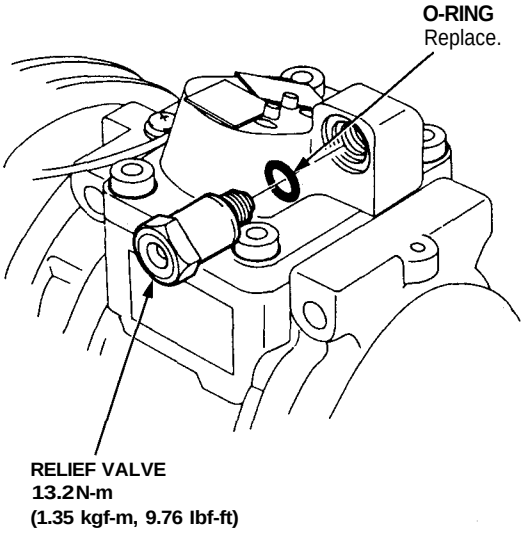

2. Clean off the mating surface.

3. Replace O-ring with new one at the relief valve, and apply refrigerant oil (ND-OIL 8) to it.

   NOTE:
   - Do not return the oil to the container once dispensed and never mix with other refrigerant oils to avoid contamination.
   - Immediately after using the oil, replace the cap on the container and seal it to avoid moisture absorption.
   - Do not spill the refrigerant oil on the vehicle; it may damage the paint; if the refrigerant oil contacts the paint, wash it off immediately.

4. Install and tighten the relief valve.

5. Charge the system and check for leaks.

Belt Adjustment

Deflection Method

1. Apply a force of 98 N (10 kgf, 22 lbf) and measure the deflection between the A/C compressor and the crankshaft pulley.

   A/C Compressor Belt
   Used Belt: 10-12 mm (0.39-0.47 in)
   New Belt: 5.5-7.5 mm (0.22-0.30 in)

   NOTE:
   - If there are cracks or any damage evident on the belt, replace it with a new one.
   - "Used belt" means a belt which has been used for five minutes or more.
   - "New belt" means a belt which has been used for less than five minutes.

2. Loosen the adjusting pulley nut and the adjusting bolt.

3. Turn the adjusting bolt to get proper belt tension, then retighten the adjusting pulley nut.

4. Recheck the deflection of the A/C compressor belt.

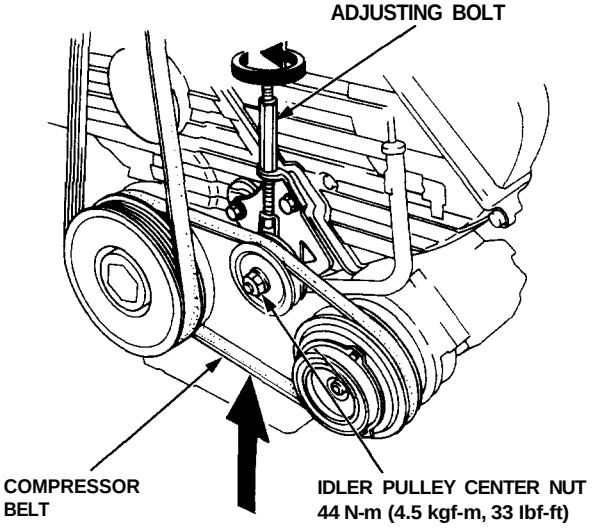

Tension Gauge Method

1. Attach the belt tension gauge to the A/C compressor belt as shown below, and measure the tension of the belt.

   A/C Compressor Belt
   Used Belt: 340 - 540 N (35 - 55 kgf, 77 - 120 lbf)
   New Belt: 690 - 880 N (70 - 90 kgf, 150 - 200 lbf)

   NOTE:
   - If there are cracks or any damage evident on the belt, replace it with a new one.
   - Follow the manufacturer's instructions for the belt tension gauge.
   - "Used belt" means a belt which has been used for five minutes or more.
   - "New belt" means a belt which has been used for less than five minutes.

2. Loosen the adjusting pulley nut and the adjusting bolt.

3. Turn the adjusting bolt to get proper belt tension, then retighten the adjusting pulley nut.

4. Recheck the tension of the A/C compressor belt.

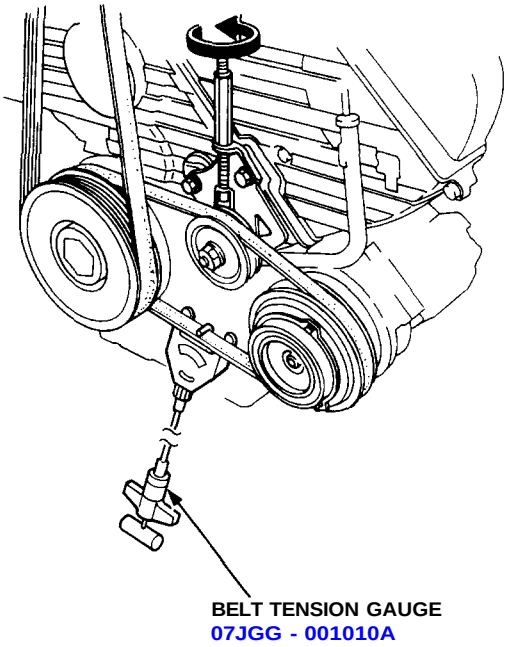

Evacuation

Only use service equipment that is U.L.-listed and is certified to meet the requirements of SAE J2210 to remove HFC-134a (R-134a) from the air conditioning system.

CAUTION: Exposure to air conditioner refrigerant and lubricant vapor or mist can irritate eyes, nose and throat. Avoid breathing the air conditioner refrigerant and lubricant vapor or mist.

If accidental system discharge occurs, ventilate work area before resuming service.

R-134a service equipment or vehicle air conditioning system should not be pressure tested or leak tested with compressed air.

⚠ WARNING Some mixtures of air and R-134a have been shown to be combustible at elevated pressures and can result in fire or explosion causing injury or property damage. Never use compressed air to pressure test R-134a service equipment or vehicle air conditioning systems.

Additional health and safety information may be obtained from the refrigerant and lubricant manufacturers.

1. When an A/C System has been opened to the atmosphere, such as during installation or repair, it must be evacuated using a R-134a refrigerant Recovery/Recycling/Charging System. (If the system has been open for several days, the receiver/dryer should be replaced).

2. Connect a R-134a refrigerant Recovery/Recycling/Charging System to the vehicle as shown follow the equipment manufacturer's instructions.

   NOTE: If low pressure does not reach more than 93.3 kPa (700 mmHg, 27.6 in.Hg) in 15 minutes, there is probably a leak in the system. Partially charge the system and check for leaks (see Leak Test).

Recovery/Recycling/Charging System

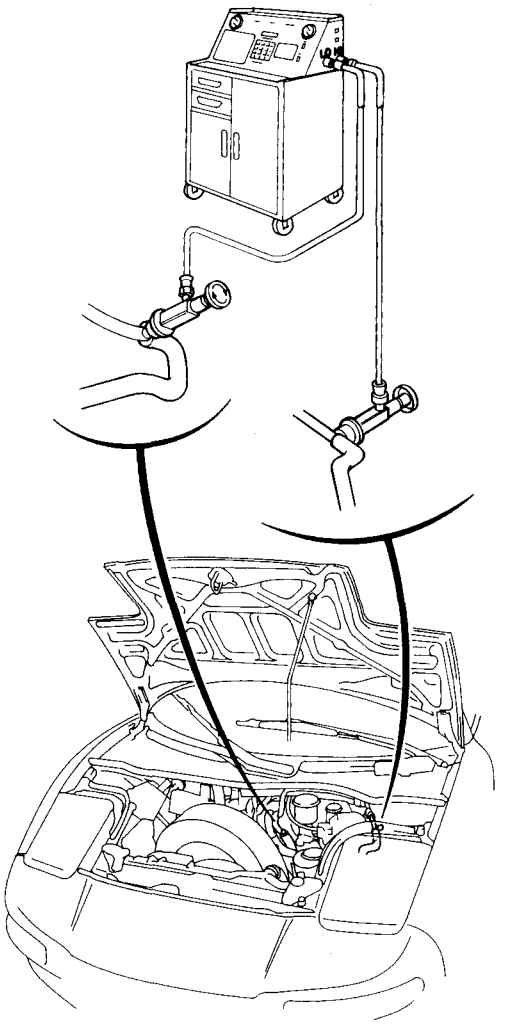

A/C System Service

Leak Test

Only use service equipment that is U.L.-listed and is certified to meet the requirements of SAE J2210 to remove HFC-134a (R-134a) from the air conditioning system.

CAUTION: Exposure to air conditioner refrigerant and lubricant vapor or mist can irritate eyes, nose and throat. Avoid breathing the air conditioner refrigerant and lubricant vapor or mist.

If accidental system discharge occurs, ventilate work area before resuming service.

R-134a service equipment or vehicle air conditioning system should not be pressure tested or leak tested with compressed air.

⚠ WARNING Some mixtures of air and R-134a have been shown to be combustible at elevated pressures and can result in fire or explosion causing injury or property damage. Never use compressed air to pressure test R-134a service equipment or vehicle air conditioner systems.

Additional health and safety information may be obtained from the refrigerant and lubricant manufacturers.

1. Connect a R-134a refrigerant Recovery/Recycling/Charging System to the vehicle as shown following the equipment manufacturer's instructions.

   NOTE: Be sure to install the same amount of new refrigerant oil back into the A/C system before charging.

2. Open high pressure valve to charge the system to about 98 kPa (1.0 kgf/cm$_2$, 14 psi), then close the supply valve.

3. Check the system for leaks using a R-134a refrigerant leak detector with an accuracy of 14 g (0,5 oz) per year or better.

4. If you find leaks that require the system to be opened (to repair or replace houses, fittings, etc.), recover the system according to the Recover Procedure on page 22-73).

5. After checking and repairing leaks, the system must be evacuated (see System Evacuation on page 22-89).

Recovery/Recycling/Charging System

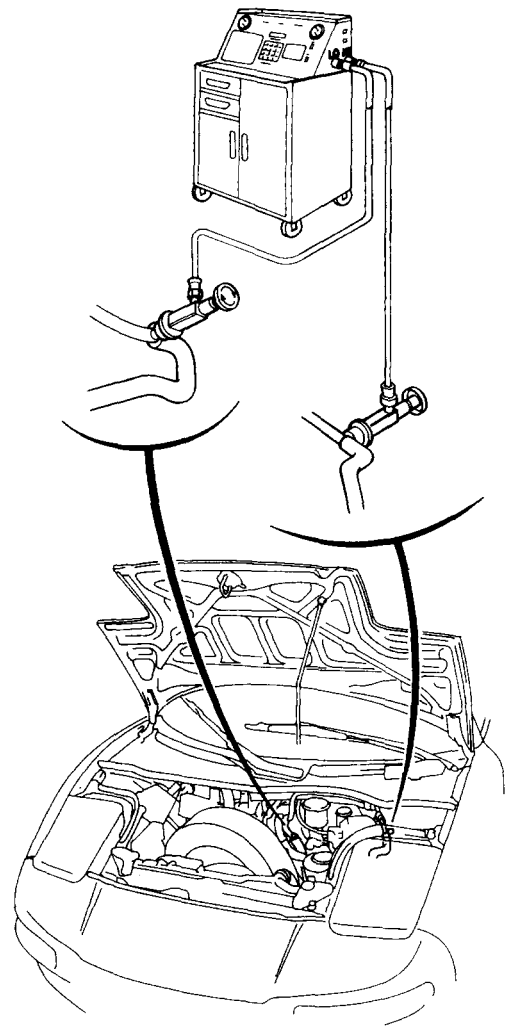

Charging

Only use service equipment that is U.L.-listed and is certified to meet the requirements of SAE J2210 to remove HFC-134a (R-134a) from the air conditioner system.

CAUTION: Exposure to air conditioner refrigerant and lubricant vapor or mist can irritate eyes, nose and throat. Avoid breathing the air conditioner refrigerant and lubricant vapor or mist.

If accidental system discharge occurs, ventilate work area before resuming service. Additional health and safety information may be obtained from the refrigerant and lubricant manufacturers.

Refrigerant capacity: 850 $^{+0}_{-50}$ g (30.0 $^{+0}_{-1.8}$ oz)

CAUTION: Do not overcharge the system; the compressor will be damaged.

Connect a R-134a refrigerant Recovery/Recycling/ Charging System to the vehicle as shown follow the equipment manufacturer's instructions.

Recovery/Recycling/Charging System

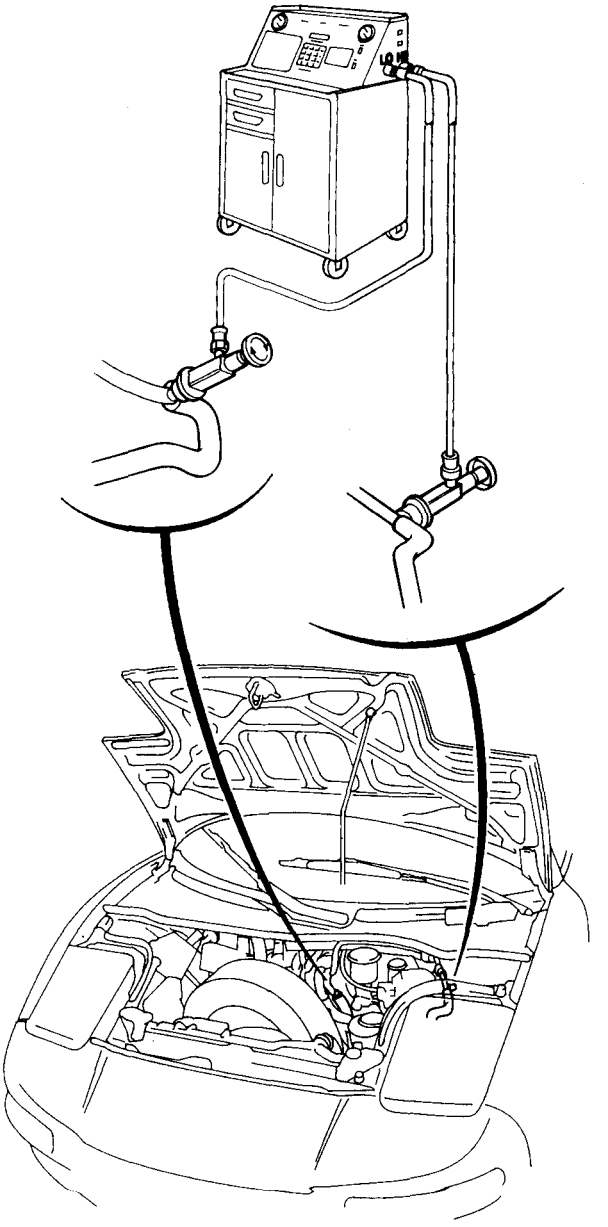

Body Electrical

*: Read SRS precautions before working in this area

Special Tools 23-2
Troubleshooting
Tips and Precautions 23-3
Five-step
Troubleshooting 23-5
Relay and Control Unit Locations
Front Compartment
'97-99 Models 23-7
'00-01 Models 23-2c
'02-05 Models 23-2e
Dashboard 23-8
Dashboard, Door and
Floor 23-9
Rear Bulkhead 23-10
Engine Compartment
'97-99 Models 23-12
'00-05 Models 23-3c
Battery
Component Location Index 23-67
Replacement 23-67
Test
'97-98 Model 23-68
'99-05 Models 23-2b
Under-dash Fuse/Relay Box
Removal/Installation 23-70
Ignition Switch
Test 23-72
Electrical Switch
Replacement 23-72
Steering Lock Removal/
Installation 23-73

Gauge Assembly

Gauge/Terminal Location
Index
'97-99 Models 23-121
'00-01 Models 23-29c
'02-05 Models 23-29e
*Removal 23-126
Bulb Locations
'97-01 Models 23-128
'02-05 Models 23-34e
Disassembly 23-129
Speedometer/Trip Meter/Odometer
Troubleshooting 23-130
VSS Replacement 23-133
Fuel Gauge
Gauge Test 23-134
Sending Unit Test 23-135
Coolant Temperature Gauge
Gauge Test
'97-99 Models 23-136
'00-05 Models 23-34c
Sending Unit Test 23-136
Engine Oil Pressure Gauge
Test 23-137
Engine Oil Pressure Warning
System
Switch Test 23-137
Brake Warning System
Parking Brake Switch
Test 23-138
Fluid Level Switch Test 23-138

Seat Belt Reminder System

Seat Belt Switch Test 23-139

Low Fuel Indicator

Indicator Light Test 23-139

Interlock System

*Component Location Index ... 23-140
Control Unit Input
Test 23-143
Key Interlock Solenoid Test ... 23-144
Shift Lock Solenoid 23-145
Parking Pin Switch 23-146

Safety Indicator

*Component Location
Index 23-147
Description 23-147
Indicator Input Test 23-152
Troubleshooting 23-154
Brake Light Failure Sensor
Test 23-155
Roof Lock Switch Test 23-156
Roof Holder Switch Test ... 23-157

A/T Gear Position Indicator

Component Location
Index 23-158
Indicator Input Test 23-160
A/T Gear Position Switch
Test 23-162
Replacement 23-163
Bulb Replacement 23-163

Integrated Control Unit

Input Test 23-166

Lights-on Reminder System

Chime Test 23-172

Key-in Reminder System

Ignition Key Switch Test 23-173

Lighting System

Component Location Index
'97-01 Models 23-174
'02-05 Models 23-35e
Switches 23-179
Retractable Headlight Control Unit
Input Test 23-180
Daytime Running Lights Control Unit
Input Test (Canada)
'97-01 Models 23-182
'02-05 Models 23-40e
Combination Light/Turn Signal Switch
Test 23-183
Headlight/Turn Signal Switch
Replacement 23-184
Retractor Switch
Removal 23-186
Test 23-187
Bulb Replacement 23-187
Retractor Motor
Replacement 23-188
Headlight Housing
Adjustment 23-189
Retractor Motor Test 23-190
Headlight Relay Test 23-191
Dimmer Relay Test 23-191
Retractor Relay Test 23-192
Retractor Cut/Taillight
Relay Test 23-192
Headlight High Beam/Dimmer Relay
(USA) ('02-05 Models) Test . 23-45e
Headlight Low Beam Relay Test
('02-05 Models) 23-45e
Taillight Relay Test
('02-05 Models) 23-46e
Dimmer Relay (Canada) Test
('02-05 Models) 23-46e
Headlights
Description 23-193
Adjustment
'97-01 Models 23-194
'02-05 Models 23-48e
Headlight Replacement
'97-01 Models 23-195
'02-05 Models 23-47e
Bulb Replacement
'97-01 Models 23-196
'02-05 Models 23-49e
HID Inverter Unit Replacement
('02-05 Models) 23-47e
HID Bulb Removal
('02-05 Models) 23-42e
HID Lamp System Troubleshooting
('02-05 Models) 23-44e
Daytime Running Lights (Canada)
Replacement 23-196
Front Turn Signal/Front Parking Lights
Replacement 23-197
Front Side Marker Lights
Replacement 23-197
Taillights
Replacement 23-198
Bulb Replacement 23-198
Rear Side Marker Lights
Replacement 23-199
License Plate Lights
Replacement 23-199
Glove Box Light
Replacement/Test 23-200

Ceiling/Courtesy/Trunk Lights

Component Location
Index 23-201
Ceiling Lights Test 23-203
Ceiling Light Replacement 23-205
Courtesy Light Test/
Replacement 23-206
Door Switch Test 23-206
Trunk Light Test/
Replacement 23-207
Latch Switch Test/
Replacement 23-207
Back-up Lights
Component Location
Index 23-208
Test 23-210
Brake Lights
Component Location
Index 23-211
Brake Switch Test 23-213
High Mount Brake Light
Test 23-213
Replacement 23-214
Rear Spoiler Replacement 23-214

Body Electrical (Cont'd)

Side Marker/Turn Signal/Hazard Flasher System
Component Location Index 23-215
Description 23-218
Turn Signal/Hazard Relay Input Test 23-220
Cancel Unit Input Test 23-221
Hazard Warning Switch Replacement 23-222
Hazard Warning Switch Test 23-223

Dash Lights Brightness Controller
Component Location Index 23-224
Control Unit Input Test 23-226
Controller Removal 23-227
Controller Test 23-228
Controller Light Bulb Replacement 23-228

Entry Light Timer System
Component Location Index 23-229
Foot Well Light Replacement 23-231

Clock
Removal 23-233
Terminals 23-233

Cigarette Lighter
Replacement 23-235
Relay Test 23-236

Stereo Sound System
Component Location Index 23-237
CD Changer ('04-05 Models) Removal 23-32
Unit Removal 23-240
Unit Terminals 23-242
Power Amplifier Relay Test 23-242
Power Antenna Motor Test 23-243
Replacement 23-244
Antenna Mast Replacement 23-244
Antenna Tube Replacement 23-246
Front/Rear Speaker Replacement 23-247
Foot Well Bass Speaker Replacement 23-247

Horns
*Component Location Index
'97-01 Models 23-248
'02-05 Models 23-50e
Description
'97-01 Models 23-248
'02-05 Models 23-50e
Horn Test
'97-01 Models 23-250
'02-05 Models 23-52e
Relay Test 23-251
High Horn Relay Test ('02-05 Models) 23-53e
Security/Low Horn Relay Test ('02-05 Models) 23-53e
*Switch Test 23-251

Trunk Opener
Component Location Index . . . 23-254
Main Switch Test 23-255
Opener Switch Test 23-256
Solenoid Test/Replacement . . . 23-256

Power Mirrors
Component Location Index . . . 23-257
Function Test 23-259
Switch Removal 23-260
Switch Test 23-260
Door Mirror
Test 23-261
Replacement 23-261
Door Mirror Actuator Replacement 23-262

Power Door Locks
Component Location Index
'97-03 Models 23-263
'04-05 Models 23-13g
Troubleshooting 23-265
Control Unit Input Test
'97-03 Models 23-266
'04-05 Models 23-16g
Driver's Door Actuator Test 23-268
Keyless Buzzer Test/Replacement ('04-05 Models) 23-20g
Transmitter Test ('04-05 Models) 23-21g
Transmitter Programming . . 23-21g
Passenger's Door Actuator Test 23-269
Door Lock Switch Test 23-270

Power Windows
Component Location Index 23-271
Description 23-271
Troubleshooting 23-273
Control Unit Input Test
'97-99 Models 23-274
'00-05 Models 23-39c
Master Switch Test 23-275
Passenger's Switch Test 23-276
Replacement 23-277
Master Switch Replacement 23-276
Switch Light Bulb Replacement 23-277
Driver's Window Motor Test 23-278
Passenger's Window Motor Test 23-278
Relay Test 23-279

Power Seats
Component Location Index 23-280
Seat Switch Test 23-282
Motor Test 23-283

Rear Window Defogger
Component Location Index 23-284
Description 23-284
Troubleshooting 23-286
Switch Replacement 23-287
Relay Test 23-288
Switch Test 23-289
Function Test 23-290
Defogger Wire Repair 23-290

Wiper/Washers
Component Location Index 23-291
Description 23-291
Troubleshooting 23-293
Intermittent Wiper Relay Test 23-293
High Relay/Washer Relay Test 23-294
Low Relay Test 23-294
Windshield Wiper Motor Test 23-295
Replacement 23-296
Windshield Wiper/Washer Switch Replacement 23-296
Test 23-298
Washer Replacement 23-299
Washer Motor Test 23-299

Security Alarm System
Component Location Index 23-312
Description 23-314
Wiring Connections 23-320
Troubleshooting 23-321
Control Unit Input Test
'97-01 Models 23-322
'02-03 Models 23-58e
'04-05 Models 23-26g
Trunk Latch Switch Test 23-325
Door Switch Test 23-325
Indicator Replacement 23-326
Trunk Key Cylinder Switch Test 23-326
Engine Compartment Lid Switch Test 23-327
Hood Switch Test 23-327
Ignition Key Switch Test 23-328

Immobilizer System
Component Location Index 23-329
Description 23-330
Problems and Replacement Parts 23-332
Control Unit Input Test 23-334
Immobilizer Receiver and Transponder (Key) Test 23-335
Immobilizer Receiver Replacement 23-336

Engine Electrical

Starting System

Component Location Index 23–75
Description 23–76
Starter Test 23–78
Starter Cut Relay Test 23–80
Clutch Interlock Switch Test (M/T) 23–80
Starter Solenoid Test 23–81
Starter
- Replacement 23–81
- Overhaul 23–82

Starter Brush Holder Test 23–83
Starter Brush Inspection 23–83
Armature Inspection and Test 23–84
Solenoid Plunger Inspection 23–86
Starter Field Winding Test 23–86
Overrunning Clutch Inspection 23–87
Starter Reassembly 23–87

Ignition System

Component Location Index 23–88
Description 23–89
Ignition Timing Inspection 23–91
Idle Speed Inspection 23–92
Ignition Control Module (ICM)
- Replacement 23–92

Input Test 23–93
Ignition Coil/Spark Plugs
- Removal 23–94

Ignition Coil Test 23–95
Spark Plug Inspection 23–96
Noise Condenser Capacity Test 23–97

Charging System

Component Location Index 23–98
Troubleshooting
- Charging System Light 23–100
- Alternator/Regulator Test 23–102

Alternator
- Replacement 23–105
- Overhaul 23–106

Rectifier Test 23–107
Alternator Brush Inspection 23–107
Rotor Slip Ring Test 23–108
Stator Test 23–108
Alternator Belt Adjustment 23–109

Radiator and Condenser Fan Controls

Component Location Index 23–110
Description 23–114
Troubleshooting 23–115
Control Unit Terminals 23–116
Radiator Fan Resistor Test 23–116
Radiator Fan Motor Test 23–117
Condenser Fan Motor Test 23–117
Engine Compartment Fan Motor (A/T)
- Test 23–118
- Removal 23–118

Fan Relay Tests 23–119
Radiator Fan Control Sensor Test 23–120

Cruise Control

Component Location Index 23–300
Description 23–302
Troubleshooting 23–304
Control Unit Input Test 23–305
Main Switch
- Replacement 23–307
- Test 23–308

Set/Resume Switch Test 23–309
Brake Switch Test 23–310
Clutch Switch Test 23–310
A/T Gear Position Switch Test 23–311

Special Tools

Ref. No.	Tool Number	Description	Qty	Page Reference
①	07JAA – 001000C	Antenna Nut Wrench	1	23-244, 23-246
②	07JGG – 001010A	Belt Tension Gauge	1	23-109
③	07LAJ – PT3020A	Test Harness	1	23-132
④*	07LAZ – SL40300	Test Harness C	1	23-252, 23-309
⑤	07PAZ – 0010100	SCS Service Connector	1	23-91

*: Included in SRS Tool Set 07MAZ – SM5000B

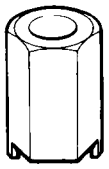

①

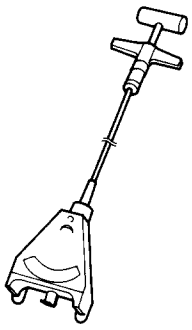

②

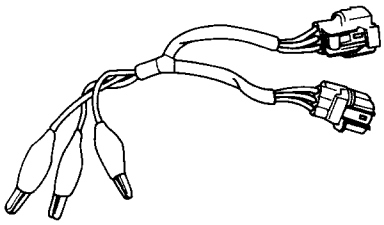

③

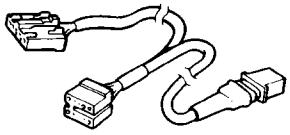

④

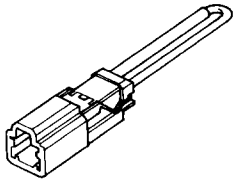

⑤

Troubleshooting

Tips and Precautions

Before Troubleshooting

- Check applicable fuses in the appropriate fuse box.
- Check the battery for damage, state of charge, and clean and tight connections.
- Check the alternator belt tension.

CAUTION:

- **Do not quick-charge a battery unless the battery ground cable has been disconnected. Otherwise you will damage the alternator diodes.**
- **Do not attempt to crank the engine with the battery ground cable loosely connected or you will severely damage the wiring.**

Handling Connectors

- Make sure the connectors are clean and have no loose wire terminals.
- Make sure multiple cavity connectors are packed with grease (except watertight connectors).
- All connectors have push-down release type locks.

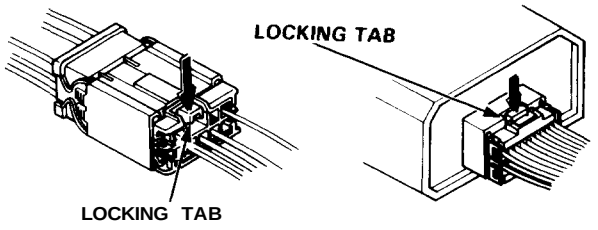

- Some connectors have a clip on their side used to attach them to a mount bracket on the body or on another component. This clip has a pull type lock.

- Some mounted connectors cannot be disconnected unless you first release the lock and remove the connector from its bracket.

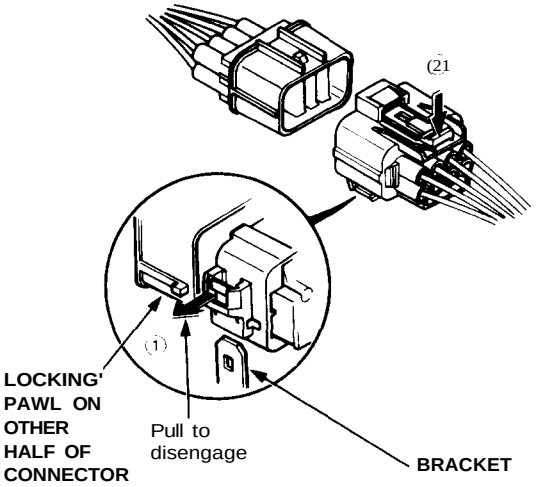

- Never try to disconnect connectors by pulling on their wires; pull on the connector halves instead.
- Always reinstall plastic covers.

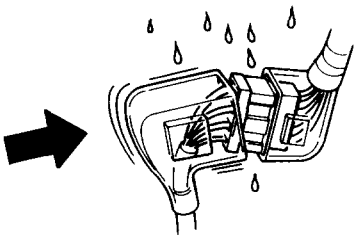

- Before connecting connectors, make sure the terminals are in place and not bent.

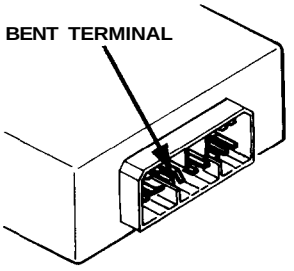

- Check for loose retainer and rubber seals.

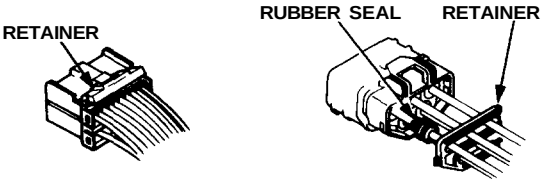

- The backs of some connectors are packed with grease. Add grease if needed. If the grease is contaminated, replace it.

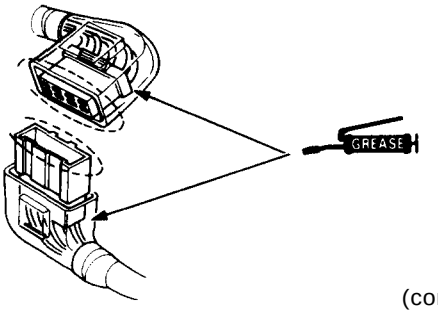

(cont'd)

Tips and Precautions (cont'd)

- Insert the connector all the way, and make sure it is securely locked.
- Position wires so that the open end of the cover faces down.

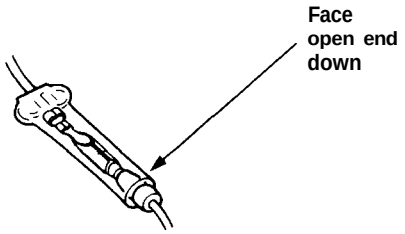

Handling Wires and Harnesses

- Secure wires and wire harnesses to the frame with their respective wire ties at the designated locations.
- Remove clips carefully; don't damage their locks.

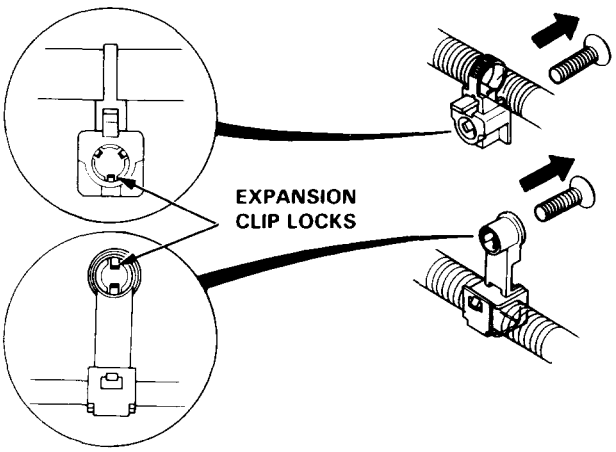

Slip pliers under the clip base and through the hole at an angle, then squeeze the expansion tabs to release the clip.

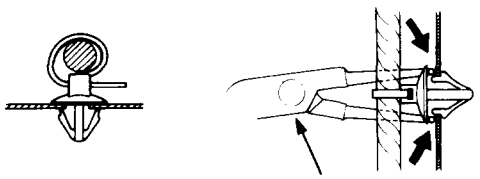

- After installing harness clips, make sure the harness doesn't interfere with any moving parts.
- Keep wire harnesses away from exhaust pipes and other hot parts, from sharp edges of brackets and holes, and from exposed screws and bolts.
- Seat grommets in their grooves properly.

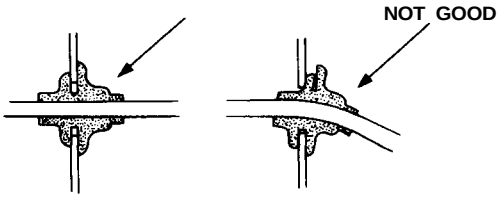

Testing and Repairs

- Do not use wires or harnesses with broken insulation. Replace them or repair them by wrapping the break with electrical tape.
- After installing parts, make sure that no wires are pinched under them.
- When using electrical test equipment, follow the manufacturer's instructions and those described in this manual.
- If possible, insert the probe of the tester from the wire side (except waterproof connector).

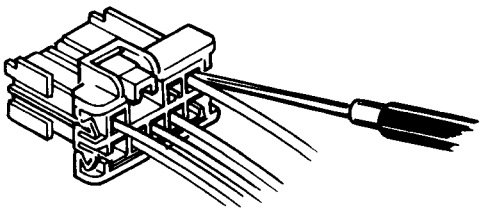

- Use a probe with a tapered tip.

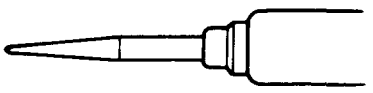

- Refer to the instructions in the Honda Terminal Kit for identification and replacement of connector terminals.

Five-step Troubleshooting

1. **Verify The Complaint**
   Turn on all the components in the problem circuit to verify the customer complaint. Note the symptoms. Do not begin disassembly or testing until you have narrowed down the problem area.

2. **Analyze The Schematic**
   Look up the schematic for the problem circuit. Determine how the circuit is supposed to work by tracing the current paths from the power feed through the circuit components to ground. If several circuits fail at the same time, the fuse or ground is a likely cause.

   Based on the symptoms and your understanding of the circuit operation, identify one or more possible causes of the problem.

3. **Isolate The Problem By Testing The Circuit**
   Make circuit tests to check the diagnosis you made in step 2. Keep in mind that a logical, simple procedure is the key to efficient troubleshooting. Test for the most likely cause of failure first. Try to make tests at points that are easily accessible.

4. **Fix The Problem**
   Once the specific problem is identified, make the repair. Be sure to use proper tools and safe procedures.

5. **Make Sure The Circuit Works**
   Turn on all components in the repaired circuit in all modes to make sure you've fixed the entire problem. If the problem was a blown fuse, be sure to test all of the circuits on that fuse. Make sure no new problems turn up and the original problem does not recur.

Relay and Control Unit Locations

Front Compartment

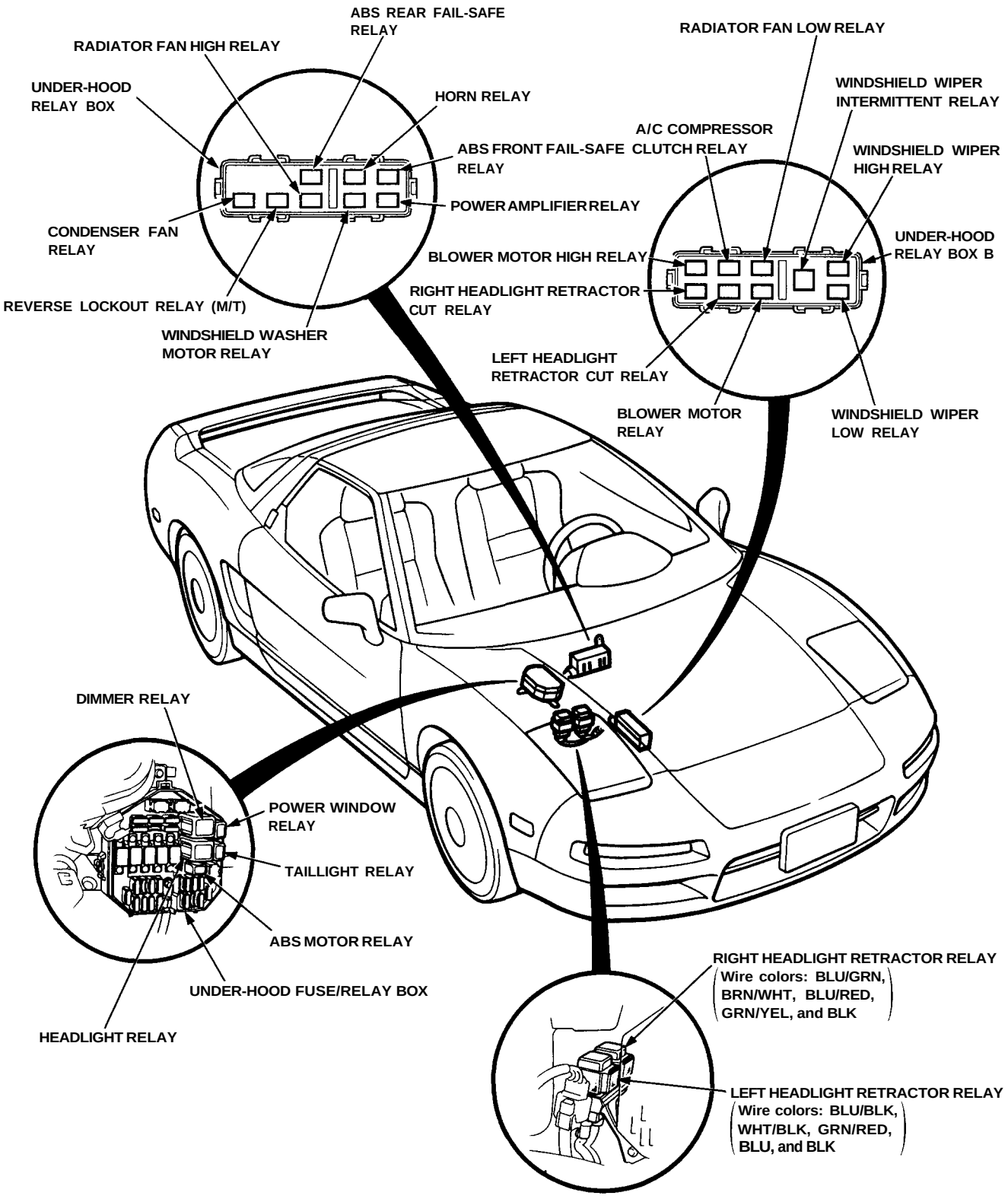

Relay and Control Unit Locations

Dashboard

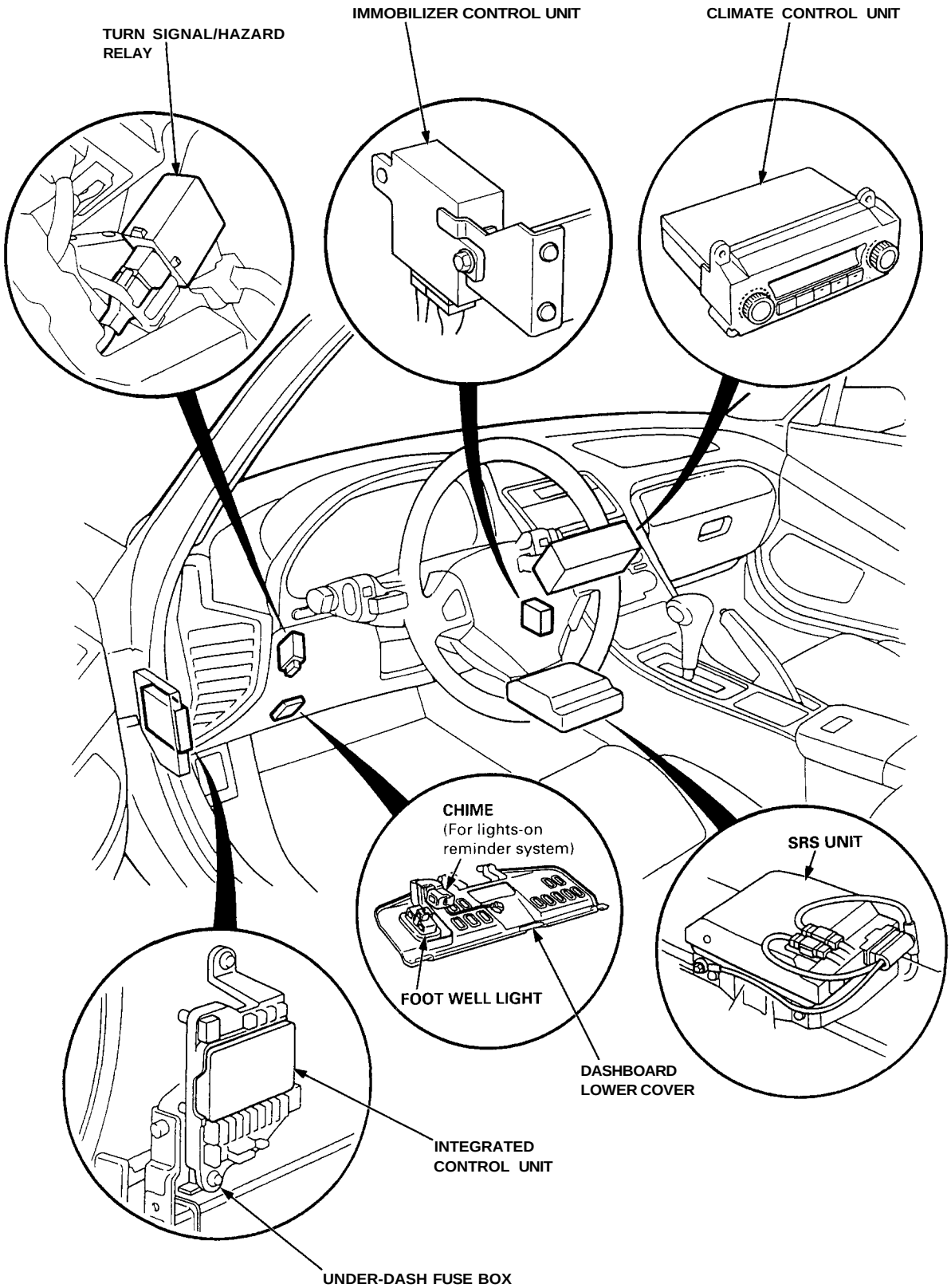

Dashboard, Door and Floor

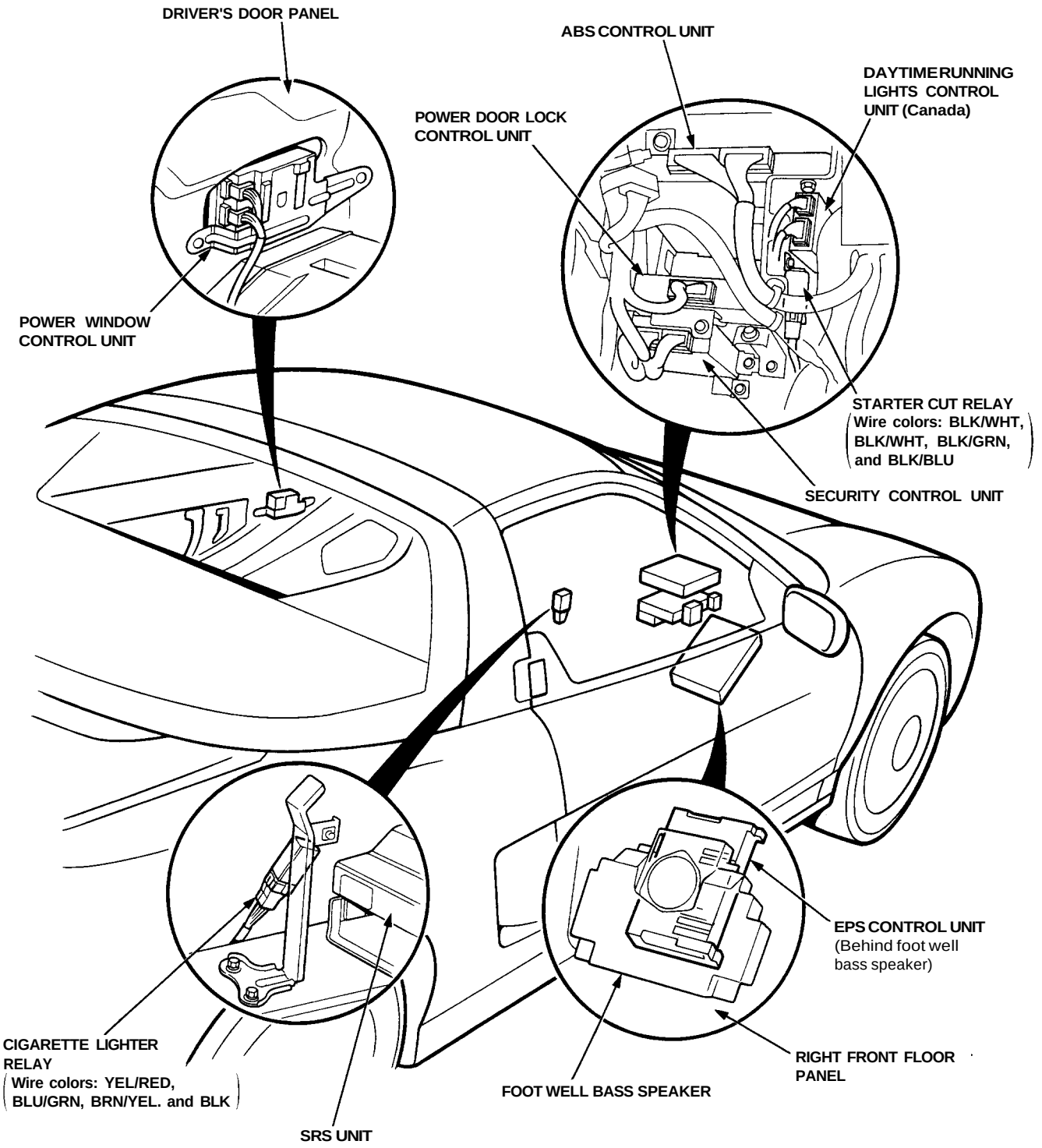

Relay and Control Unit Locations

Rear Bulkhead

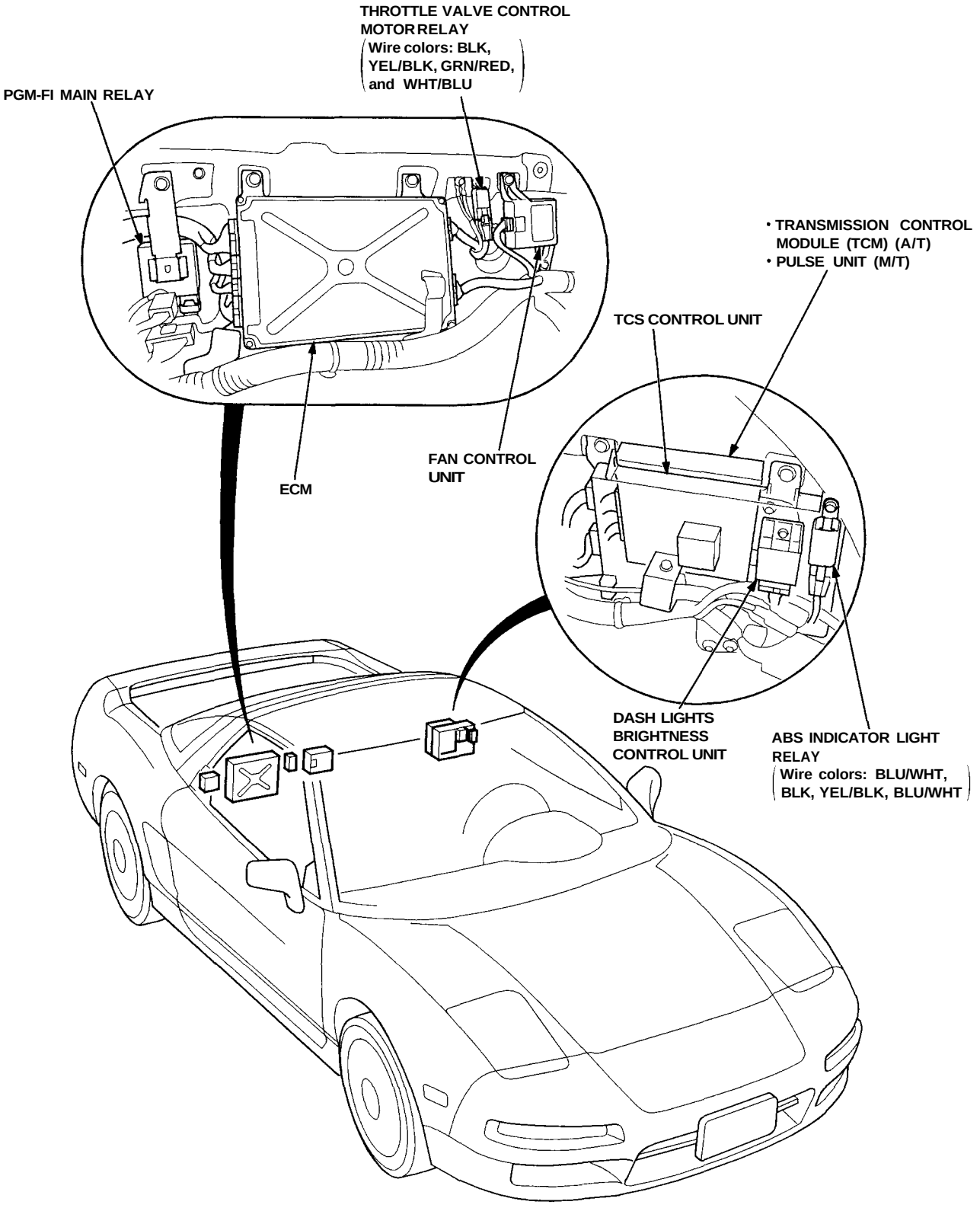

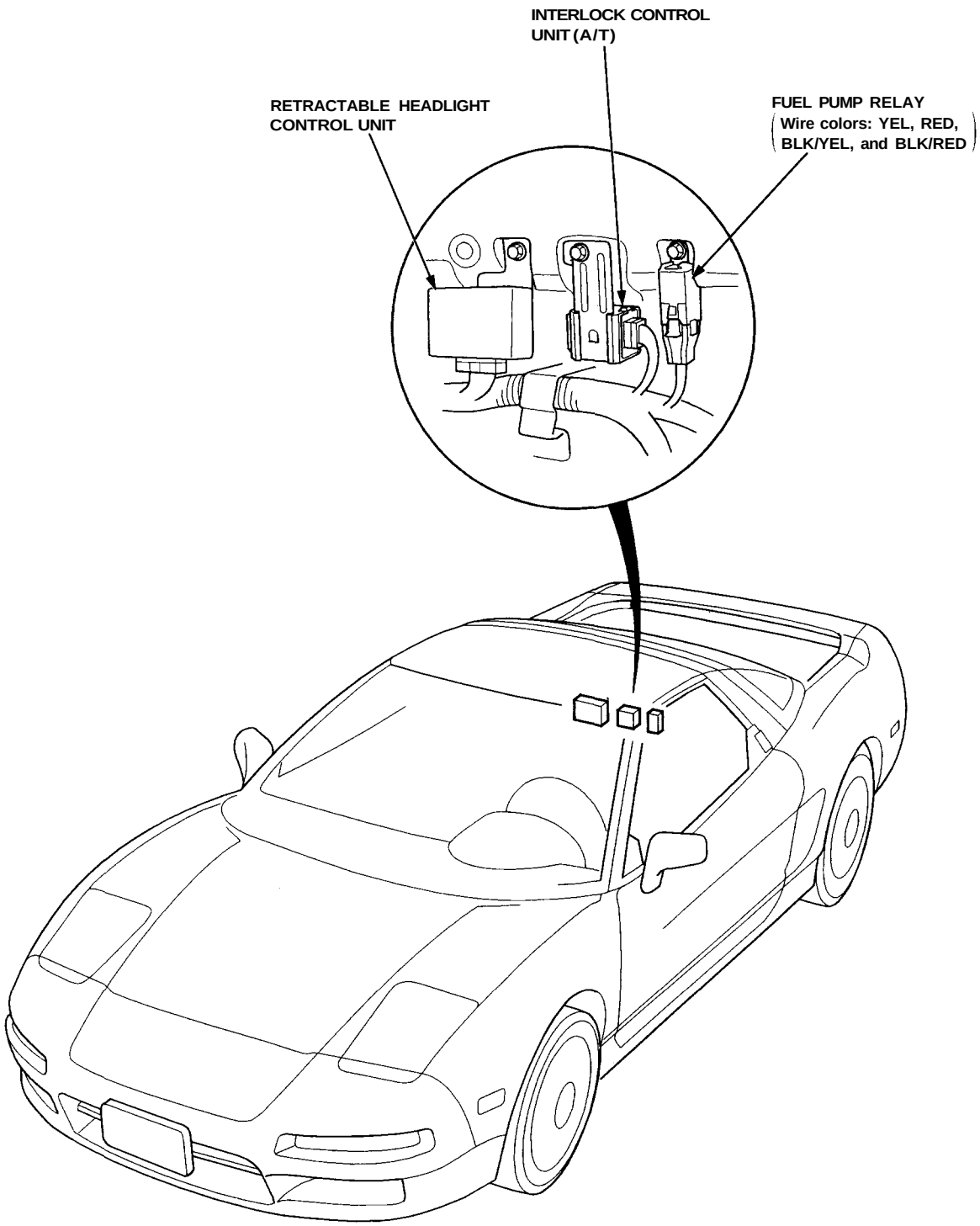
INTERLOCK CONTROL UNIT (A/T)
RETRACTABLE HEADLIGHT CONTROL UNIT
FUEL PUMP RELAY
(Wire colors: YEL, RED, BLK/YEL, and BLK/RED)

Relay and Control Unit Locations

Engine Compartment

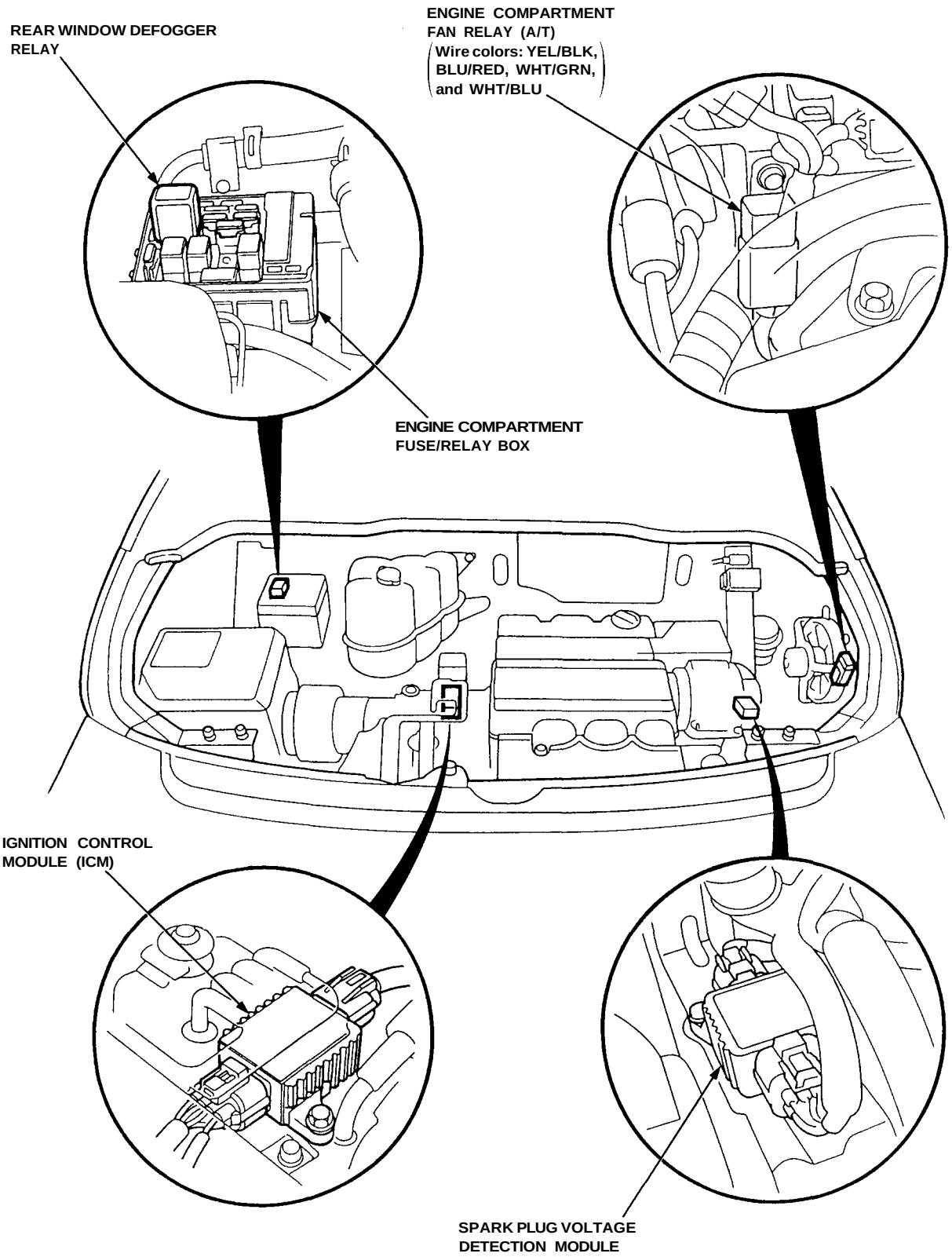

Battery

Component Location Index

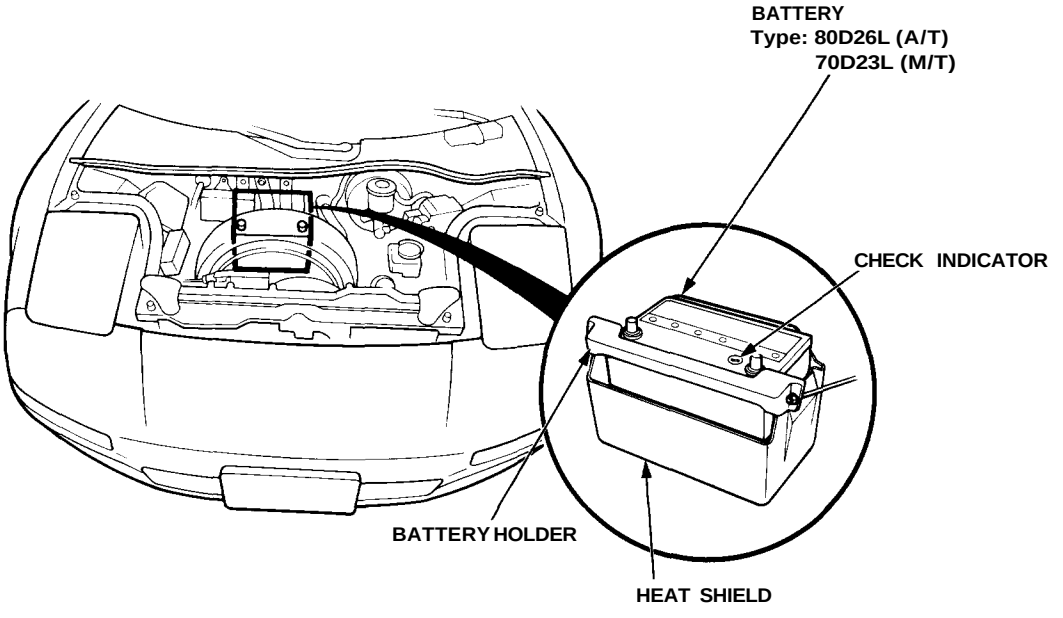

Replacement

1. Remove the spare tire and the spare tire holder.
2. Disconnect both the negative cable and positive cable from the battery.
3. Remove the battery holder, then take out the battery.

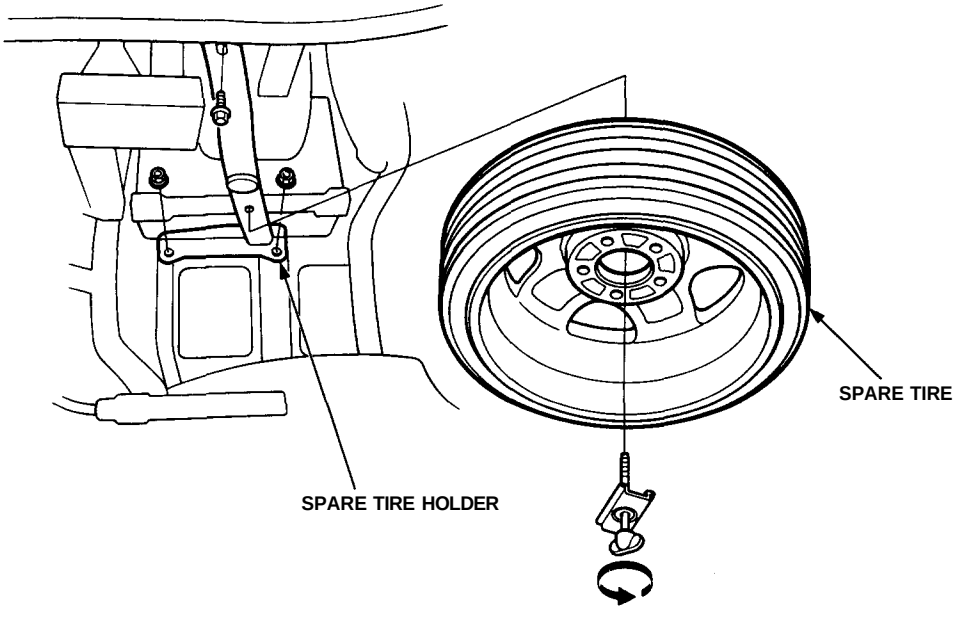

Battery

Test

⚠ WARNING

- **Battery fluid (electrolyte) contains sulfuric acid. It may cause severe burns if it gets on your skin or in your eyes. Wear protective clothing and a face shield.**
  - **— If electrolyte gets on your skin or clothes, rinse it off with water immediately.**
  - **— If electrolyte gets in your eyes, flush it out by splashing water in your eyes for at least 15 minutes; call a physician immediately.**
- **A battery gives off hydrogen gas. If ignited, the hydrogen will explode and could crack the battery case and splatter acid on you. Keep sparks, flames, and cigarettes away from the battery.**
- **Overcharging will raise the temperature of the electrolyte. This may force electrolyte to spray out of the battery vents. Follow the charger manufacturer's instructions and charge the battery at a proper rate.**

Use either a JCI or Bear ARBST tester, and follow the manufacturer's procedures. If you don't have one of these computerized testers, follow this conventional test procedure:
To get accurate results, the temperature of the electrolyte must be between 70°F (21°C) and 100°F (38°C).

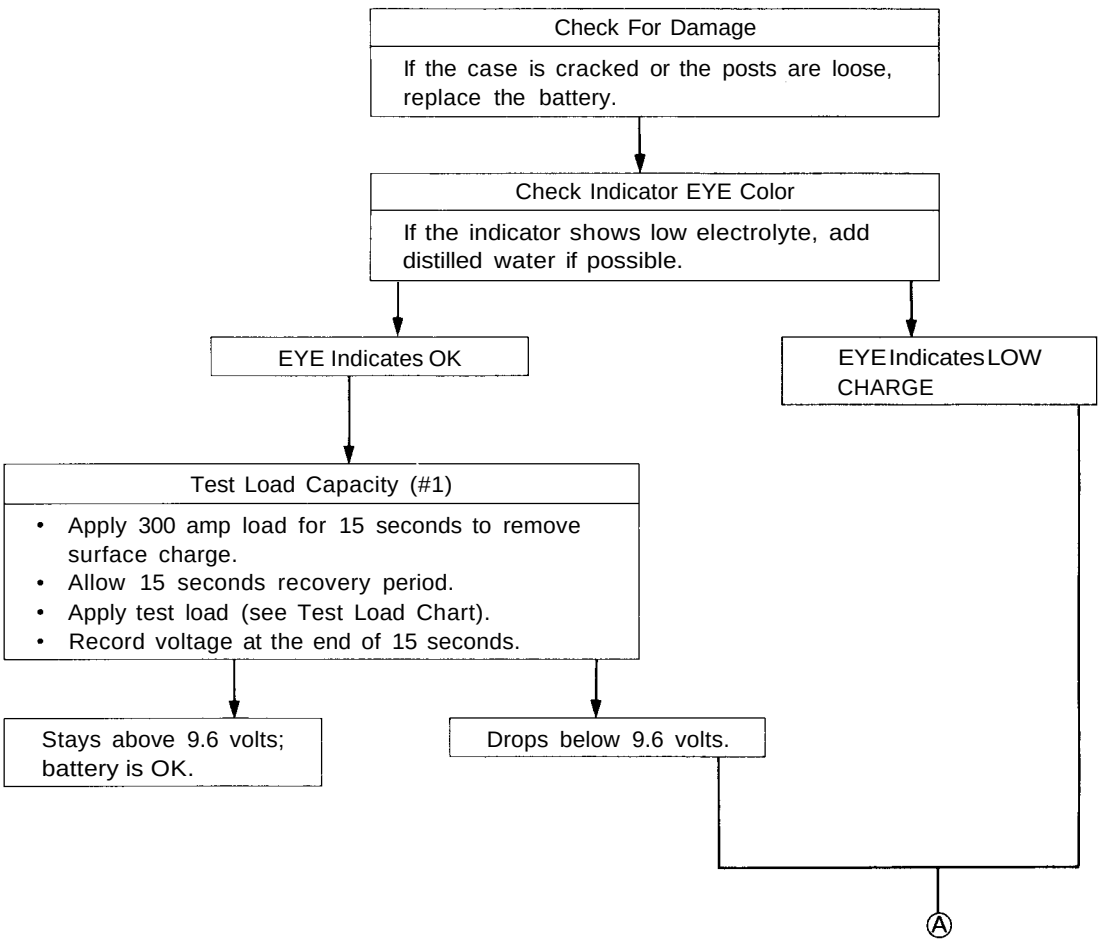

Ⓐ

Charge on High Setting (40 amps)

Charge until EYE shows charge is OK; plus an additional 30 minutes to assure full charge.
NOTE: If the battery charge is very low, it may be necessary to bypass the charger's polarity protection circuitry.
If the EYE does not show charge is OK within three hours, the battery is no-good; replace it. Write down how long the battery was charged.

Test Load Capacity (#2)

- Apply 300 amp load for 15 seconds to remove surface charge.
- Allow 15 seconds recovery period.
- Apply test load (see Test Load Chart).
- Record voltage at the end of 15 seconds.

Stays above 9.6 volts; battery is OK.

Drops below 9.6 volts; battery is no-good.

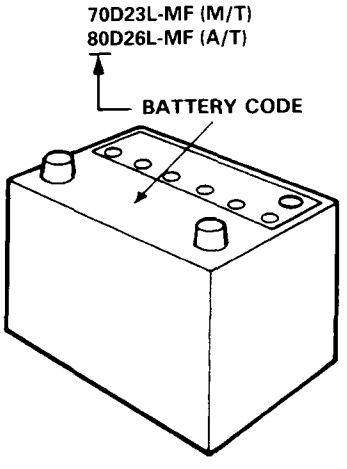

TEST LOAD CHART

Use the test load of 112 the cold cranking amps (CCA) printed on the label on the top of the battery. If neither is indicated, use the information below:

BATTERY CODE	COLD CRANKING AMPS (CCA)	LOAD (amps)
80	550	270
70	440	220

Under-dash Fuse Box

Removal/Installation

SRS components are located in this area. Review the SRS component locations, precautions, and procedures in the SRS (section 24) before performing repairs or service.

Removal:

1. Disconnect both the negative cable and positive cable from the battery.
2. Carefully remove the side sill pad (pull it up, rear end first).
3. Remove the fuse box door.

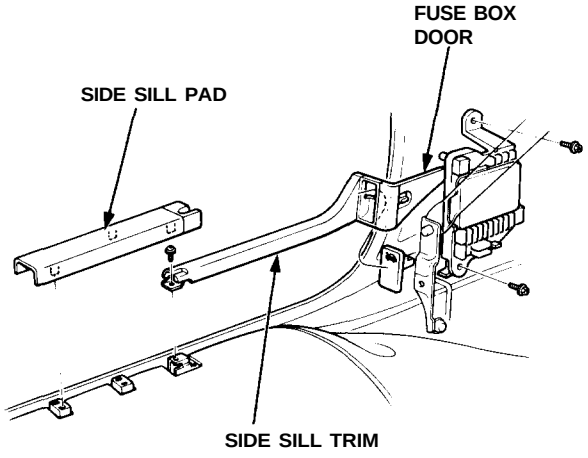

4. Remove the three screws, then remove the side sill trim.
5. Remove the under-dash fuse box mounting bolts.
6. Disconnect the under-dash fuse box connectors.

   NOTE: The SRS main harness connector is double locked. To remove it, first lift the connector lid, then press the connector tab down and pull the connector out.

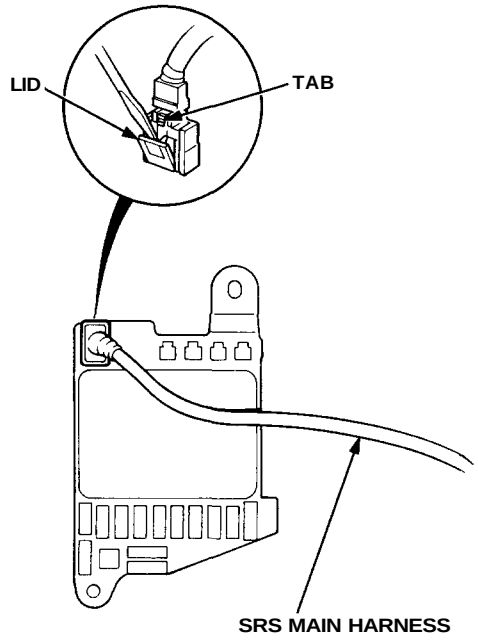

7. Take out the under-dash fuse box.

Installation:

1. Connect the connectors to the under-dash fuse box.

   NOTE: To reinstall the SRS main harness connector, push it into position until it clicks, then close the connector lid.

2. Install the under-dash fuse box.

3. Install the side sill trim, fuse box door and door sill pad.

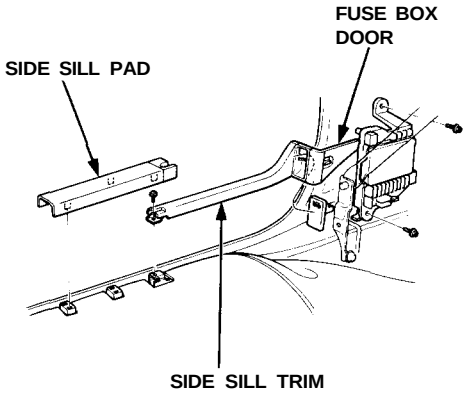

4. Connect both the negative cable and positive cable to the battery.

5. Confirm that all systems work properly.

Ignition Switch

Test

1. Remove the dashboard lower cover (see next column).
2. Disconnect the 7P connector from the floor wire harness.
3. Check for continuity between the terminals in each switch position according to the table.

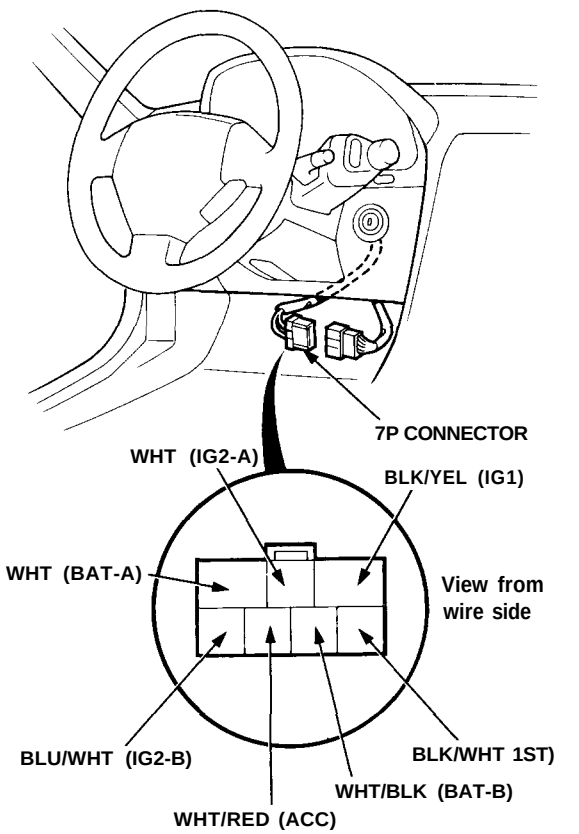

Terminal / Position	WHT/ RED (ACC)	WHT/ BLK (BAT-B)	BLU/ WHT (IG2-B)	WHT (BAT-A)	BLK/ YEL (IG1)	WHT (IG2-A)	BLK/ WHT (ST)
0							
I	○	○					
II	○	○	○	○	○	○	
III				○	○		○

Electrical Switch Replacement

1. Remove the dashboard lower cover, and disconnect the floor wire harness connectors.

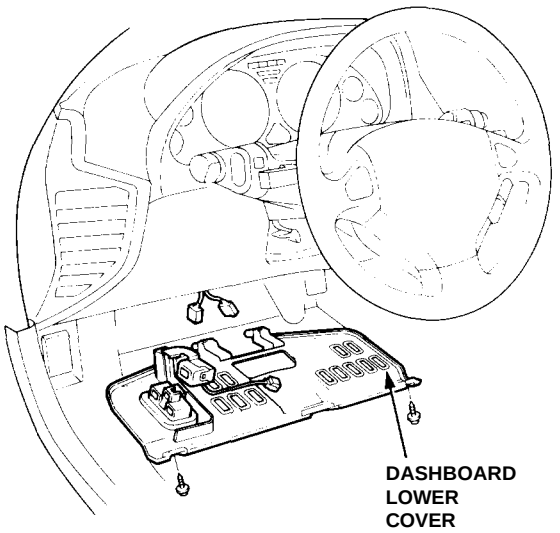

2. Disconnect the 7P connector from the floor wire harness.
3. Insert the key, and turn it to "0".
4. Remove the two screws, and replace the switch.

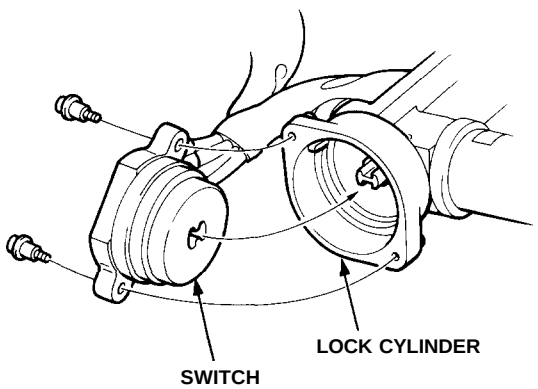

Steering Lock Removal/Installation

SRS components are located in this area. Review the SRS component locations, precautions, and procedures in the SRS (section 24) before performing repairs or service.

1. Remove the dashboard lower cover, and disconnect the connectors.

2. Remove the dashboard lower pad.

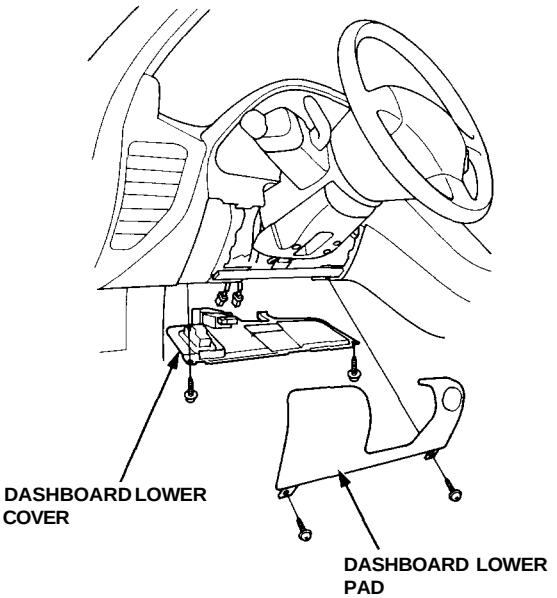

3. Remove the tilt cover.

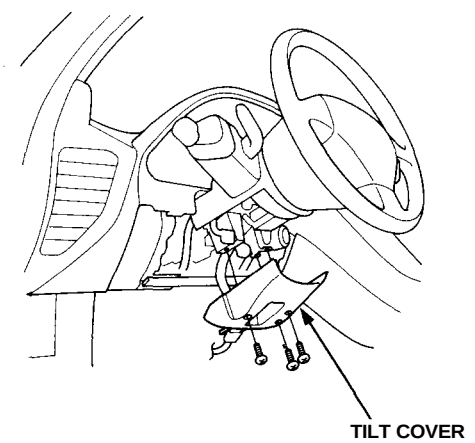

4. Remove the steering column lower and upper covers. Be careful not to damage the steering column covers.

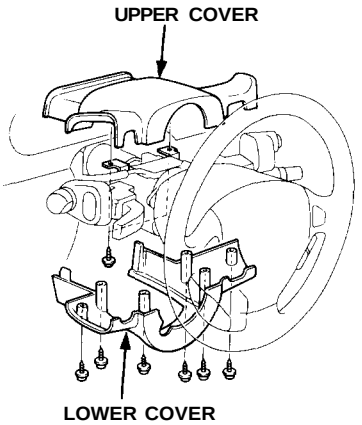

5. Remove the dashboard brace.

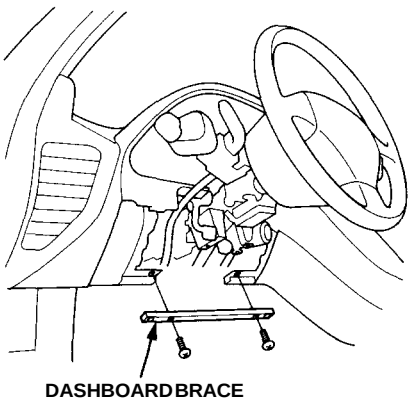

6. Disconnect the ignition switch 7P and 8P connectors.

7. Remove the column holder mounting bolts and the mounting nuts, and lower the steering column assembly. Be careful not to damage the SRS wire harness.

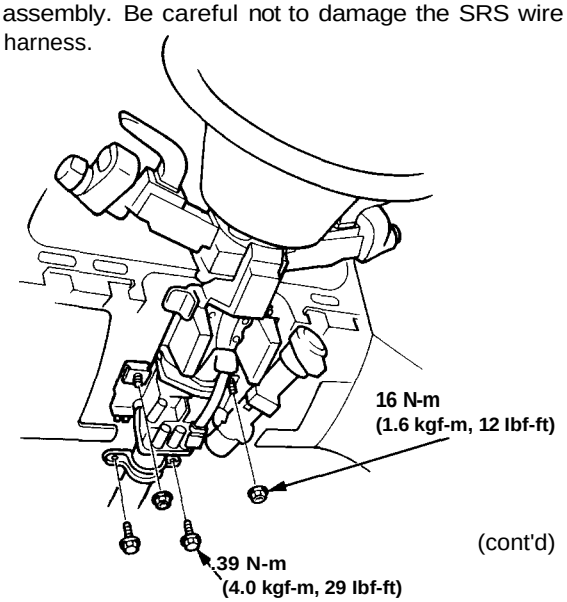

(cont'd)

Ignition Switch

Steering Lock Removal/Installation (cont'd)

8. Center-punch the shear bolt, and drill its head off with a 5 mm (3/16 in) drill bit. Do not damage the switch body.

9. Remove the shear bolt from the switch body.

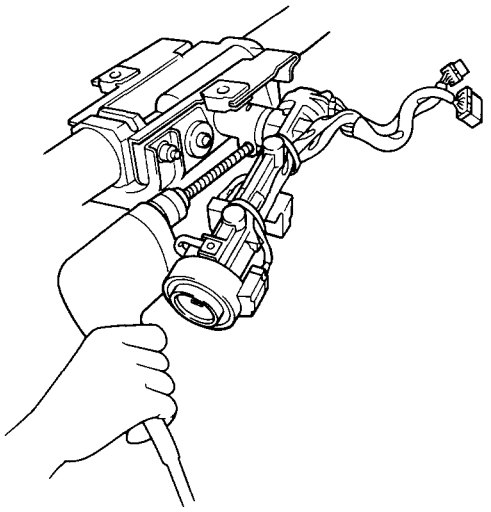

10. Insert the key, and turn it to "I".

11. Push the lock pin, and pull out the steering lock assembly.

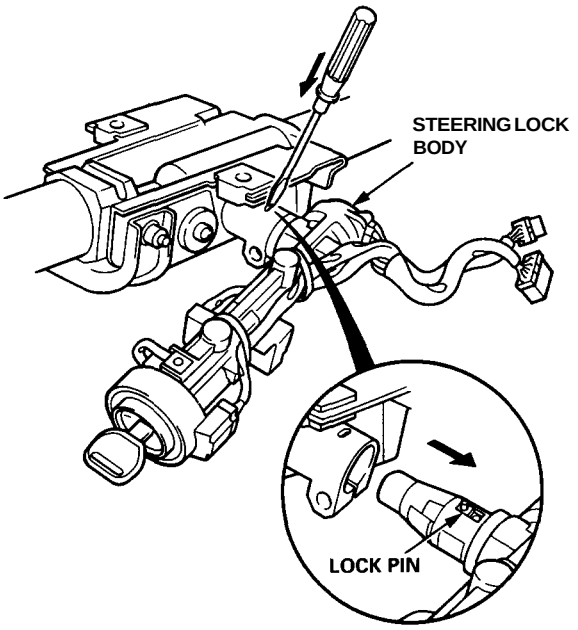

Installation:

1. Turn the key to "I", push the pin, and insert the steering lock assembly into the steering column until it clicks into place.

2. Loosely tighten the new shear bolt. Make sure the projection on the ignition switch is aligned with the hole in the steering column.

3. Insert the ignition key, and check for proper operation of the steering wheel lock and that the ignition key turns freely.

4. Tighten the shear bolt until the hex head twists off.

5. Install in the reverse order of removal. Install the 3P connector harness carefully because this harness serves as communication link.

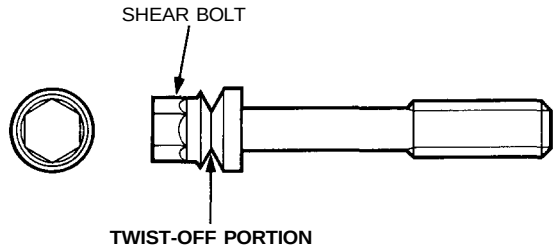

6. After installing, check the immobilizer system.

Component Location Index

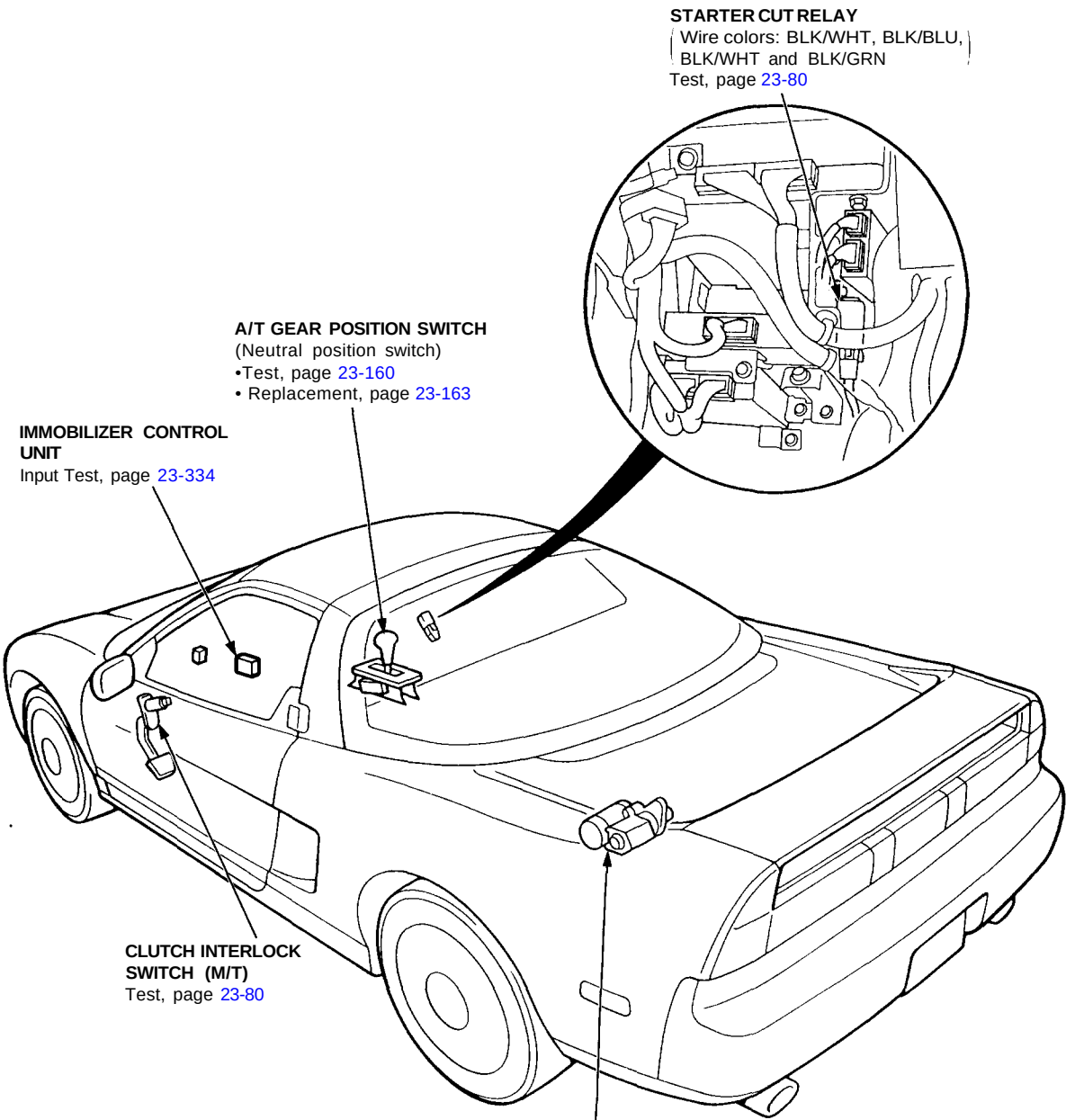

Description

Starter Interlock System (M/T):
The starter interlock system prevents the engine from starting unless the clutch pedal is fully depressed.

The clutch interlock switch turns on at the position where the clutch disengages: 15 - 20 mm (0.59 - 0.79 in) from fully depressed position.

NOTE: A full stroke of the clutch pedal is 125 mm (4.92 in) from the fully released position.

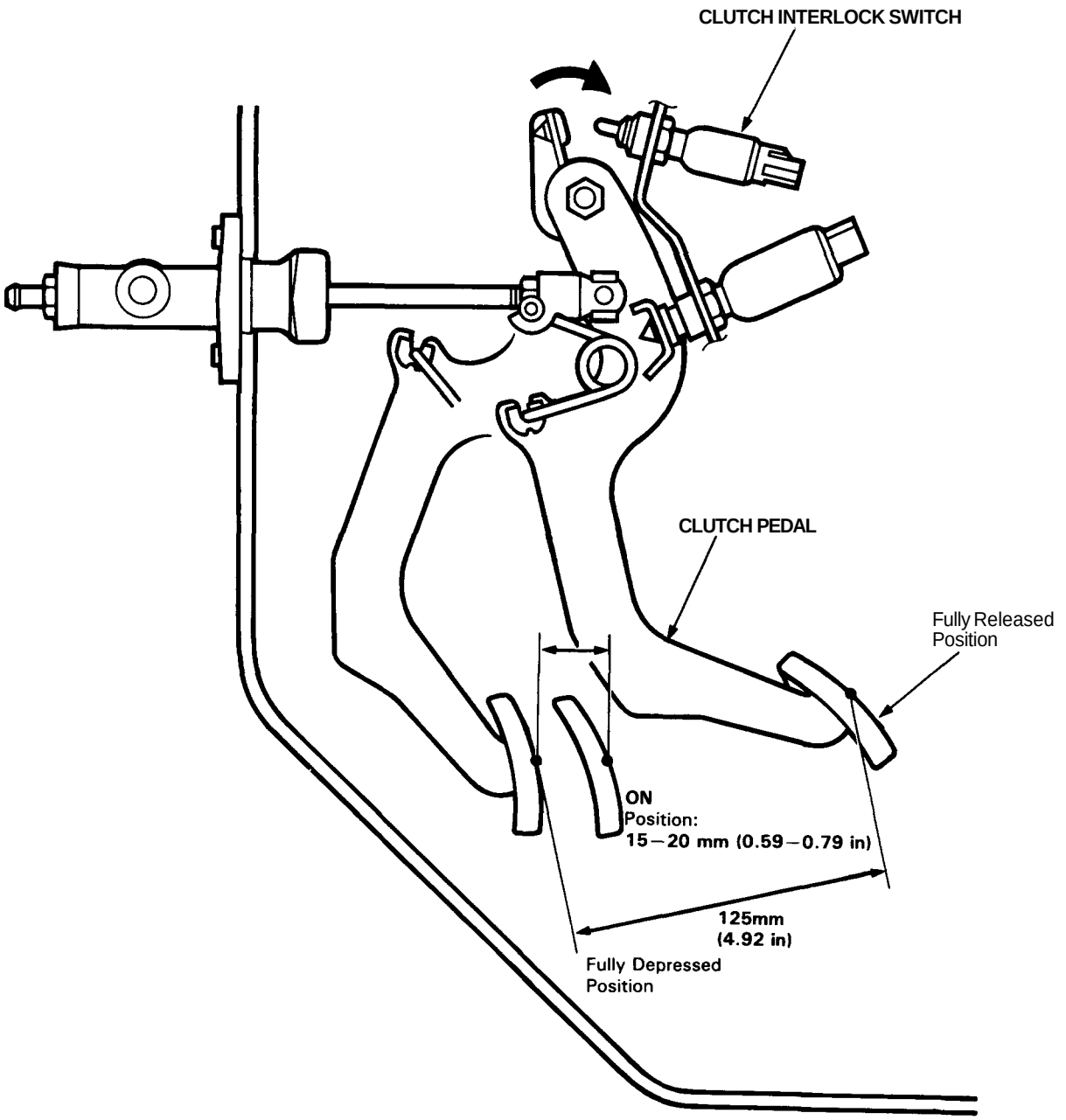

Starter Test

NOTE: The air temperature must be between 59 and 100°F (15 and 38°C) before testing.

Recommended Procedure:

- Use a starter system tester.
- Connect and operate the equipment in accordance with manufacturer's instructions.

Alternate Procedure:

- Use the following equipment:
  — Ammeter, 0-400 A
  — Voltmeter, 0-20 V (accurate within 0.1 volt)
  — Tachometer, 0-1,200 rpm

- Hook up voltmeter and ammeter as shown.

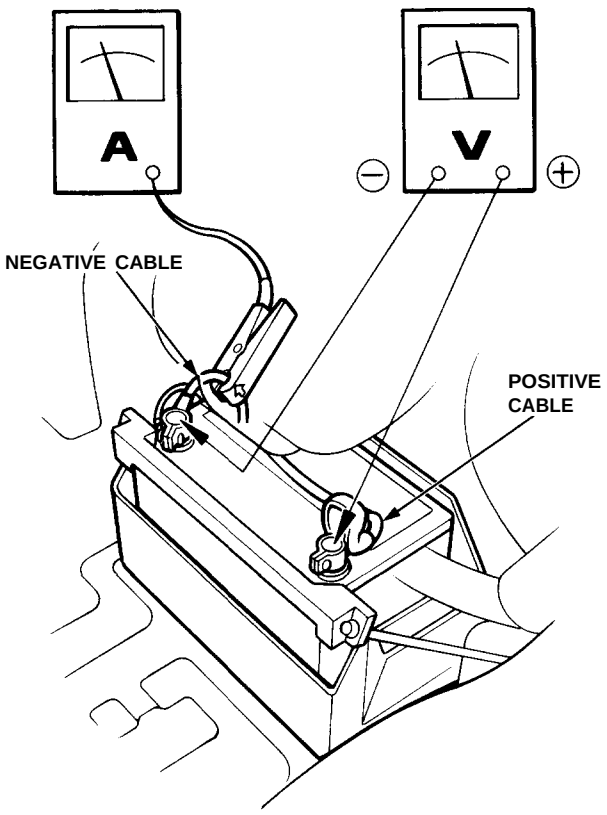

1. Disconnect the No. 13 (30 A) fuse from the engine compartment fuse/relay box.

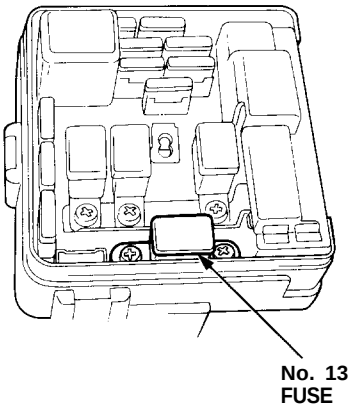

2. Check the starter engagement:
   Depress the clutch pedal all the way (M/T) or shift to [P] or [N] position (A/T), and turn the ignition switch to "Start (III)". The starter should crank the engine.
   NOTE: On cars equipped with manual transmission, the engine will not crank unless the clutch pedal is fully depressed.

   - If the starter still does not crank the engine, check the battery, battery positive cable, ground and the wire connections for looseness or corrosion.

   - Test again.
     If the starter still does not crank the engine, bypass the ignition switch circuit as follows: Unplug the connector (BLK/WHT wire) from the starter. Connect a jumper wire from the battery positive (+) terminal to the solenoid terminal. The starter should crank the engine.

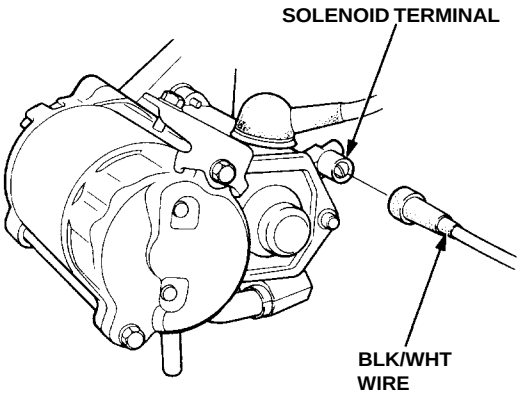

— If the starter still does not crank the engine, remove the starter and diagnose its internal problems.

— If the starter cranks the engine, check for an open in the BLK/WHT wire and connectors between the starter and ignition switch. Check the ignition switch.
On cars with automatic transmission, check the A/T gear position switch (neutral position switch) and connector.
On cars with manual transmission, check the starter cut relay, clutch interlock switch and connectors.

NOTE: Check the No. 29 (50 A) fuse and the starter cut relay, and inspect the security alarm system.

3. Check for wear or damage:
The starter should crank the engine smoothly and steadily.

If the starter engages, but cranks the engine erratically, remove the starter motor. Inspect the starter, drive gear and flywheel ring gear for damage.
Check the drive gear overrunning clutch for binding or slipping when the armature is rotated with the drive gear held. Replace the gears if damaged.

4. Check cranking voltage and current draw:
Voltage should be no less than 8.5 volts.
Current should be no more than 350 amperes.

If voltage is too low, or current draw too high, check for:

- Low battery.
- Open circuit in starter armature commutator segments.
- Starter armature dragging.
- Shorted armature winding.
- Excessive drag in engine.

5. Check cranking rpm:
Engine speed during cranking should be above 100 rpm.

If speed is too low, check for:

- Loose battery or starter terminals.
- Excessively worn starter brushes.
- Open circuit in commutator segments.
- Dirty or damaged helical spline or drive gear.
- Defective drive gear overrunning clutch.

6. Check the starter disengagement:
Depress the clutch pedal all the way (M/T) or shift to [P] or [N] position (A/T), turn the ignition switch to "Start (III)", and release to ON (II).
The starter drive gear should disengage from the flywheel ring gear.

If the drive gear hangs up on the flywheel ring gear, check:

- Solenoid plunger and switch for malfunction.
- Drive gear assembly for dirt or damaged overrunning clutch.

Starter Cut Relay Test

1. Remove the glove box (see section 20).
2. Disconnect the 4P connector from the starter cut relay.
   (Wire colors of 4P connector: BLK/GRN, BLK/WHT, BLK/BLU and BLK/WHT)
3. Check continuity at the relay terminals.
   - There should be continuity between the C and D terminals.
   - There should be continuity between the A and B terminals when power and ground are connected to the C and D terminals.
   - There should be no continuity between the A and B terminals when power is disconnected.

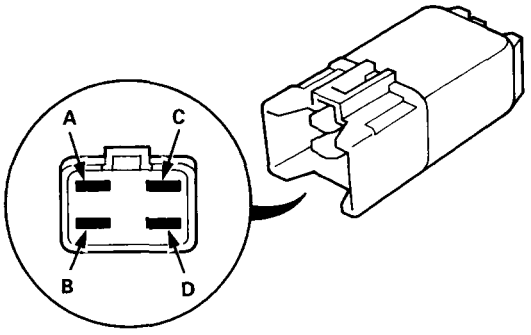

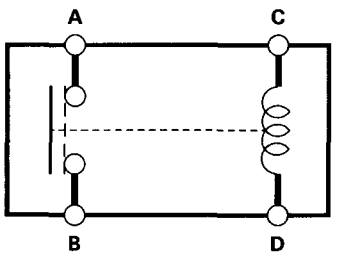

Clutch Interlock Switch Test (M/T)

1. Remove the dashboard lower cover, then disconnect the 2P connector from the switch.
2. Check for continuity between the terminals according to the table.

Terminal / Clutch Pedal	A	B
RELEASED		
PUSHED	○	○

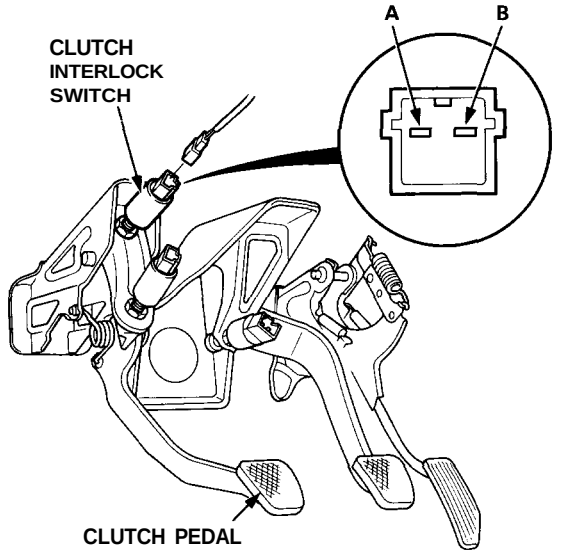

3. If necessary, replace the switch or adjust the switch position (see section 12).

Starter Solenoid Test

1. Check the hold-in coil for continuity between the S terminal and the armature housing (ground).
   The coil is OK if there is continuity.

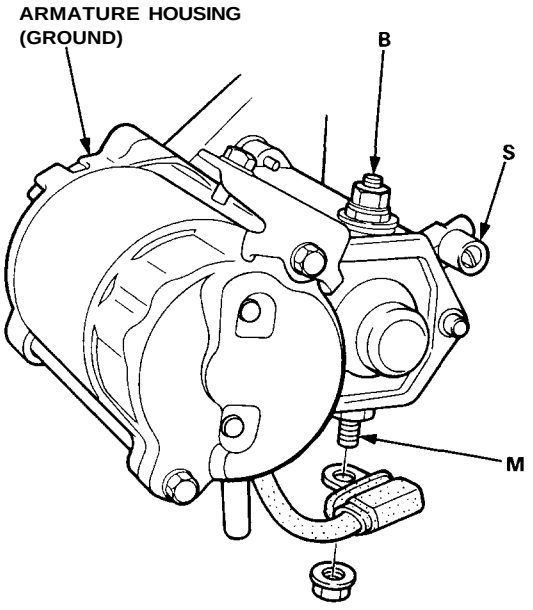

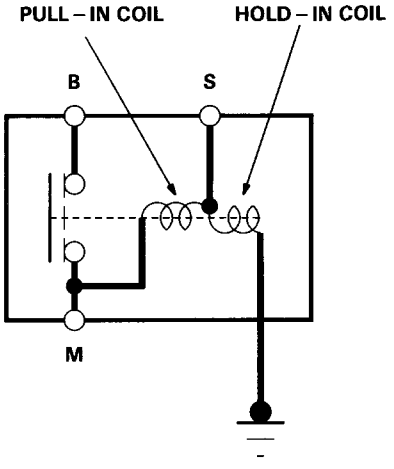

2. Check the pull-in coil for continuity between the S and M terminals.
   The coil is OK if there is continuity.

Starter Replacement

1. Disconnect the battery negative cable.
2. Remove the engine wire harness from the harness clip on the starter motor.
3. Disconnect the starter cable and the BLK/WHT wire.
4. Remove the two bolts holding the starter, and remove the starter.

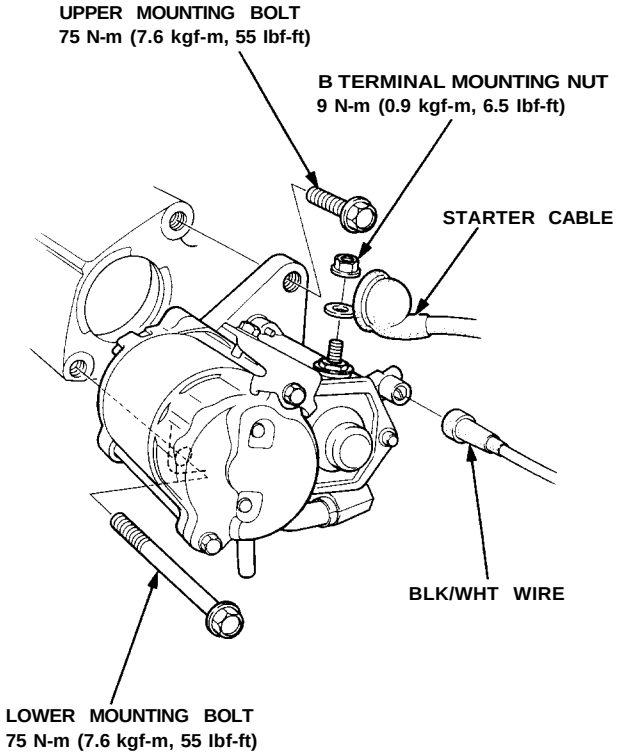

Starter Overhaul

CAUTION: Disconnect the ground cable from the battery before removing the starter.

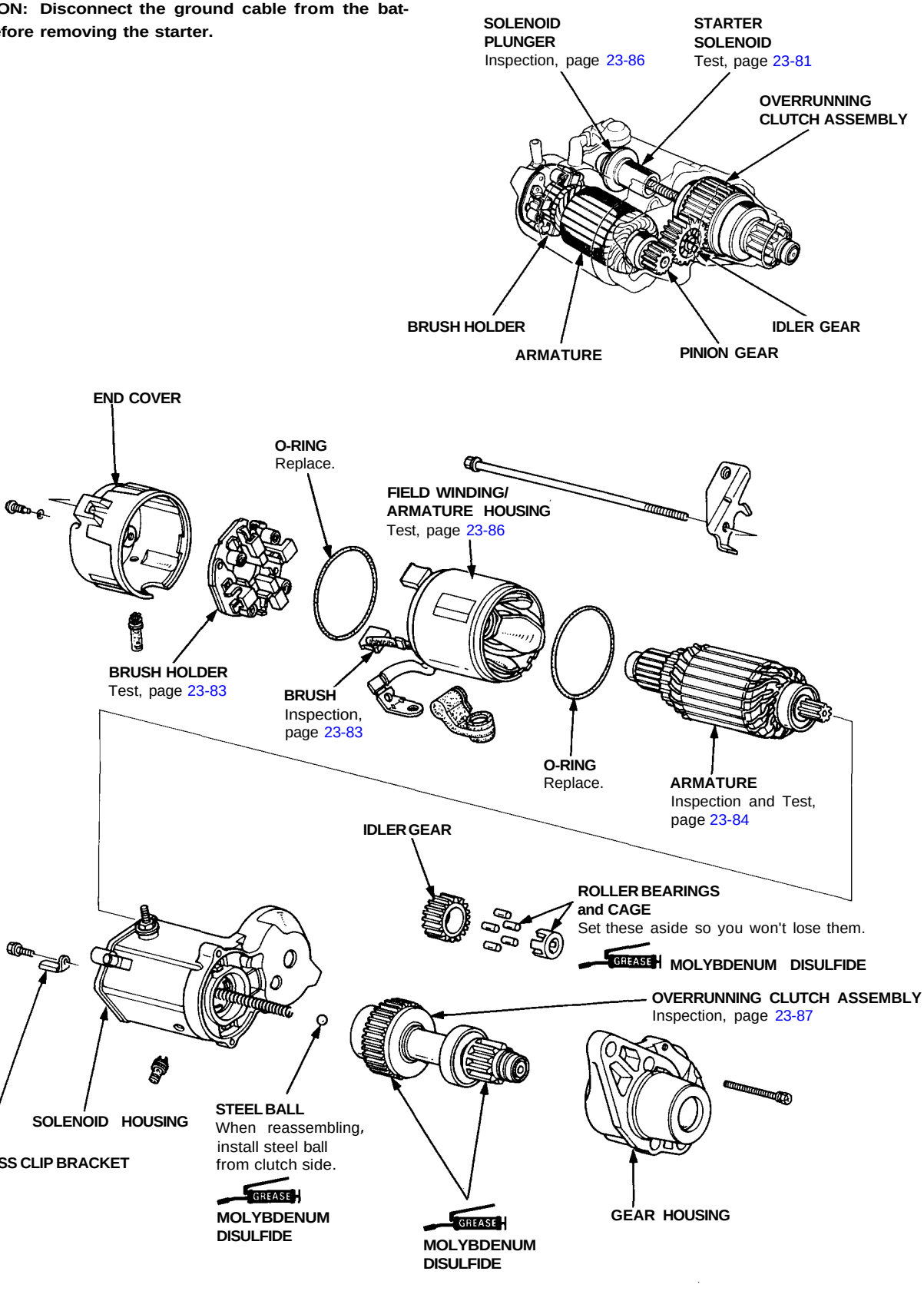

Starter Brush Holder Test

1. Check that there is no continuity between the ⊕ and ⊖ brush holders.
   If continuity exists, replace the brush holder assembly.

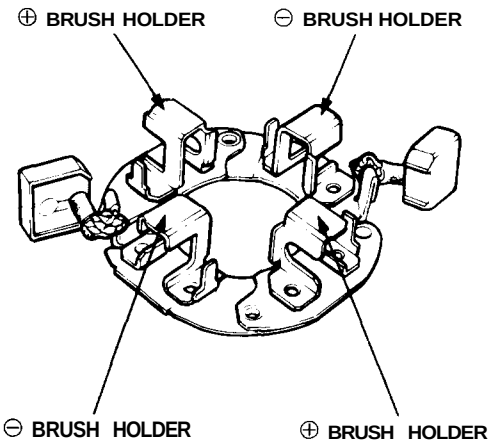

2. Insert the brush into the brush holder, and bring the brush into contact with the commutator, then attach a spring scale to the spring. Measure the spring tension at the moment the spring lifts off the brush.

Spring Tension:
18.0-24.0 N (1.80-2.40 kg, 4.0-5.3 lbs)

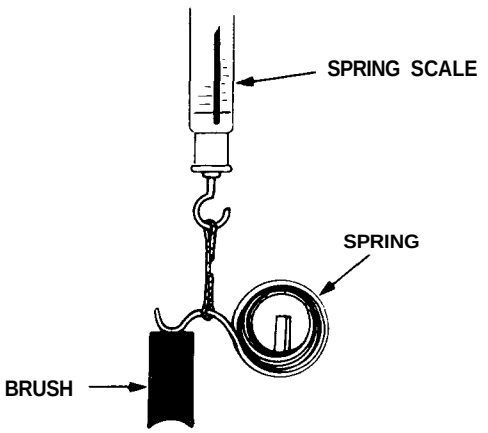

Starter Brush Inspection

Measure the brush length. If not within the service limit, replace the armature housing and brush holder assembly.

Brush Length

Standard (New): 15.0-15.5 mm (0.591-0.610 in)
Service Limit: 10.0 mm (0.394 in)

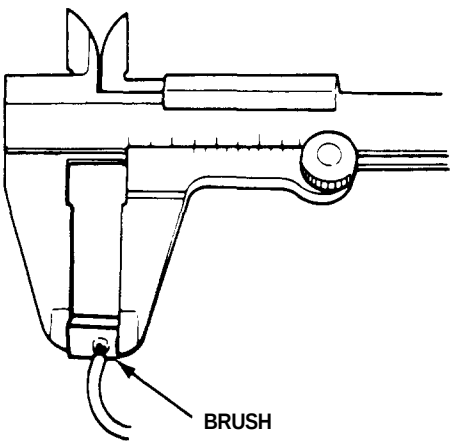

NOTE: To seat new brushes after installing them in their holders, slip a strip of #500 or #600 sandpaper, with the grit side up, over the commutator, and smoothly rotate the armature. The contact surface of the brushes will be sanded to the same contour as the commutator.

Armature Inspection and Test

1. Inspect the armature for wear or damage due to contact with the field coil magnets.

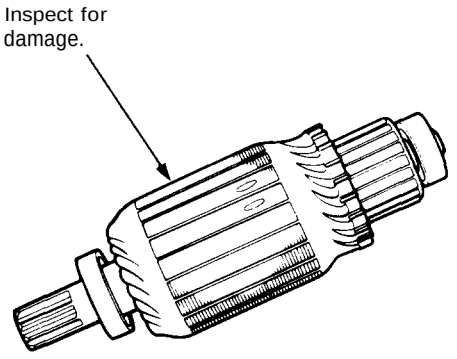

2. A dirty or burnt commutator surface may be resurfaced with emery cloth or a lathe within the following specifications.

Commutator Diameter

Standard (New): 29.9—30.0 mm (1.177-1.181in)
Service Limit: 29.0 mm (1.142 in)

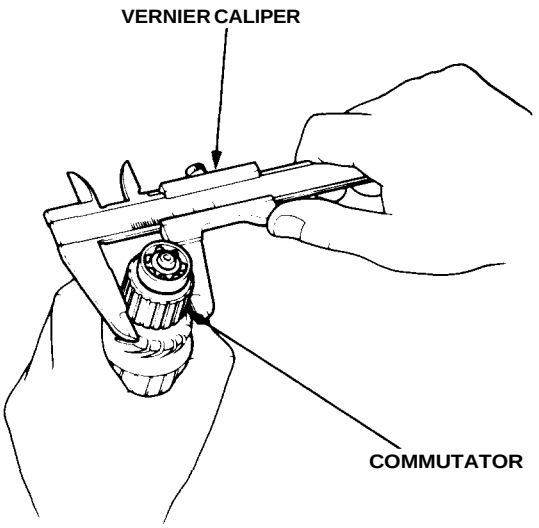

Commutator Runout

Standard (New): 0-0.02 mm (0-0.0008 in)
Service Limit: 0.05 mm (0.002 in)

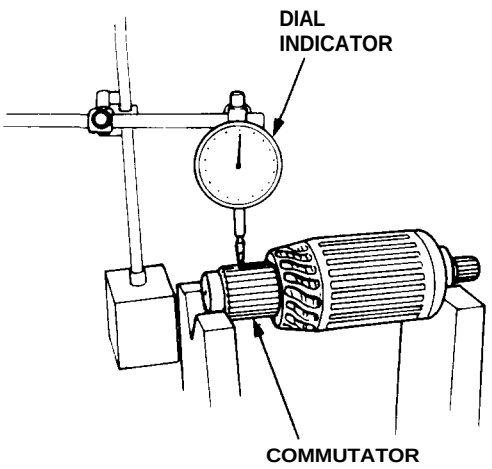

3. If the commutator runout and diameter are within limits, check the commutator for damage or for carbon dust or brass chips between the segments.

4. If the surface is dirty, recondition it with a #500 or #600 sandpaper. Then, check mica depth. If necessary, undercut mica with a hacksaw blade to achieve proper depth.

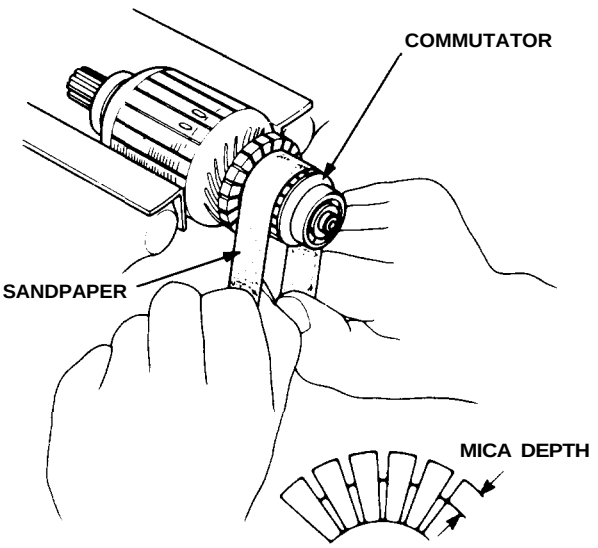

Commutator Mica Depth

Standard (New): 0.5-0.8 mm (0.02-0.03 in)
Service Limit: 0.2 mm (0.008 in)

5. Check for continuity between the segments of the commutator. If an open circuit exists between any segments, replace the armature.

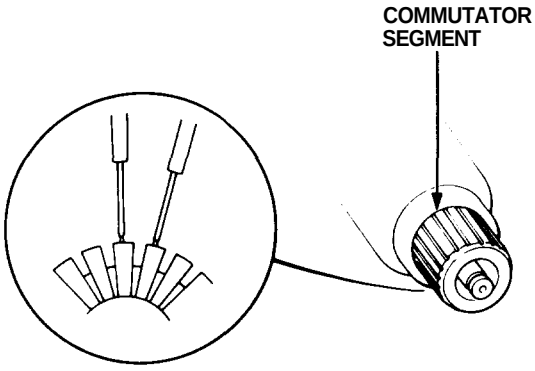

6. Place the armature on an armature tester. Hold a hacksaw blade on the armature core.

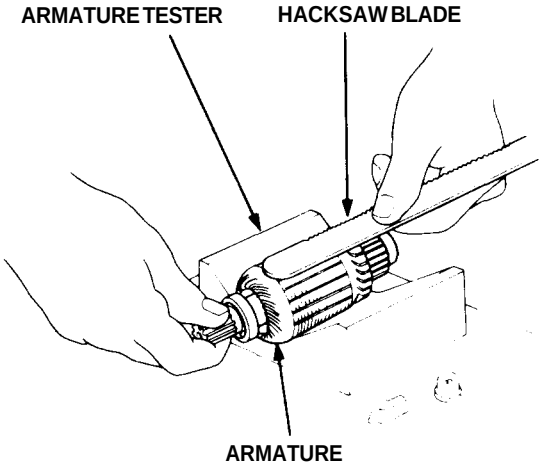

If the blade is attracted to the core or vibrates while the core is turned, the armature is shorted. Replace the armature.

7. With an ohmmeter, check that no continuity exists between the commutator and armature coil core, and between the commutator and armature shaft. If continuity exists, replace the armature.

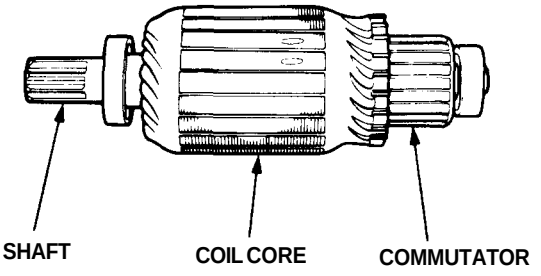

Solenoid Plunger Inspection

Check the contact points and face of the starter solenoid plunger for burning, pitting or any other defects. If surfaces are rough, recondition them with a strip of #500 or #600 sandpaper.

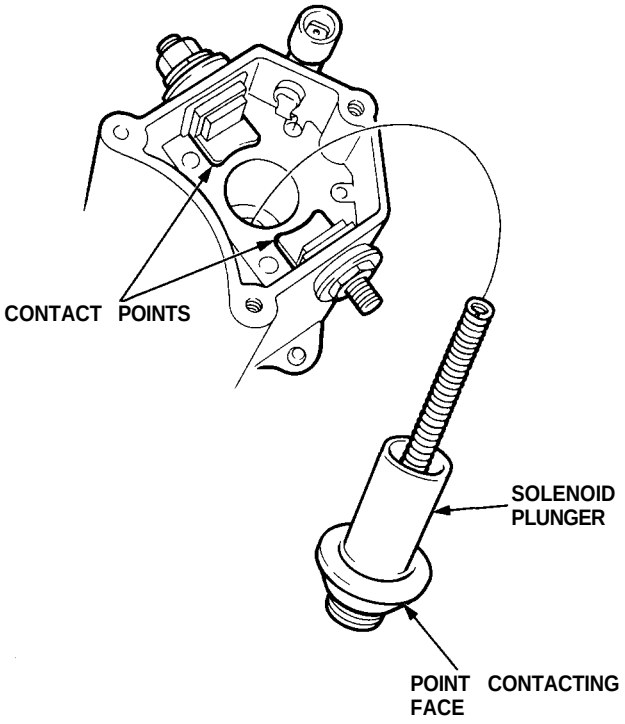

Starter Field Winding Test

1. Check for continuity between the brushes. If there's no continuity, replace the armature housing.

2. Check for continuity between each brush and the armature housing (ground).
   If continuity exists, replace the armature housing.

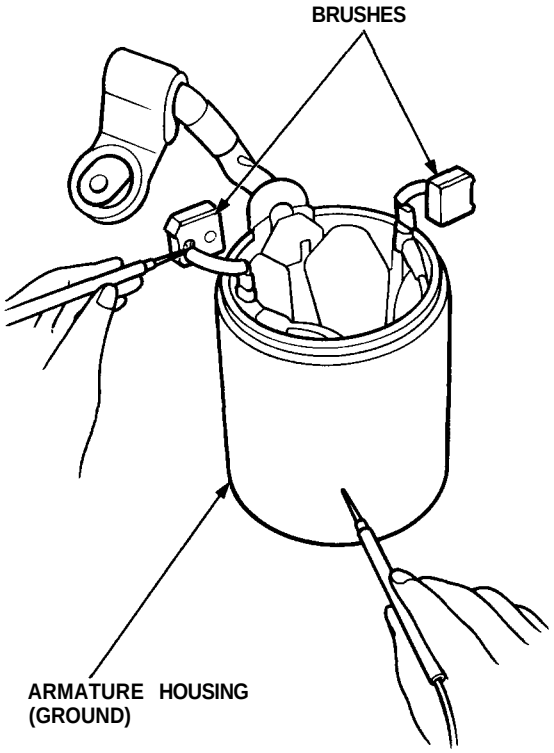

Overrunning Clutch Inspection

1. Check if the overrunning clutch moves along the shaft freely. If not, replace the overrunning clutch assembly.

2. Check if the overrunning clutch locks in one direction and rotates smoothly in reverse. If it does not lock in either direction or it locks in both directions, replace the overrunning clutch assembly.

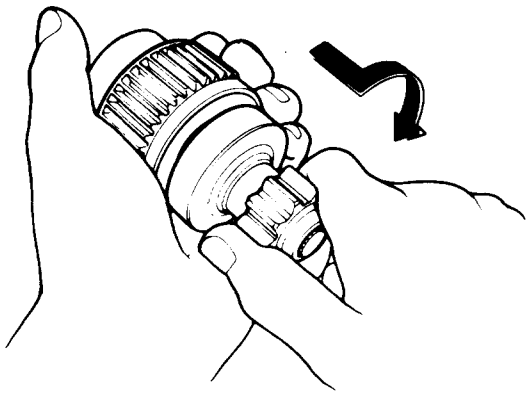

3. Check if the starter drive gear is worn or damaged. If the gear is worn or damaged, replace the overrunning clutch assembly; the gear is not available separately.

   NOTE: Check the condition of the flywheel or torque converter ring gear if the starter drive gear teeth are damaged.

Starter Reassembly

Reassemble the starter in the reverse order of disassembly.

1. Pry back each brush spring with a screwdriver, then position the brush about halfway out of its holder, and release the spring to hold it there.

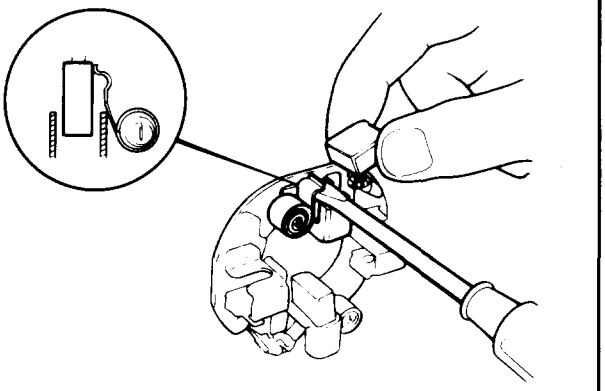

2. Install the armature in the housing. Next pry back each brush spring again, and push the brush down until it seats against the commutator. Then release the spring against the end of the brush.

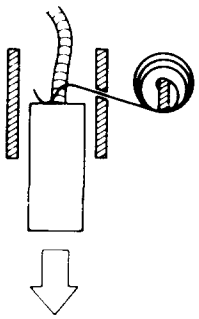

3. Install the end cover on the brush holder.

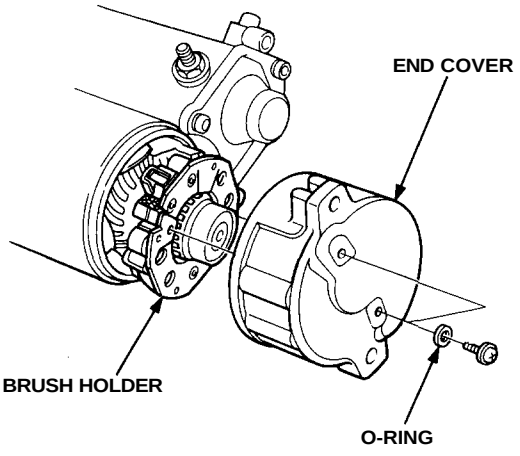

Component Location Index

IGNITION TIMING CONTROL SYSTEM
- Description, page 23-89
- Inspection, page 23-91
- Troubleshooting, section 11

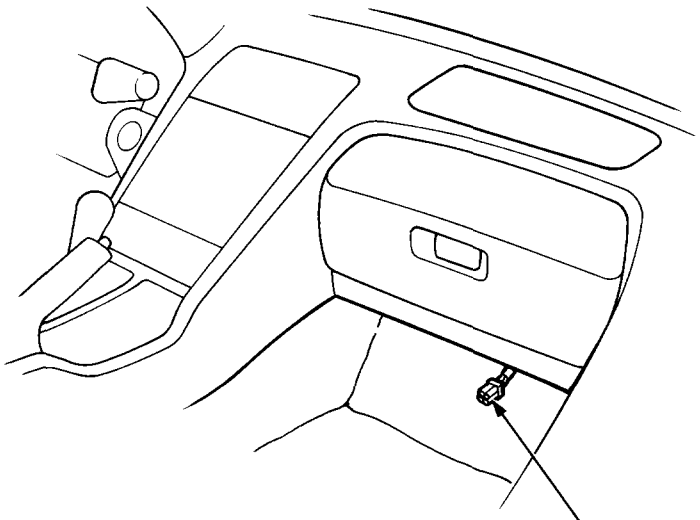

SERVICE CHECK CONNECTOR (2P) (Connector color: BLU)

SPARK PLUG (6)
Inspection, page 23-96

NOISE CONDENSER
Test, page 23-97

TEST TACHOMETER CONNECTOR

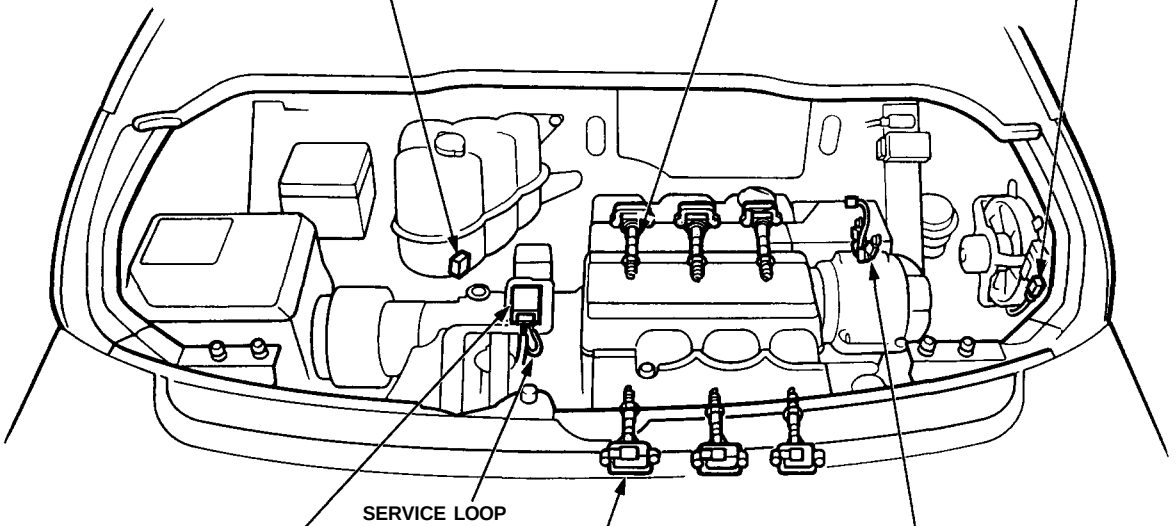

SERVICE LOOP

IGNITION CONTROL MODULE (ICM)
- Replacement, page 23-92
- Input Test, page 23-93
- Troubleshooting, section 11

IGNITION COIL (6)
- Removal, page 23-94
- Test, page 23-95

CRANKSHAFT POSITION/CYLINDER POSITION (CKP/CYP) SENSOR
- Troubleshooting, section 11
- Replacement, section 5

Description

Ignition Timing Control:
The programmed ignition used in this engine provides optimum control of ignition timing. A microcomputer determines the timing in response to engine speed and manifold vacuum pressure. The input signals are transmitted by the crankshaft position/cylinder position (CKP/CYP) sensor, throttle position (TP) sensor, ECT sensor, and MAP sensor. This system, not dependent on a governor or vacuum diaphragm, is capable of setting lead angles with complicated characteristics which cannot be provided by conventional governors or diaphragms.

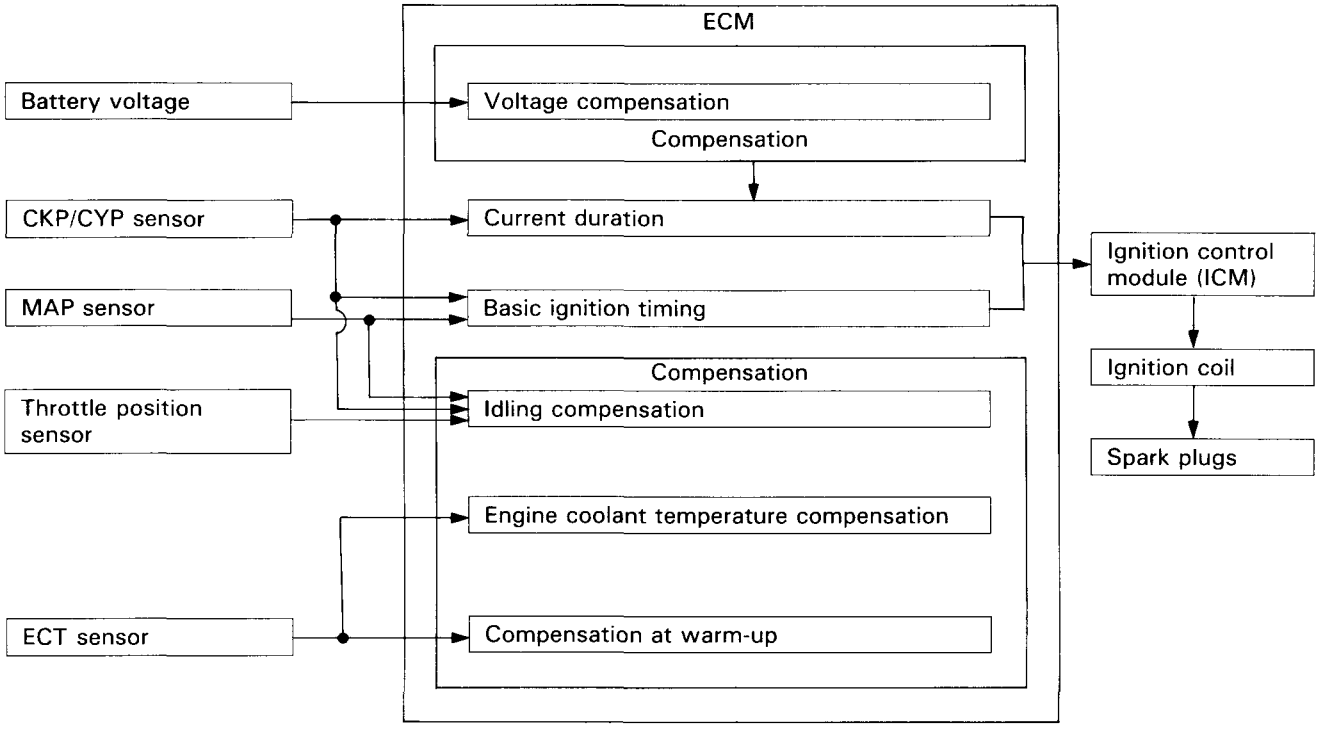

Basic Control
Determination of ignition timing/current duration:
The ECM has stored within it the optimum basic ignition timing for operating conditions based upon engine speed and intake manifold pressure. With compensation by signals from sensors, the system determines optimum timing for ambient conditions and sends voltage pulses to the ICM.

Compensation of Ignition Timing:

Compensation Item	Related Sensor and Information	Description
Idling	CKP/CYP sensor, MAP sensor	Ignition timing is controlled to the target speed with compensation according to the idling speed.
Compensation at warm-up	Engine coolant temperature (ECT) sensor	Lag angle is adjusted according to warm-up conditions to bring about a good balance between operating performance and exhaust gas level.
Engine coolant temperature compensation	ECT sensor	Compensation for lead angle at low coolant temperature and lag angle at high coolant temperature.

Control at Start
Ignition timing is fixed at 5° BTDC for cranking. The cranking is detected by the CYP sensor (cranking rpm) and starter signal.

Misfiring Detection
As part of the OBD II misfiring detection system, each of the ignition coils has a built-in spark plug voltage sensor. This sensor detects the long duration high voltage which occurs in case of unfavorable combustion or misfiring. (For details, see section 11.)

Ignition Timing Inspection

SRS components are located in this area. Review the SRS component locations, precautions, and procedures in the SRS (section 24) before performing repairs or service.

1. Pull out the service check connector located under the middle of the dash. Connect the BLU and BRN/BLK terminals with the SCS service connector.

2. Start the engine. Hold the engine at 3,000 rpm with no load (A/T in N or P position, M/T in neutral) until the radiator fan comes on, then let it idle.

   NOTE: If you stop the engine or turn the ignition switch OFF after warm-up with the SCS service connector connected, the engine will idle at the base idle speed. That is, it will not be controlled by the ECM. To return to the normal idle speed, press the acclerator pedal one time.

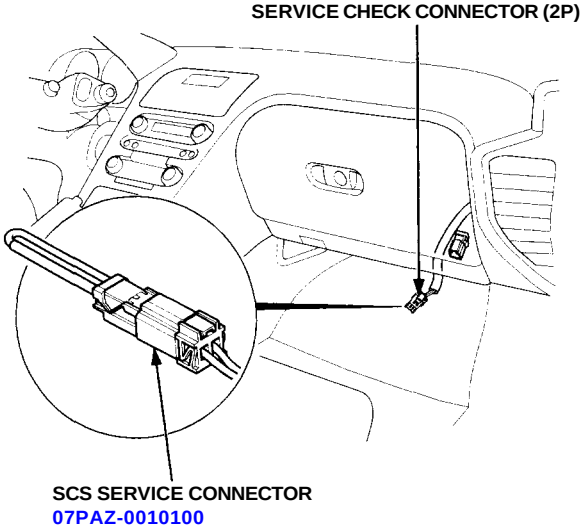

3. Check the idle speed (see page 23-92).

4. Connect a timing light to the service loop; while the engine idles, point the light toward the pointer on the timing belt cover.

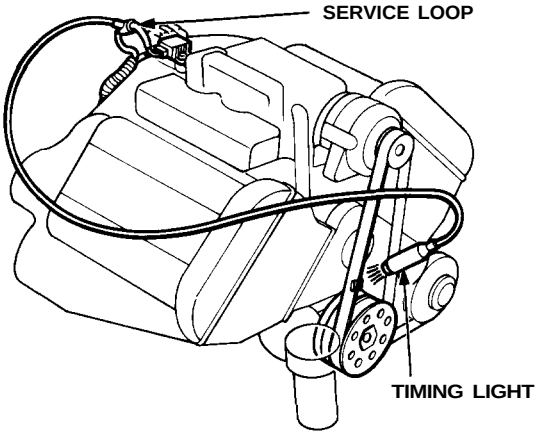

5. Check the ignition timing with all electrical systems are turned OFF.

Ignition Timing: 15° ± 2° BTDC (RED mark) at Idle Speed (rpm):

M/T	A/T
800 ± 50 (In neutral)	780 ± 50 (In N or P)

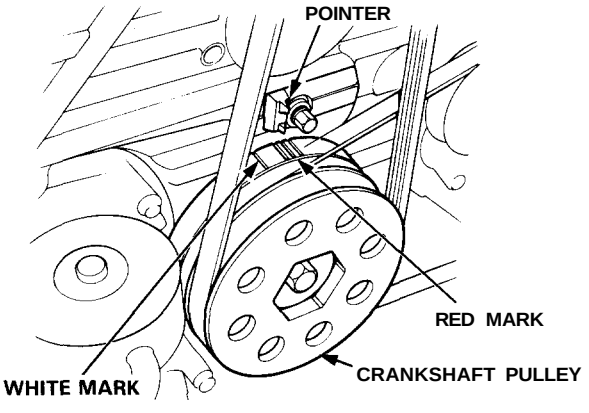

6. If the ignition timing is out of spec, replace the ECM.

7. Remove the SCS service connector from the service check connector.

Idle Speed Inspection

1. Start the engine. Hold the engine at 3,000 rpm with no load (A/T in N or P position, M/T in neutral) until the radiator fan comes on, then let it idle.
2. Connect a tachometer to the test tachometer connector.

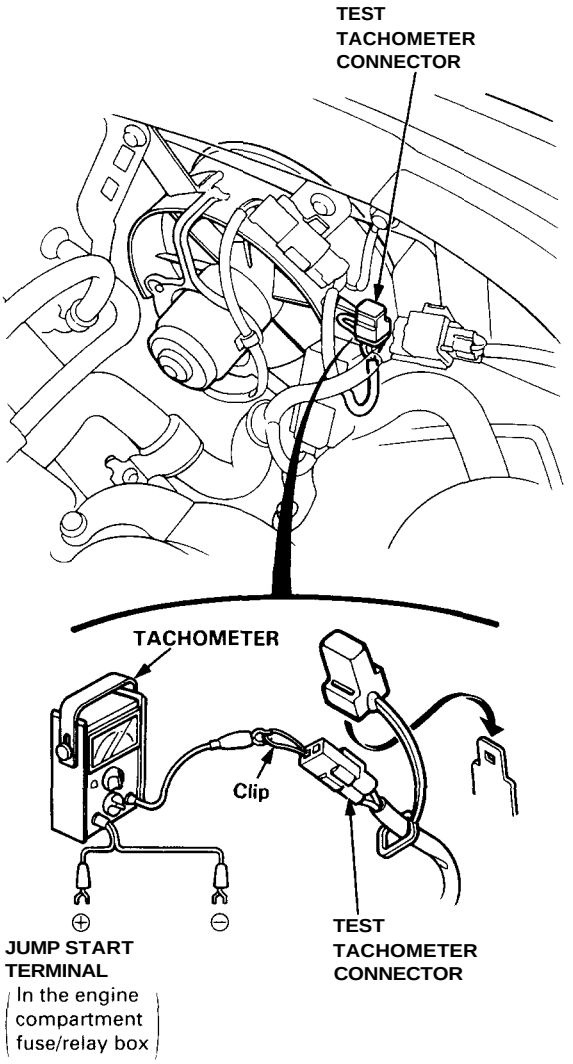

3. Check the idle speed with all electrical systems turned OFF.

Idle Speed (rpm):

M/T	A/T
800 ± 50 (In neutral)	780 ± 50 (In N or P)

4. Adjust the idle speed if necessary (see section 11).

Ignition Control Module (ICM) Replacement

1. Disconnect the 8P and 6P connectors from the ignition control module (ICM).
2. Remove the two mounting bolts, and slide the ICM out toward the front side. Be careful not to damage the vacuum hoses when removing the ICM.

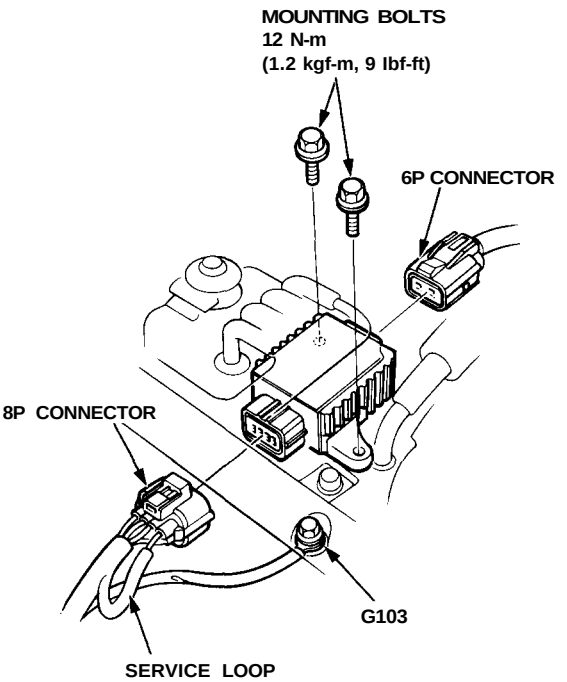

Ignition Control Module (ICM) Input Test

Disconnect the 8P connector from the ignition control module (ICM).

Inspect the connector and socket terminals to be sure they are all making good contact.

- If the terminals are bent, loose, or corroded, repair them as necessary, and recheck the system.
- If the terminals look OK, make the following input tests at the connector.

— If any test indicates a problem, find and correct the cause, then recheck the system.

— If all the input tests prove OK, the ICM must be faulty; replace it.

NOTE:

- The tachometer should operate normally.
- See section 11 when the malfunction indicator lamp (MIL) blinks.
- If necessary, perform an input test on the ICM after finishing the fundamental tests for the ignition system and fuel and emission systems.

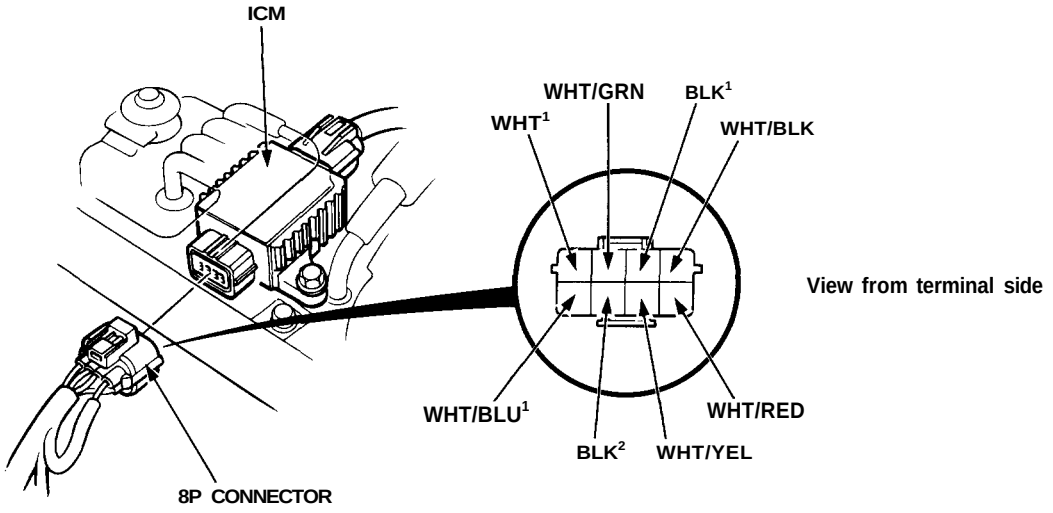

No.	Wire	Test condition	Test: Desired result	Possible cause if result is not obtained
1	BLK[1]	Under all conditions	Check for continuity to ground: There should be continuity.	• Poor ground (G103) • An open in the wire
2	BLK[2]			
3	WHT[1]	Ignition switch "ON (ID"	Check for voltage to ground: There should be battery voltage.	• Blown No. 13 (30 A) fuse in the engine compartment fuse/relay box • Faulty ignition coil • An open in the wire
4	WHT/GRN			
5	WHT/BLK			
6	WHT/BLU[1]			
7	WHT/YEL			
8	WHT/RED			

Ignition System

Ignition Coils/Spark Plugs Removal

CAUTION:
Ignition coils and spark plugs can become very hot in use; do not touch them until the engine has cooled down.

1. Remove the ignition coil covers.
2. Disconnect the 3P connectors from the ignition coils.
3. Remove the ignition coils.
4. Remove the spark plugs.

NOTE: Different ignition coils and ignition coil covers are used for the front and rear cylinders. Be sure to use the correct ones when mounting them.

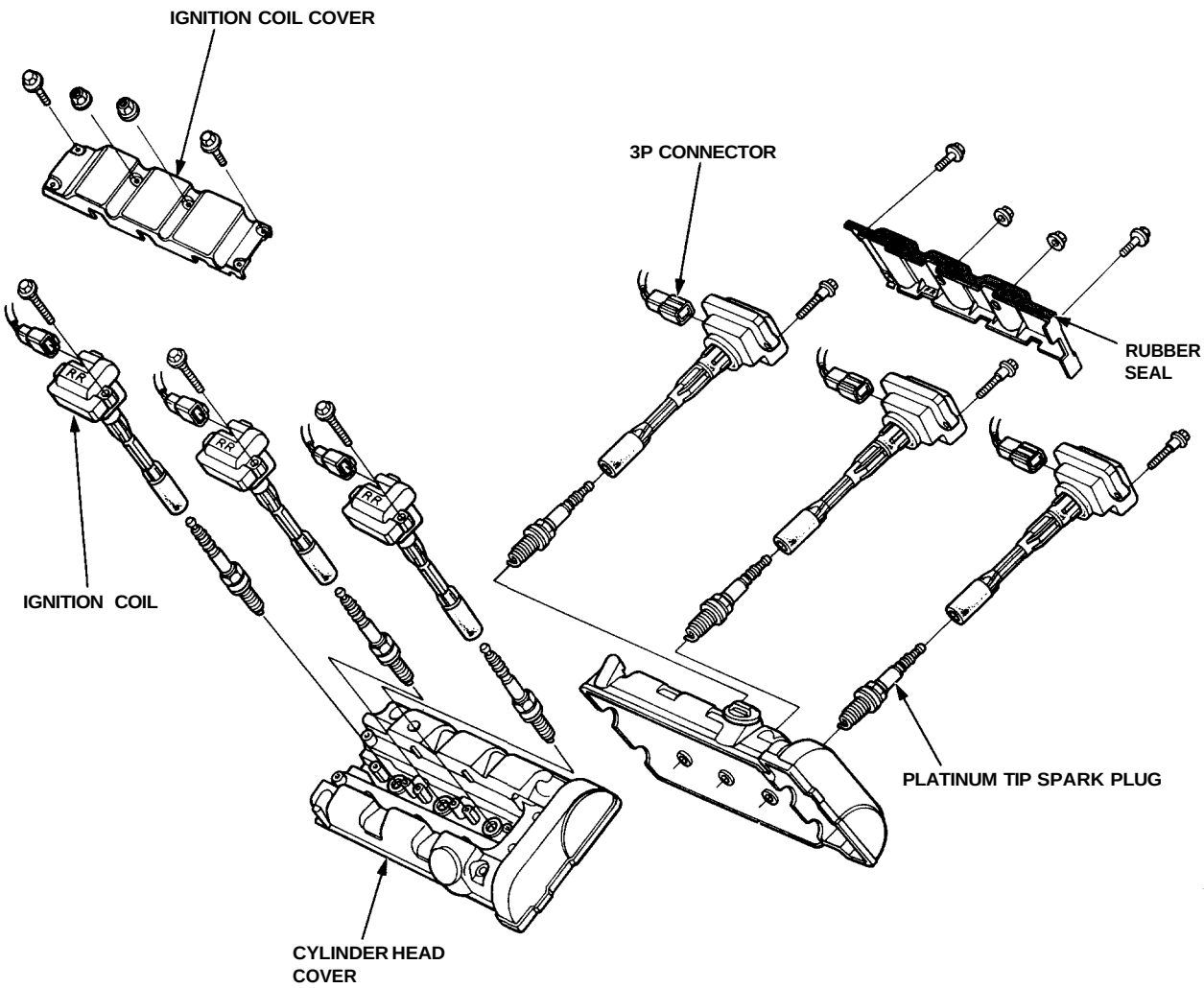

Ignition Coil Test

1. With the ignition switch OFF, remove the ignition coil.

2. Using an ohmmeter, measure resistance between the terminals. Replace the coil if the resistance is not within specifications.

   NOTE: Resistance will vary with the coil temperature; specification is at 77°F (25°C).

   Primary Winding Resistance
   (Between the A and B terminals): 0.9 - 1.1 ohms

3. If primary winding resistance is OK, substitute a known-good ignition coil, and check the system operation.
   If the system is normal, replace the original ignition coil.

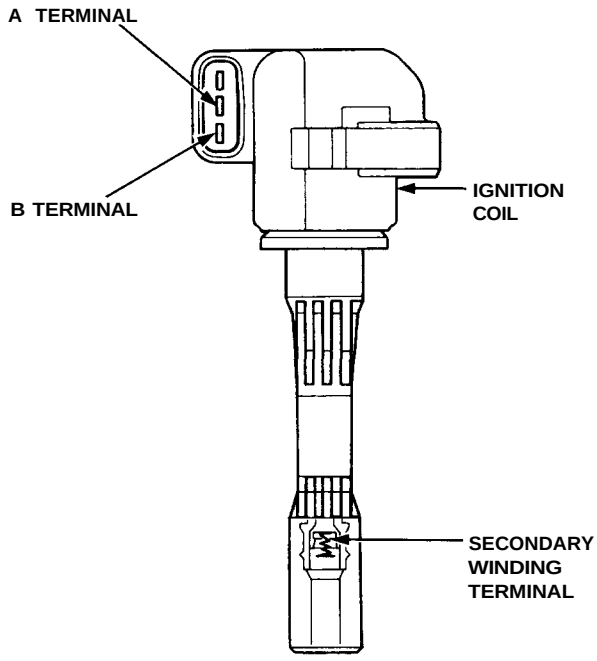

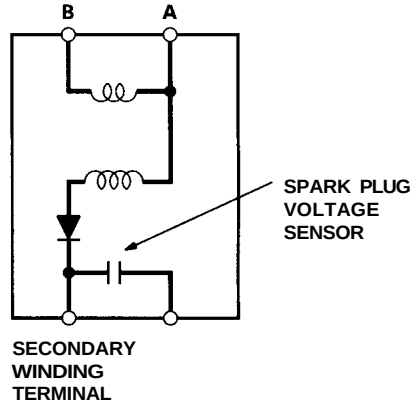

Spark Plug Inspection

1. Inspect the electrodes and ceramic insulator for:

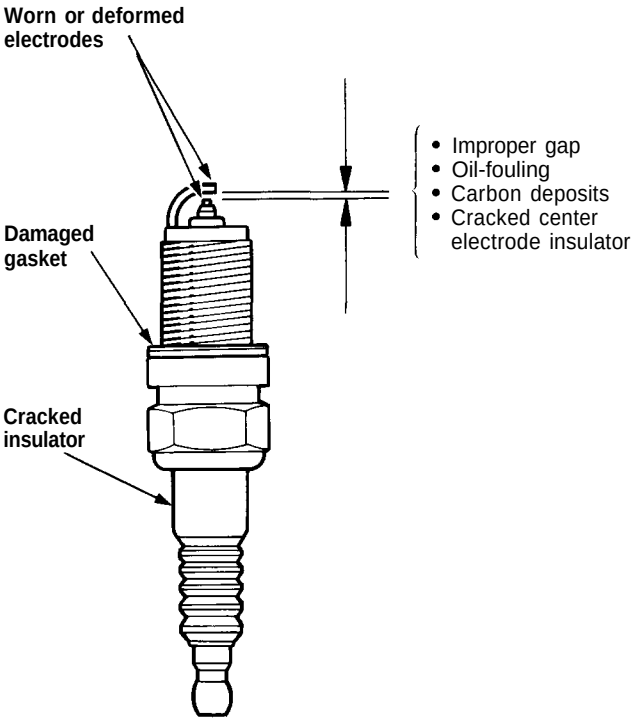

Burned or worn electrodes may be caused by:
- Advanced ignition timing
- Loose spark plug
- Plug heat range too hot
- Insufficient cooling

Fouled plug may be caused by:
- Retarded ignition timing
- Oil in combustion chamber
- Incorrect spark plug gap
- Plug heat range too cold
- Excessive idling/low speed running
- Clogged air cleaner element
- Deteriorated ignition coil

2. Replace the plug if it is fouled or worn. Do not use spark plugs other than those listed below.

Spark Plug:
PFR6L-11 (NGK)
PK20PR-L11 (DENSO)

3. Make sure that the 1.3 mm (0.051 in) plug gauge does not go into the gap for the platinum tip plug. If the gauge goes into the gap, do not attempt to adjust the side electrode; replace the plug with a new one.

Electrode Gap:

Standard	1.1 $^{+0}_{-0.1}$ mm (0.043 $^{+0}_{-0.004}$ in)
Service Limit	1.3 mm (0.051 in)

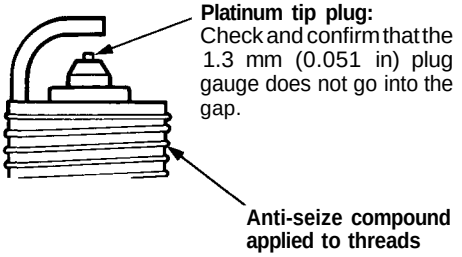

4. Apply a small quantity of anti-seize compound to the plug threads before installing each plug. Screw the plugs into the cylinder head finger-tight, then torque them to 18 N-m (1.8 kgf-m, 13 lbf-ft).

Noise Condenser Capacity Test

1. Use a commercially available condenser tester. Connect the tester probes, and measure the condenser capacity.

   Condenser capacity: 0.47 ±0.09 microfarads (μF)

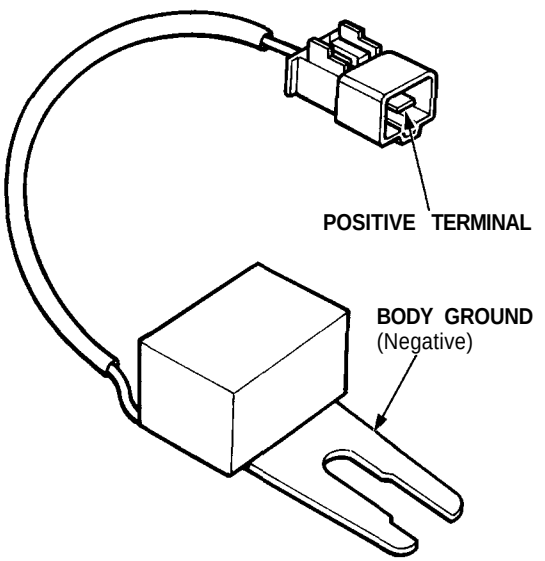

   NOTE: The noise condenser is intended to reduce ignition noise. However, condenser failure may cause the engine to stop running.

2. If not within the specifications, replace the noise condenser.

Component Location Index

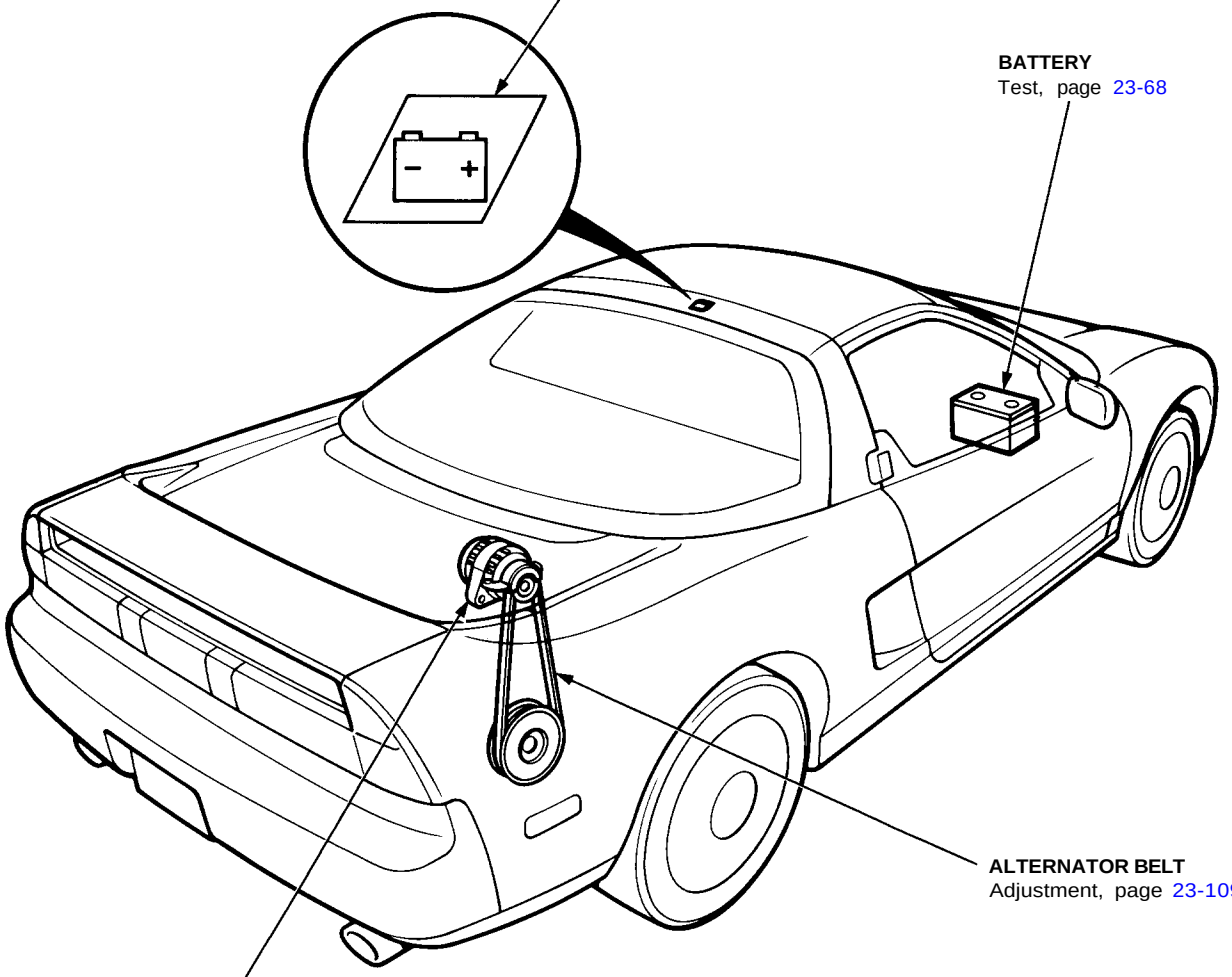

CHARGING SYSTEM LIGHT
(Built into the gauge assembly)
Test, page 23-100

BATTERY
Test, page 23-68

ALTERNATOR BELT
Adjustment, page 23-109

ALTERNATOR
- Alternator and Regulator Test, page 23-102
- Replacement, page 23-105
- Overhaul, page 23-106

Troubleshooting

If the charging system light is on, or the battery is dead or low, test the following items in the order listed:

1. Battery (see page 23-68)
2. Charging System Light
3. Alternator/Regulator

Charging System Light Test

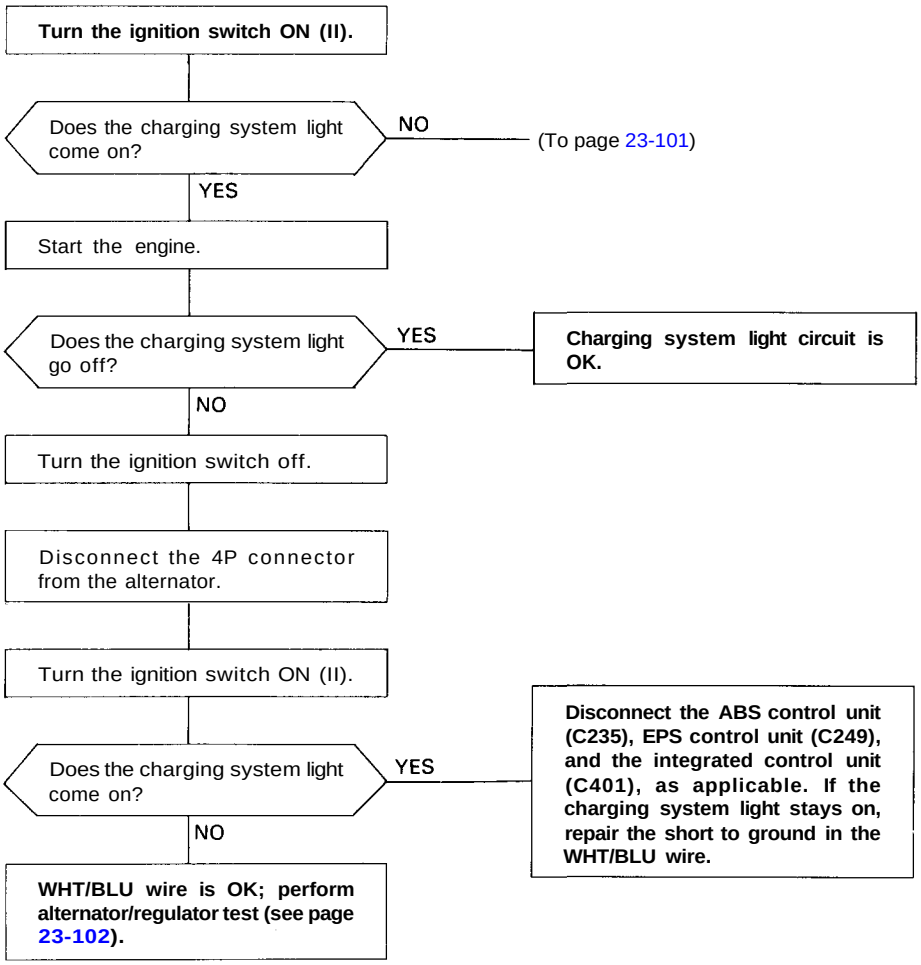

(From page 23-100)

Turn the ignition switch off.

Check fuse No. 2 (15 A).

Is the fuse OK?

NO → **Replace the fuse.**

YES

Disconnect the 4P connector from the alternator.

Turn the ignition switch ON (II).

Check for voltage in the YEL wire at the IG terminal of the 4P connector.

Is there battery voltage?

NO → **Repair open in the YEL wire.**

YES

Ground the WHT/BLU wire at the L terminal of the 4P connector.

Does the charging system light come on?

NO → **Check for a blown charging system light bulb. If the bulb is OK, repair open in the WHT/BLU wire.**

YES

Perform alternator/regulator test (see page 23-102).

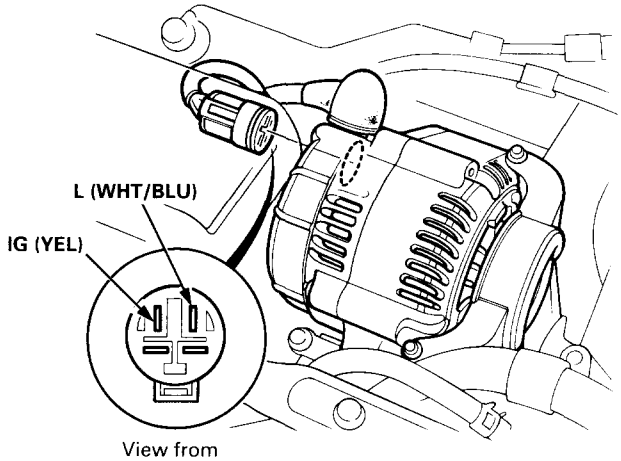

View from terminal side

(cont'd)

Troubleshooting (cont'd)

Alternator/Regulator Test

Use the SUN VAT-40 (or equivalent) tester.

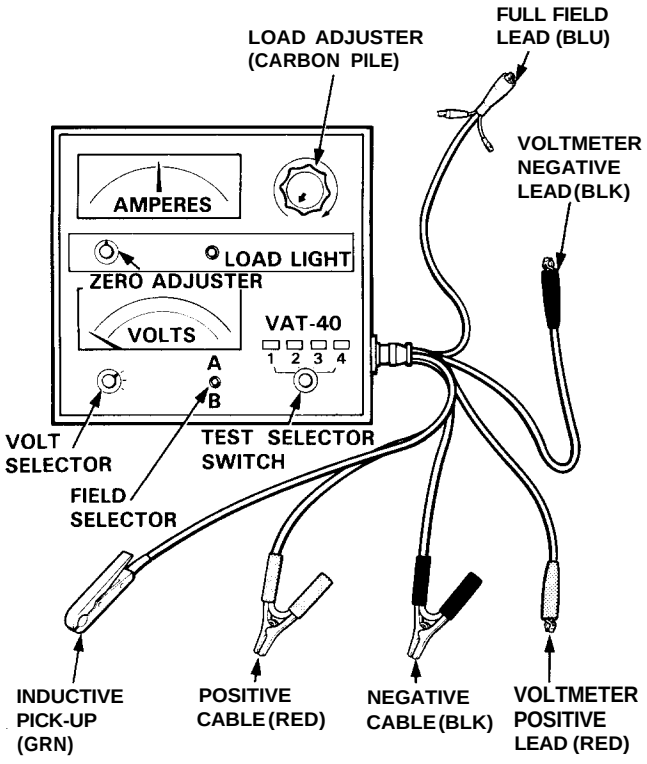

1. Attach the positive tester cable and the voltmeter positive lead to the jump start terminal in the engine compartment fuse/relay box.

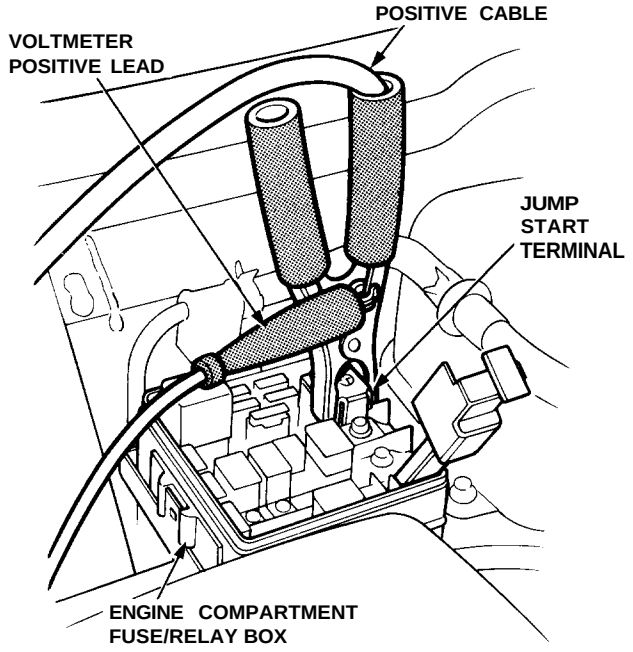

2. Attach the negative tester cable and the voltmeter negative lead to the top of the intake manifold.

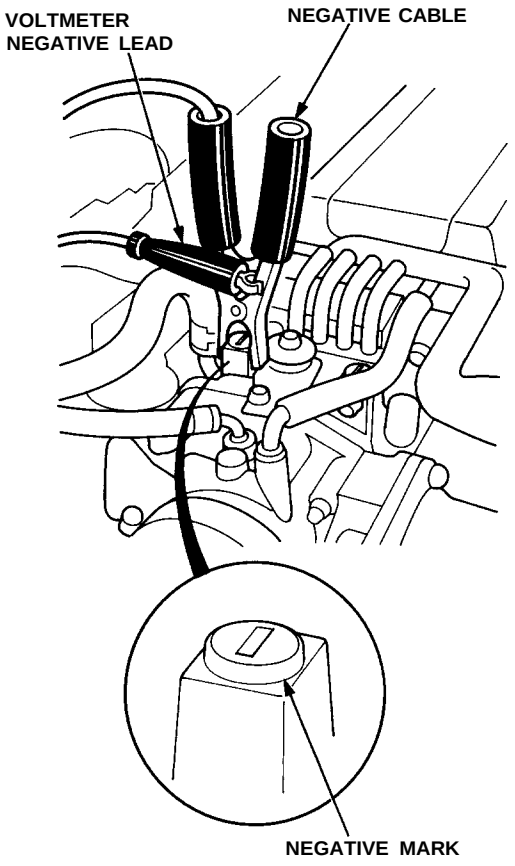

3. Attach the inductive pick-up to the B terminal wire of the alternator with its arrow pointing away from the terminal.

   NOTE: The arrow must point away from the B terminal.

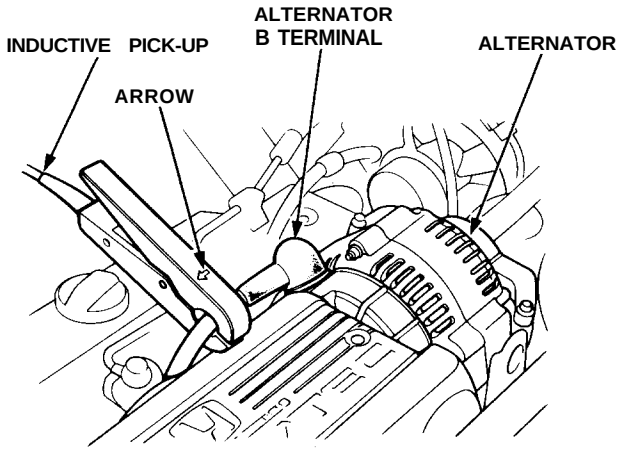

NOTE: Be sure the battery is sufficiently charged (see page 23-68).

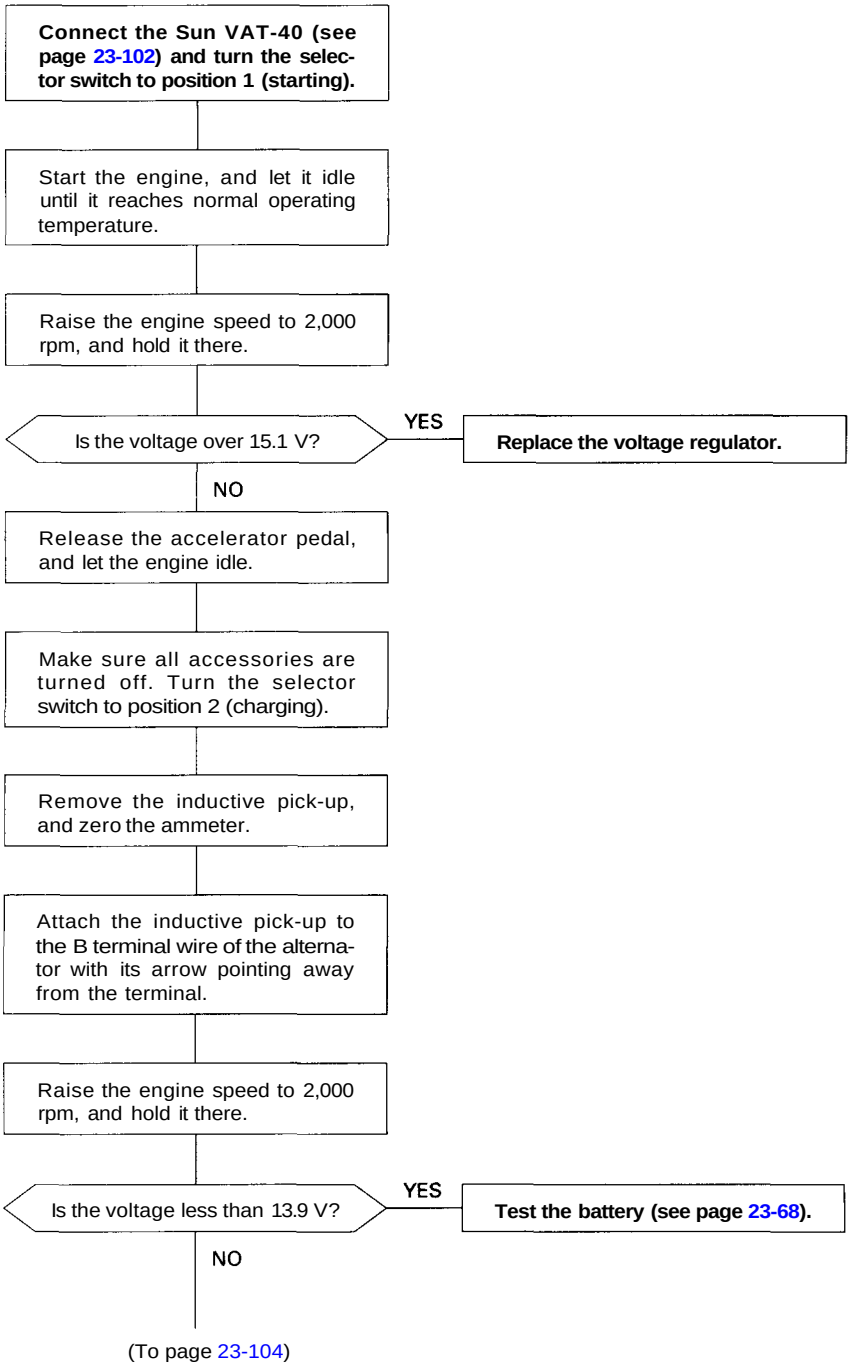

(cont'd)

Troubleshooting (cont'd)

(From page 23-103)

Apply a load with the VAT-40 until the battery voltage drops to between 12-13.5 V.

Is the amperage 85 A or more? YES → **Charging system is OK.**

NO

With the engine speed still at 2,000 rpm, full-field the alternator.

NOTE: Attach a probe to the VAT-40 full-field test lead, and insert the probe into the full-field access hole at the back of the alternator. Switch the field selector to "A (Ground)" position momentarily, and check the amperage reading.

CAUTION: The voltage will rise quickly when the alternator is full-fielded. Do not let it exceed 18V or you may damage the electrical system.

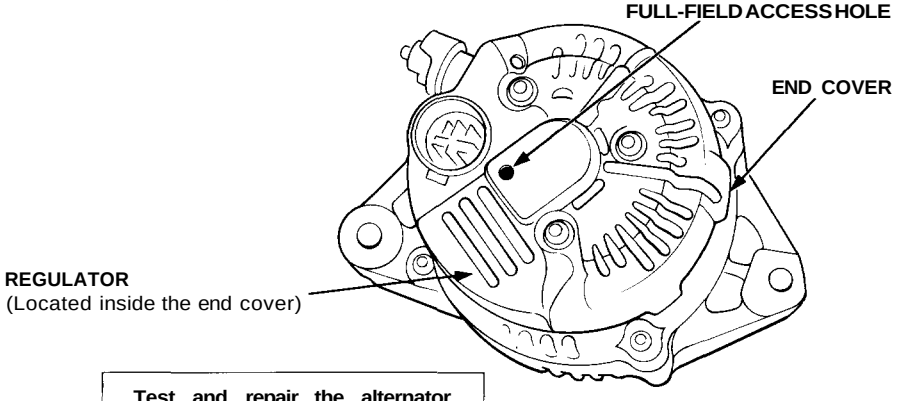

Is the alternator output 85 A or more? NO → **Test and repair the alternator (see page 23-107).**

YES

Turn the ignition switch off.

Disconnect the 4-P connector from the alternator.

Turn the ignition switch ON (II).

Check for voltage in the YEL wire at the IG terminal and in the WHT/GRN wire at the S terminal of the 4-P connector.

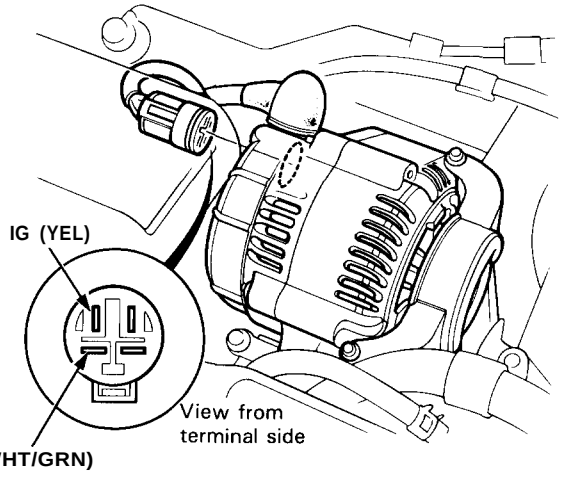

Is there battery voltage in both wires? NO → **Repair open in the YEL wire or the WHT/GRN wire.**

YES

Replace the voltage regulator.

Alternator Replacement

1. Disconnect the negative cable from the battery.
2. Disconnect the 4P connector from the alternator.
3. Remove the nut and the BLK wire from the B terminal.

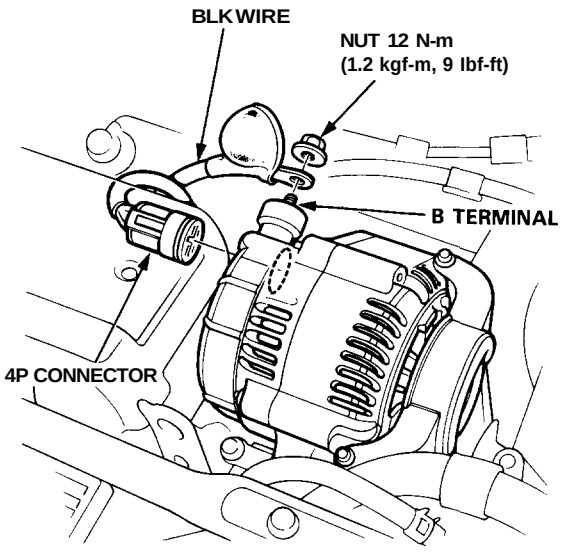

4. Remove the pulley cover from the alternator.

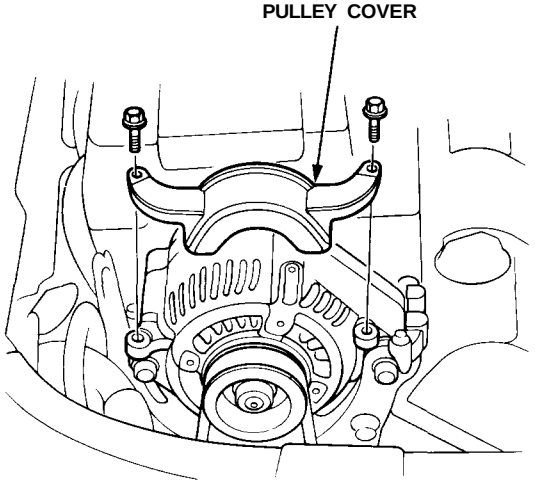

5. Remove the nut from the adjustment-lock bolt, loosen the mounting bolt and the adjusting bolt, then remove the belt from the pulley.

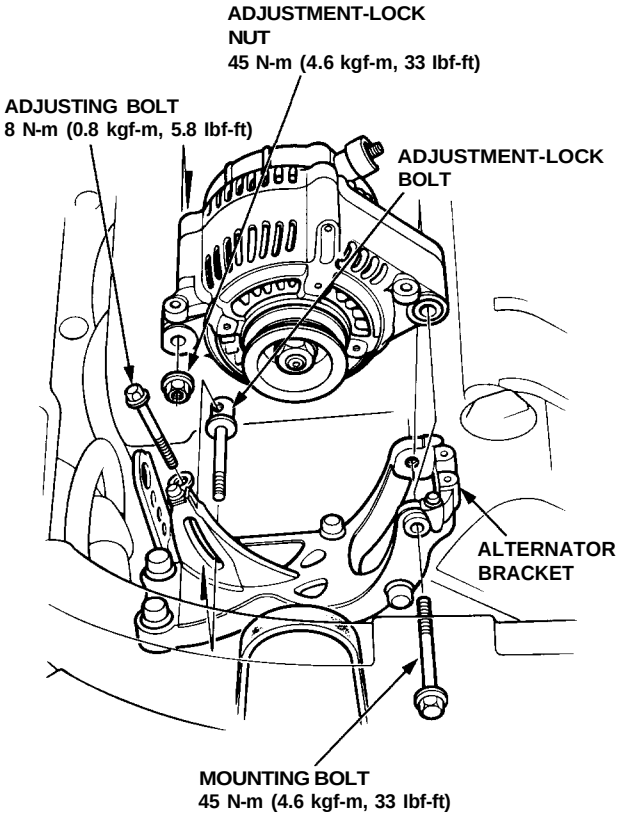

6. Remove the adjusting bolt, adjustment-lock bolt and the mounting bolt, then remove the alternator from the bracket.
7. Install the alternator in the reverse order of removal.
8. Adjust the alternator belt tension after installing the alternator (see page 23-109).

Alternator Overhaul

NOTE: It is only necessary to separate the pulley, drive end housing and rotor when the front bearing needs replacement.

Loosen the locknut with 10 mm and 22 mm wrenches to remove the pulley from the rotor. If necessary, use an impact wrench.

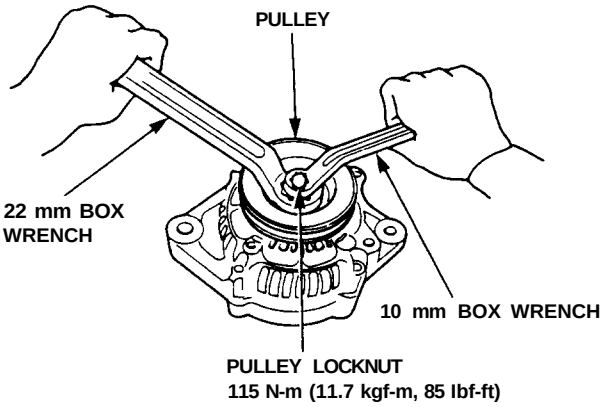

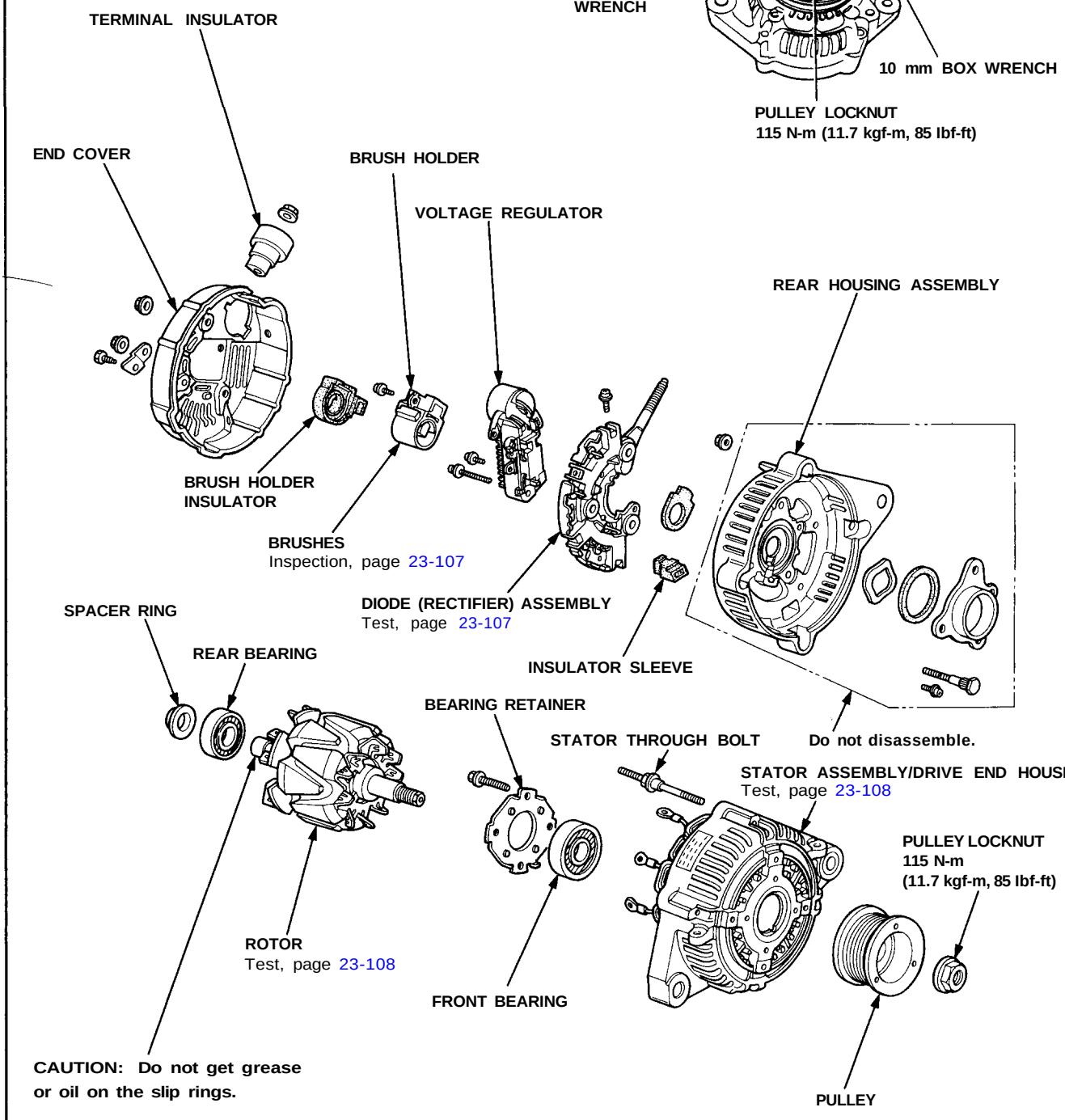

Rectifier Test

NOTE: The diodes are designed to allow current to pass in one direction while blocking it in the opposite direction. Since the alternator rectifier is made up of eight diodes (four pairs), each diode must be tested for continuity in both directions with an ohmmeter that has diode checking capability; a total of sixteen checks.

1. Check for continuity in each direction, between the B and P, and between the E (ground) and P terminals of each diode pair. All diodes should have continuity in only one direction.

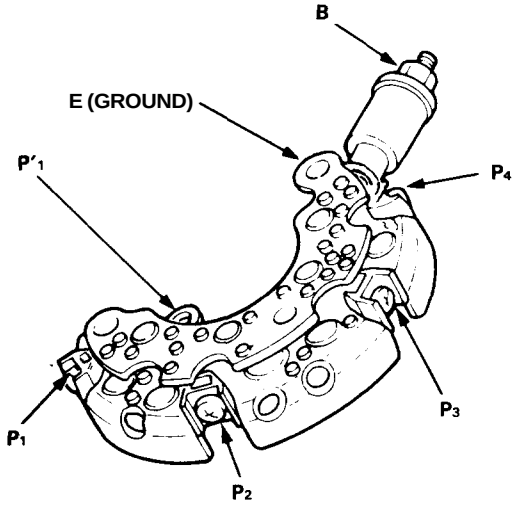

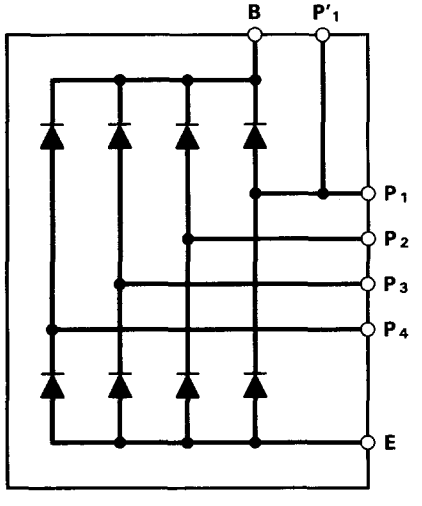

2. If any of the eight diodes fails, replace the rectifier assembly. (Diodes are not available separately.)

Alternator Brush Inspection

1. Remove the end cover, then take out the brush holder by removing its two screws.

2. Measure the length of the brushes with a vernier caliper.

Alternator Brush Length:
Standard: 10.5 mm (0.41 in)
Service Limit: 3.5 mm (0.14 in)

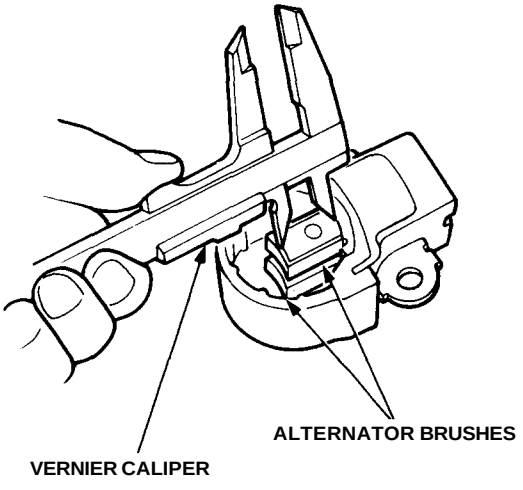

If the brushes are less than the service limit, replace the assembly.

Rotor Slip Ring Test

1. Check that there is continuity between the slip rings.
2. Check that there is no continuity between the slip rings and the rotor or rotor shaft.

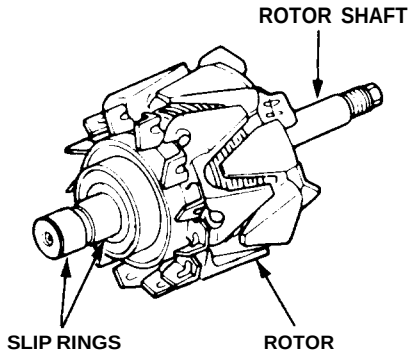

3. If the rotor fails either continuity check, replace the alternator.

Stator Test

1. Check that there is continuity between each pair of leads.
2. Check that there is no continuity between each lead and the coil core.

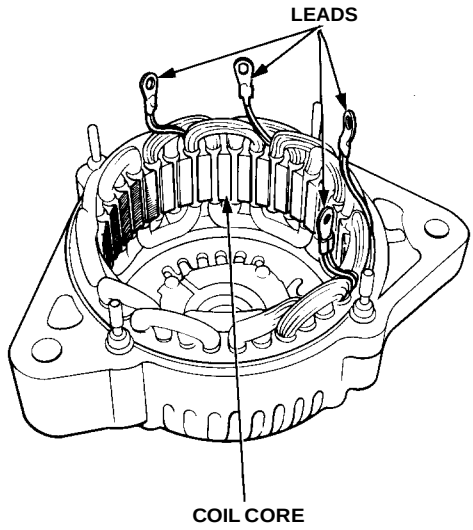

3. If the coil fails either continuity check, replace the alternator.

Alternator Belt Adjustment

Deflection Method:

1. Apply a force of 98 N (10 kgf, 22 lbf) between the alternator and crankshaft pulley, and measure its deflection.

   Deflection: 11-13.5 mm (0.43-0.53 in)

   NOTE: On a brand-new belt, the deflection should be 6-8 mm (0.24-0.31 in) before the belt has had any running time on the engine.

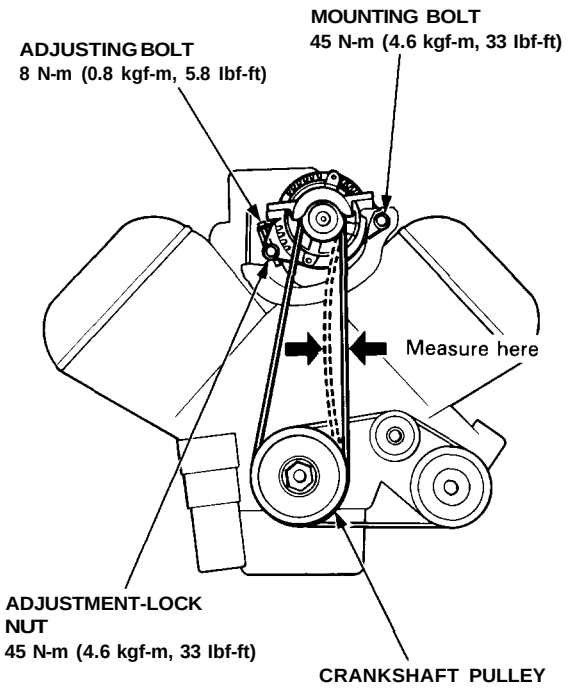

2. If belt deflection is incorrect, loosen the adjustment-lock nut and the mounting bolt.
3. Turn the adjusting bolt until belt deflection is correct, then retighten the nut and bolt.
4. Recheck the belt tension.

Tension Gauge Method:

1. Attach the belt tension gauge to the belt, and measure belt tension.

   Tension: 450 - 650 N (45 - 65 kgf, 99-143 lbf)

   NOTE: On a brand-new belt, the tension should be 900 - 1100 N (90 - 110 kgf, 198 - 243 lbf) before the belt has had any running time on the engine.

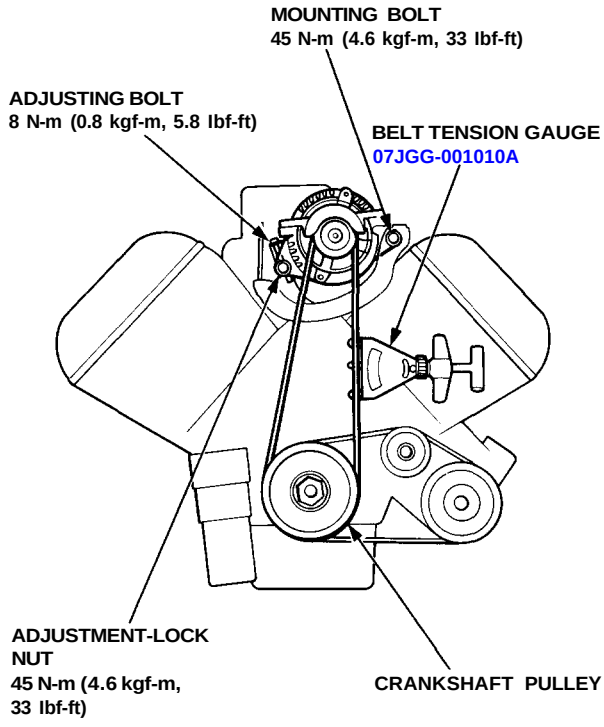

2. If belt tension is incorrect, loosen the adjustment-lock nut and the mounting bolt.
3. Turn the adjusting bolt until belt tension is correct, then retighten the nut and bolt.
4. Recheck the belt tension.

Radiator and Condenser Fan Controls

Component Location Index

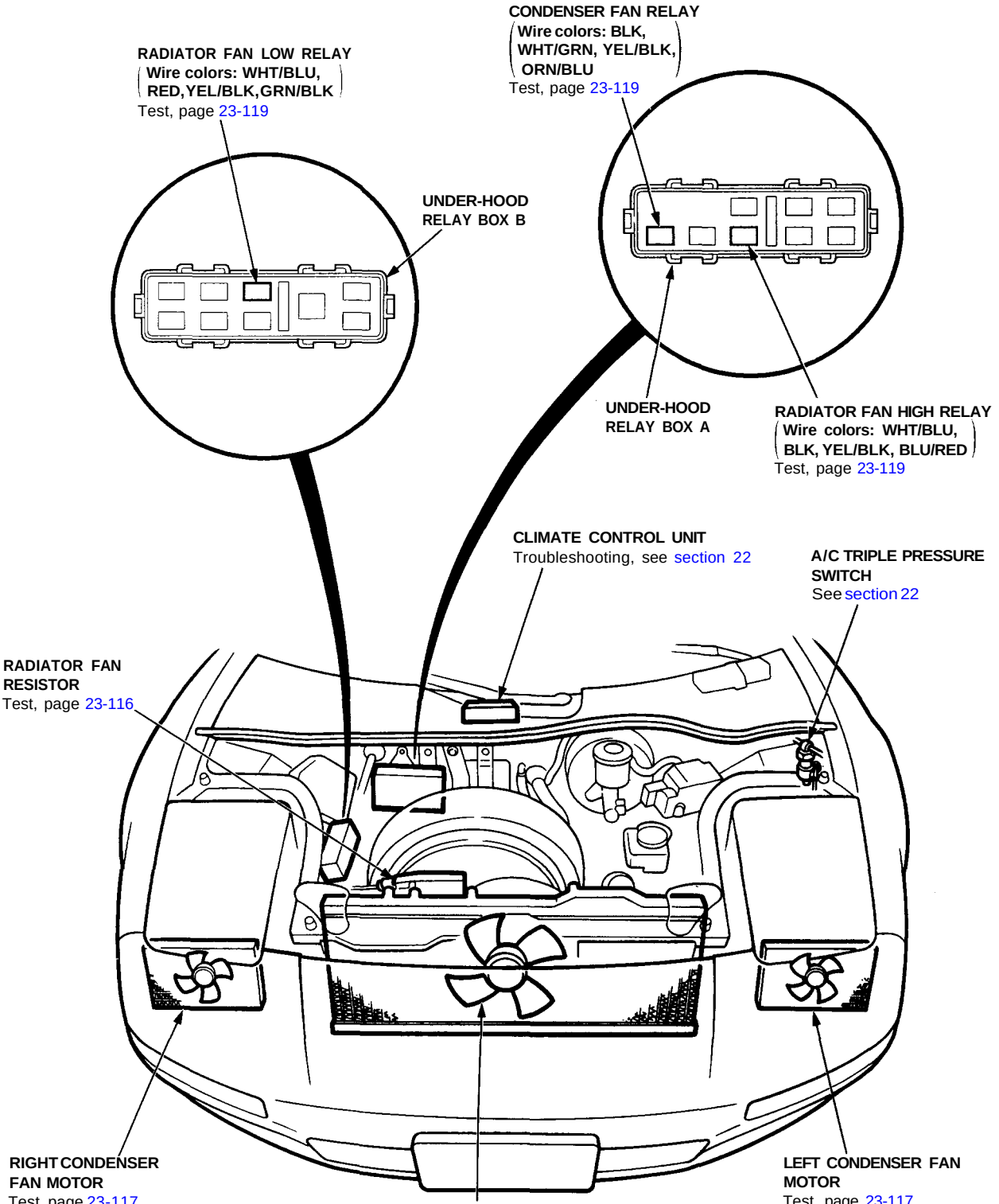

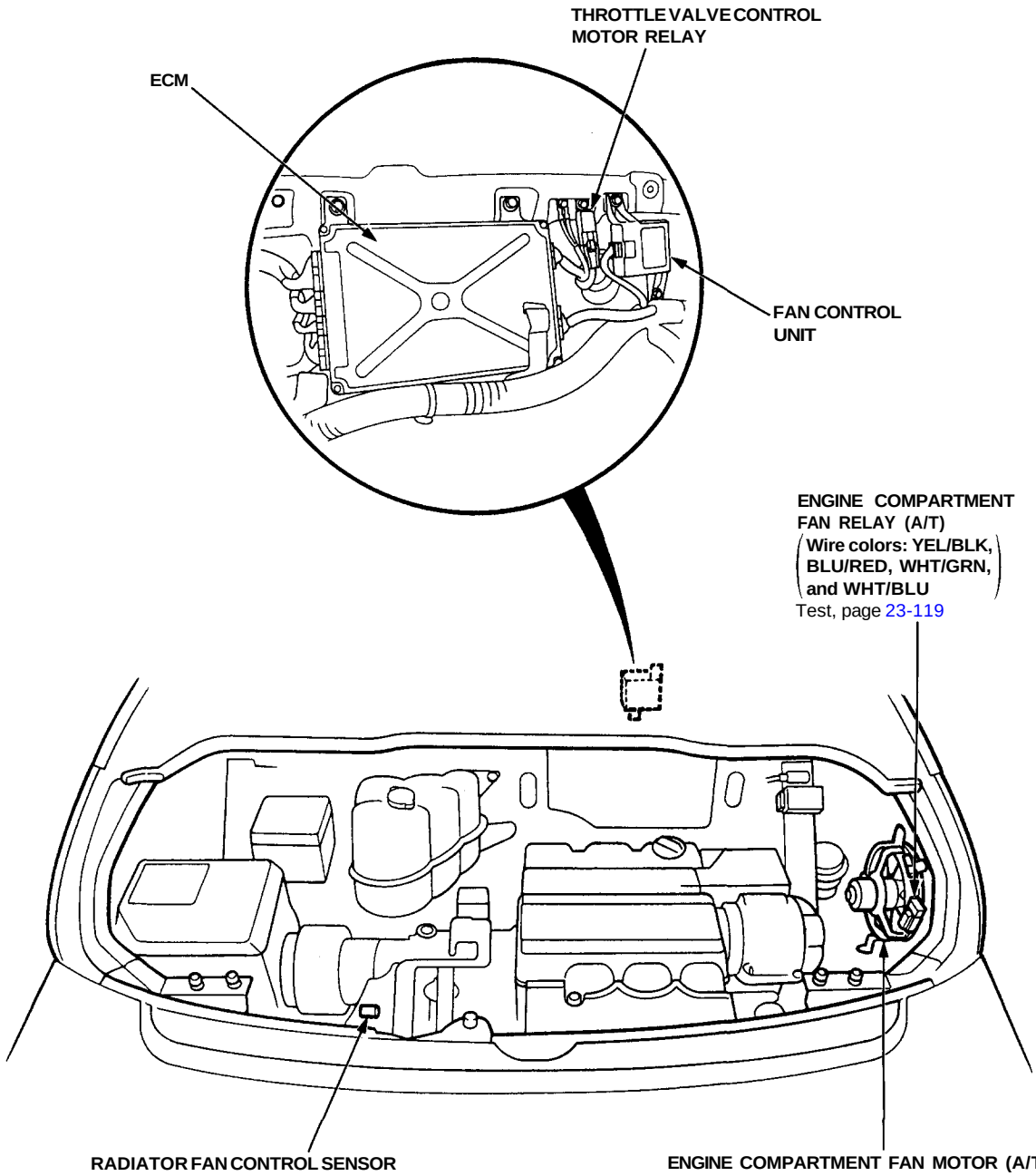
THROTTLE VALVE CONTROL MOTOR RELAY
ECM
FAN CONTROL UNIT
ENGINE COMPARTMENT FAN RELAY (A/T)
Wire colors: YEL/BLK, BLU/RED, WHT/GRN, and WHT/BLU
Test, page 23-119
RADIATOR FAN CONTROL SENSOR
Test, page 23-120
ENGINE COMPARTMENT FAN MOTOR (A/T)
Test, page 23-118
Replacement, page 23-118

Radiator and Condenser Fan Controls

Description

Fan control system:
The cooling fan system is comprised of the radiator fan, condenser fan (left and right), engine compartment fan, radiator fan low relay, radiator fan high relay, condenser fan relay, engine compartment fan relay, radiator fan resistor, radiator fan control sensor, A/C pressure switch, fan control unit, climate control unit, and ECM.

The fan control unit controls the operation of the radiator fan and condenser fans.
It uses inputs from the radiator fan control sensor and the A/C pressure switches (A and B) in the A/C system to determine when the fans should run and at what speed.
Additionally, the temperature switch shuts down the A/C system if the engine coolant temperature (ECT) exceeds 266°F (130°C). If the pressure in the A/C system is higher than normal, pressure switch A closes and the fans will run at high speed only. See the A/C section for the description and specifications of that function.

Function / Operating Condition	Starts at	Stops at
Radiator fan runs at low speed	183°F (84°C)	172°F (78°C)
Radiator fan runs at high speed, and engine compartment fan runs	194°F (90°C)	183°F (84°C)
A/C system shut-down	266°F (130°C)	262°F (128°C)

Troubleshooting

NOTE: The numbers in the table show the troubleshooting sequence.

Symptom \ Item to be inspected		Blown No. 31 (30 A), No. 36 (10 A) or No. 37 (10 A) fuse (In the under-hood fuse/relay box)	Blown No. 24 (10 A) fuse (In the engine compartment fuse/relay box)	Blown No. 4 (15 A) fuse (In the under-dash fuse box)	Relays	Radiator fan resistor	Radiator fan control sensor	Radiator fan motor	Engine compartment fan motor (A/T)	Condenser fan motors	*A/C and ECM systems	Faulty fan control unit	Faulty A/C triple pressure switch	Poor ground	Open circuit, loose or disconnected terminals
Only one fan runs (with engine and A/C ON).		1	2					3	4	5					WHT[2], WHT[3], WHT/BLU[3], WHT/GRN[2] or WHT/BLU[1]
Fans do not run.	Under all conditions			1	2		4					3		G401 G402 G403	YEL/BLK
	At low speed	1	2		3	4						5		G302	YEL/BLK, WHT[2] or RED
	At high speed				1				2			3		G102 or G202	YEL/BLK, WHT/BLU[2], BLU/RED or WHT/BLU[1]
Compressor clutch does not engage as necessary.		1			2						3	5	4	G302	WHT/BLU[3], WHT[3], BRN/BLK or ORN/BLU

*: Refer to section 22 for A/C pressure inspection of the A/C system.

Radiator and Condenser Fan Controls

Control Unit Terminals

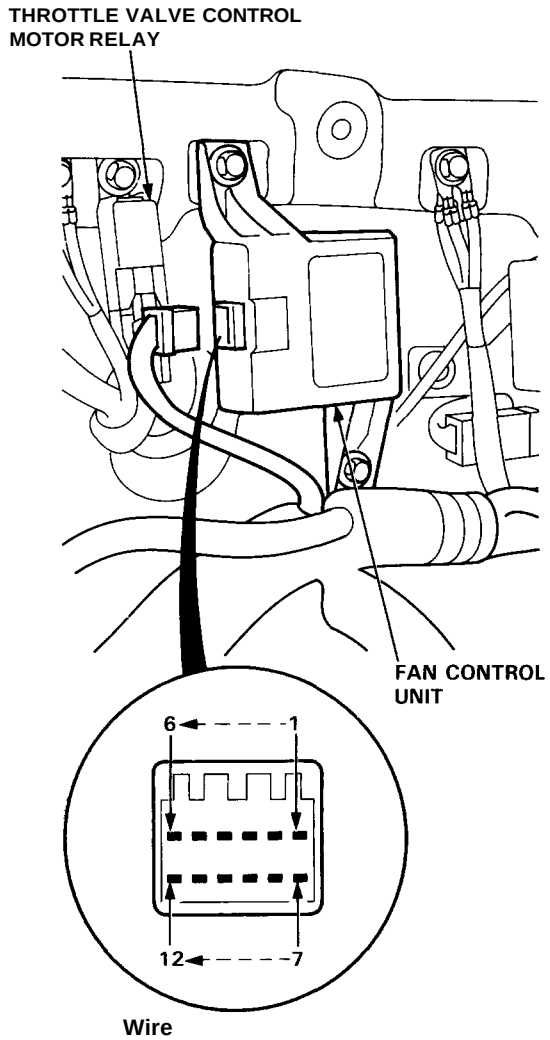

Terminal	Wire Color	Connects to
1	–	Not used
2	LT GRN	Radiator fan control sensor ⊖
3	GRY/BLK	Climate control unit
4	BLU/RED	Radiator fan high and engine compartment fan relays coil ⊖
5	BLK	Ground (G401, G402, G403)
6	BRN/BLK	A/C triple pressure switch A
7	GRN	Radiator fan control sensor ⊕
8	–	Not used
9	ORN/BLU	Condenser fan relay coil ⊖
10	BLU/BLK	ECM (ACS)
11	YEL/BLK	IG2 (Power supply)
12	GRN/BLK	Radiator fan low relay coil ⊖

Radiator Fan Resistor Test

1. Disconnect the 3P connector from the resistor.

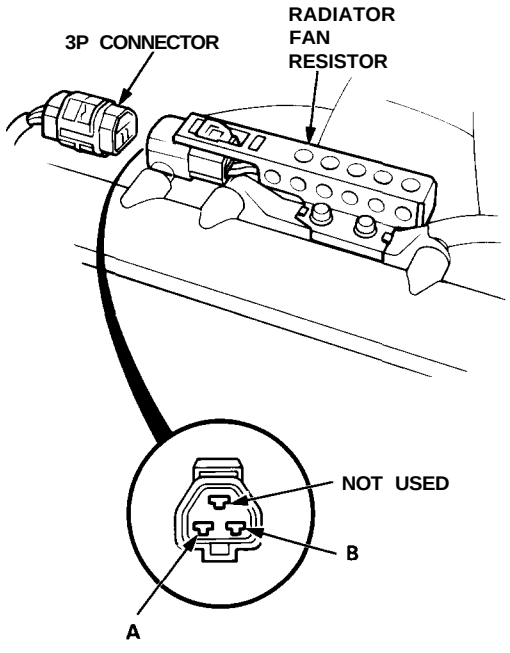

2. Using an ohmmeter, measure resistance between the A and B terminals. Replace the resistor if the resistance is not within specifications.

NOTE: Resistance will vary with the resistor temperature; specifications are at 68°F (20°C).

Radiator Fan Resistor
Resistance: 0.54—0.66 ohms

Radiator Fan Motor Test

1. Disconnect the 2P connector from the radiator fan motor.

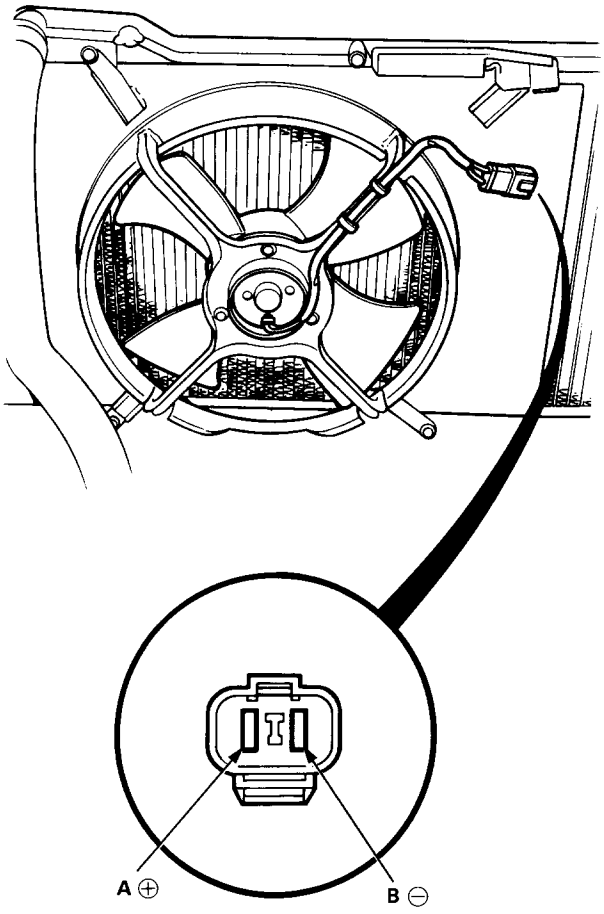

2. Test the motor by connecting battery power to the A terminal, and ground to the B terminal.

3. If the motor fails to run or does not run smoothly, replace it.

Condenser Fan Motor Test

1. Disconnect the 2P connector from the condenser fan motor.

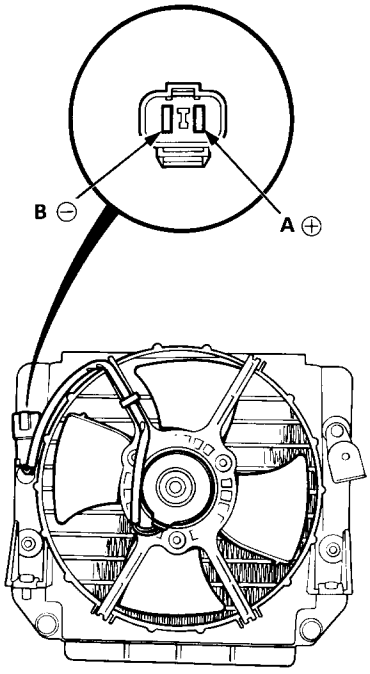

NOTE: The illustration shows the right condenser.

2. Test the motor by connecting battery power to the A terminal, and ground to the B terminal.

3. If the motor fails to run or does not run smoothly, replace it.

Radiator and Condenser Fan Controls

Engine Compartment Fan Motor Test (A/T)

1. Disconnect the 2P connector from the engine compartment fan motor.

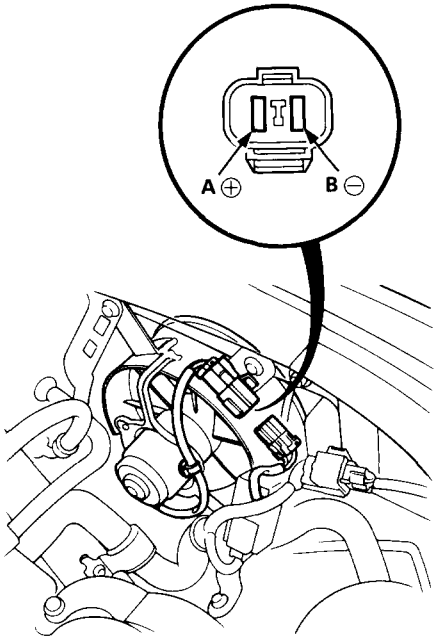

2. Test the motor by connecting battery power to the A terminal, and ground to the B terminal.

3. If the motor fails to run or does not run smoothly, replace it.

Engine Compartment Fan Motor Removal (A/T)

1. Disconnect the 2P connector from the engine compartment fan motor.

2. Remove the engine compartment fan relay, the test tachometer connector, and the engine wire harness from the engine compartment fan shroud.

3. Remove the three mounting bolts.

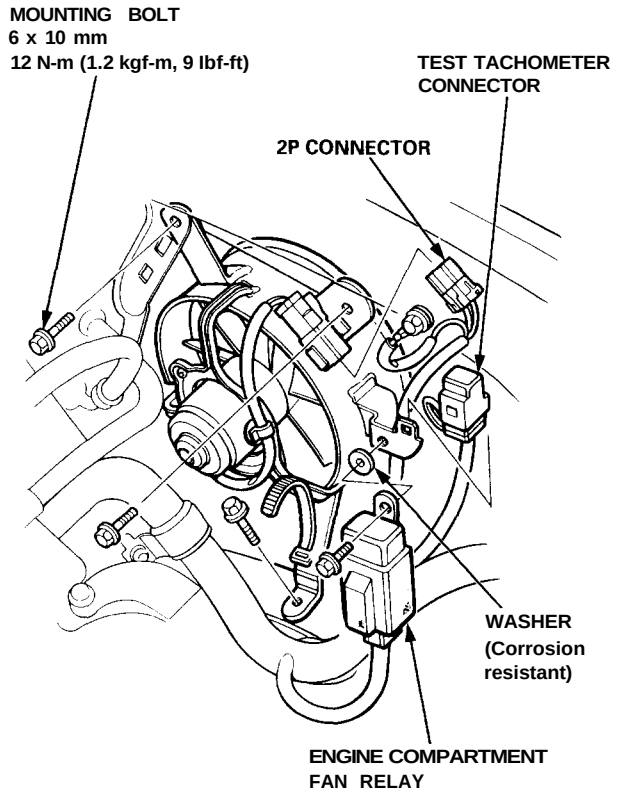

Fan Relay Tests

Check continuity at the relay terminals.

- There should be continuity between the C and D terminals.
- There should be continuity between the A and B terminals when power and ground are connected to the C and D terminals.
- There should be no continuity between the A and B terminals when power is disconnected.

- **Radiator fan low relay**

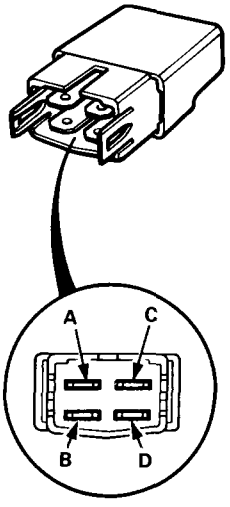

- **Radiator fan high relay**
- **Condenser fan relay**

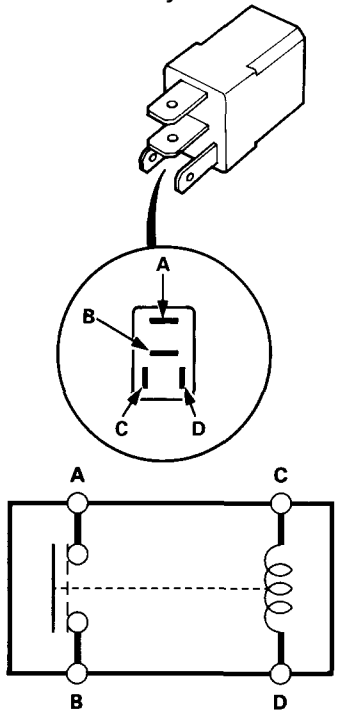

Engine compartment fan relay (A/T)

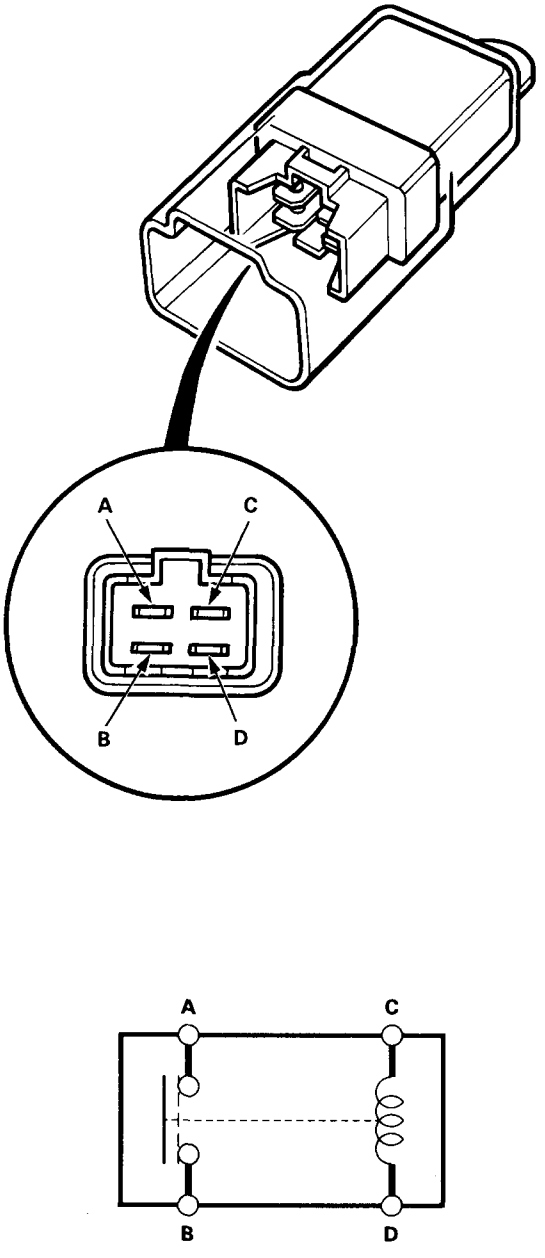

Radiator and Condenser Fan Controls

Radiator Fan Control Sensor Test

NOTE: Bleed air from the cooling system after installing the radiator fan control sensor (see section 10).

1. Remove the radiator fan control sensor from the thermostat cover.

2. Suspend the radiator fan control sensor in a container of coolant as shown.

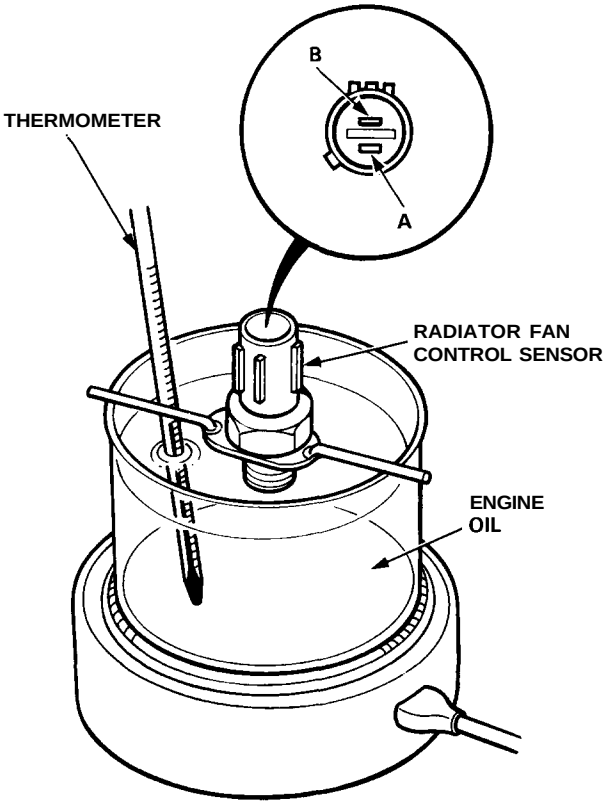

3. Heat the coolant, and check coolant temperature with a thermometer (see table below).

4. Measure the resistance between the A and B terminals according to the table.

Temperature	183°F (84°C)	194°F (90°C)	226°F (108°C)	230°F (110°C)
Resistance (KΩ)	1.047–1.255	0.872–1.024	0.519–0.573	0.489–0.541

5. If unable to obtain the above readings, replace the radiator fan control sensor.

Gauge Assembly

Gauge/Terminal Location Index

SRS components are located in this area. Review the SRS component locations, precautions, and procedures in the SRS (section 24) before performing repairs or service.

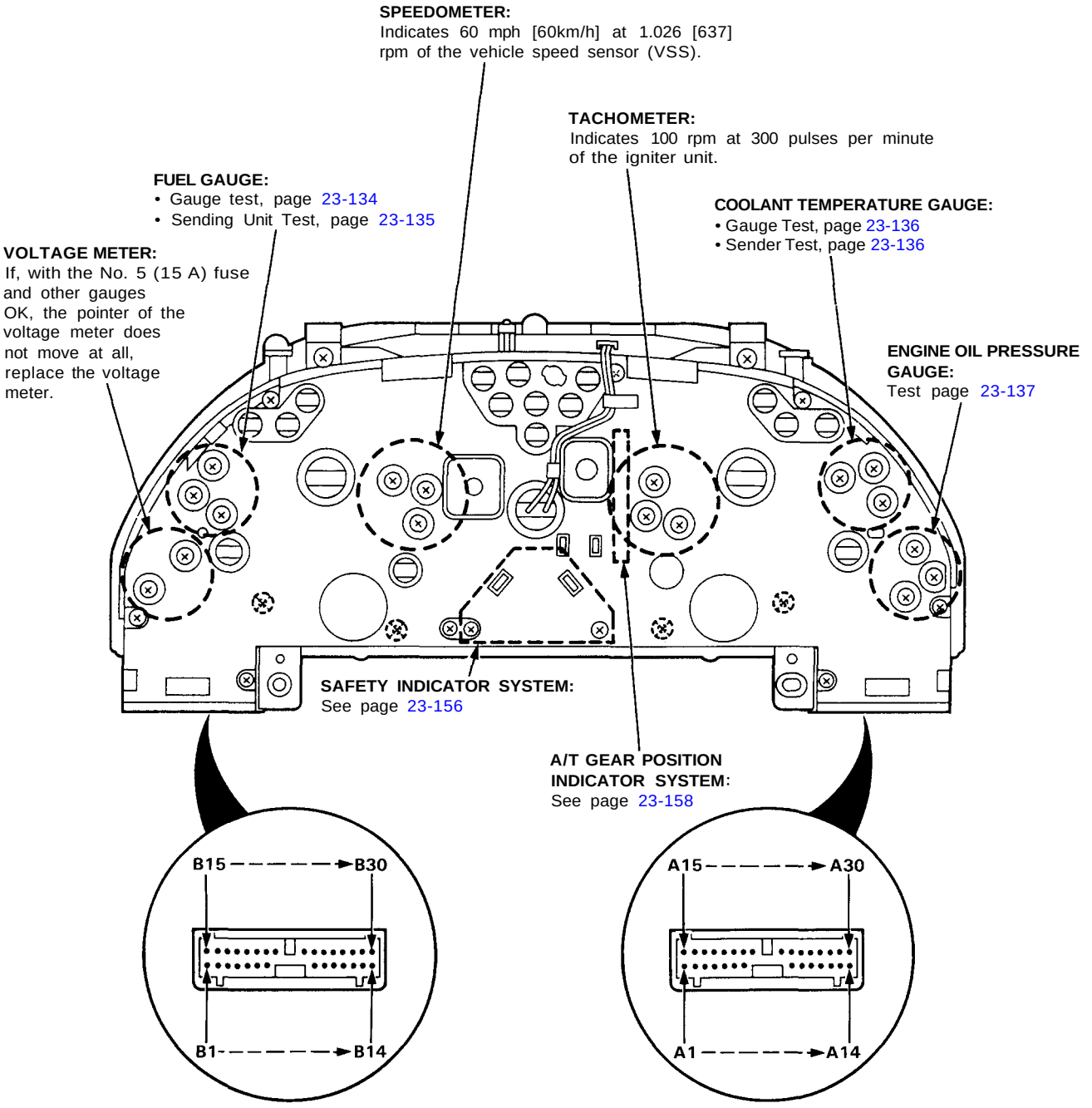

Gauge Assembly

Removal

SRS components are located in this area. Review the SRS component locations, precautions, and procedures in the SRS (section 24) before performing repairs or service.

1. Remove the dashboard lower cover, and disconnect the floor wire harness connectors.
2. Remove the two screws, then remove the dashboard lower pad from the dashboard.

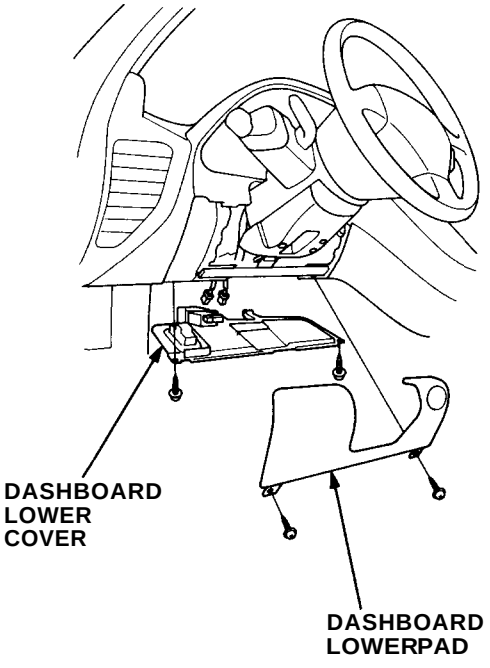

3. Remove the three screws, then remove the tilt cover from the steering column.

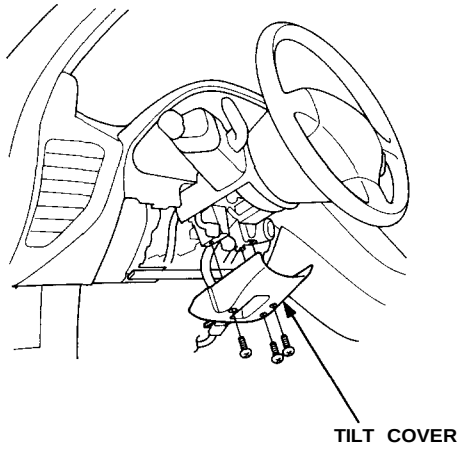

4. Disconnect the connectors from the instrument panel switches.
5. Remove the six screws, then remove the instrument panel trim from the dashboard.

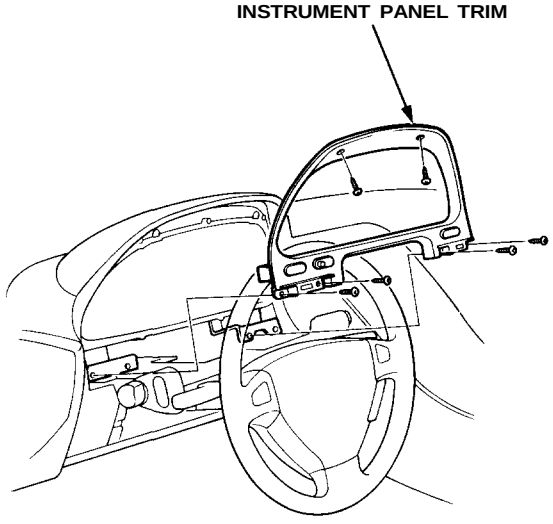

6. Remove the eight screws, then remove the steering column covers.

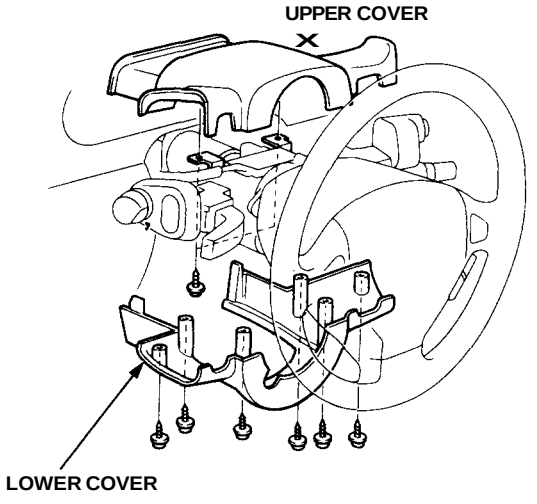

7. Disconnect the 30P connectors from both sides of the gauge assembly.

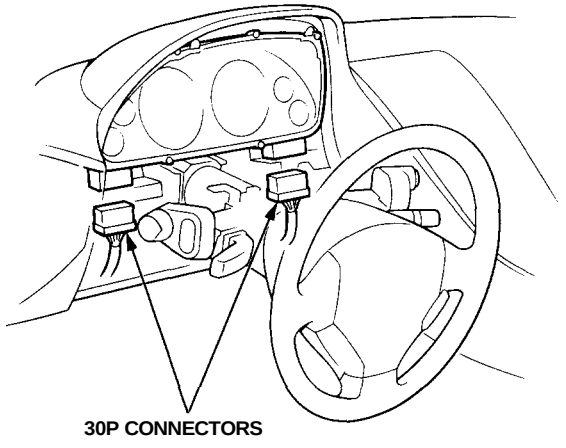

8. Lay a protective cloth on the combination switches to prevent scratching the gauge assembly. Remove the four screws, then take out the gauge assembly as shown.

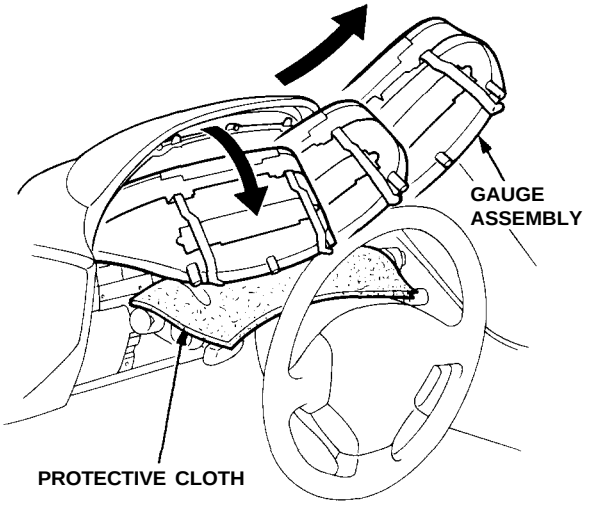

Gauge Assembly

Bulb Locations

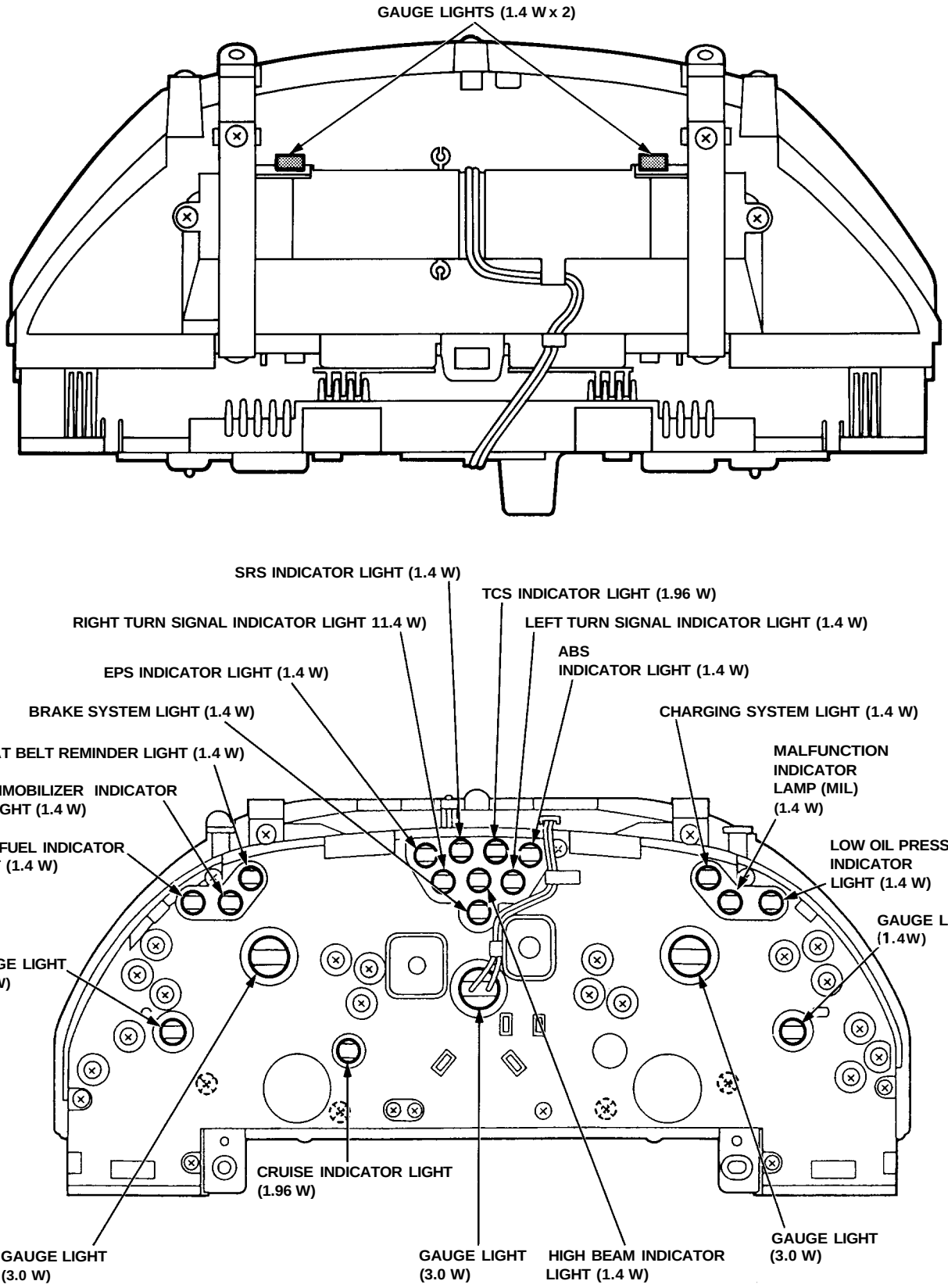

Disassembly

NOTE:

- Handle the terminals and printed circuit boards carefully to avoid damaging them.
- Replace the speedometer, trip meter, and printed circuit board A as a unit if any of them is faulty.
- Replace the tachometer, odometer, and printed circuit board B as a unit if any of them is faulty.

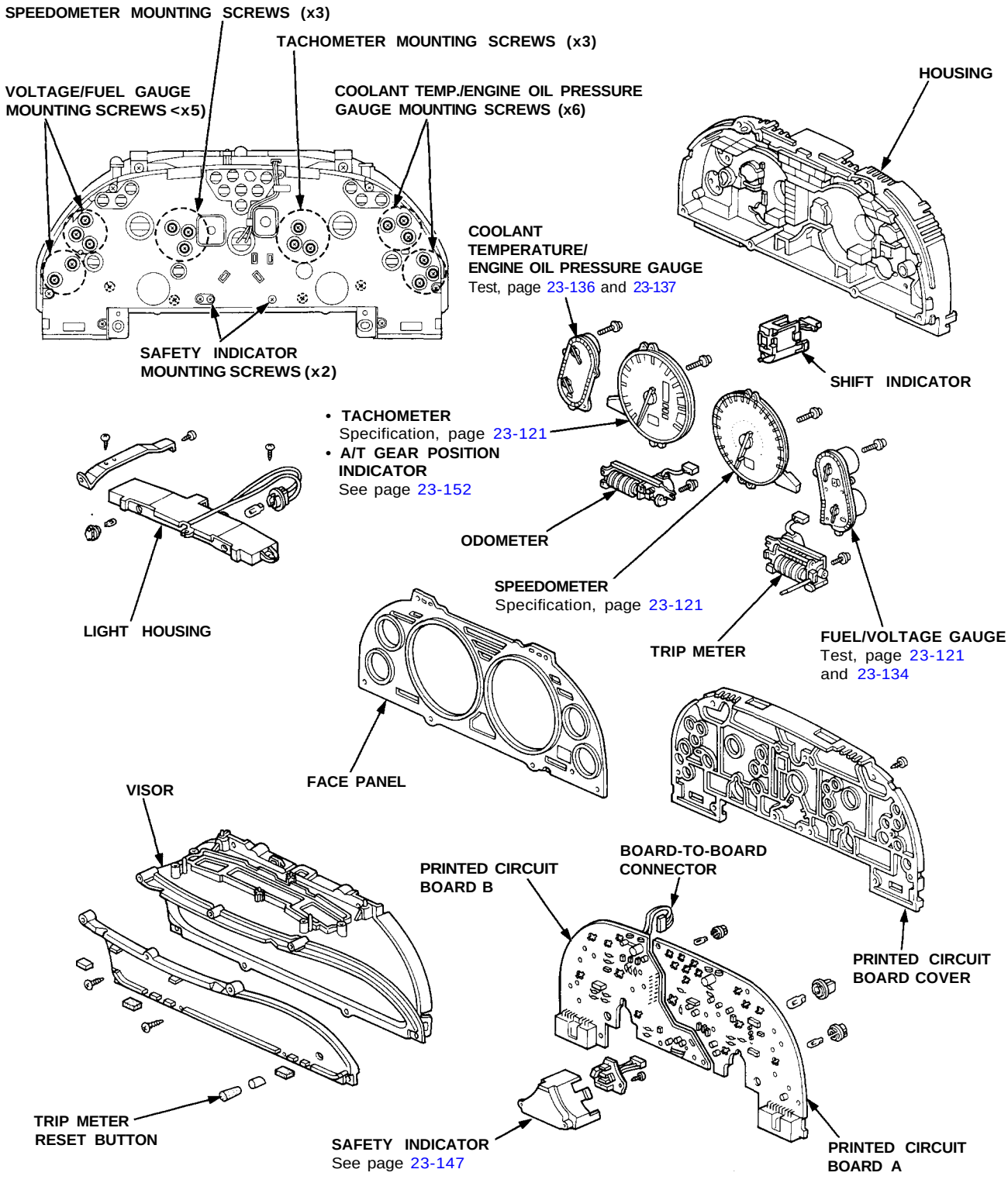

Speedometer/Trip Meter/Odometer

Troubleshooting

NOTE: The numbers in the table show the troubleshooting sequence.

Item to be inspected / Symptom	Blown No. 5 (15 A) fuse (In the under-dash fuse box)	Speedometer	Odometer	Trip meter	Printed circuit board A	Printed circuit board B	Vehicle speed sensor (VSS) input test	Vehicle speed sensor (VSS) is not installed correctly	Disconnected board-to-board connector	Poor ground	Open circuit, loose or disconnected terminals
Speedometer works, but deflection error is great.					2			1			
Odometer and trip meter work, but speedometer does not.		1			2						
Speedometer and trip meter work, but odometer does not.			2		4	3			1		
Speedometer and odometer work, but trip meter does not.				1	2						
Speedometer works, but odometer and trip meter do not.					1						
Speedometer, odometer and trip meter do not work.	1				3		2			G401 G402 G403	YEL

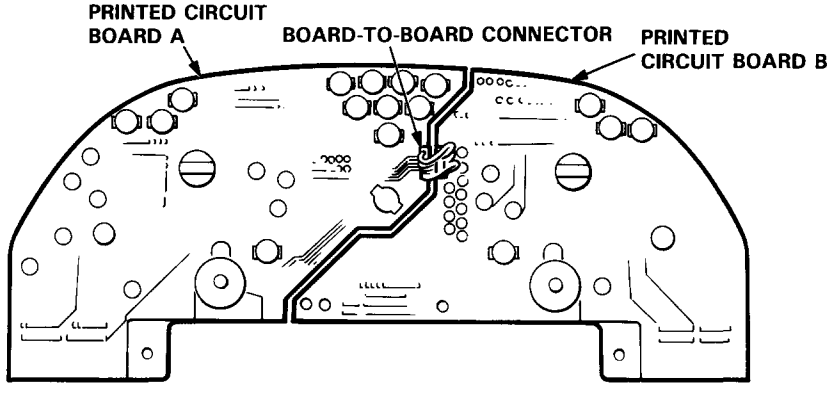

View from the back of the gauge assembly

Vehicle Speed Sensor (VSS)

Replacement

1. Disconnect the 3P connector from the vehicle speed sensor (VSS).

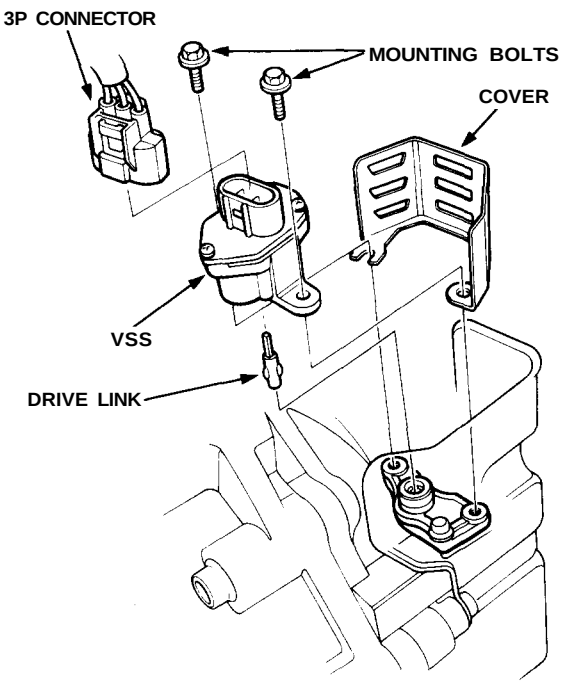

2. Remove the mounting bolts and the VSS, then take out the VSS assembly.

   NOTE: The VSS drive link is a very small part, be careful not to lose it.

3. Install in the reverse order of removal.

Fuel Gauge

Gauge Test

1. Before testing, check the No. 5 (15 A) fuse in the under-dash fuse box.
2. Remove the rear bulkhead panel behind the driver's seat, then remove the access panel.
3. Disconnect the 3P connector from the fuel gauge sending unit.

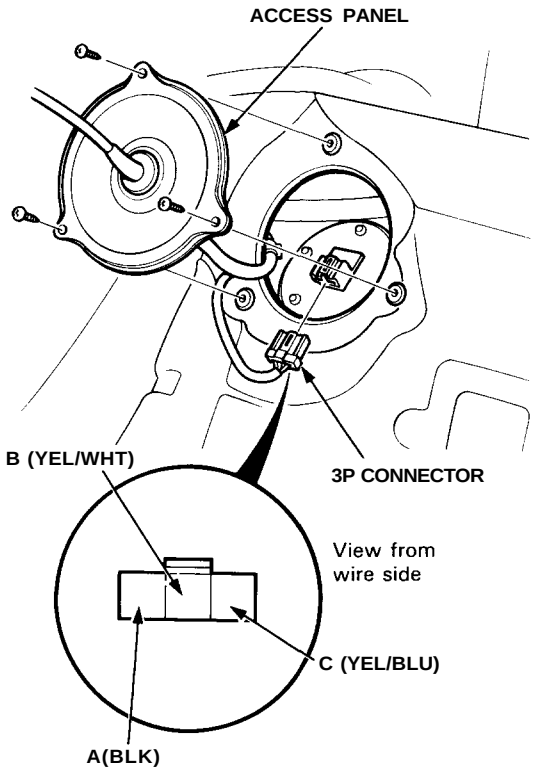

4. Connect the voltmeter positive probe to the B (YEL/WHT) terminal and the negative probe to the C (BLK) terminal, then turn the ignition switch ON (II). There should be between 5 and 8 V.
   - If the voltage is as specified, go to step 5.
   - If the voltage is not as specified, check for:
     - An open in the YEL, YEL/WHT or BLK wire.
     - Poor ground (G403).
5. Turn the ignition switch OFF. Connect a jumper wire between the B (YEL/WHT) and A (BLK) terminals.

   CAUTION: Do not apply battery voltage to the terminals; it will damage the fuel gauge.
6. Turn the ignition switch ON (II). Check that the pointer of the fuel gauge starts moving toward the "F" mark.

   CAUTION: Turn the ignition switch OFF before the pointer reaches the "F" mark on the gauge dial; if you don't, you may cause damage to the fuel gauge.
   - If the pointer of the fuel gauge does not move at all, replace the gauge.
   - If the fuel gauge is OK, check the sending unit.

Sending Unit Test

⚠ WARNING Do not smoke while working on the fuel system. Keep open flame away from work area.

1. Remove the rear bulkhead panel behind the driver's seat, then remove the access panel.
2. With the ignition switch OFF, disconnect the 3P connector from the fuel gauge sending unit.
3. Remove the five nuts, then take the fuel gauge sending unit assembly out of the fuel tank.

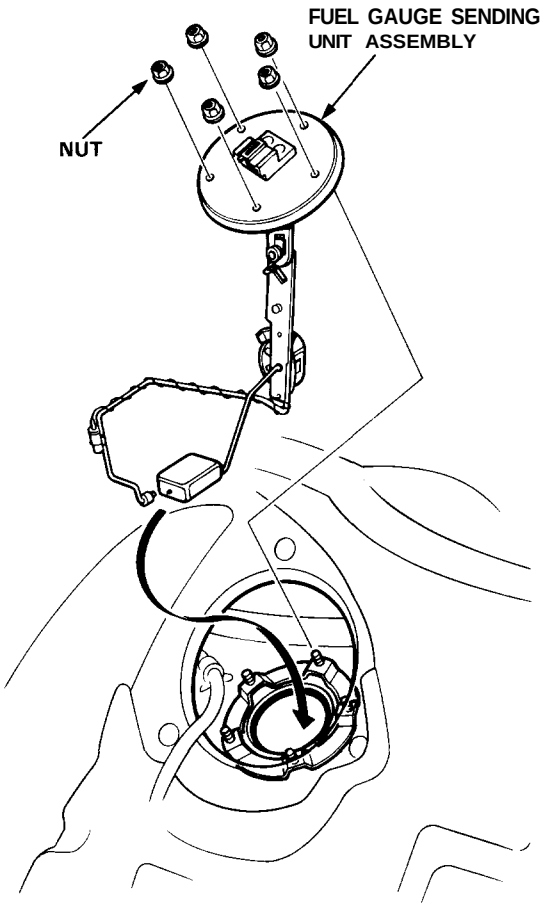

4. Measure the resistance between the A and B terminals by moving the float to the heights listed for E (EMPTY), 1/2 (HALF FULL) and F (FULL).

Float Position	E	1/2	F
Resistance (Ω)	105-110	25.5-39.5	2-5

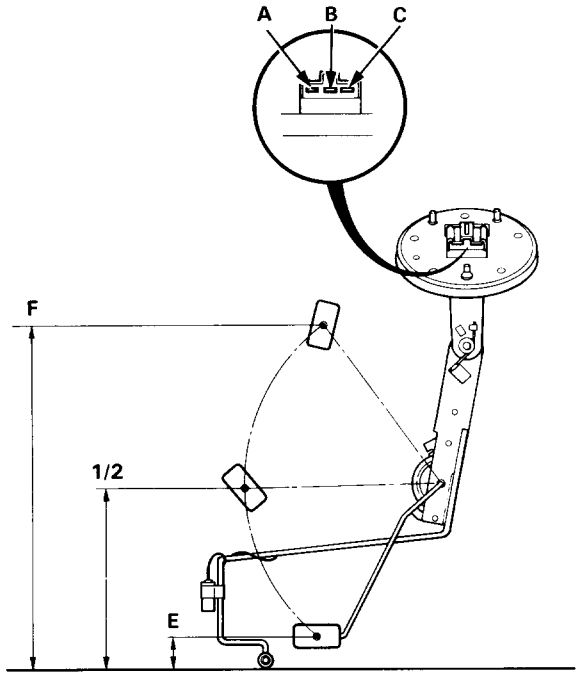

(Bottom of the fuel tank)

Distance from float to tank bottom		
E	1/2	F
1.16 in (29.5 mm)	5.55 in (141 mm)	10.4 in (263 mm)

5. If unable to obtain the above readings, replace the fuel gauge sending unit.

Coolant Temperature Gauge

Coolant Temperature Gauge Test

1. Before testing, check the No. 5 (15 A) fuse in the under-dash fuse box.

2. Make sure the ignition switch is OFF, then disconnect the YEL/GRN wire from the coolant temperature gauge sending unit and ground it with a jumper wire.

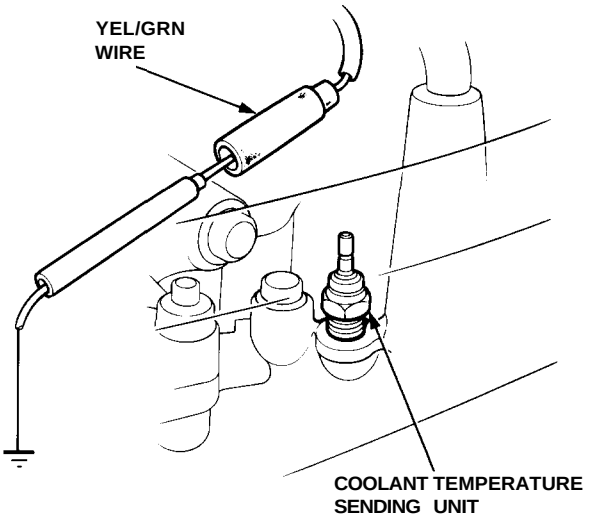

3. Turn the ignition switch ON (II).
   Check that the pointer of the coolant temperature gauge starts moving toward the "H" mark. Turn the ignition switch OFF before the pointer reaches the "H" mark on the gauge dial; if you don't, you may damage the gauge.

   - If the pointer of the gauge does not swing at all, check for:
     — An open in the YEL or YEL/GRN wire.
     — Replace the coolant temperature gauge if the fuse and wiring is OK.

   - If the coolant temperature gauge is OK, check the sending unit.

Coolant Temperature Gauge Sending Unit Test

1. Disconnect the YEL/GRN wire from the sending unit, and with the engine cold, use an ohmmeter to measure resistance between the positive terminal and the engine (ground).

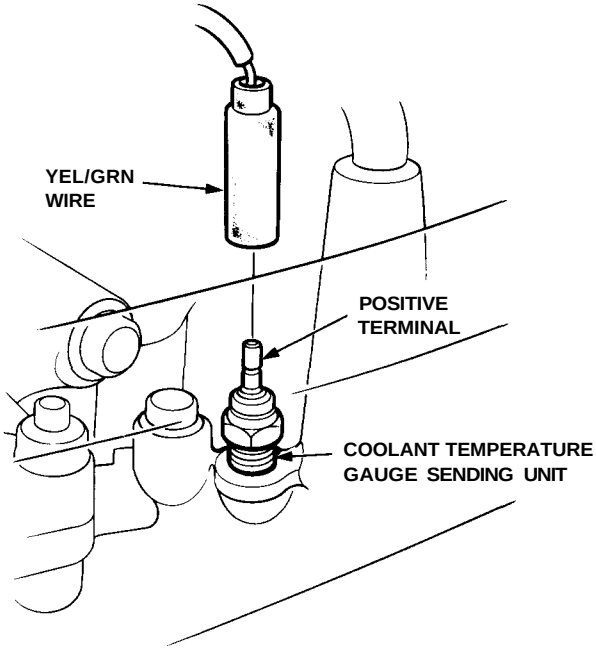

2. Check the temperature of the coolant.

3. Run the engine, and measure the change in resistance with the engine at operating temperature (radiator fan comes on).

Temperature	133°F (56°C) ["C" mark]	85°F (85°C) - 212°F (100°C)
Resistance (Ω)	142	49-32

4. If the readings you get are substantially different from the specifications above, replace the coolant temperature gauge sending unit.

Engine Oil Pressure Gauge

Gauge Test

1. Before testing, check the No. 5 (15 A) fuse in the under-dash fuse box.
2. Make sure the ignition switch is OFF, then disconnect the 2P connector from the engine oil pressure sending unit, and ground it with a jumper wire.

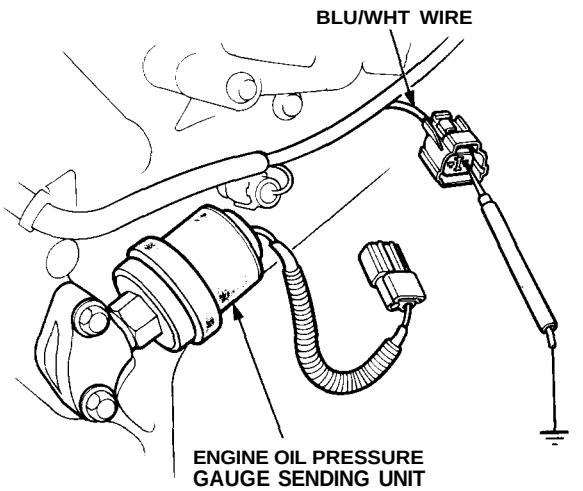

3. Turn the ignition switch ON (II).
   Check that the pointer of the engine oil pressure gauge starts moving toward the "8" mark.

   CAUTION: Turn the ignition switch OFF before the pointer reaches the "8" mark on the gauge dial; if you don't, you may cause damage to the gauge.

   - If the pointer of the gauge does not move at all, check for:
     — An open in the YEL or BLU/WHT wire.
     — Replace the engine oil pressure gauge if the wiring is OK.
   - If the engine oil pressure gauge is OK, go on to step 4.

4. Check the engine-oil pressure (see section 8).
   - If the engine oil pressure is OK, replace the engine oil pressure sending unit.

Engine Oil Pressure Warning System

Engine Oil Pressure Switch Test

1. Raise the car, and place safety stands in the proper locations (see section 1).
2. Remove the right rear tire.
3. Remove the YEL/RED wire from the engine oil pressure switch.

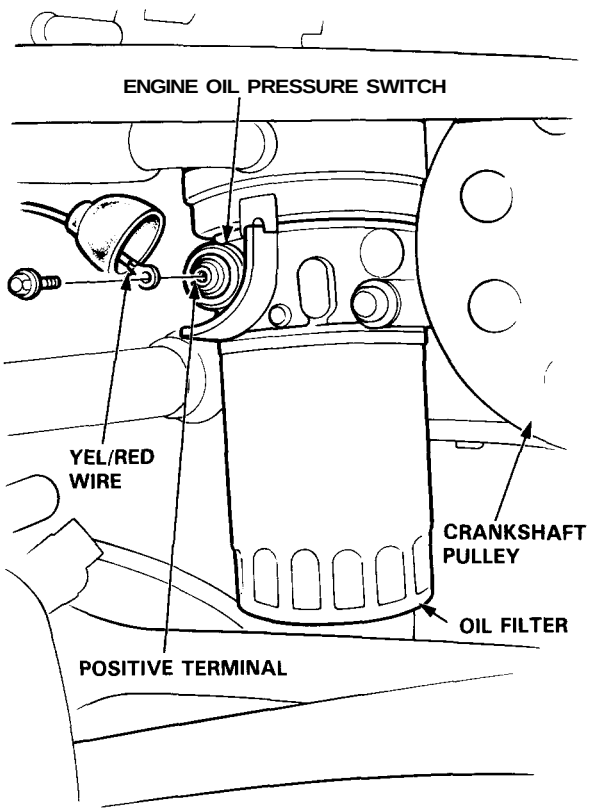

4. Check continuity between the positive terminal and engine (ground) with the engine off.
   - If there is no continuity, the switch is OK.
   - If there is continuity, do not replace the switch; first check other possible causes in step 6.

6. Make sure engine oil level is OK, then check engine oil pressure (see section 8).
   - If engine oil pressure is OK, replace the engine oil pressure switch.
   - If oil pressure is low, remove, inspect, and, if necessary, replace the oil pump (see section 8).

Brake Warning System

Parking Brake Switch Test

1. Remove the center console, and disconnect the connector from the switch.
2. Check continuity between the positive terminal and body ground with the brake lever up and down.
   - There should be no continuity with the brake lever down.
   - There should be continuity with the brake lever up.

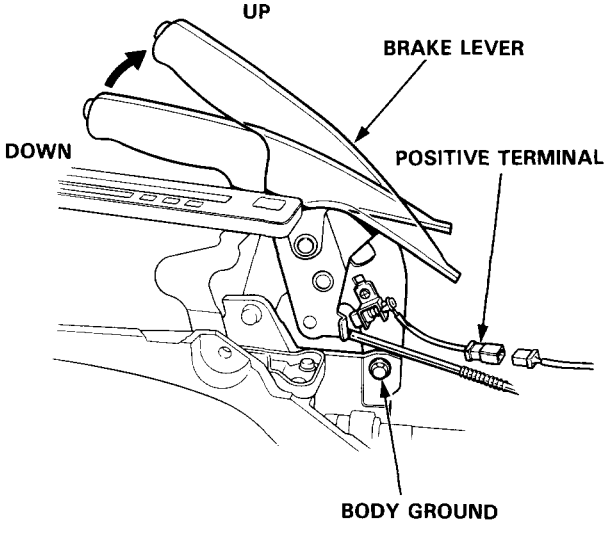

NOTE: (Canada)
If the parking brake switch is OK, but the brake warning system does not work, make the input test for the daytime running lights control unit (see page 23-182).

Brake Fluid Level Switch Test

1. Remove the reservoir cap. Check that the float moves up and down freely; if it doesn't, replace the reservoir cap assembly.

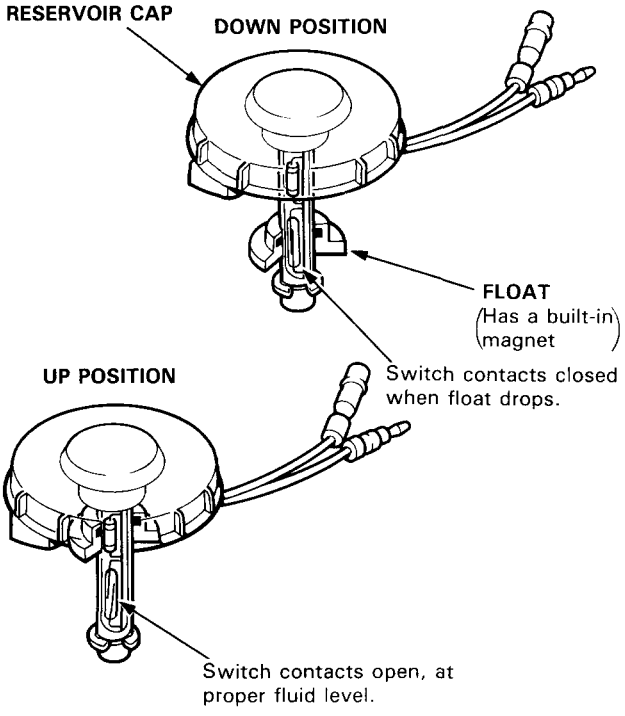

2. Check for continuity between the terminals with the float up and down.
   There should be continuity with the float down and no continuity with the float up; if continuity is incorrect, replace the reservoir cap assembly.

Seat Belt Reminder System

Seat Belt Switch Test

1. Slide the driver's seat all the way forward, then disconnect the 2P connector from the seat belt switch.
2. Check continuity between the A and B terminals with the driver's seat belt buckled and unbuckled.
   - There should be no continuity with the driver's seat belt buckled.
   - There should be continuity with the seat belt unbuckled.

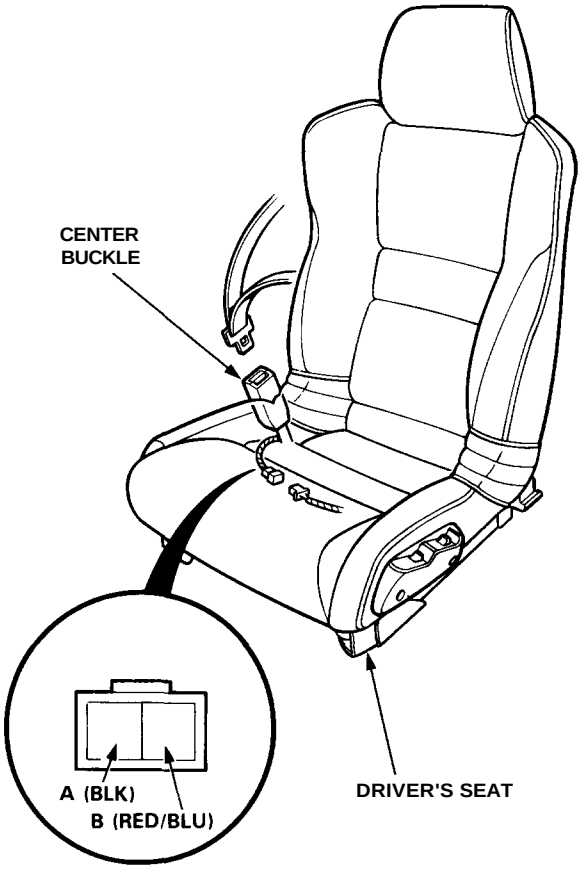

View from wire side

Low Fuel Indicator

Indicator Light Test

1. Park the car on level ground.

   ⚠ WARNING Do not smoke while working on the fuel system. Keep open flame away from the work area. Drain fuel only into an approved container.

2. Remove the drain bolt from the fuel tank, and drain the fuel into an approved container.
   Then install the drain bolt with a new washer.
3. Add less than 11 ℓ (2.9 U.S. Gal, 2.4 Imp. Gal) of fuel and turn the ignition switch on. The low fuel indicator light should come on within four minutes.
   - If it does, go to step 4.
   - If it doesn't, go to step 5.
4. Add 4 ℓ of fuel (1.1 U.S. Gal, 0.88 Imp. Gal). The light should go off within four minutes.
5. If the light did not come on in step 3 remove the rear bulkhead panel behind the driver's seat, then remove the access panel, and disconnect the 3P connector from the fuel gauge sending unit. Connect the A (BLK) terminal to the C (YEL/BLU) terminal with a jumper wire.
   - If the light comes on, the problem is either the sending unit or its ground.
   - If the light does not come on, the problem is an open in the C (YEL/BLU) wire to the gauge assembly, or no power to the gauge, or a bad bulb.

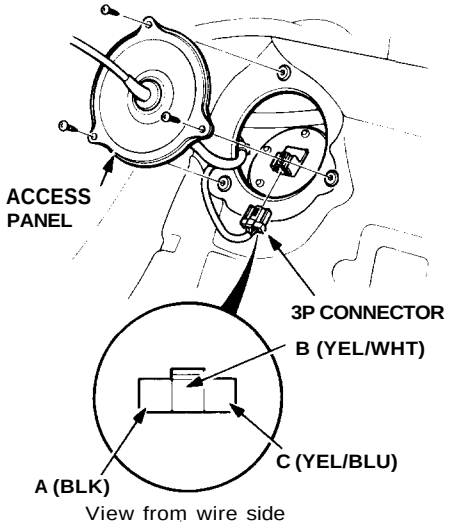

View from wire side

Interlock System

Component Location Index

SRS components are located in this area. Review the SRS component locations, precautions, and procedures in the SRS (section 24) before performing repairs or service.

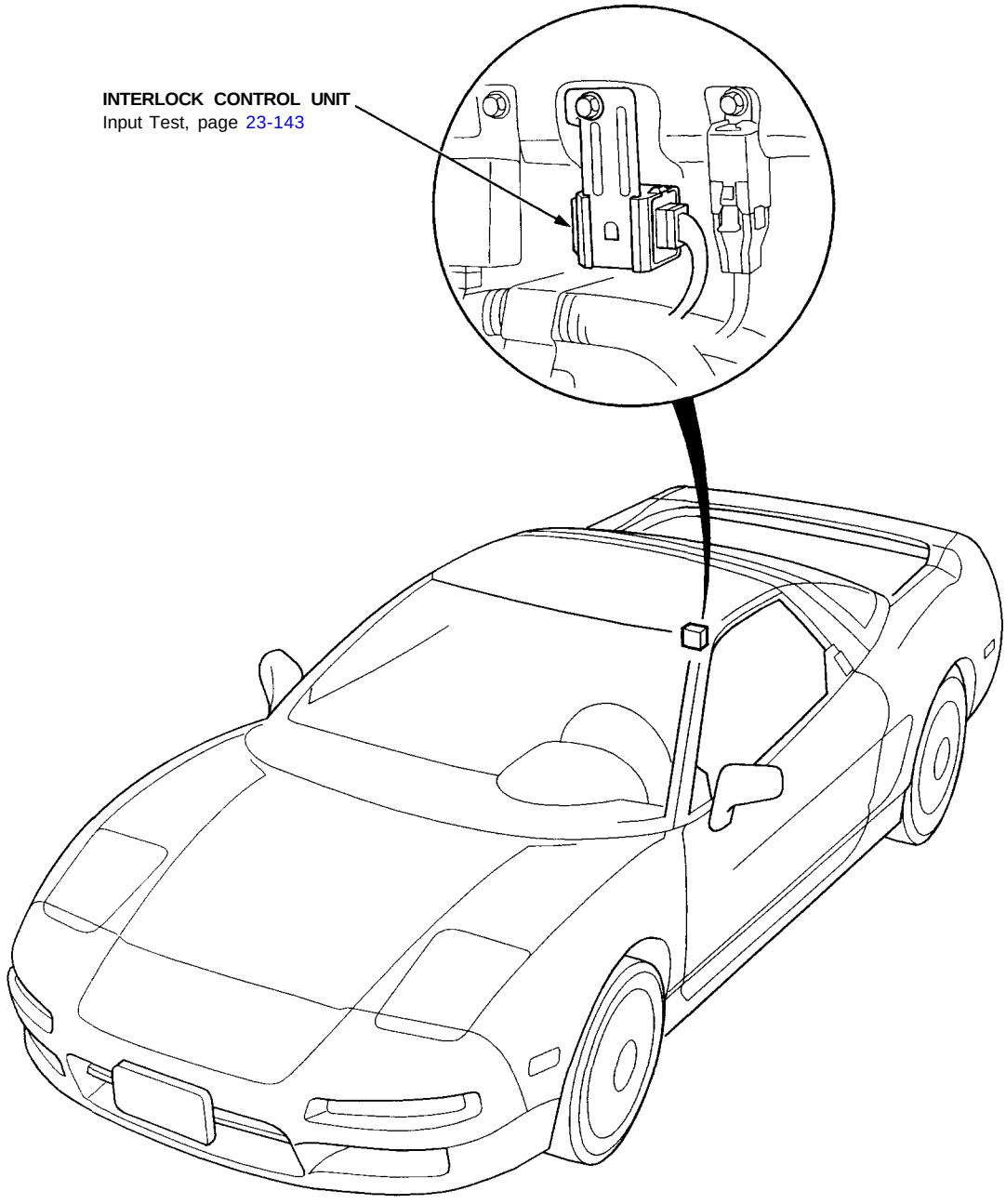

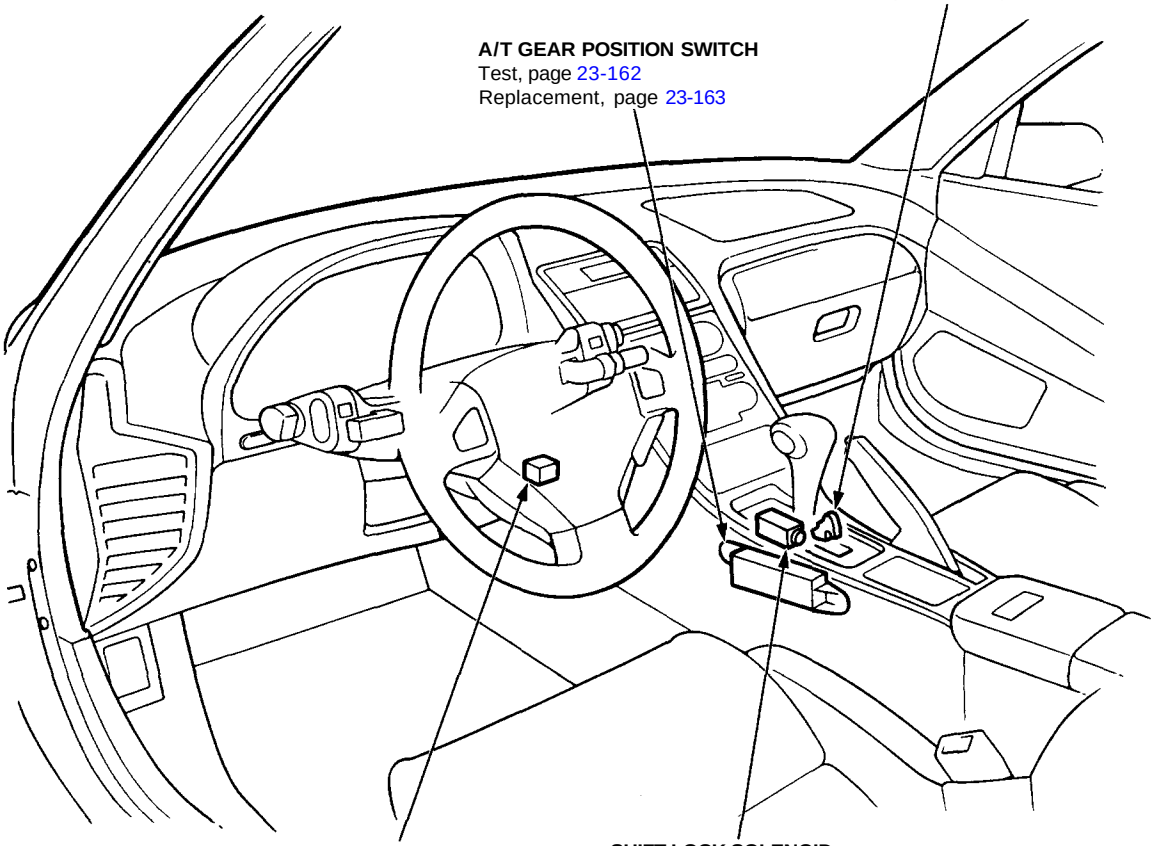
PARKING PIN SWITCH
Test, page 23-146
Replacement, page 23-146
A/T GEAR POSITION SWITCH
Test, page 23-162
Replacement, page 23-163
KEY INTERLOCK SOLENOID
and KEY INTERLOCK SWITCH
(In the steering lock assembly)
Test, page 23-144
SHIFT LOCK SOLENOID
Test, page 23-145
Replacement, page 23-145

Control Unit Input Test

Disconnect the 8P connector from the control unit.
Inspect the connector and socket terminals to be sure they are all making good contact.

- If the terminals are bent, loose, or corroded, repair them as necessary, and recheck the system.
- If the terminals look OK, make the following input tests at the connector.
  - — If a test indicates a problem, find and correct the cause, then recheck the system.
  - — If all the input tests prove OK, the control unit must be faulty; replace it.

NOTE: If the shift lock solenoid clicks when you step on the brake pedal with the ignition switch ON (II) (the shift lever in [P] position), the shift lock system is electronically OK. If the shift lever cannot be shifted from [P] position, see page 23-162 and section 14.

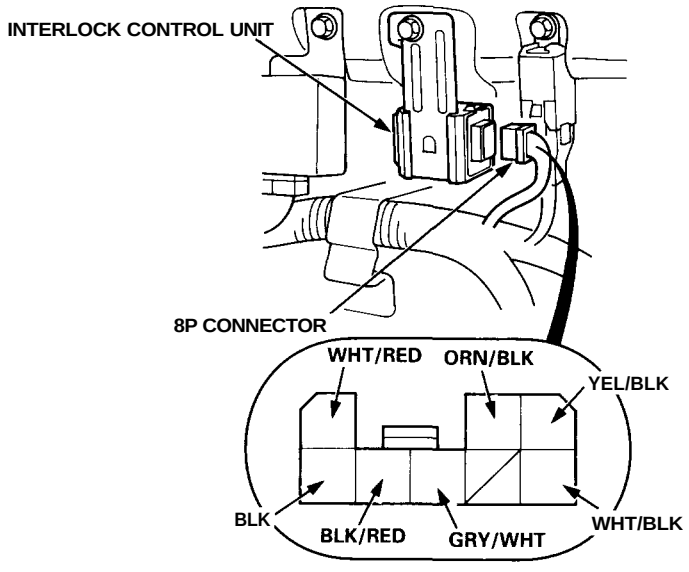

View from wire side

Shift Lock System:

Wire	Test condition	Test: Desired result	Possible cause if result is not obtained
ORN/BLK	Ignition switch ON (II) Brake pedal pushed	Check for voltage to ground: There should be battery voltage.	• Blown No. 45 (20 A) fuse • Faulty brake switch • Faulty throttle position (TP) sensor • Faulty transmission control module (TCM) • An open in the wire
	Ignition switch ON (II); step on the brake pedal and the accelerator at the same time.	Check for voltage to ground: There should not be battery voltage.	
GRY/WHT	Shift lever in [P] position	Check for continuity to ground: There should be continuity.	• Faulty A/T gear position switch • Poor ground (G401, G402, G403) • An open in the wire
YEL/BLK	Ignition switch ON (II)	Check for voltage to ground: There should be battery voltage.	• Blown No. 5 (15 A) fuse • Faulty shift lock solenoid • An open in the wire

Key Interlock System:

Wire	Test condition	Test: Desired result	Possible cause if result is not obtained
BLK	Under all conditions	Check for continuity to ground: There should be continuity.	• Poor ground (G401, G402, G403) • An open in the wire
GRY/WHT	Shift lever in [P] position	Check for continuity to ground: There should be continuity.	• Faulty A/T gear position switch • Poor ground (G401, G402, G403) • An open in the wire
WHT/RED	Ignition switch turned to ACC (I) and the key pushed all the way in	Check for voltage to ground: There should be battery voltage.	• Blown No. 45 (20 A) fuse • Faulty steering lock assembly (key interlock solenoid) • An open in the wire
BLK/RED	Ignition switch turned to ACC (I) and the key pushed all the way in	Check for voltage to ground: There should be battery voltage.	• Blown No. 45 (20 A) fuse • Faulty steering lock assembly (key interlock switch) • An open in the wire
WHT/BLK	Shift lever in [P], push button pressed	Check for continuity to ground: There should be continuity.	• Faulty parking pin switch • Poor ground (G401, G402, G403) • An open in the wire
	Shift lever in [P], push button released	Check for continuity to ground: There should be no continuity.	• Faulty parking pin switch • Short to ground

Interlock System

Key Interlock Solenoid Test

1. Remove the dashboard lower cover, and disconnect the floor wire harness connectors.

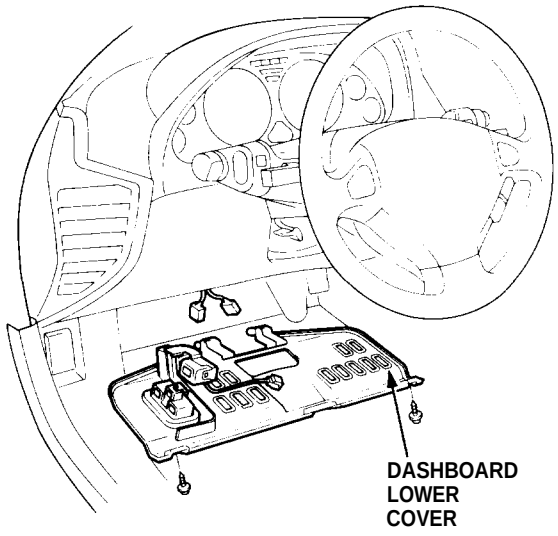

2. Disconnect the 8P connector from the floor wire harness.

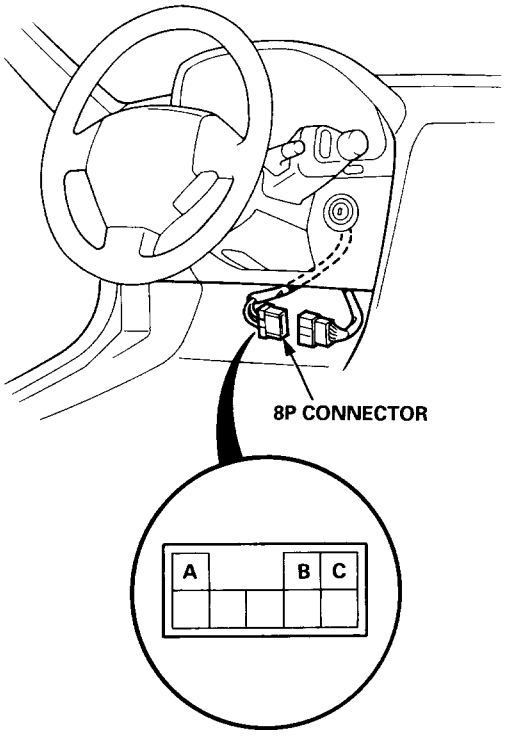

View from wire side

3. Check for continuity between the terminals in each switch position according to the table.

Position		Terminal A	Terminal B	Terminal C
Ignition switch ACC (I)	Key pushed in	○	○	○
	Key released	○	○	

4. Check that the key cannot be removed with power and ground connected to the C and B terminals.

- If the key cannot be removed, the key interlock solenoid is OK.
- If the key can be removed, replace the steering lock assembly (key interlock solenoid is not available separately).

Shift Lock Solenoid Test/Replacement

Test:

1. Remove the center console panel and dashboard (see section 20).

2. Disconnect the 3P connector of the shift lock solenoid from the floor wire harness.

   NOTE: This solenoid has a diode in it. To get an accurate reading, either test it with a volt-ohmmeter that compensates for diodes, or make sure you connect your test leads to match the polarity shown.

3. Connect battery power to the A terminal and ground to the B terminal momentarily, and check to see if the solenoid works.

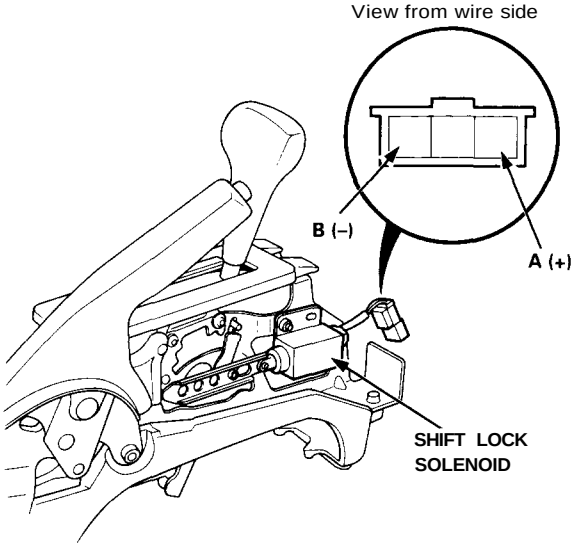

- If it does not work, replace it.
- If it works, go to step 3.

4. When the shift lock solenoid is ON, check that there is a clearance of 2.5 ± 0.5 mm (0.098 ± 0.020 in) between the top corner of the shift lock lever and the side of the lock pin.

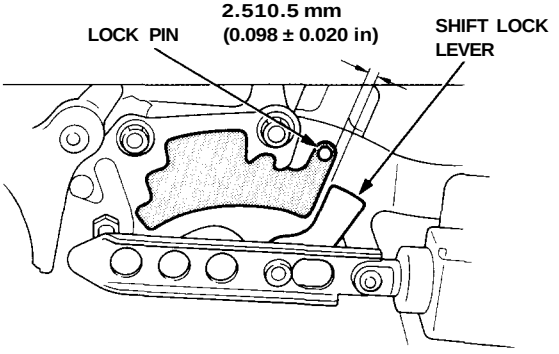

- If clearance is correct, go to the next step.
- If clearance is incorrect, loosen the self-locking nuts, and adjust the solenoid as needed.

5. When the shift lock solenoid is OFF, make sure that the lock pin is blocked by the top of the shift lock lever.

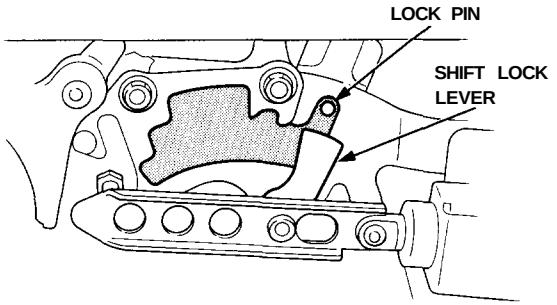

If it is not blocked, adjust the position of the shift lock solenoid as needed to block it.

Replacement:

1. Remove the E ring and the solenoid pin.

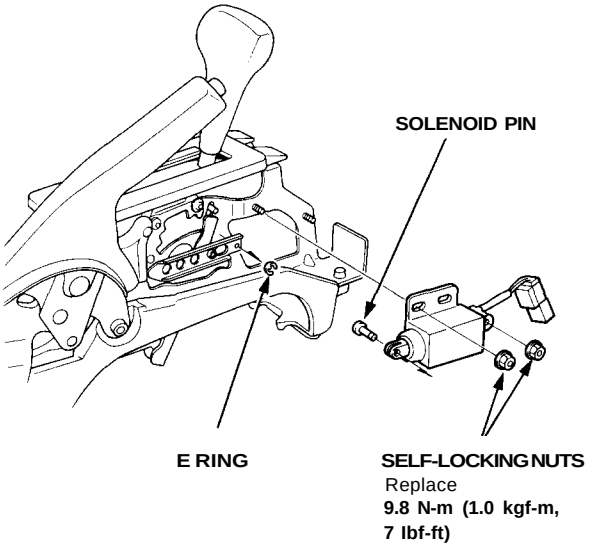

2. Remove the self-looking nuts and shift lock solenoid.

3. Install the new shift lock solenoid in the reverse order of removal.

4. Check the position of the shift lock solenoid as described in steps 3 and 4.

Parking Pin Switch Test/Replacement

1. Remove the center console panel and dashboard (see section 20).
2. Disconnect the 2P connector of the parking pin switch from the floor wire harness.
3. Check for continuity between the terminals in each switch lever position according to the table.

Position		Terminal A	Terminal B
Push button	Pressed	○	○
	Released		

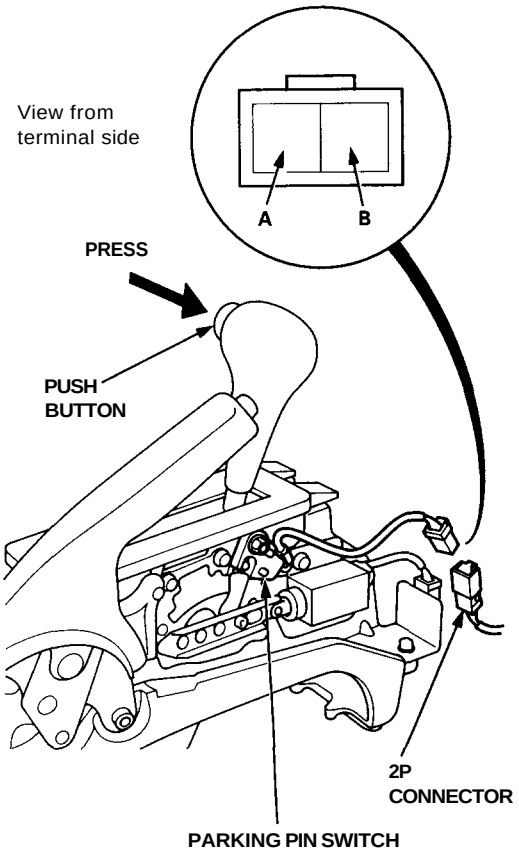

4. If necessary, replace the parking pin switch.
5. Remove the self-locking nut and parking pin switch.

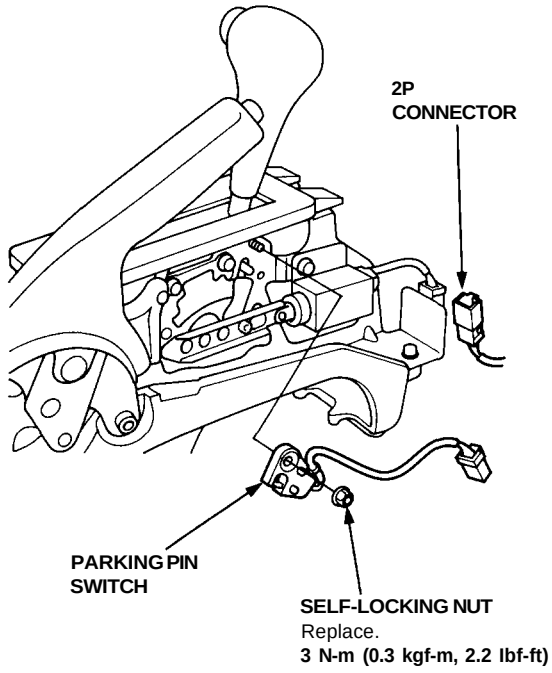

Safety Indicator

Component Location Index

SRS components are located in this area. Review the SRS component locations, precautions, and procedures in the SRS section 24 before performing repairs or service.

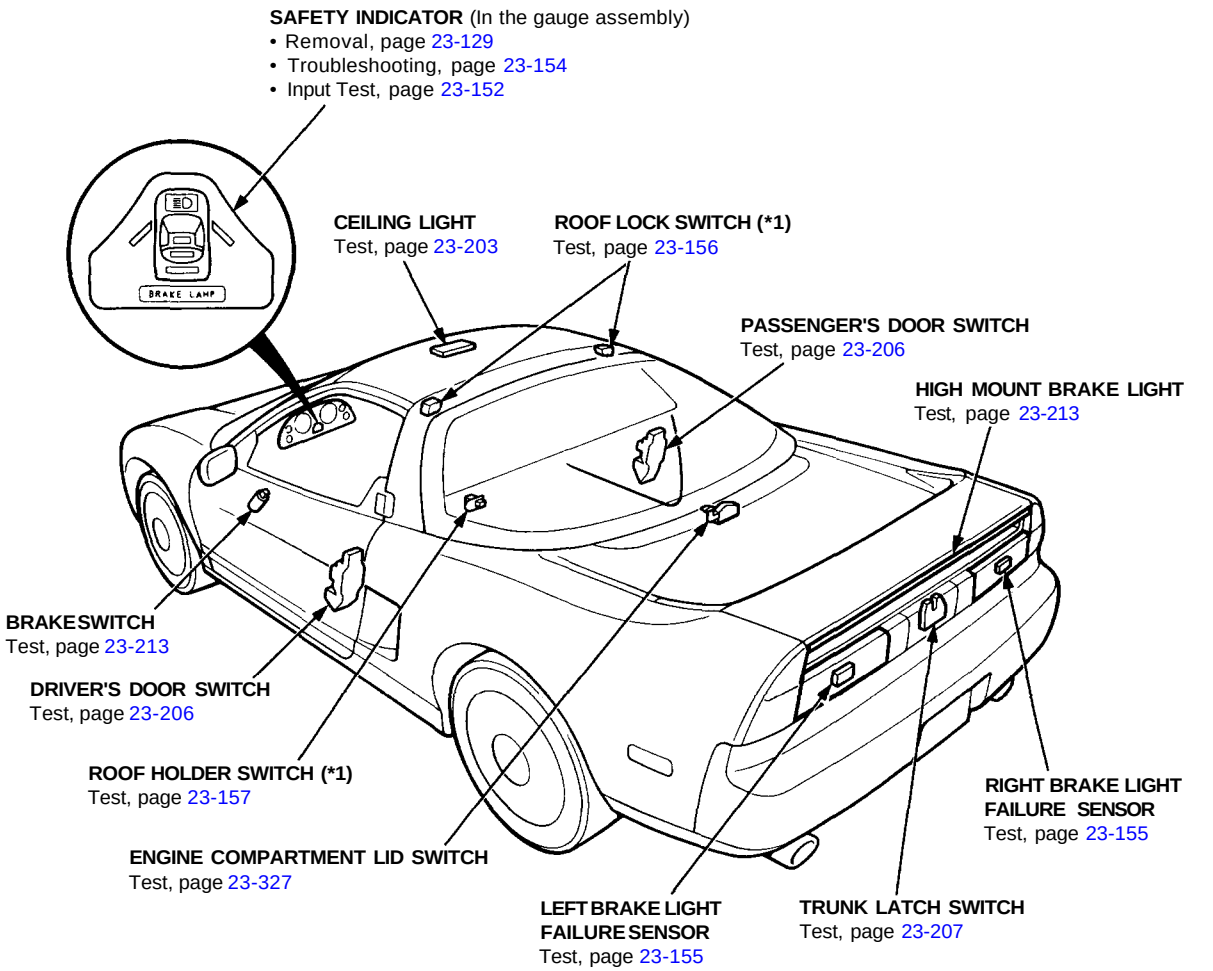

*1: NSX-T (open top) only

Description

Safety Indicator System:
LEDs are used to indicate when the trunk lid, engine compartment lid, a door, or the roof is not latched, or when a brake light is faulty, or when the roof is not stored or improperly stored in its holder. The LEDs will go on and stay on for about two seconds after the ignition switch has been turned ON (II) to show that the system circuit is functioning.

Brake Light Bulb Failure Indicator:
If all brake light bulbs are OK, the indicator light stays off because the ORN/WHT wire is grounded by the two brake light failure sensors connected in series. With the brake lights off, the ground is provided through the diode, the failure sensor relay coils, and bulb filaments. With the brake light on, all four relays (two in the left sensor, two in the right sensor), connected in series, supply ground. If any of the four bulbs is not working, the chain is broken and the ORN/WHT wire is not longer grounded. The indicator light comes on.

Safety Indicator

Indicator Input Test

SRS components are located in this area. Review the SRS component locations, precautions, and procedures in the SRS (section 24) before performing repairs or service.

Remove the dashboard lower cover, dashboard lower pad and instrument panel. Disconnect the connector "A" (30-P) from the gauge assembly (see page 23-127).

Inspect the connector and socket terminals to be sure they are all making good contact.

- If the terminals are bent, loose, or corroded, repair them as necessary, and recheck the system.
- If the terminals look OK, make the following input tests at the connector.
  — If a test indicates a problem, find and correct the cause, then recheck the system.
  — If all the input tests prove OK, the control unit must be faulty; replace it.

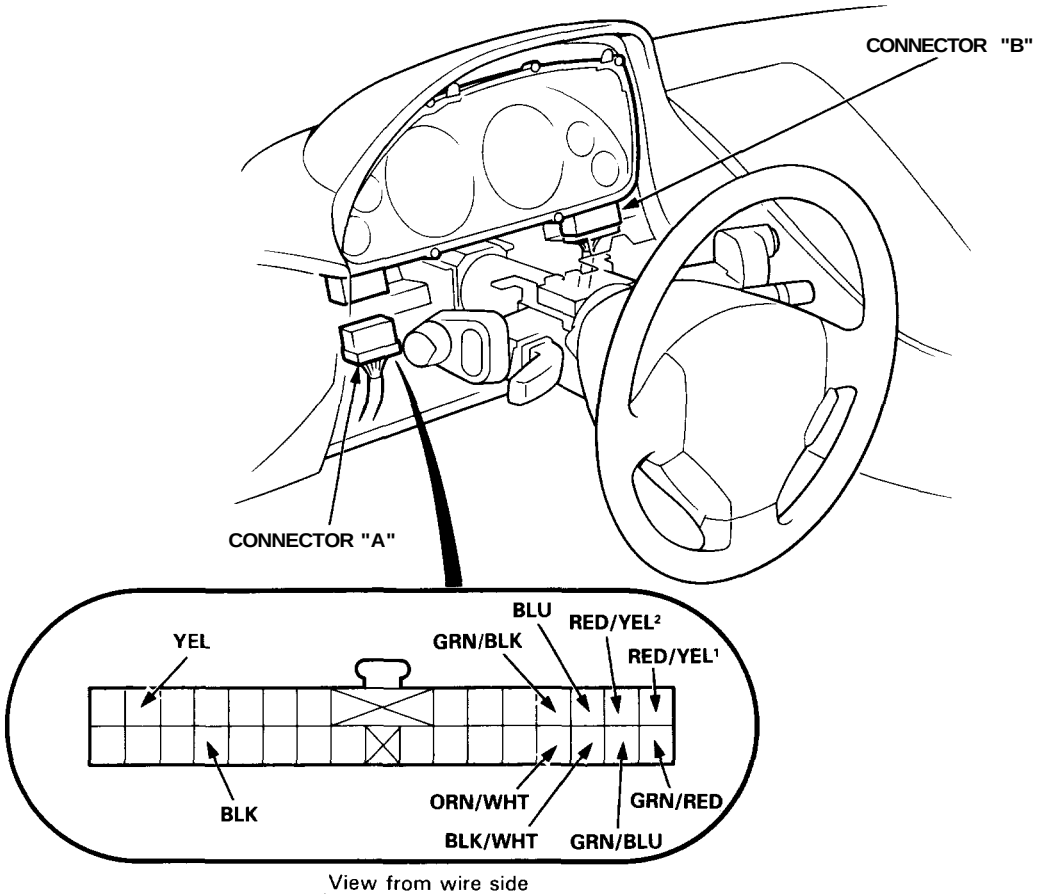

View from wire side

Wire	Test condition	Test: Desired result	Possible cause if result is not obtained
BLK	Under all conditions	Check for continuity to ground: There should be continuity.	• Poor ground (G401, G402, G403) • An open in the wire
YEL	Ignition switch ON (II)	Check for voltage to ground: There should be battery voltage.	• Blown No. 5 (15 A) fuse • An open in the wire
ORN/WHT	Brake pedal pushed	Check for continuity to ground: There should be less than 4 Ω with the pedal pushed.	• Blown No. 45 (20 A) fuse • Faulty brake switch • Blown brake light bulbs • Faulty brake light failure sensors • Poor ground (G551) • An open in the ORN/WHT or GRN/WHT wire
BLU	Engine compartment lid open	Check for continuity to ground: There should be continuity.	• Faulty engine compartment lid switch • Poor ground (G401, G402, G403) • An open in the wire
GRN/BLK	Trunk lid open	Check for continuity to ground: There should be continuity. NOTE: Before testing, remove the No. 34 (15 A) fuse.	• Faulty trunk latch switch • Poor ground (G551) • An open in the wire
GRN/BLU	Driver's door open	Check for continuity to ground: There should be continuity. NOTE: Before testing, remove the No. 34 (15 A) fuse.	• Faulty door switch • Poor ground (G401, G402, G403) • An open in the wire
GRN/RED	Passenger's door open		
BLK/WHT	Ceiling light switch in MIDDLE position	Connect to ground: The ceiling light should come on.	• Blown No. 34 (15 A) fuse • Faulty ceiling light • An open in the WHT/BLU or BLK/WHT wire
RED/YEL RED/YEL[1]	Retractable headlight sub-harness (left or right) disconnected	*[1] Connect battery power to the BLU/RED terminal (right retractor) or BLU terminal (left retractor); after about four seconds there should be battery voltage.	• Faulty retractable headlight control unit • Seized, damaged, or improperly installed retractor linkage
*[2] RED/YEL[2]	Roof unlatched or off	Check for continuity to ground: There should be continuity.	• Faulty roof holder switch • Faulty roof lock switches • Poor ground (G401, G402, G403) • An open in the RED/YEL[2] or BLU/GRN wire • An open in both the RED/GRN and RED/YEL[3] wires

*1: Terminal is in floor wire harness side of connector.

*2: NSX-T (open top) only

Safety Indicator

Troubleshooting

NOTE: The numbers in the table show the troubleshooting sequence.

Symptom \ Item to be inspected	Blown No. 5 (15 A) fuse (In the under-dash fuse box)	Safety indicator input	Safety indicator (diodes)	Brake light failure sensor	Door switch	Trunk latch switch	Retractable headlight control unit (see page 23-180)	Roof holder switch	Roof lock switches	Poor ground	Open circuit, loose or disconnected terminals
No indicator operates.	1	2								G401 G402 G403	YEL
Indicator lights fail to come on when ignition switch is turned to ON (II).		1									
Door indicator lights are not on with doors open.		2			1						GRN/BLU or GRN/RED
Trunk indicator light is not on with trunk lid open.		2				1					GRN/BLK
Brake indicator light is not on with blown brake light bulb.		1									ORN/WHT or GRN
Brake indicator light remains on with good brake light bulbs.		2		1						G551	
Ceiling light is not on with door open (with switch in MIDDLE position).			1								BLK/WHT
Retractor motor indicator light remains on with good retractor motor.		1					2				
Retractor motor indicator light is not on with faulty retractor motor.		1					2				RED/YEL or RED/YEL[1]
Roof warning light is not on with the roof unlatched or off*[1].		1						2	3		RED/YEL[2] BLU/GRN RED/GRN RED/YEL[3]

*1: NSX-T (open top) only

Brake Light Failure Sensor Test

1. First make sure the brake lights come on when the brake pedal is pressed.
   - If all the brake lights come on, go to step 2.
   - If one of the brake lights does not come on, check whether the bulb is blown. If the bulb is OK, go to step 2.
   - If none of the brake lights come on, check the brake light circuit.
2. Open the trunk lid, and remove the trim panel that covers the right taillight. Watch the BRAKE LAMP light in the safety indicator when the A (WHT/GRN) wire of the 6P connector is grounded and the ignition switch is turned from OFF to ON (II).

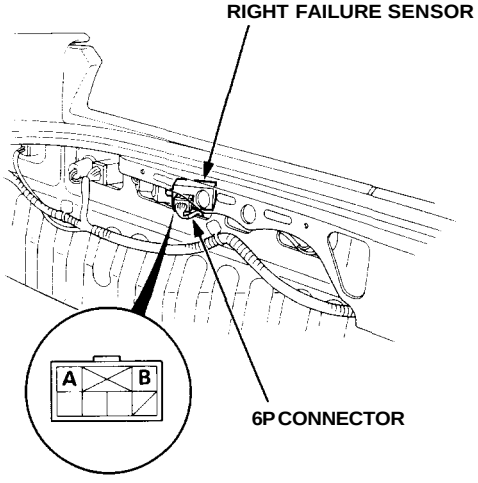

View from wire side

   - If the BRAKE LAMP light comes on and stays on, check for an open in the A (WHT/GRN) wire between the safety indicator and the right failure sensor.
   - If the BRAKE LAMP light does not stay on, go to step 3.
3. Watch the BRAKE LAMP light as you turn the ignition switch from OFF to ON (II) with the B (GRN) wire of the 6P connector grounded and the brake pedal pressed.
   - If the BRAKE LAMP light comes on and stays on, replace the right failure sensor.
   - If the BRAKE LAMP light does not stay on, go to step 4.
4. Remove the rear trim panel that covers the left taillight. Watch the BRAKE LAMP light as you turn the ignition switch from OFF to ON (II) with the A (GRN) wire of the 6P connector grounded and the brake pedal pressed.

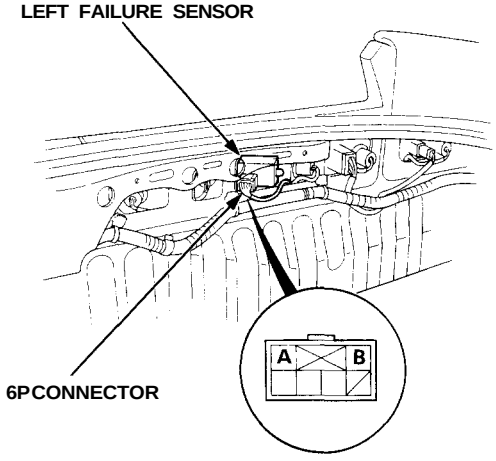

View from wire side

   - If the BRAKE LAMP light comes on and stays on, there is an open in the A (GRN) wire between the left failure sensor and the right failure sensor.
   - If the BRAKE LAMP light does not stay on, go to step 5.
5. Watch the BRAKE LAMP light as you turn the ignition switch from OFF to ON (II) with the B (BLK) wire of the 6P connector grounded and the brake pedal pressed.
   - If the BRAKE LAMP light comes on and stays on, replace the left failure sensor.
   - If the BRAKE LAMP light does not stay on, check for an open in the B (BLK) wire between the left failure sensor and ground, and check for a poor ground at G551.

Safety Indicator (NSX-T "open top")

Roof Lock Switch Test

1. Remove the headliner (see section 20).
2. Disconnect the 3P connector from the roof lock switch.

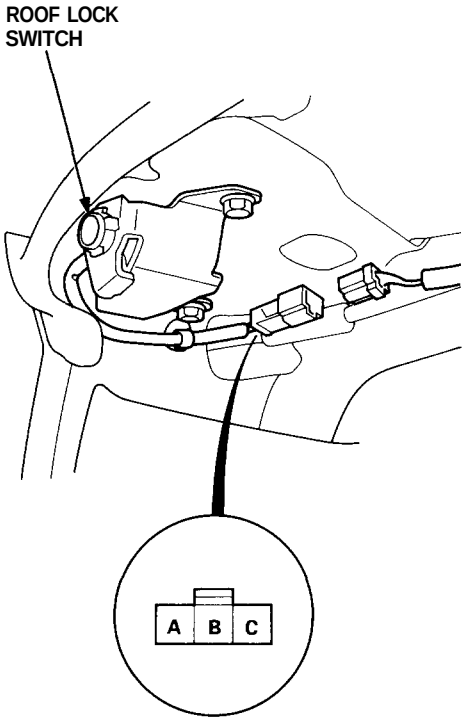

View from wire side

3. There should be continuity between the A and B terminals with the switch released (roof unlatched or off).
4. There should be no continuity with the switch pushed (roof latched).

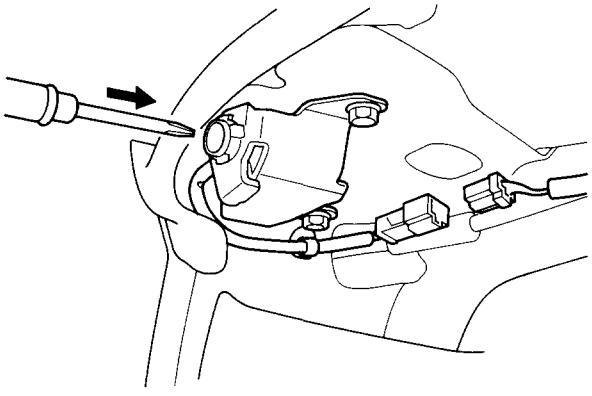

Roof Holder Switch Test

1. Open the rear hatch and engine cover.
2. Disconnect the 1P connector from the roof holder switch.
3. There should be continuity between the A and B terminals with the switch released (roof not stored).
4. There should be no continuity with the switch pushed (roof stored).

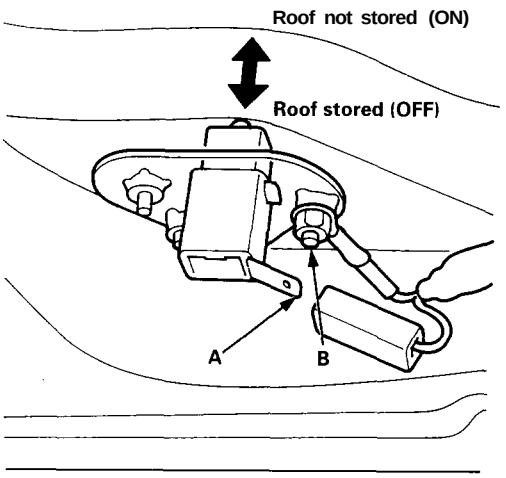

A/T Gear Position Indicator

Component Location Index

SRS components are located in this area. Review the SRS component locations, precautions, and procedures in the SRS (section 24) before performing repairs or service.

NOTE: For 3/M indicator troubleshooting, refer to section 14.

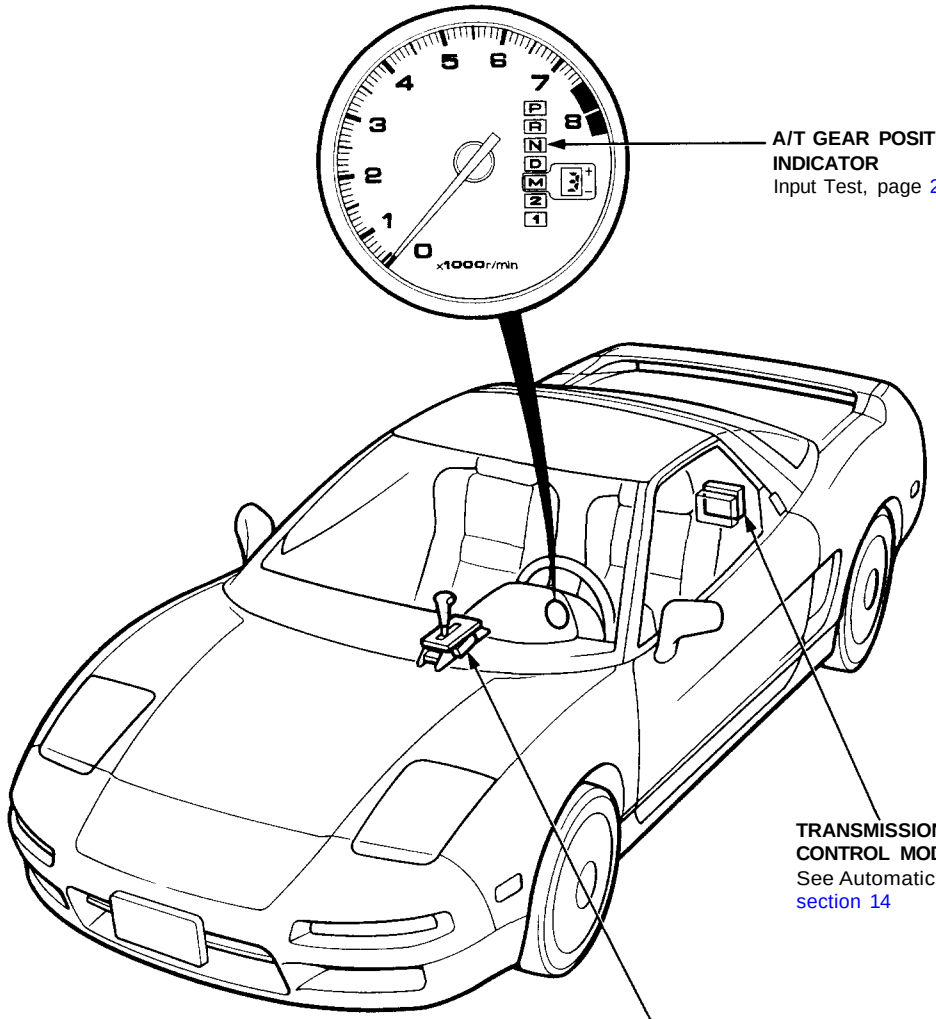

A/T Gear Position Indicator

Indicator Input Test

SRS components are located in this area. Review the SRS component locations, precautions, and procedures in the SRS (section 24) before performing repairs or service.

Remove the dashboard lower cover, dashboard lower pad and instrument panel. Disconnect the connector "A" (30P) from the gauge assembly (see page 23-127).

Inspect the connector and socket terminals to be sure they are all making good contact.

- If the terminals are bent, loose, or corroded, repair them as necessary, and recheck the system.
- If the terminals look OK, make the following input tests at the connector.
  - — If a test indicates a problem, find and correct the cause, then recheck the system.
  - — If all the input tests prove OK, the control unit must be faulty; replace it.

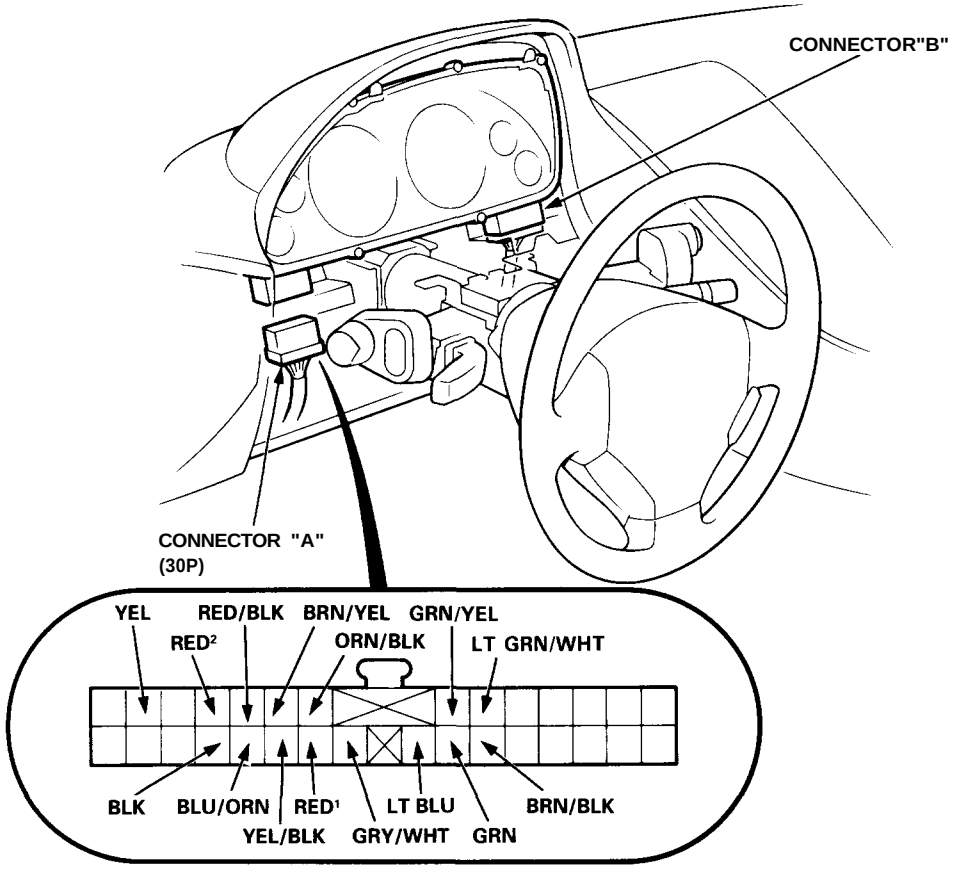

View from wire side

Wire	Test condition	Test: Desired result	Possible cause if result is not obtained
BLK	Under all conditions	Check for continuity to ground: There should be continuity.	• Poor ground (G401, G402, G403) • An open in the wire
YEL	Ignition switch ON (II)	Check for voltage to ground: There should be battery voltage.	• Blown No. 5 (15 A) fuse • An open in the wire
GRY/WHT	Shift lever in position [P] NOTE: Don't push the brake pedal.	Check for continuity to ground: There should be continuity. There should be no continuity in any other position.	• Faulty A/T gear position switch • Poor ground (G401, G402, G403) • An open in the wire
LTBLU	Shift lever in position [R]		
GRN	Shift lever in position [N]		
BRN/BLK	Shift lever in position [3/M]		
GRN/YEL	Shift lever in position [2]		
LT GRN/ WHT	Shift lever in position [1]		
RED/BLK and RED[2]	Combination light switch ON and dash lights brightness control dial on full bright	Check for voltage between the RED/BLK and RED[2] terminals: There should be battery voltage.	• Faulty dash lights brightness control system • An open in the wire
YEL/BLK	Ignition switch ON (II) and shift lever in any position except [D]	Check for voltage to ground: There should be battery voltage for two seconds after the ignition switch is turned ON (II), and less than 1 V two seconds later.	• Faulty [D] switch • Faulty A/T gear position switch • Faulty transmission control module (TCM) • An open in the wire
RED[1]	Ignition switch ON (II)	Check for voltage to ground: There should be more than 11V.	• Faulty ECM and transmission control module (TCM) • An open in the wire

A/T Gear Position Indicator

A/T Gear Position Switch Test

SRS components are located in this area. Review the SRS component locations, precautions, and procedures in the SRS (section 24) before performing repairs or service.

1. Remove the center console panel and dushboard (see section 20).

2. Disconnect the 12P and 2P connectors from the A/T gear position switch.

3. Check for continuity between the terminals in each switch position according to the table.

   - Move the lever back and forth at each switch position without touching the push button, and check for continuity within the range of free play.
   - If there is no continuity within the range of free play, adjust the position of the switch as described below.

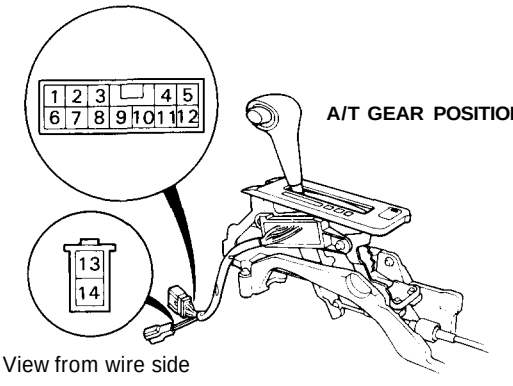

View from wire side

A/T Gear Position Switch

Position \ Terminal	8	1	2	3	4	5	6	7	11	Back-up Light Switch 9	Back-up Light Switch 10	Neutral Position Switch 13	Neutral Position Switch 14
1	○				○								
2	○			○		○							
3/M	○		○			○							
D	○	○				○							
N	○						○					○	○
R	○							○		○	○		
P	○								○			○	○

Adjustment:

1. Shift to [P] position, and loosen the bolts.

2. Slide the switch in the direction of [P] position [within 2.0 mm (0.08 in)] until there is continuity between No. 8 and No. 11 terminals in the range of free play of the shift lever.

3. Recheck for continuity between each of the terminals.

   NOTE:
   - If adjustment is not possible, check for damage to the shift lever detent and/or bracket. If there is no damage, replace the A/T gear position switch.
   - You should be able to start the engine with the shift lever in position [N], within the range of free play.

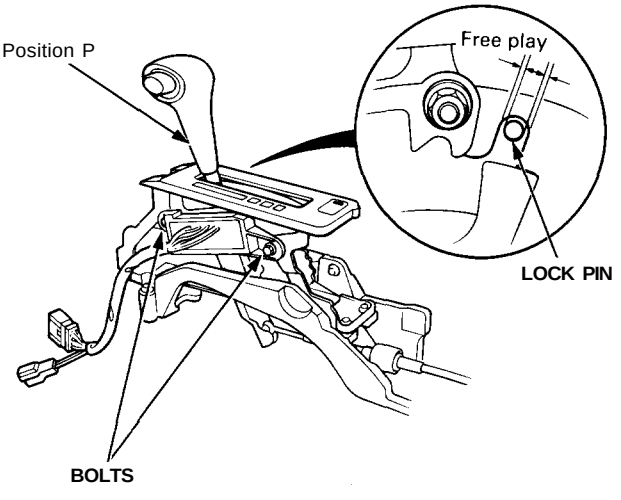

A/T Gear Position Switch Replacement

SRS components are located in this area. Review the SRS component locations, precautions, and procedures in the SRS section 24 before performing repairs or service.

1. Remove the center console panel and dashboard (see section 20).
2. Disconnect the 12P and 2P connectors from the A/T gear position switch.

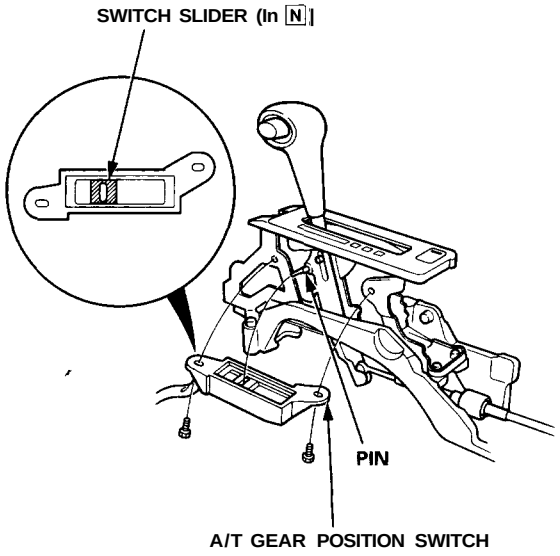

3. Remove the two position switch mounting bolts.
4. Position the slider on the new switch to N as shown above.
5. Shift the shift lever to N, then slip the switch into position.
6. Attach the switch with the two bolts.
7. Test the switch in the P and N positions. You should be able to start the engine with the shift lever in position N anywhere in the range of free play.
8. Connect the 12P and 2P connectors, clamp the harness, and install the dashboard and center console panel.

Bulb Replacement

SRS components are located in this area. Review the SRS component locations, precautions, and procedures in the SRS section 24 before performing repairs or service.

1. Remove the gauge assembly (see page 23-126).
2. Disassemble the gauge assembly (see page 23-129).
3. Remove the bulb from printed circuit board B.

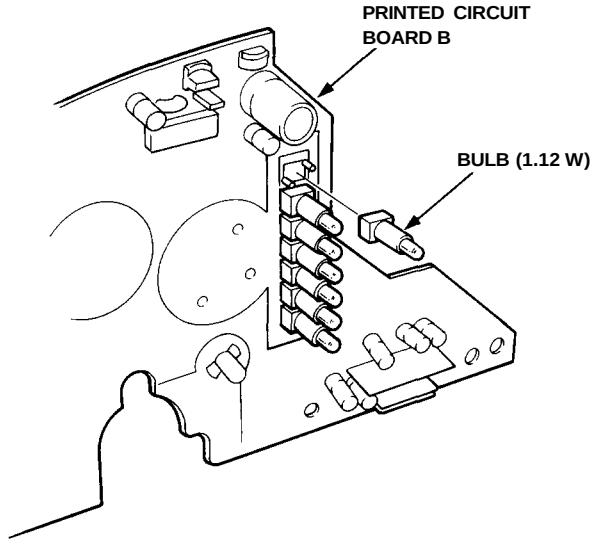

4. Install the indicator in the reverse order of removal.

Integrated Control Unit

Input Test

SRS components are located in this area. Review the SRS component locations, precautions, and procedures in the SRS section 24 before performing repairs or service.

Remove the left kick panel cover, and the relay holder from its bracket, then disconnect the 16-P connector from the integrated control unit. Remove the integrated control unit from the under-dash fuse box.

Inspect the connector and socket terminals to be sure they are all making good contact.

- If the terminals are bent, loose, or corroded, repair them as necessary, and recheck the system.
- If the terminals look OK, make the following input tests at the connector.
  - — If any test indicates a problem, find and correct the cause, then recheck the system.
  - — If all the input tests prove OK, the control unit must be faulty; replace it.

NOTE: Different wires with the same color have been given a number suffix to distinguish them (for example, YEL[1] and YEL[2] are not the same).

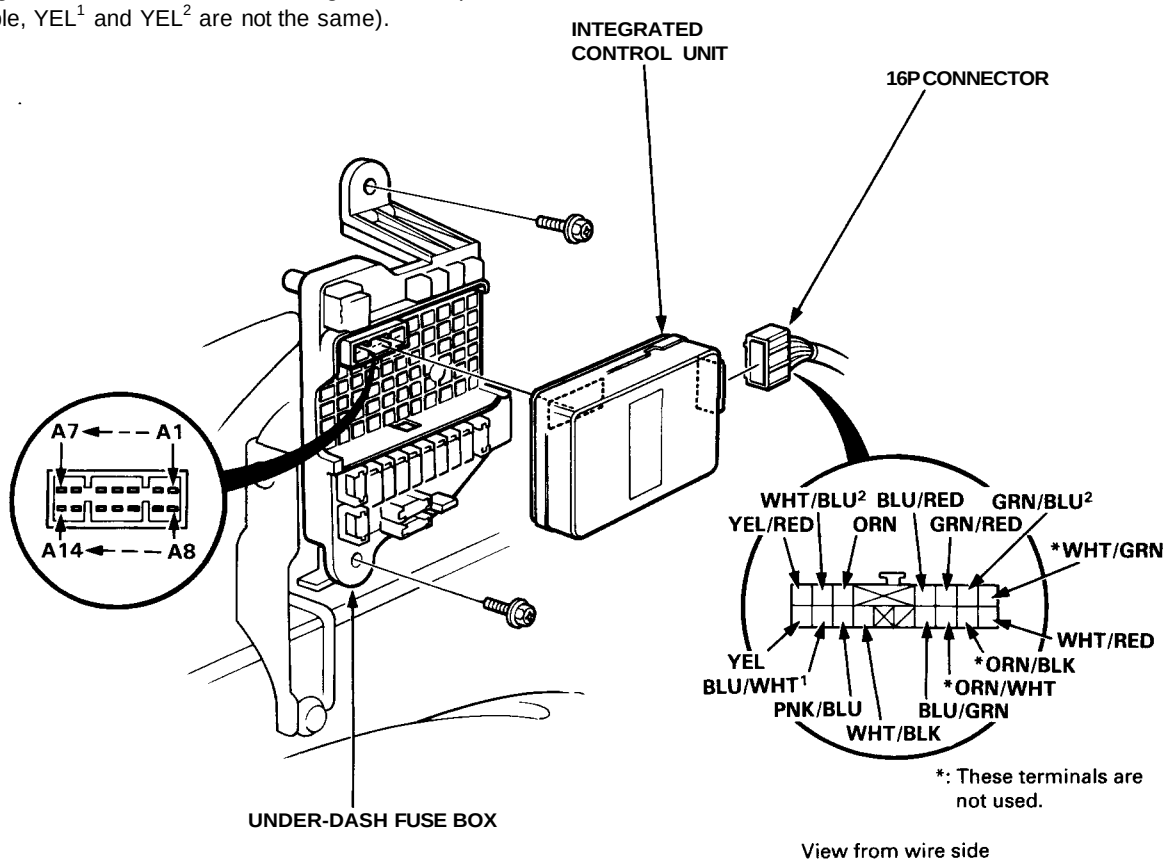

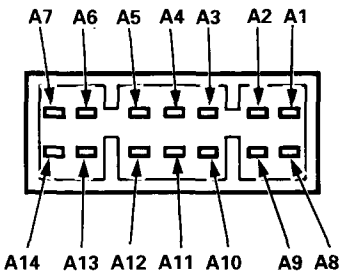

Fuse box socket

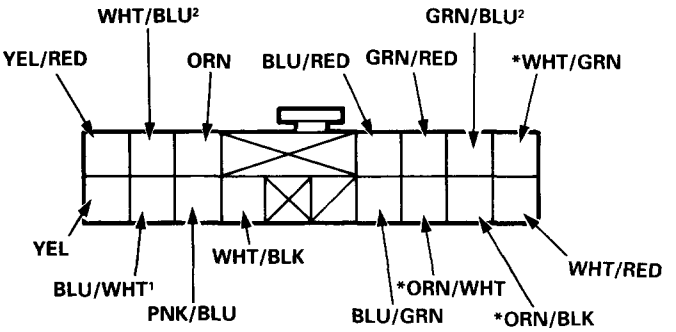

View from wire side
*: These terminals are not used.

Entry Light Timer System:

Terminal	Test condition	Test: Desired result	Possible cause if result is not obtained
A8	Under all conditions	Check for continuity to ground: There should be continuity.	• Poor ground (G401, G402, G403) • An open in the wire
A9	Under all conditions	Check for voltage to ground: There should be battery voltage.	• Blown No. 34 (15 A) fuse • An open in the wire
WHT/BLK	Under all conditions	Attach to ground: Foot well light should come on.	• Blown bulb or No. 34 (15 A) fuse • An open in the wire
GRN/BLU²	Driver's door open	Check for voltage to ground: There should be 1 V or less.	• Faulty driver's door switch • Poor ground (G401, G402, G403) • An open in the wire

Key-in Reminder System:

Terminal	Test condition	Test: Desired result	Possible cause if result is not obtained
A8	Under all conditions	Check for continuity to ground: There should be continuity.	• Poor ground (G401, G402, G403) • An open in the wire
A9	Under all conditions	Check for voltage to ground: There should be battery voltage.	• Blown No. 34 (15 A) fuse • An open in the wire
GRN/BLU²	Driver's door open	Check for voltage to ground: There should be 1 V or less.	• Faulty driver's door switch • Poor ground (G401, G402, G403) • An open in the wire
BLU/GRN	Ignition key is inserted all the way into the ignition switch	Check for voltage to ground: There should be 1 V or less.	• Faulty ignition key switch • Poor ground (G401, G402, G403) • An open in the wire

(cont'd)

Integrated Control Unit

Input Test (cont'd)

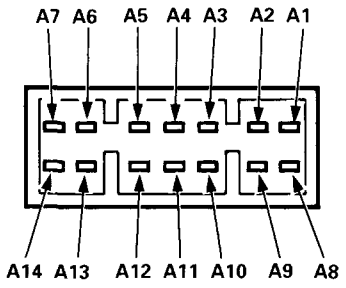

Fuse box socket

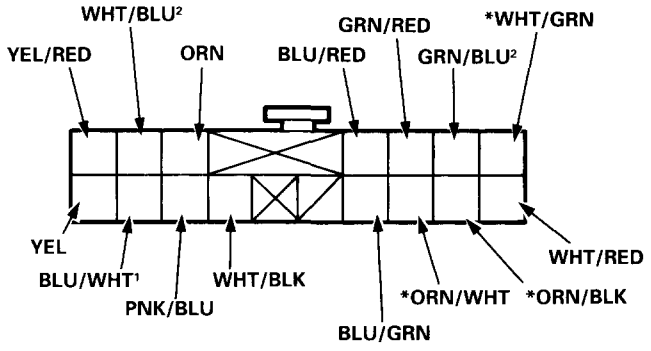

View from wire side
*: These terminals are not used.

Lights-on Reminder System:

Terminal	Test condition	Test: Desired result	Possible cause if result is not obtained
A8	Under all conditions	Check for continuity to ground: There should be continuity.	• Poor ground (G401, G402, G403) • An open in the wire
A9	Under all conditions	Check for voltage to ground: There should be battery voltage.	• Blown No. 34 (15 A) fuse • An open in the wire
A5	Ignition switch ON (II)	Check for voltage to ground: There should be battery voltage.	• Blown No. 5(15 A) fuse • An open in the wire
GRN/BLU²	Driver's door open	Check for voltage to ground: There should be 1 V or less.	• Faulty driver's door switch • Poor ground (G401, G402, G403) • An open in the wire
A6	Headlight switch ON	Check for voltage to ground: There should be battery voltage.	• Blown No. 38(15 A) fuse • Faulty headlight switch • Faulty taillight relay • An open in the wire
ORN	Connect the A9 terminal to the ORN terminal	Check chime operation: Chime should activate each time the battery is connected.	• Faulty chime • Poor ground (G401, G402, G403) • An open in the wire

Seat Belt Reminder System:

Terminal	Test condition	Test: Desired result	Possible cause if result is not obtained
A8	Under all conditions	Check for continuity to ground: There should be continuity.	• Poor ground (G401, G402, G403) • An open in the wire
A9	Under all conditions	Check for voltage to ground: There should be battery voltage.	• Blown No. 34 (15 A) fuse • An open in the wire
A5	Ignition switch ON (II)	Check for voltage to ground: There should be battery voltage.	• Blown No. 5 (15 A) fuse • An open in the wire
A13	Ignition switch ON (II) and driver's seat belt not buckled	Check for voltage to ground: There should be 1 V or less.	• Faulty seat belt switch • Poor ground (G401, G402, G403) • An open in the wire

Rear Window Defogger Timer System:

Terminal	Test condition	Test: Desired result	Possible cause if result is not obtained
A8	Under all conditions	Check for continuity to ground: There should be continuity.	• Poor ground (G401, G402, G403) • An open in the wire
A9	Under all conditions	Check for voltage to ground: There should be battery voltage.	• Blown No. 34 (15 A) fuse • An open in the wire
A5	Ignition switch ON (II)	Check for voltage to ground: There should be battery voltage.	• Blown No. 5 (15 A) fuse • An open in the wire
WHT/RED	Defogger switch pushed	Check for continuity to ground: There should be continuity as the switch is pushed.	• Faulty defogger switch • Poor ground (G401, G402, G403) • An open in the wire
A10	Ignition switch ON (II)	Attach to ground: The rear window defogger should work and the defogger switch indicator light should come on.	• Blown No. 4 (15 A) fuse • Faulty defogger relay • Blown bulb • An open in the wire

Oil Pressure Indicator System:

Terminal	Test condition	Test: Desired result	Possible cause if result is not obtained
A8	Under all conditions	Check for continuity to ground: There should be continuity.	• Poor ground (G401, G402, G403) • An open in the wire
A9	Under all conditions	Check for voltage to ground: There should be battery voltage.	• Blown No. 34 (15 A) fuse • An open in the wire
A5 [1]	Ignition switch ON (II)	Check for voltage to ground: There should be battery voltage.	• Blown No. 5 (15 A) fuse • An open in the wire
WHT/BLU [2]	Engine running	Check for voltage to ground: There should be battery voltage.	• Faulty charging system • An open in the wire
YEL/RED	Ignition switch OFF	Check for continuity to ground: There should be continuity.	• Faulty engine oil pressure switch • An open in the wire
	Ignition switch ON (II)	Check indicator light operation. If the light does not come on, attach the YEL/RED terminal to ground: The light should come on as the ignition switch is turned ON (II).	• Blown bulb • An open in the wire
	Start the engine.	Check for voltage to ground: There should be battery voltage.	• Insufficient oil • Improper lubrication • Faulty engine oil pressure switch

(cont'd)

Integrated Control Unit

Input Test (cont'd)

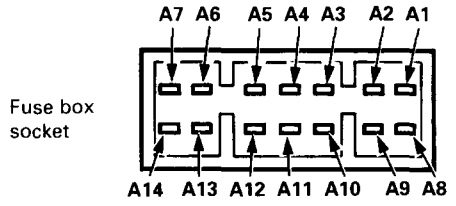

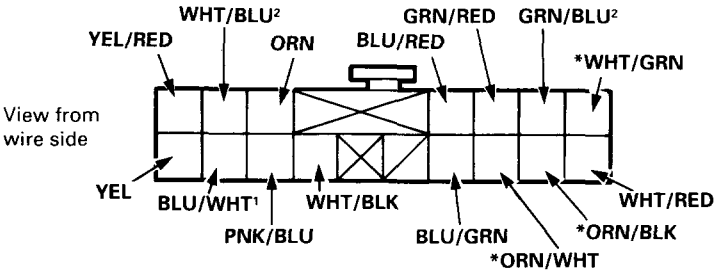

*: These terminals are not used.

Side Marker Light Flasher System:

Terminal	Test condition	Test: Desired result	Possible cause if result is not obtained
A8	Under all conditions	Check for continuity to ground: There should be continuity.	• Poor ground (G401, G402, G403) • An open in the wire
A9	Under all conditions	Check for voltage to ground: There should be battery voltage.	• Blown No. 34 (15 A) fuse • An open in the wire
A5	Ignition switch ON (II)	Check for voltage to ground: There should be battery voltage.	• Blown No. 5 (15 A) fuse • An open in the wire
A6	Headlight switch ON (II)	Check for voltage to ground: There should be battery voltage.	• Blown No. 38 (15 A) fuse • Faulty headlight switch • Faulty taillight relay • An open in the wire
A11	Ignition switch ON (II) and turn signal switch in left position	Check for voltage to ground: It should change from 0 - 12 - 0 V repeatedly.	• Blown No. 46 (10 A) fuse • Faulty turn signal/hazard relay • An open in the wire
A3	Ignition switch ON (II) and turn signal switch in right position		
PNK/BLU	Connect the A9 terminal to the PNK/BLU (or BLU/WHT¹) terminal.	Check the front side marker lights: The left (or right) front side marker light should come on as the battery is connected.	• Blown bulb • Poor ground (G301) • An open in the wire
BLU/WHT			

Power Window Key-off Timer System:

Terminal	Test condition	Test: Desired result	Possible cause if result is not obtained
A8	Under all conditions	Check for continuity to ground: There should be continuity.	• Poor ground (G401, G402, G403) • An open in the wire
A9	Under all conditions	Check for voltage to ground: There should be battery voltage.	• Blown No. 34(15 A) fuse • An open in the wire
A5	Ignition switch ON (II)	Check for voltage to ground: There should be battery voltage.	• Blown No. 5 (15 A) fuse • An open in the wire
GRN/BLU²	Driver's door open	Check for voltage to ground: There should be 1 V or less.	• Faulty door switch • Poor ground (G401, G402, G403) • An open in the wire
GRN/RED	Passenger's door open		
A14	Connect the A9 terminal to the A14 terminal.	Check window operation: The power windows should work with the key OFF.	• Faulty power window relay • Poor ground (G201) • An open in the wire

Combined Operation Wiper/Washer System:

Terminal	Test condition	Test: Desired result	Possible cause if result is not obtained
A8	Under all conditions	Check for continuity to ground: There should be continuity.	• Poor ground (G401, G402, G403) • An open in the wire
A9	Under all conditions	Check for voltage to ground: There should be battery voltage.	• Blown No. 34 (15 A) fuse • An open in the wire
A5	Ignition switch ON (II)	Check for voltage to ground: There should be battery voltage.	• Blown No. 5 (15 A) fuse • An open in the wire
BLU/RED	Ignition switch ON (II)	Check for voltage to ground: There should be battery voltage.	• Blown No. 26 (40 A) fuse • Faulty wiper intermittent relay • An open in the wire
YEL	Ignition switch ON (II) and wiper switch at INT position	Check for voltage to ground: There should be battery voltage.	• Blown No. 6 (7.5 A) fuse • Faulty wiper switch • An open in the wire
A4	Ignition switch ON (II) and washer switch pushed	Check for voltage to ground: There should be battery voltage.	• Blown No. 6(7.5 A) fuse • Faulty washer switch • An open in the wire
A1 and A2	Intermittent dwell time control ring turned	Check for resistance between the A1 and A2 terminals: It should vary from 0 to 28,000 ohms as the ring is turned.	• Faulty intermittent dwell time controller • An open in the wire
A7	Ignition switch ON (II) and wiper switch OFF	Check for voltage to ground: There should be battery voltage.	• Blown No. 26 (40 A) fuse • Faulty wiper motor (automatic-stop circuit) • An open in the wire

Lights-on Reminder System

Chime Test

NOTE: Refer to page 23-168 for the input test of the lights-on reminder circuit.

When the ignition key is turned off and removed with the lights on, voltage is applied to the reminder circuit in the integrated control unit. When you open the driver's door, the circuit senses ground through the closed door switch. With voltage at the "A6" terminal, ground at the "GRN/BLU[2]" terminal, and no voltage at the "A5" terminal, the chime sounds to remind the driver to turn off the lights.

1. Remove the dashboard lower cover, and disconnect the connectors.

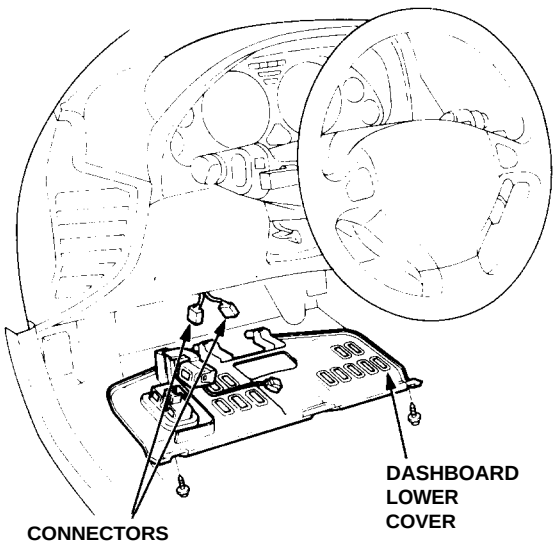

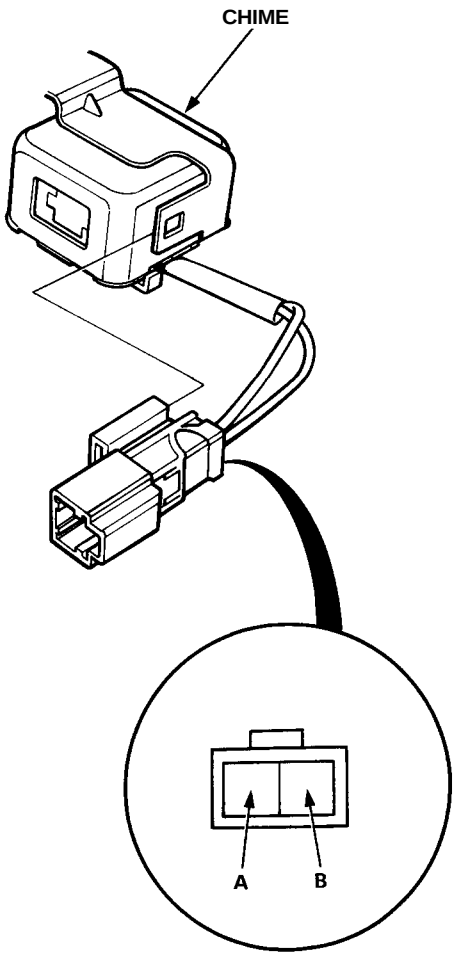

View from wire side

2. Test the chime by connecting battery power to the "B" terminal, and ground to the "A" terminal, and cycling the power on-off repeatedly.

3. If the chime fails to sound every time power is cycled, replace it.

Key-in Reminder System

Ignition Key Switch Test

NOTE: Refer to page 23-167 for the input test of the key -in reminder beeper circuit.

When the ignition key is not removed, the key-in reminder in the integrated control unit senses ground through the closed ignition key switch. When you open the driver's door, the reminder circuit senses ground through the closed door switch. With ground at the "BLU/GRN" and "GRN/BLU[2]" terminals, the beeper sounds.

1. Remove the dashboard lower cover, and disconnect the floor wire harness connectors.

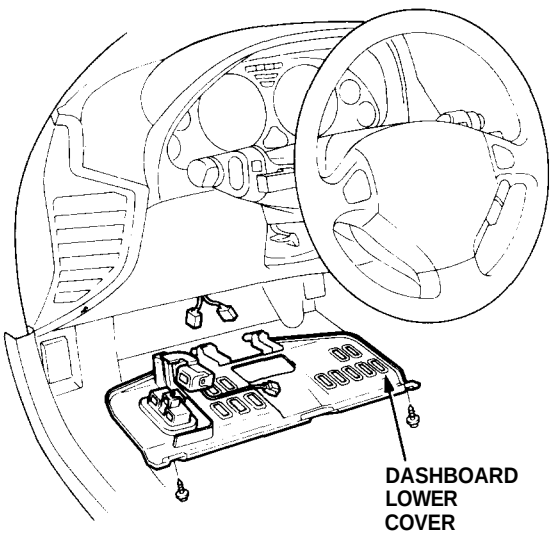

3. Disconnect the 8P connector from the floor wire harness.

4. There should be continuity between the No. 8 and No. 7 terminals when the ignition key is inserted. There should be no continuity with the ignition key removed.

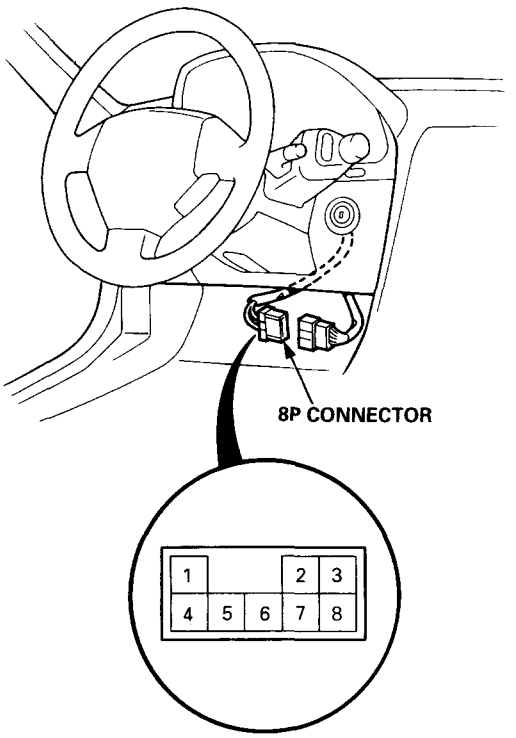

View from wire side

Component Location Index

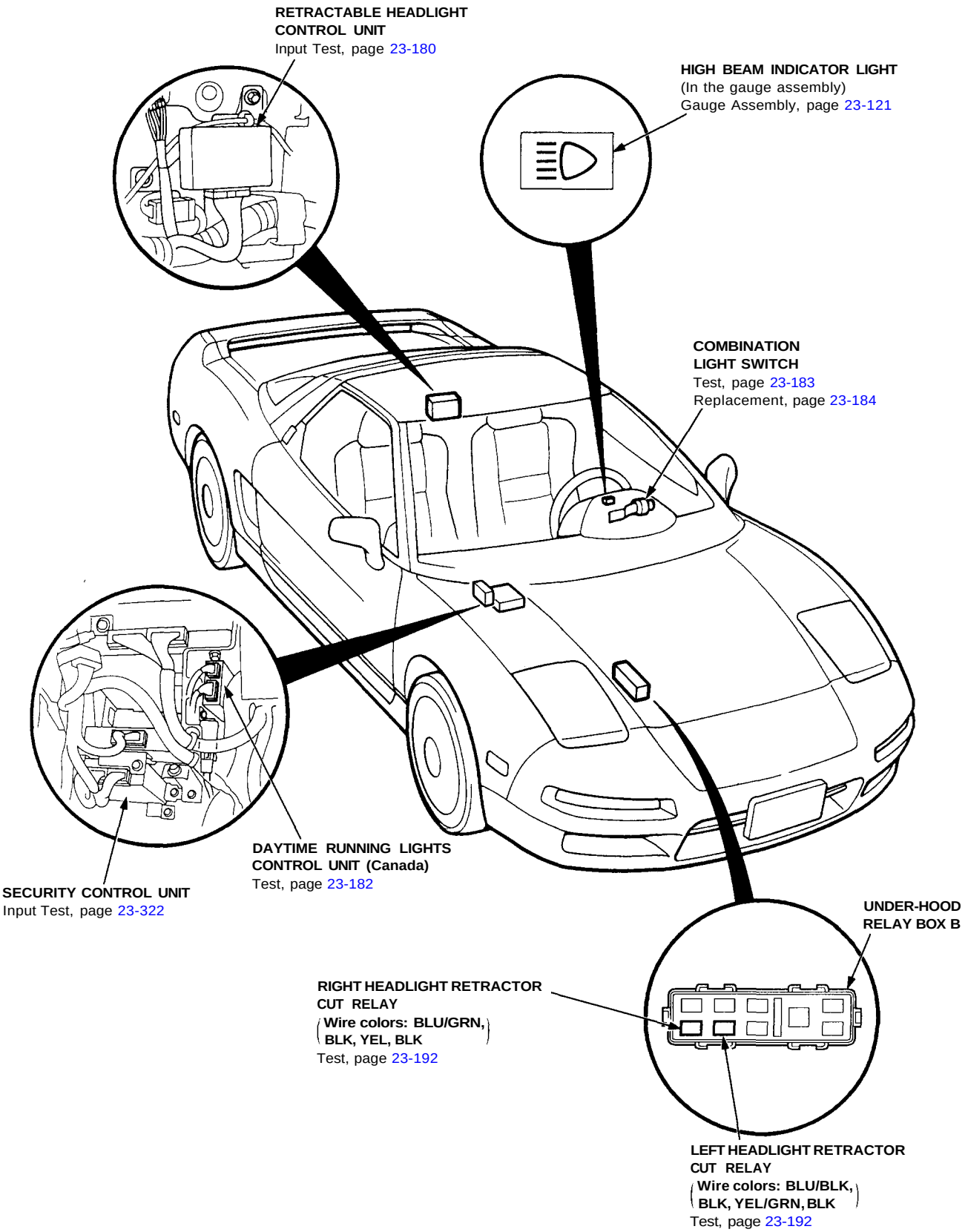

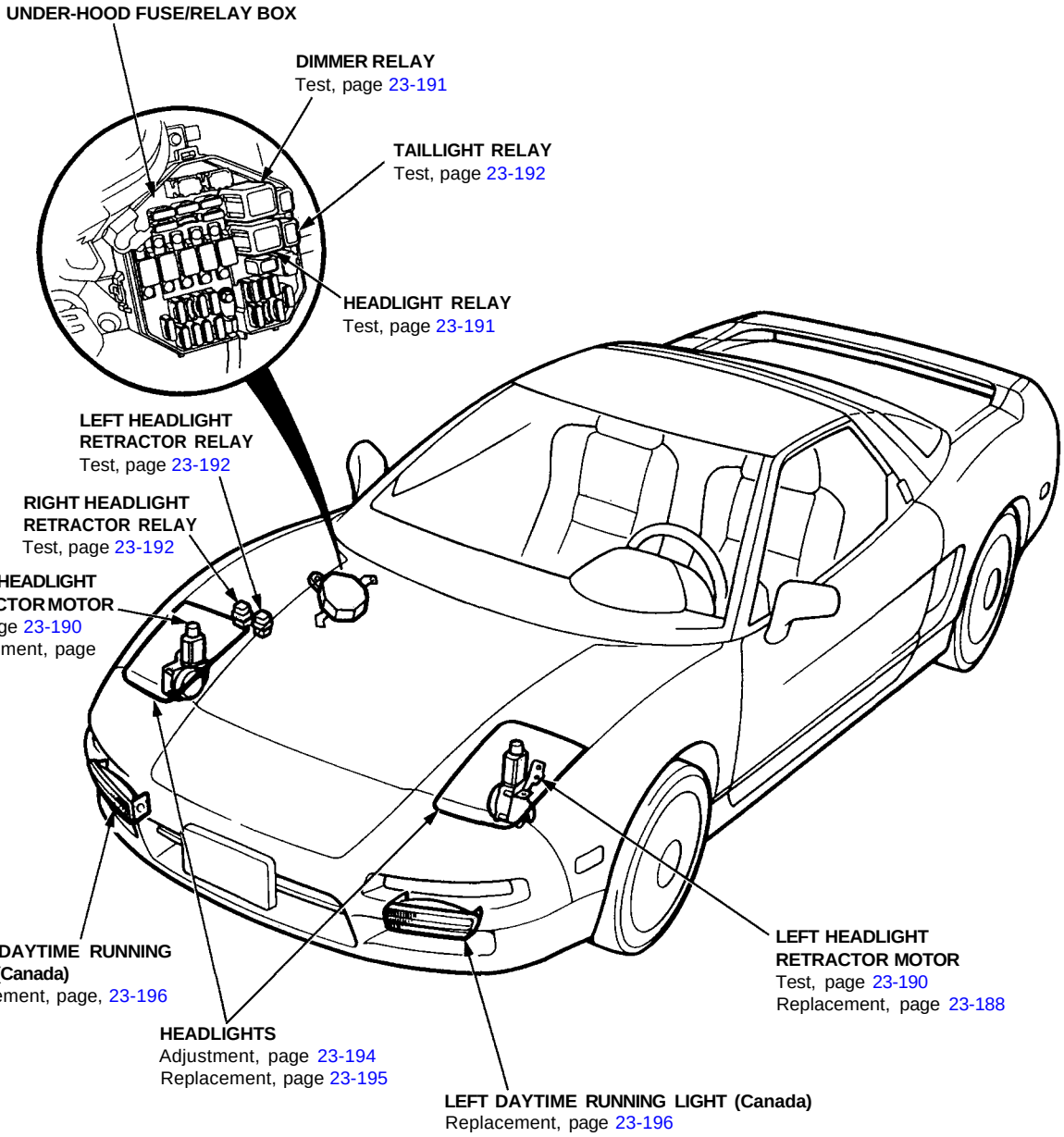
UNDER-HOOD FUSE/RELAY BOX
DIMMER RELAY
Test, page 23-191
TAILLIGHT RELAY
Test, page 23-192
HEADLIGHT RELAY
Test, page 23-191
LEFT HEADLIGHT RETRACTOR RELAY
Test, page 23-192
RIGHT HEADLIGHT RETRACTOR RELAY
Test, page 23-192
RIGHT HEADLIGHT RETRACTOR MOTOR
Test, page 23-190
Replacement, page 23-188
RIGHT DAYTIME RUNNING LIGHT (Canada)
Replacement, page, 23-196
HEADLIGHTS
Adjustment, page 23-194
Replacement, page 23-195
LEFT DAYTIME RUNNING LIGHT (Canada)
Replacement, page 23-196
LEFT HEADLIGHT RETRACTOR MOTOR
Test, page 23-190
Replacement, page 23-188

Switches

The lighting system is controlled by five switches and the turn signal cancel unit.

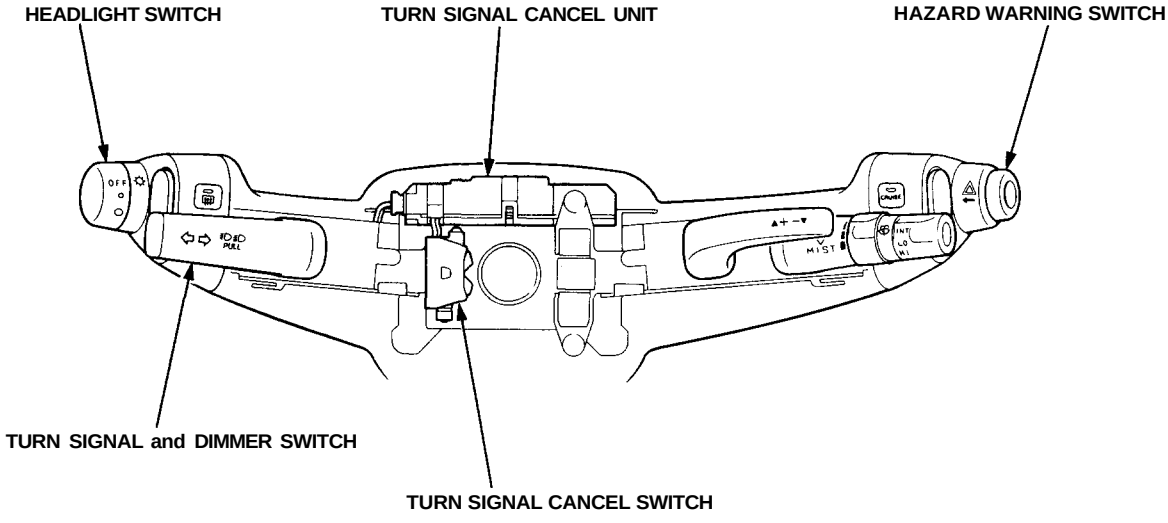

Retractable Headlight Control Unit Input Test

Remove the rear bulkhead panels, and disconnect the 18P connector from the control unit.
Inspect the connector and socket terminals to be sure they are all making good contact.

- If the terminals are bent, loose, or corroded, repair them as necessary, and recheck the system.
- If the terminals look OK, make the following input tests at the connector.
  - — If any test indicates a problem, find and correct the cause, then recheck the system.
  - — If all the input tests prove OK, the control unit must be faulty; replace it.

NOTE: Different wires with the same color have been given a number suffix to distinguish them (for example, RED/YEL[1] and RED/YEL[4] are not the same).

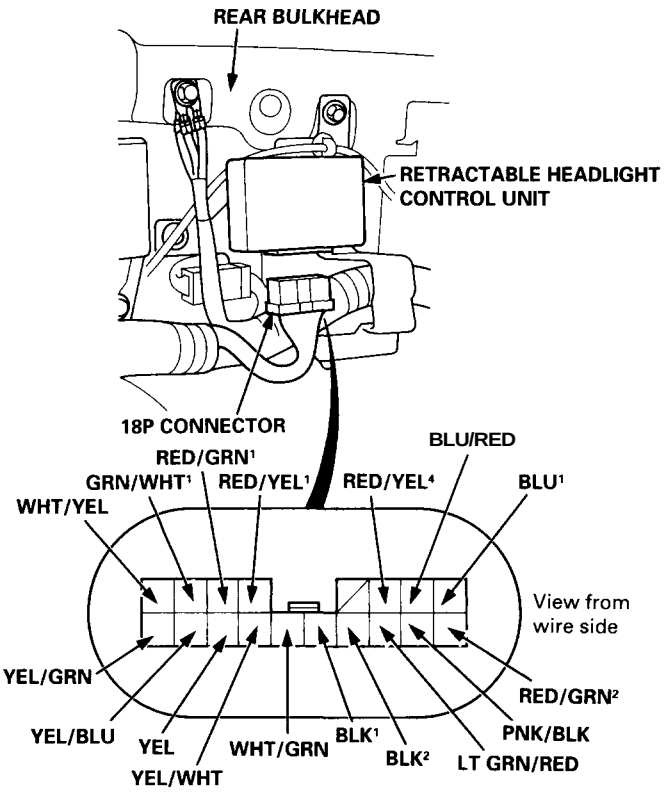

Wire	Test condition	Test: Desired result	Possible cause if result is not obtained
BLK[1]	Under all conditions	Check for continuity to ground: There should be continuity.	• Poor ground (G401, G402, G403) • An open in the wire
BLK[2]			• Poor ground (G401, G402, G403) • An open in the wire
RED/GRN[2]	Headlight switch OFF and retractor switch OFF	Check for voltage to ground: There should be battery voltage.	• Blown No. 42 (15 A) and No. 43 (15 A) fuses • Faulty retractor switch or headlight switch • An open in the wire
WHT/GRN	Retractor switch OFF	Check for voltage to ground: There should be battery voltage.	• Blown No. 42 (15 A) and No. 43 (15 A) fuses • Faulty retractor switch • An open in the wire
YEL/WHT	Retractor switch ON	Check for voltage to ground: There should be battery voltage.	• Blown No. 42 (15 A) and No. 43 (15 A) fuses • Faulty retractor switch • An open in the wire
PNK/BLK	Headlight switch "●" (headlights on)	Check for voltage to ground: There should be battery voltage.	• Blown No. 43 (15 A) fuse • Faulty headlight switch • An open in the wire
RED/YEL'	Headlight switch "●" (headlights on)	Check for voltage to ground: There should be battery voltage.	• Blown No. 52 (20 A) fuse • Faulty headlight relay or headlight switch • An open in the wire
RED/GRN[1]			• Blown No. 49 (20 A) fuse • Faulty headlight relay or headlight switch • An open in the wire

Wire	Test condition	Test: Desired result	Possible cause if result is not obtained
LT GRN/ RED	Passing switch ON	Check for voltage to ground: There should be battery voltage.	• Faulty headlight relay or passing switch • An open in the wire
BLU/RED	Retractor motor stationary	Check for voltage to ground: There should be battery voltage.	• Blown No. 42 (15 A) fuse • Faulty right retractor relay • An open in the wire
BLU[1]			• Blown No. 43 (15 A) fuse • Faulty left retractor relay • An open in the wire
YEL	Under all conditions	Check for continuity to ground: There should be continuity.	• Faulty right retractor cut relay • Poor ground (G202) • An open in the wire
YEL/GRN			• Faulty left retractor cut relay • Poor ground (G202) • An open in the wire
RED/YEL[4]	Ignition switch ON (II)	Connect battery power: The retractable headlight malfunction indicator should come on.	• Faulty safety indicator circuit • An open in the wire
WHT/YEL • GRN/WHT[1] (YEL/BLU)	Headlight retractor switch OFF (retractable headlight closed) Connect an ohmmeter with the negative lead to the WHT/YEL terminal, and the positive lead to the GRN/WHT (orYEL/BLU) terminal.	Check that there is no continuity between the WHT/YEL and the GRN/WHT (or YEL/BLU) terminals.	• Faulty headlight retractor motor
	Raise the headlights halfway by turning the retractor knob clockwise.	Check for continuity between the WHT/YEL and the GRN/WHT[1] (or YEL/BLU) terminals: There should be continuity.	• Faulty headlight retractor motor • An open in the wire
	Turn the retractor knob clockwise until the headlights are fully raised.	Check for continuity between the WHT/YEL and the GRN/WHT[1] (or YEL/BLU) terminals: There should be continuity.	• Faulty headlight retractor motor • An open in the wire
YEL/WHT • GRN/WHT[1] (YEL/BLU)	Headlight retractor switch OFF (retractable headlight closed) Connect an ohmmeter negative lead to the YEL/WHT terminal, and the positive lead to the GRN/WHT' (or YEL/BLU) terminal.	Check for continuity between the YEL/WHT and the GRN/WHT[1] (or YEL/BLU) terminals: There should be continuity.	• Faulty headlight retractor motor • An open in the wire
	Raise the headlights halfway by turning the retractor knob clockwise.	Check for continuity between the YEL/WHT and the GRN/WHT[1] (or YEL/BLU) terminals: There should be continuity.	• Faulty headlight retractor motor • An open in the wire
	Turn the retractor knob clockwise until the headlights are fully raised.	Check that there is no continuity between the YEL/WHT and the GRN/WHT[1] (or YEL/BLU) terminals.	• Faulty headlight retractor motor

Daytime Running Lights Control Unit Input Test (Canada)

Remove the glove box lower panel and glove box. Disconnect the 4P and 8P connectors from the daytime running lights control unit.
Inspect the connector and socket terminals to be sure they are all making good contact.

- If the terminals are bent, loose, or corroded, repair them as necessary, and recheck the system.
- If the terminals look OK, make the following input tests at the connector.
  — If any test indicates a problem, find and correct the cause, then recheck the system.
  — If all the input tests prove OK, the control unit must be faulty; replace it.

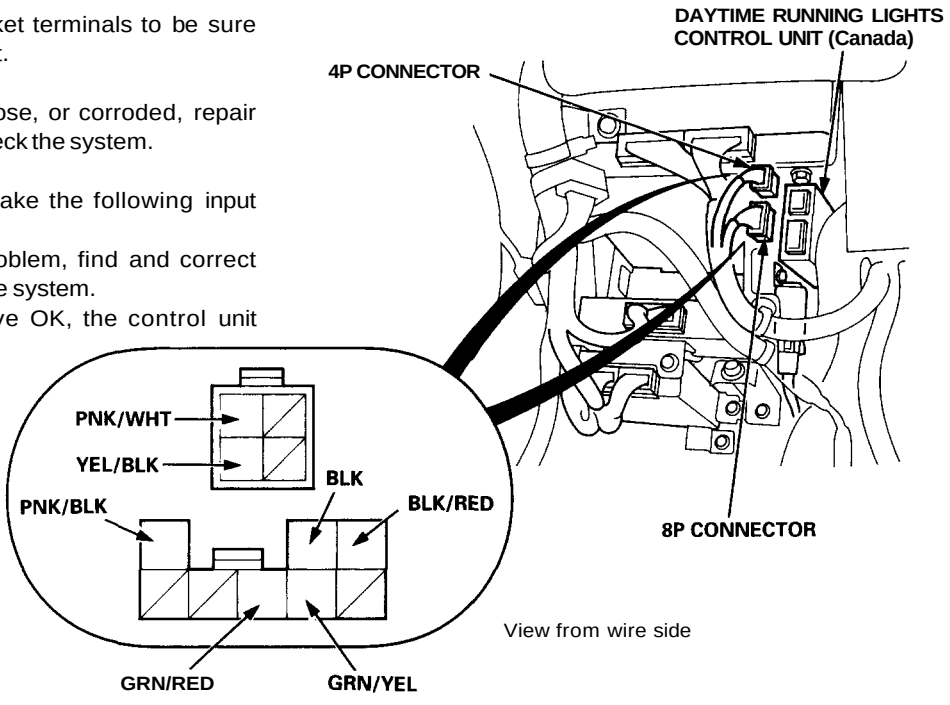

Wire	Test condition	Test: Desired result	Possible cause if result is not obtained
BLK	Under all conditions	Check for continuity to ground: There should be continuity.	• Poor ground (G401, G402, G403) • An open in the wire
PNK/WHT	Under all conditions	Check for voltage to ground: There should be battery voltage.	• Blown No. 44 (10 A) fuse • An open in the wire
BLK/RED	Ignition switch ON (II)	Check for voltage to ground: There should be battery voltage.	• Blown No. 3 (7.5 A) fuse • An open in the wire
PNK/BLK	Headlight switch "●" (headlights on)	Check for voltage to ground: There should be battery voltage.	• Blown No. 43 (15 A) fuse • Faulty headlight switch • An open in the wire
YEL/BLK	Under all conditions	Check for continuity to ground: There should be continuity.	• Blown daytime running light bulbs • Poor ground (G301) • An open in the wire
GRN/RED	Ignition switch ON (II)	Connect to ground: The brake system light should come on.	• Blown No. 5 (15 A) fuse • Blown bulb • An open in the wire
GRN/YEL	Parking brake switch ON (parking brake lever up)	Check for continuity to ground: There should be continuity.	• Faulty parking brake switch • An open in the wire

Combination Light/Turn Signal Switch Test

1. Remove the dashboard lower cover (see page 23-184).
2. Disconnect the 18P connector from the floor wire harness.
3. Check for continuity between the terminals, in each switch position, according to the table.

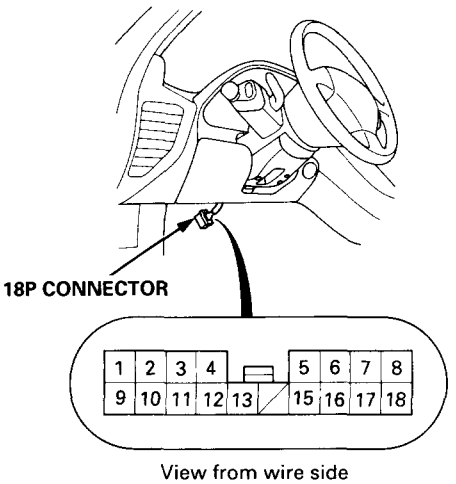

Headlight/Dimmer/Passing Switch

Position \ Terminal	2		3	4	5	7	8		12	13		15	16	18
All positions						○	○	⊖				○		○
Headlight witch: OFF				○						○				
Headlight witch: •	○	◀			○									
Headlight witch: ●	○	◀	○						○				○	
	○	◀			○									
Dimmer switch (Headlight switch "●"): LOW	○	◀	○						○				○	
	○	◀			○									
Dimmer switch (Headlight switch "●"): HIGH	○	◀	○						○				○	
	○	◀			○									
	○	◀										○		
Passing switch: ON	○	◀							○		◀	○		
						○			○					
	○	◀						◀				○		

Turn Signal Switch

Position \ Terminal	6		10	11
RIGHT	○	◀	○	
NEUTRAL				
LEFT	○	◀		○

Headlight/Turn Signal Switch Replacement

SRS components are located in this area. Review the SRS component locations, precautions, and procedures in the SRS section 24 before performing repairs or service.

1. Remove the dashboard lower cover, and disconnect the connectors.
2. Remove the dashboard lower pad.

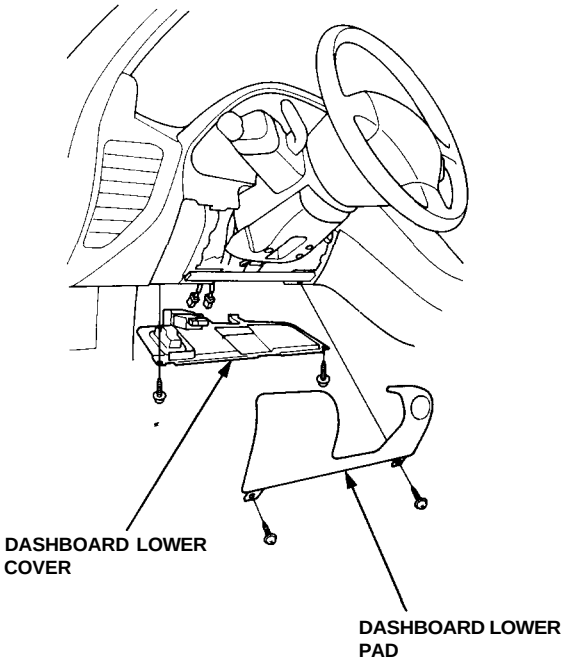

3. Remove the tilt cover.

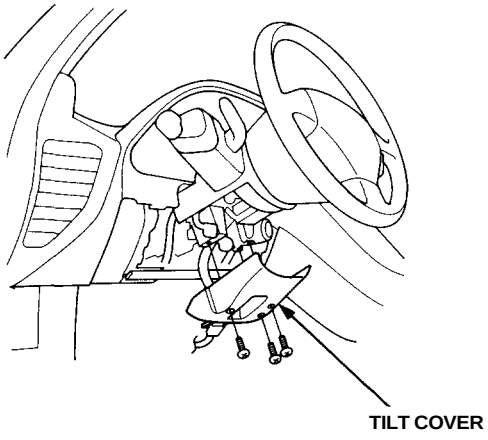

4. Remove the steering column covers.

   NOTE: Be careful not to damage the steering column covers.

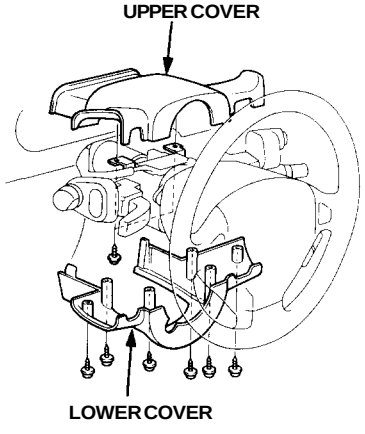

5. Disconnect the 18P and 10P connectors.

CAUTION: Be careful not to damage the SRS wire harness.

6. Remove the six screws, then remove the headlight-turn signal switch assembly.

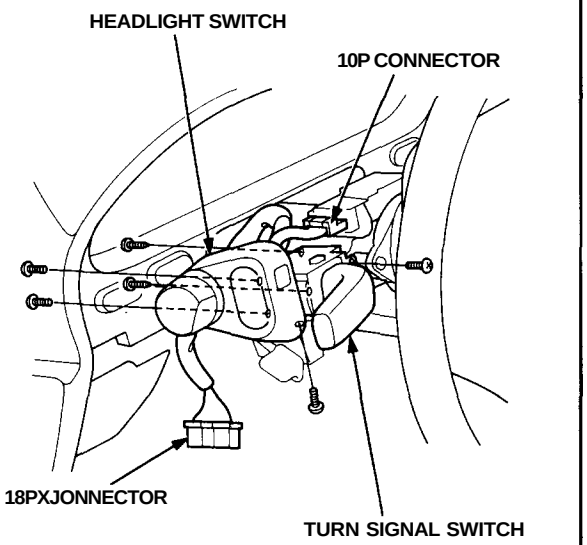

7. If necessary, remove the turn signal cancel unit and cancel switch.

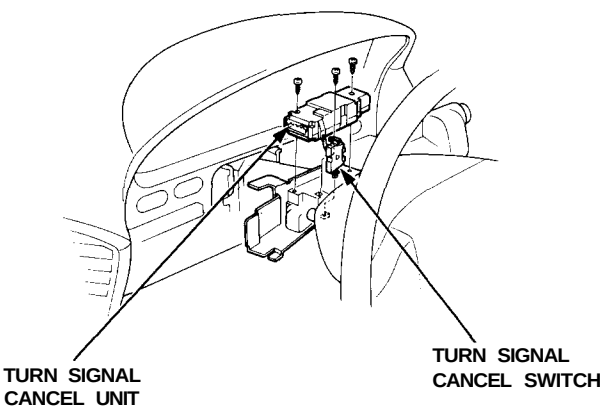

8. If necessary, remove the headlight switch bulb.

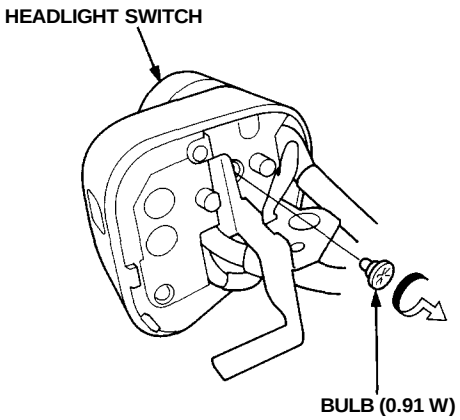

Retractor Switch Removal

SRS components are located in this area. Review the SRS component locations, precautions, and procedures in the SRS section 24 before performing repairs or service.

1. Remove the dashboard lower cover, and disconnect the connectors.

2. Remove the dashboard lower pad.

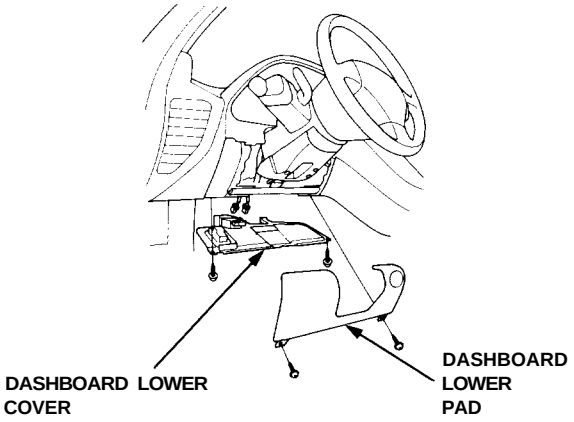

3. Remove the tilt cover.

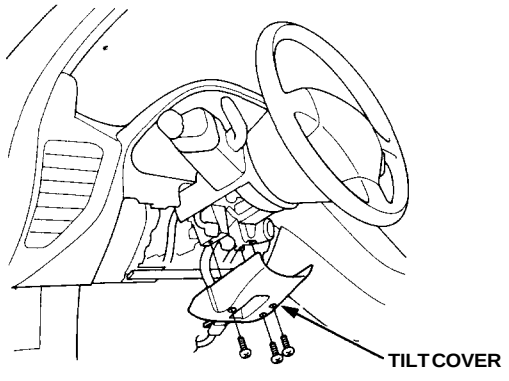

4. Remove the steering column covers.

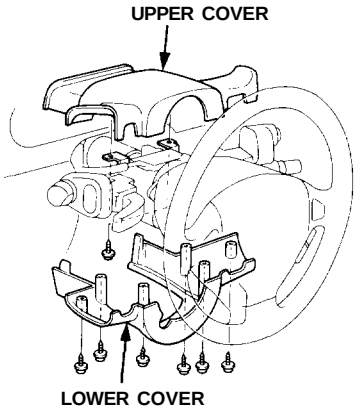

5. Disconnect the 5P and 10P connectors from each switch.

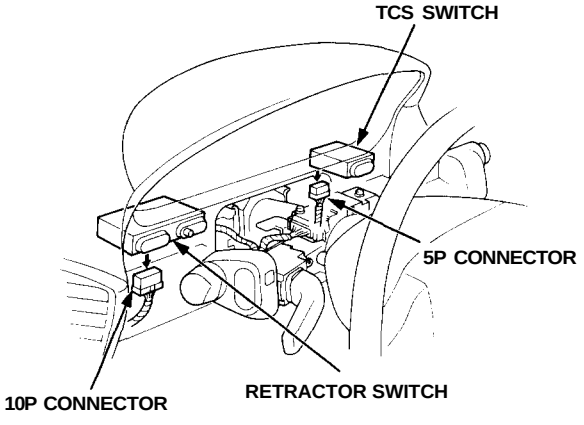

6. Remove the six screws, then remove the instrument panel trim from the dashboard.

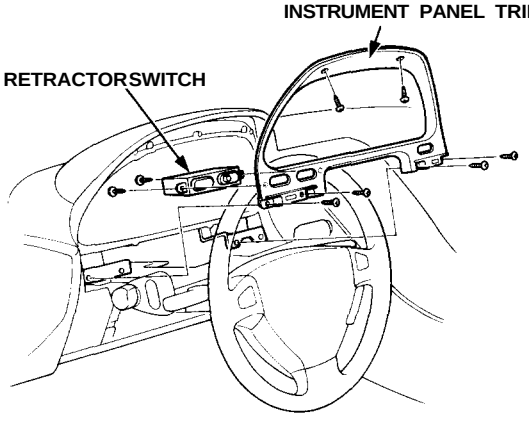

7. Remove the two screws, then remove the retractor switch from the instrument panel trim.

Retractor Switch Test

1. Remove the retractor switch (see page 23-186).
2. Check for continuity between the terminals in each switch position according to the table.

Retractor Switch

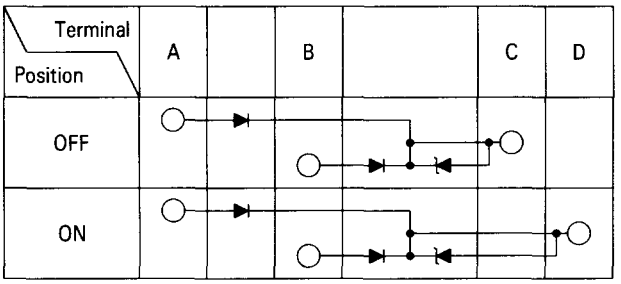

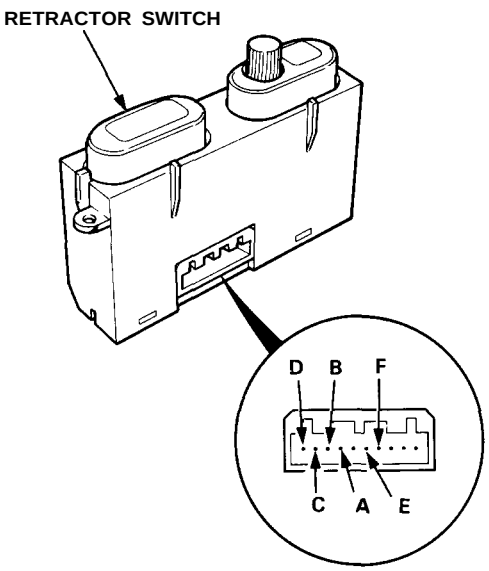

Retractor Switch

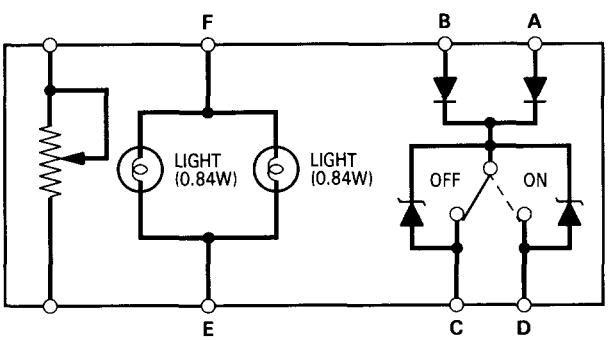

Retractor Switch Light Bulb Replacement

1. Remove the retractor switch (see page 23-186).
2. Turn the bulb 45° counterclockwise to remove it.

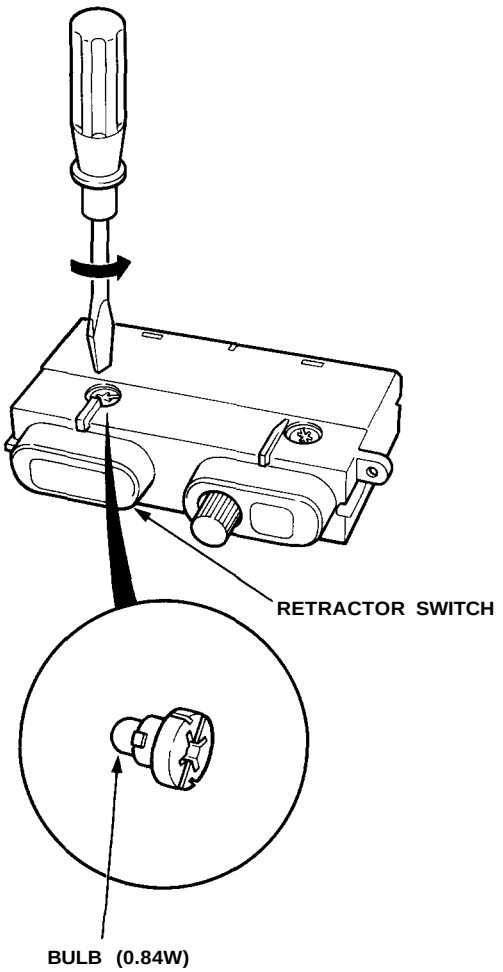

Retractor Motor Replacement

CAUTION:
- **Halogen headlights can become very hot in use; do not touch them or the attaching hardware immediately after they have been turned off.**
- **Do not try to replace or clean headlights with the lights on.**

1. Remove the No. 42 (15 A) and No. 43 (15 A) fuses from the under-hood fuse/relay box.

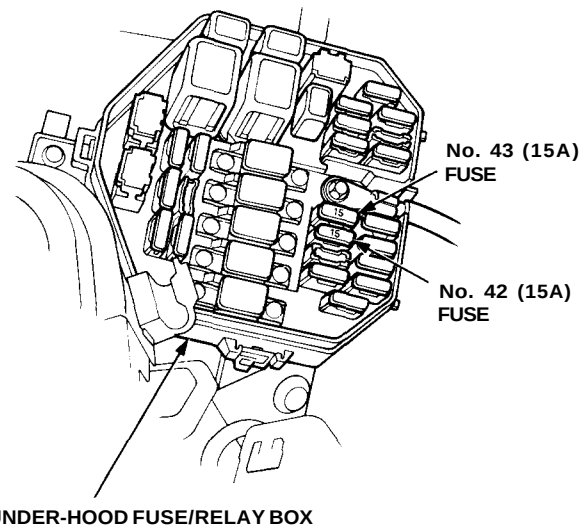

2. Turn the knob clockwise to raise the headlight.

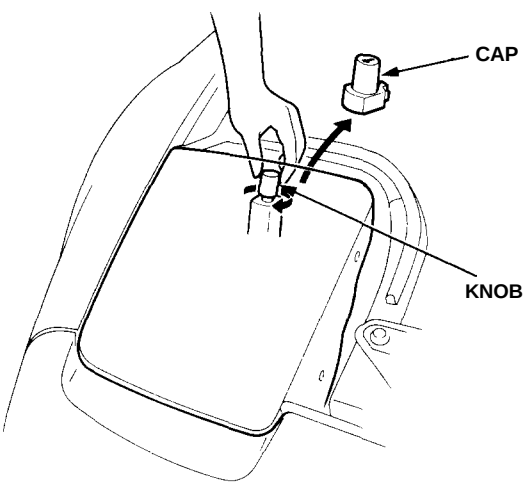

3. Remove the two caps, four screws, and cowl clips.

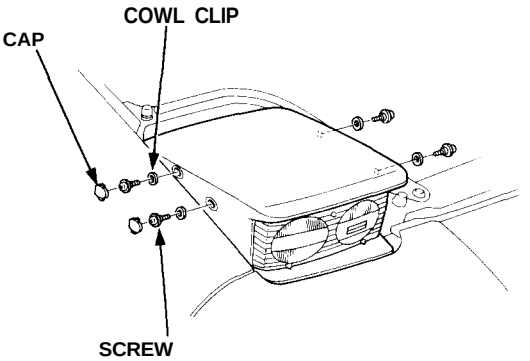

4. Slide the headlight housing forward and up.

   NOTE: Be careful not to damage the front bumper or the headlight housing.

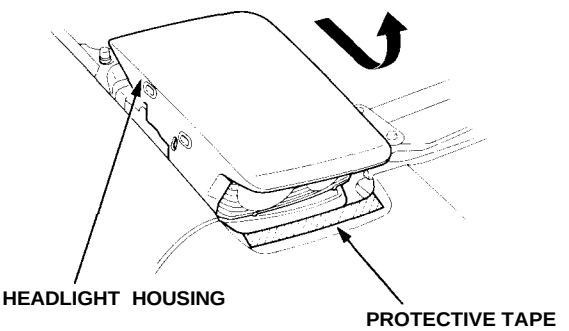

5. Disconnect the 6P connector from the headlight unit.

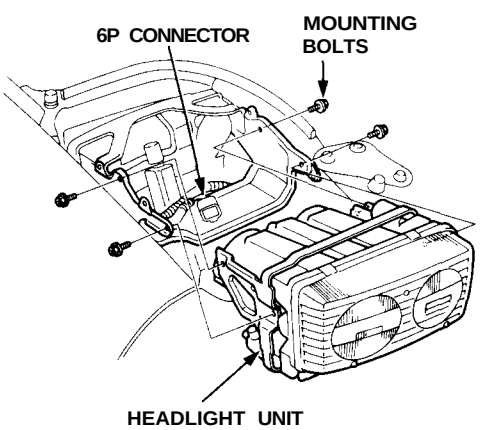

6. Remove the four mounting bolts, then remove the unit.

7. Disconnect the 6P connector.

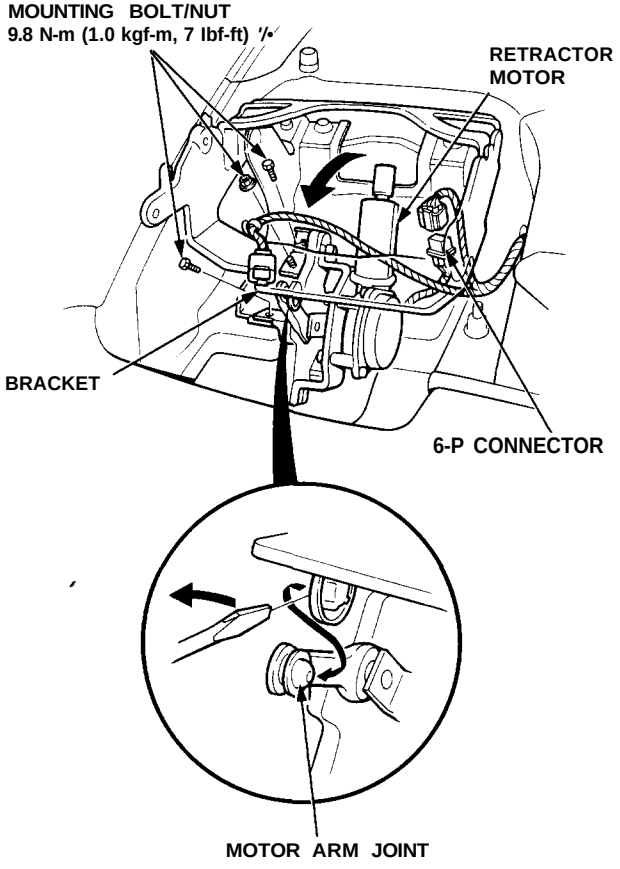

8. Remove the two mounting bolts and the mounting nut.

9. Pry the retractor linkage off the motor arm.

10. Pull out the retractor motor.

11. Install in the reverse order of removal, and:

- Make sure there is no interference between the wire harness and linkage.
- Coat the joint with grease, and make sure the linkage moves smoothly.

Headlight Housing Adjustment

1. Remove the stop bolt caps.
2. Adjust stop bolts A and B.

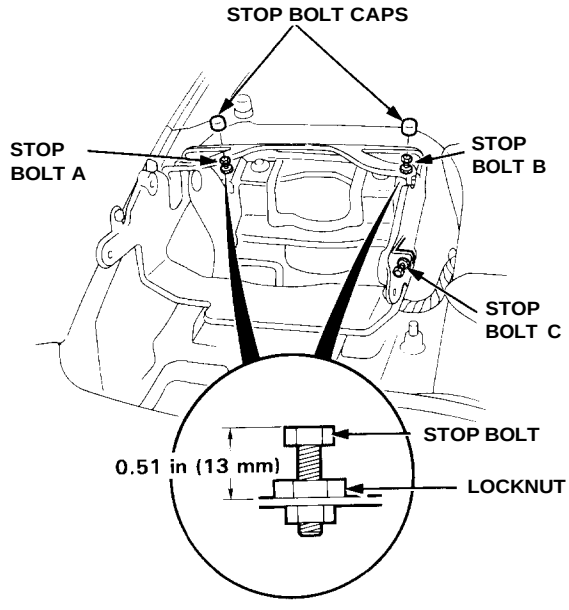

3. Adjust stop bolt C in or out until the headlight housing fits flush with the front fender when the headlight is down.

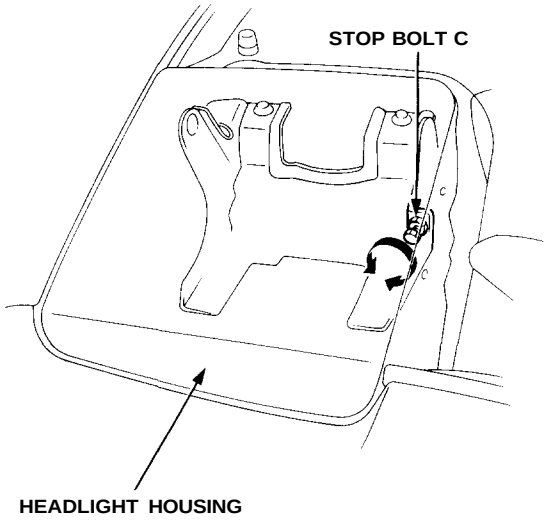

(cont'd)

Headlight Housing Adjustment (cont'd)

4. Adjust the retractor motor toward front or rear until the headlight housing fits flush with the front fender when the headlight is down.

   NOTE: Be careful not to damage the headlight housing.

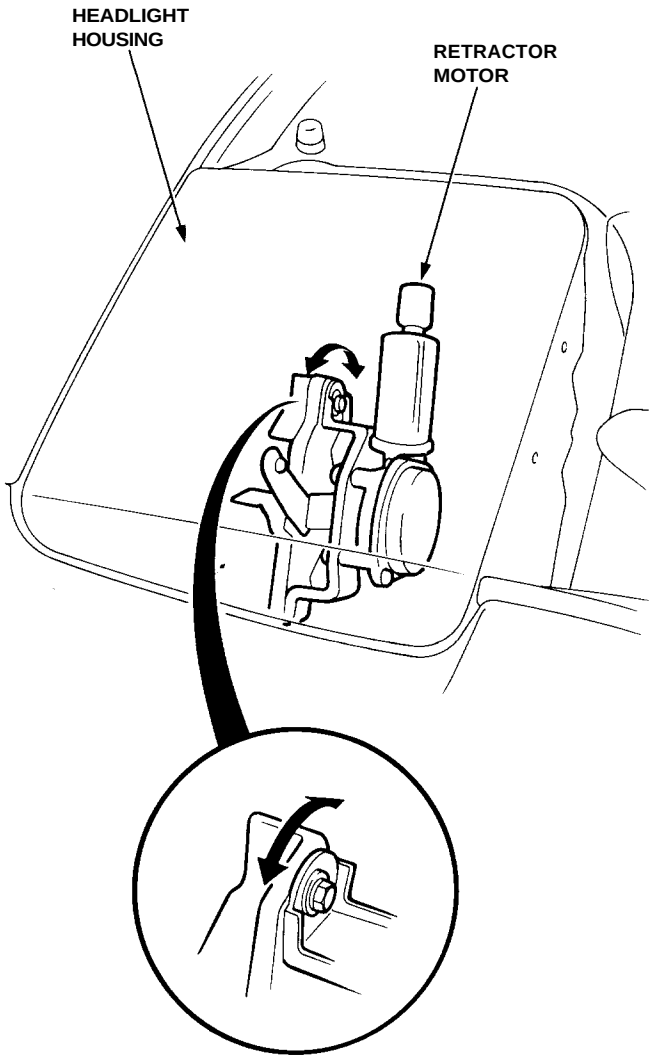

Retractor Motor Test

1. Remove the retractor motor.
2. Test the motor by connecting battery power to the A terminal and ground to the D terminal. The motor should run continuously.
3. If the motor does not run or fails to run smoothly, replace it.

   NOTE: The illustration shows the motor in the condition when the headlight is fully raised.

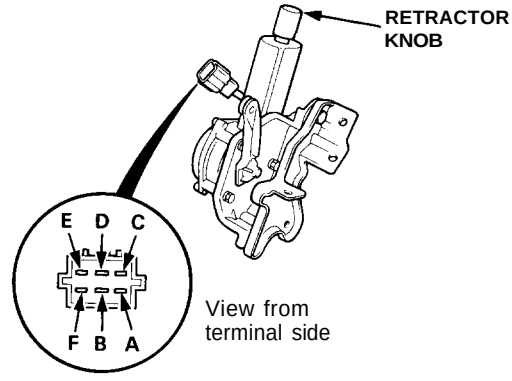

4. Disconnect the power supply, and check for continuity between the terminals according to the table while turning the retractor knob clockwise.

Terminal / Position	B	C			E	F
At closed position	○		○			○
At open position	○		○		○	

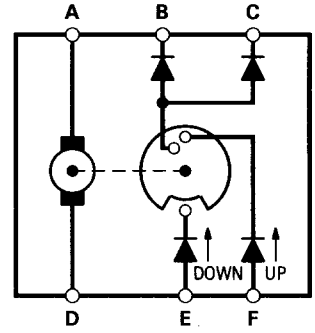

Headlight Relay Test

1. Remove the headlight relay from the under-hood fuse/relay box.

2. Check continuity at the relay terminals.

   - There should be continuity between the C and D terminals.
   - There should be continuity between the A and B terminals when power and ground are connected to the C and D terminals.
   - There should be no continuity between the A and B terminals when power is disconnected.

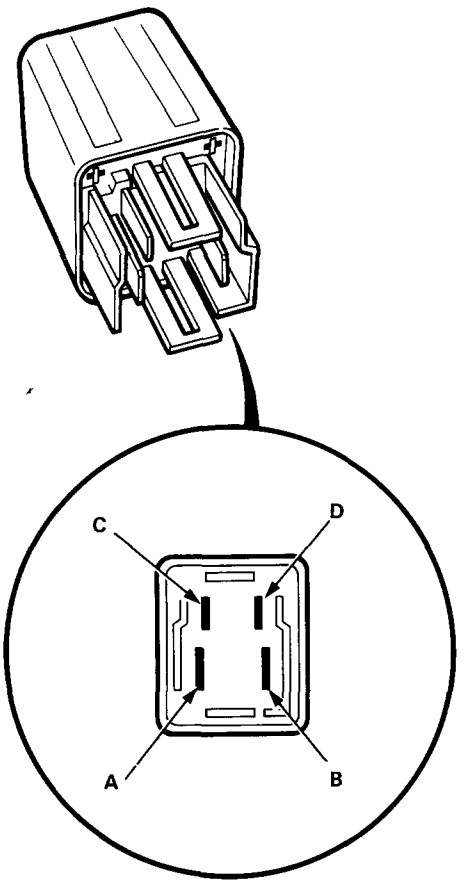

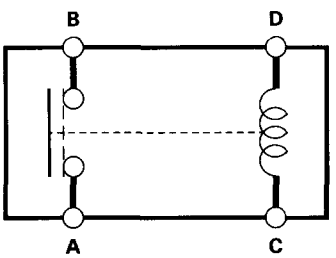

Dimmer Relay Test

1. Remove the dimmer relay from the under-hood fuse/relay box.

2. Check continuity at the relay terminals.

   - There should be continuity between the F and E terminals and between the B and C terminals.
   - There should be continuity between the A and C terminals when power and ground are connected to the E and F terminals.
   - There should be no continuity between the A and C terminals when power is disconnected.

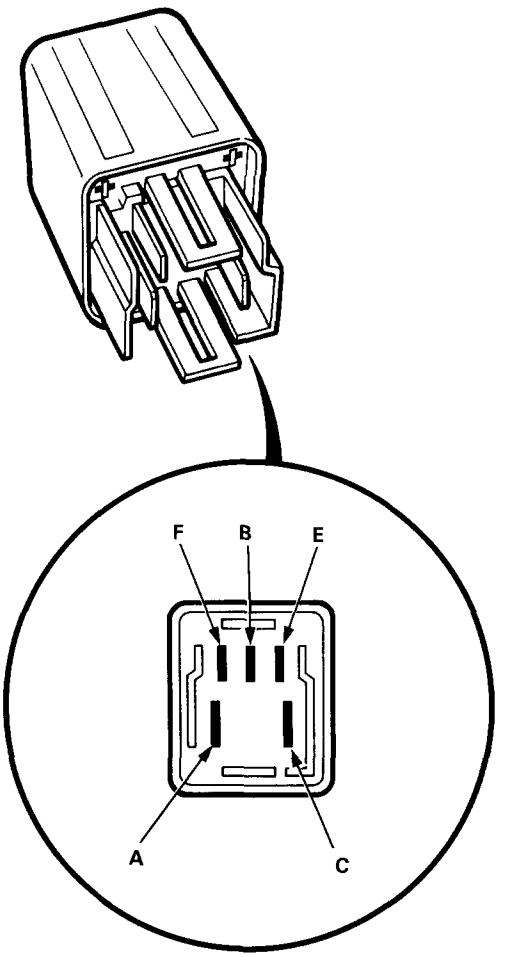

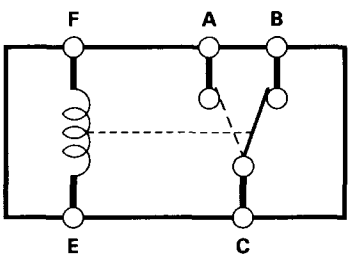

Retractor Relay Test

1. Remove the retractor relay (located at the right side of the front compartment).
2. Check continuity at the relay terminals.
   - There should be continuity between the E and F terminals and between the B and C terminals.
   - There should be continuity between the A and C terminals when power and ground are connected to the E and F terminals.
   - There should be no continuity between the A and C terminals when power is disconnected.

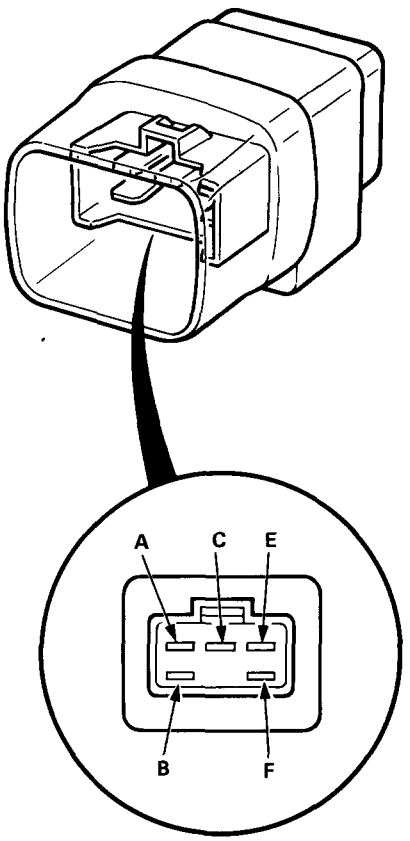

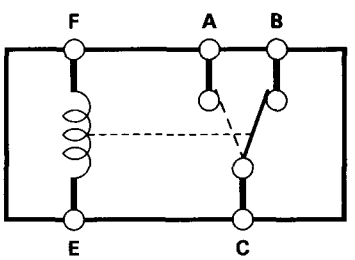

Retractor Cut/Taillight Relay Test

1. Remove the retractor cut relay and taillight relay.
2. Check continuity at the relay terminals.
   - There should be continuity between the C and D terminals.
   - There should be continuity between the A and B terminals when power and ground are connected to the C and D terminals.
   - There should be no continuity between the A and B terminals when power is disconnected.

- **Taillight relay**

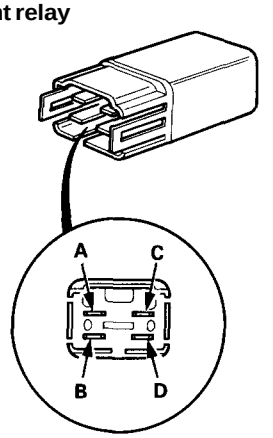

- **Retractor cut relay**

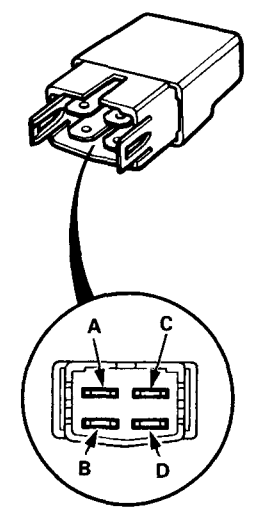

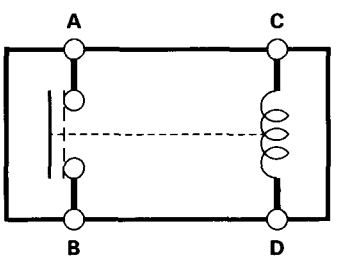

Headlights

Description

The light first forms basic pattern A after being interrupted by the interrupter plate and passing through the convex lens. The interrupter plate determines the form. The outer lens distributes the light into pattern B.

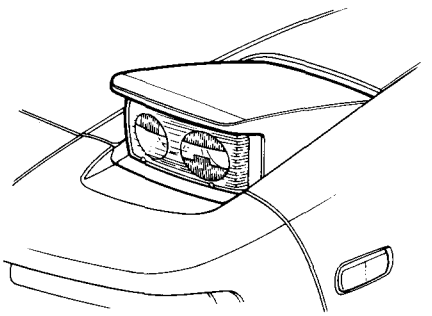

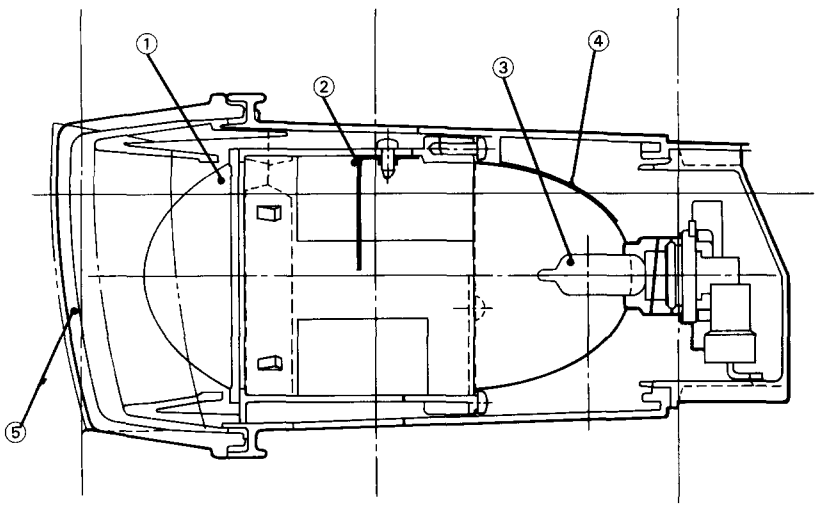

① CONVEX LENS
② INTERRUPTER PLATE
③ BULB
④ REFLECTOR
⑤ OUTER LENS

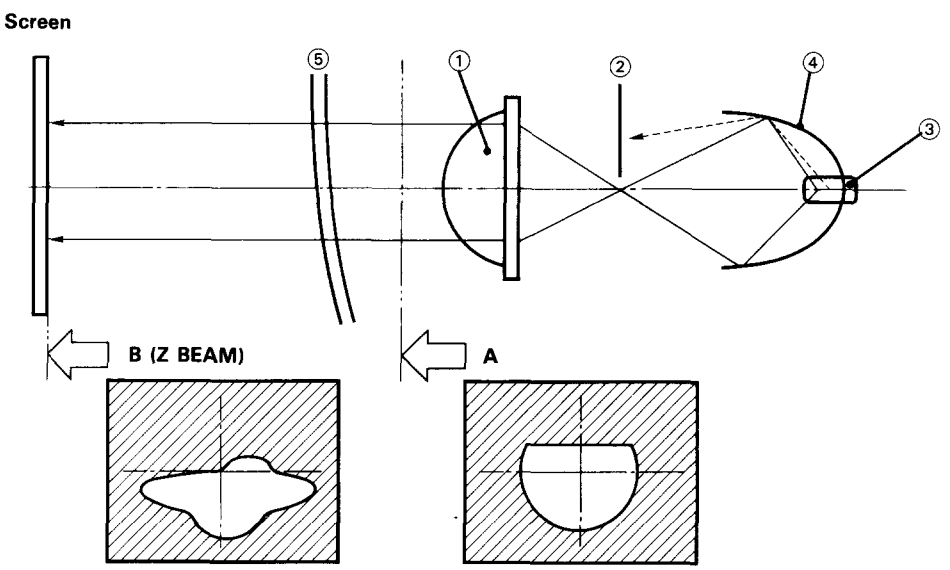

Headlights

Adjustment

Adjust the headlights to local requirements by turning the adjusters as shown.

NOTE: Be careful not to damage the front fender or the headlight housing when adjusting.

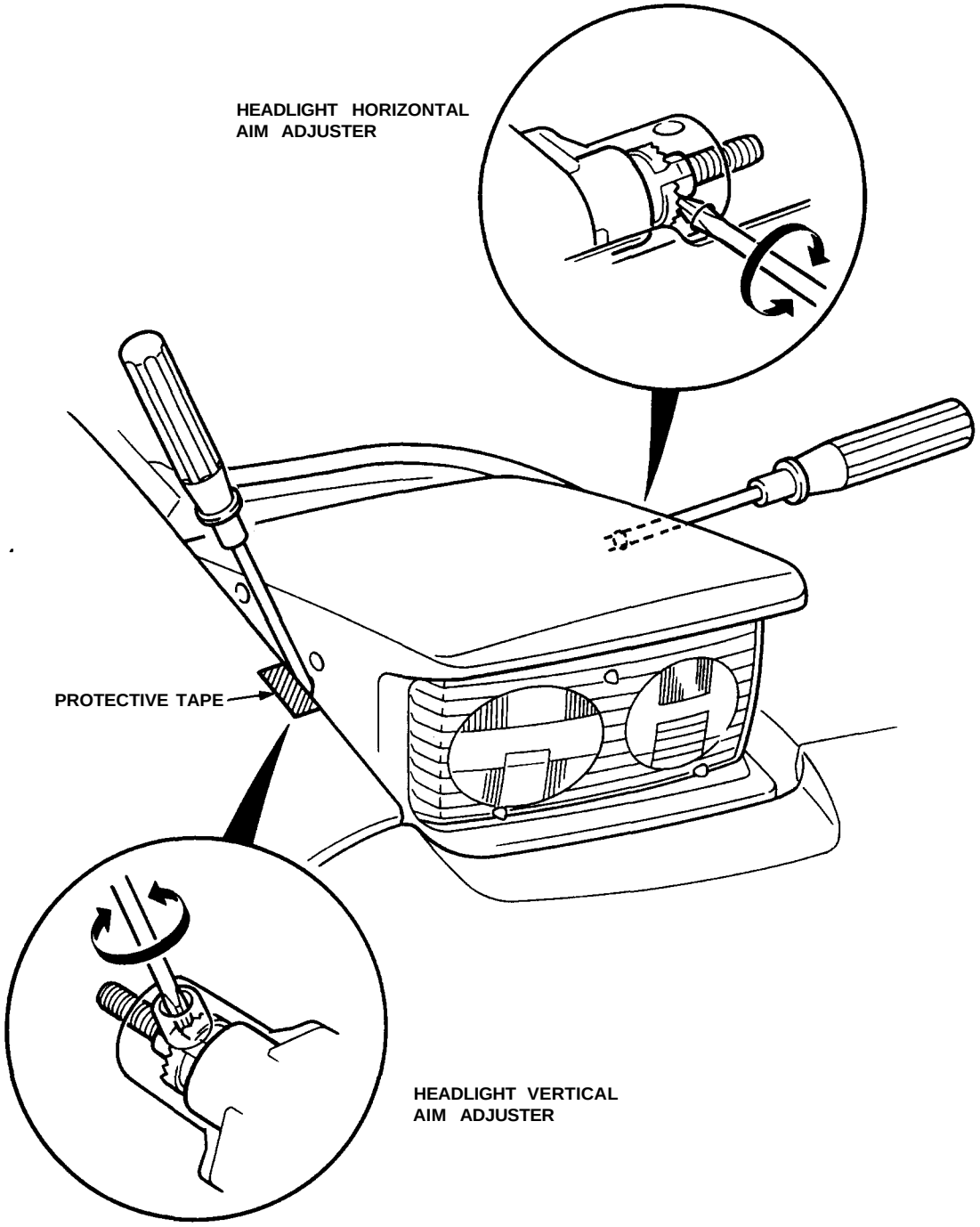

Headlight Replacement

CAUTION:
- **Halogen headlights can become very hot in use; do not touch them or the attaching hardware immediately after they have been turned off.**
- **Do not try to replace or clean the headlights with the lights on.**

1. Remove the No. 42 (15 A) and No. 43 (15 A) fuses from the under-hood fuse/relay box.

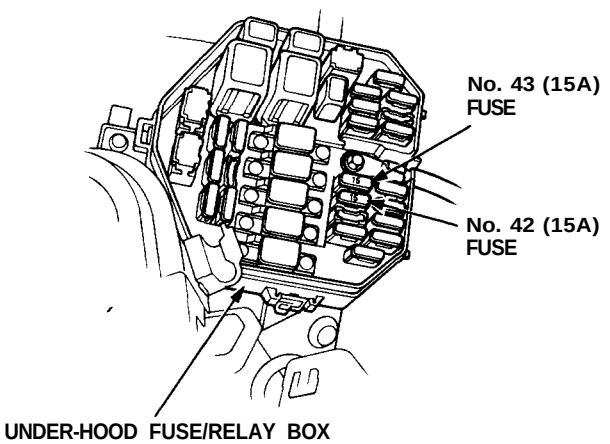

2. Remove the cap, and turn the knob clockwise to raise the headlight.

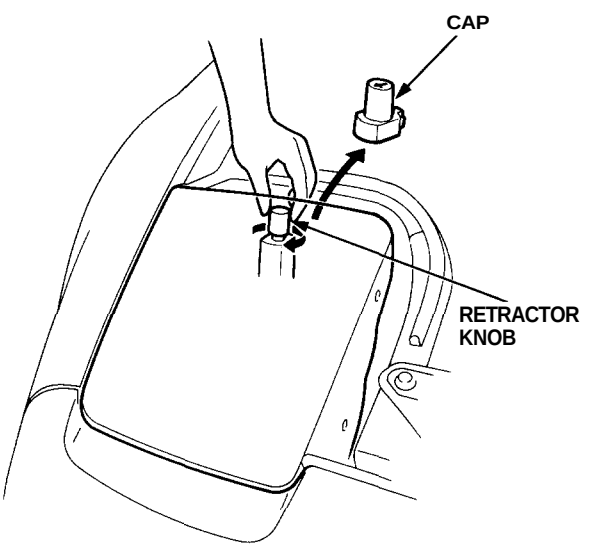

3. Remove the two caps, four screws, and cowl clips.

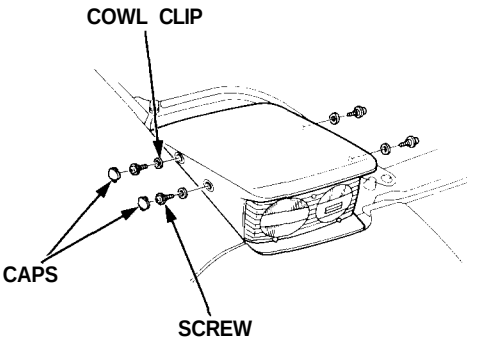

4. Slide the headlight housing forward and up to remove it. Be careful not to damage the bumper or the housing.

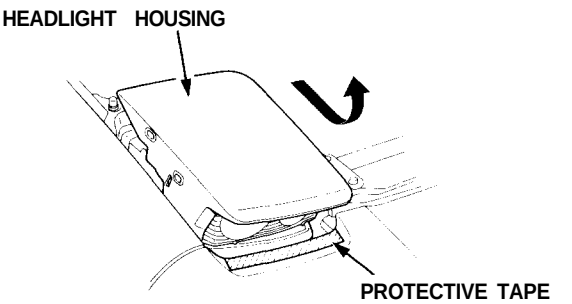

5. Disconnect the 6P connector from the headlight unit.

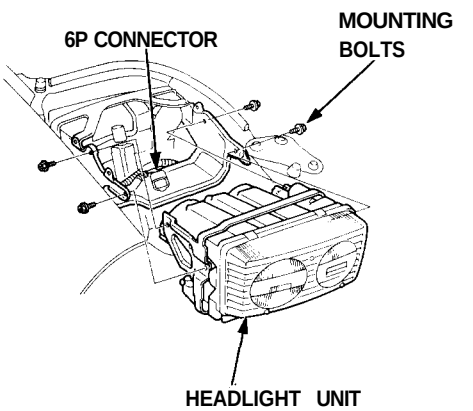

6. Remove the four mounting bolts, then remove the headlight unit.

7. After installing the new headlight, adjust both headlights to local requirements.

Headlights

Bulb Replacement

CAUTION:
- **Halogen headlights can become very hot in use; do not touch them or the attaching hardware immediately after they have been turned off.**
- **Do not try to replace or clean the headlights with the lights on.**

1. Remove the bulb cap.

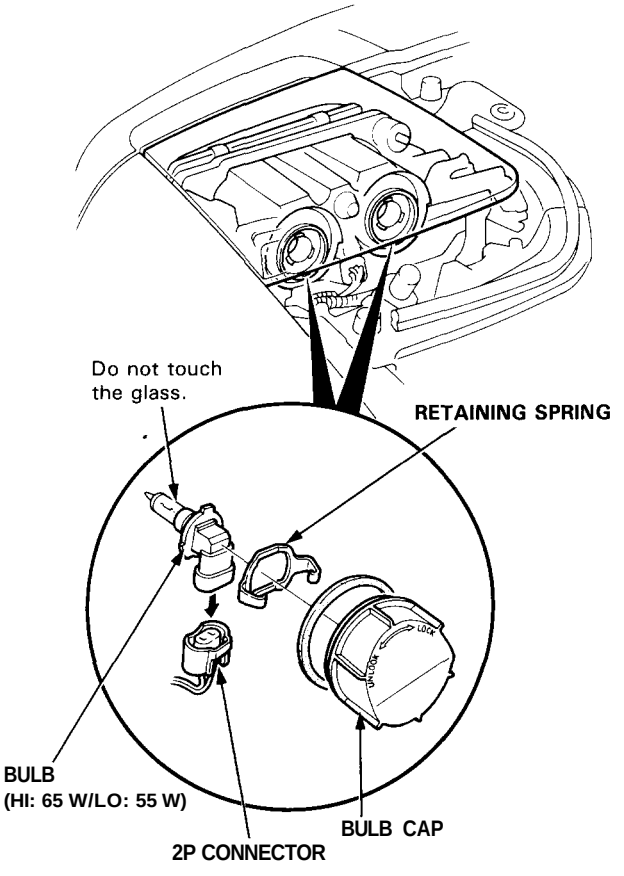

2. Disconnect the 2P connector, then remove the retaining spring and bulb.

Daytime Running Lights (Canada)

Replacement

1. Remove the bolt, and pull out the daytime running light, then disconnect the 2P connector.

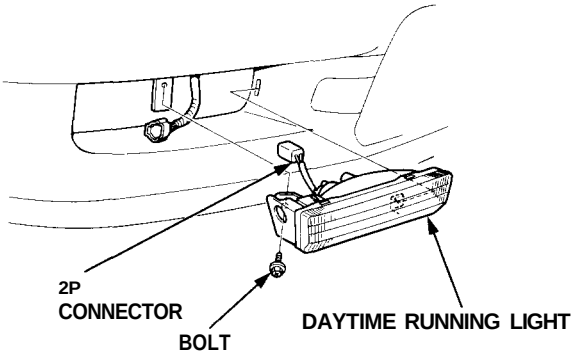

2. If necessary, replace the bulb.

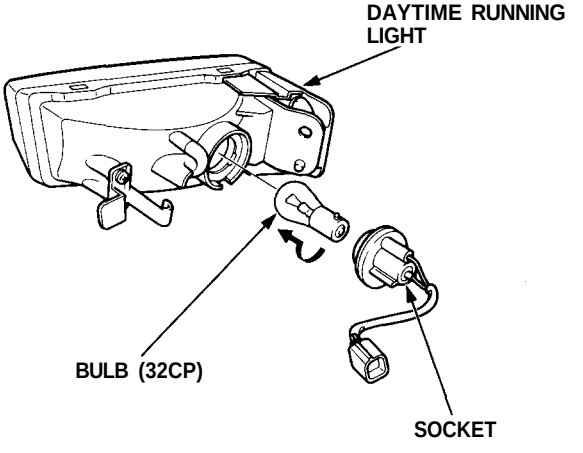

Front Turn Signal/Front Parking Lights

Replacement

1. Remove the screw, and pull the light assembly out of the front bumper.

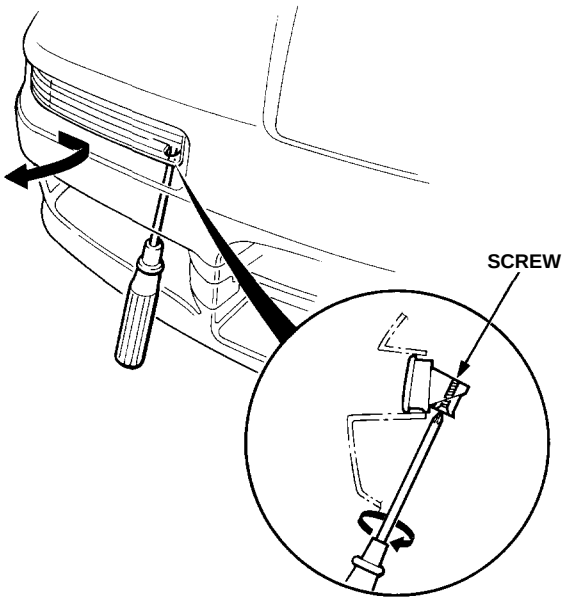

2. Disconnect the 2P connectors from the bulb sockets.

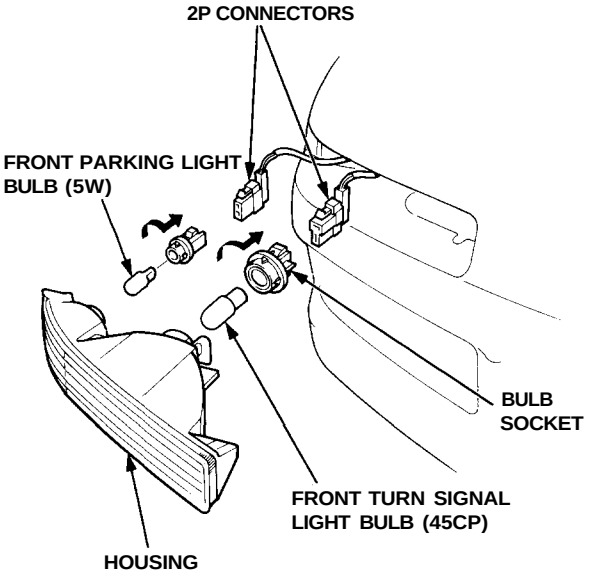

3. Turn the bulb sockets 45° counterclockwise to remove them from the housing.

Front Side Marker Lights

Replacement

1. Carefully pry the front side marker light out of the front fender. Be careful not to damage the front side marker light or the front fender.

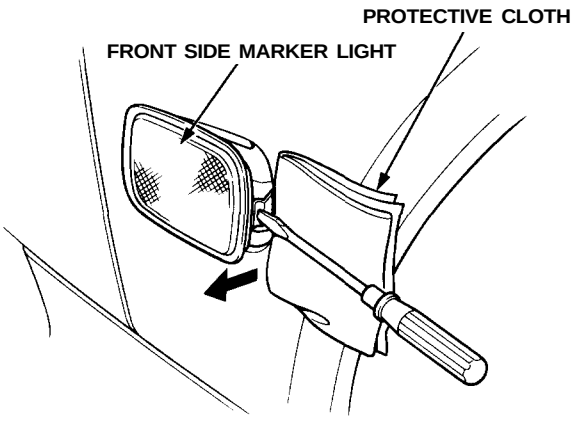

2. Disconnect the 2P connector from the front side marker light.

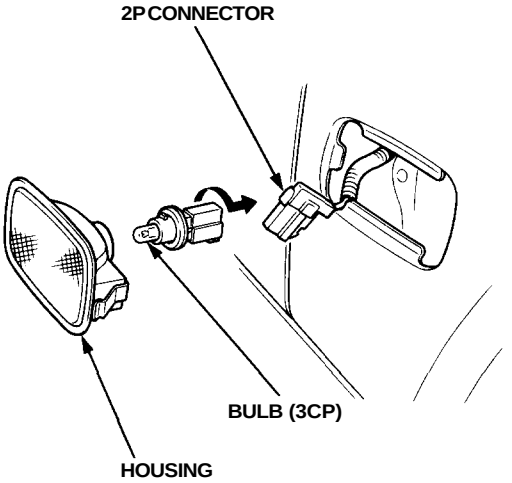

3. Turn the bulb socket 45° counterclockwise to remove it from the housing.

Taillights

Replacement

1. Open the trunk lid, and remove the rear trim panel.
2. Disconnect the 8P connector and 2P connector from the taillight assembly.
3. Disconnect the 2P connector from the trunk key cylinder switch.

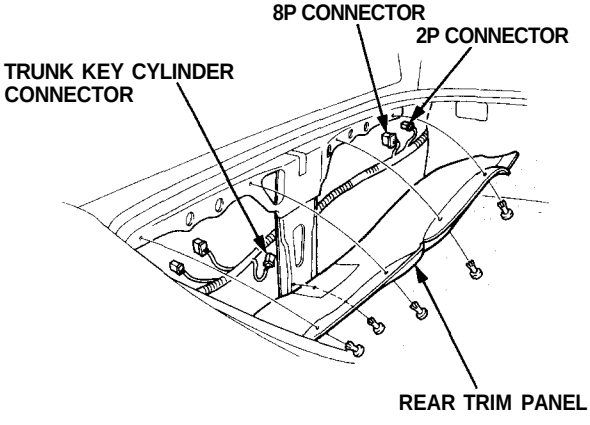

4. Remove the four mounting nuts and rear panel, then remove the ten mounting nuts and the taillight assembly.

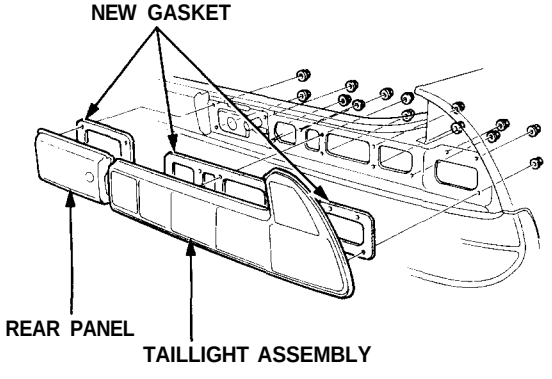

5. Inspect the gasket; if it is distorted or stays compressed, replace it.
6. After installing, run water over the lights to make sure they don't leak.

Bulb Replacement

1. Open the trunk lid, and remove the rear trim panel.
2. Turn each socket 45° counterclockwise to remove them from the taillight housing.

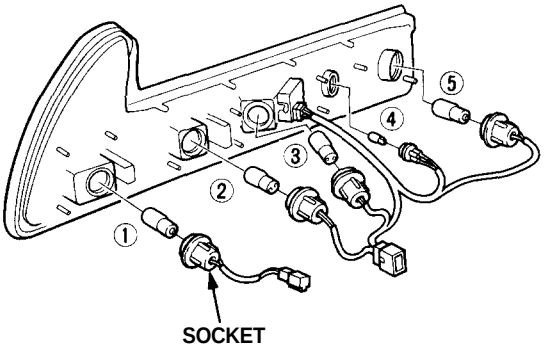

①: TURN SIGNAL LIGHT BULB (45CP)
② and ③: BRAKE LIGHT/TAILLIGHT BULBS (32CP/2CP)
④: TAILLIGHT BULB (2CP)
⑤: BACK-UP LIGHT BULB (32CP)

3. Remove the bulbs from the sockets.

Rear Side Marker Lights

Replacement

1. Carefully pry the rear side marker light out of the rear fender. Be careful not to damage the rear parking light or the rear fender.

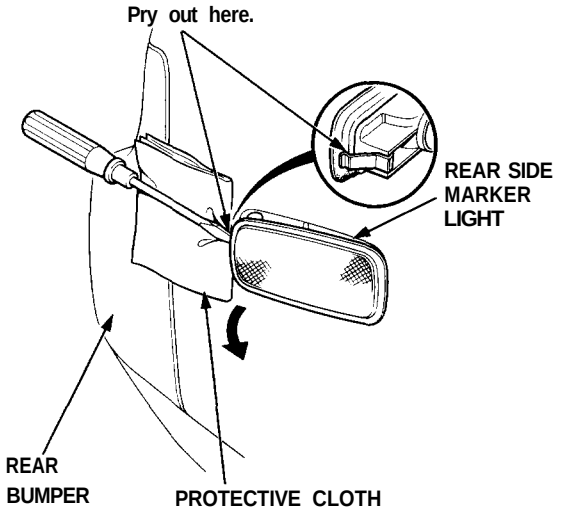

2. Disconnect the 2P connector from the rear side ma/ker light.

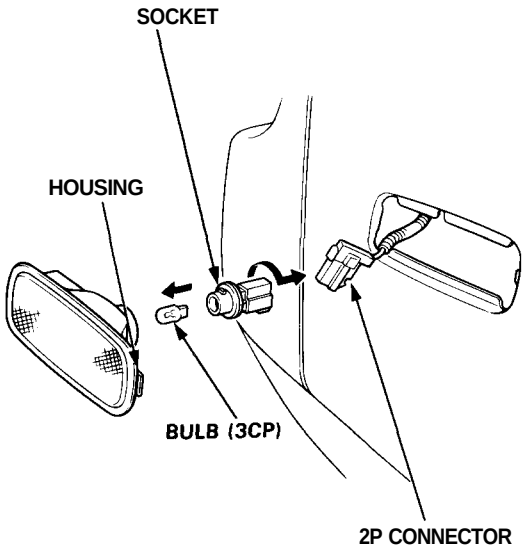

3. Turn the bulb socket 45° counterclockwise to remove it from the rear side marker light.

License Plate Lights

Replacement

1. Remove the eight screws, and disconnect the 4P connector.

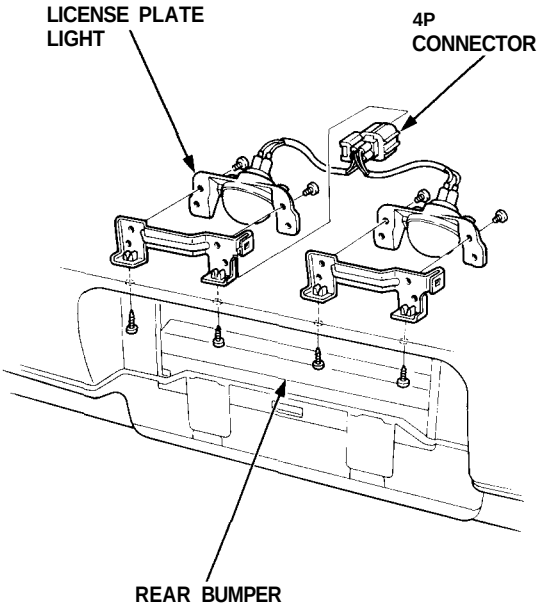

2. Turn the bulb socket 45° counterclockwise to remove it from the housing.

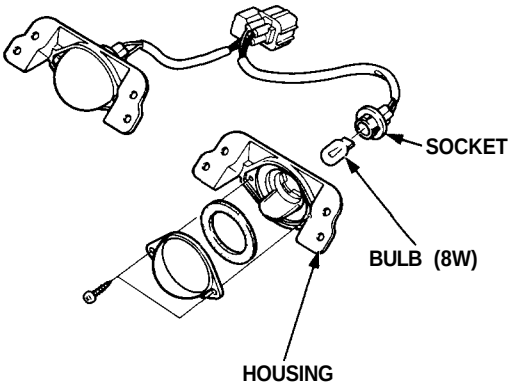

3. If necessary, separate the lens from the housing by removing the two screws.

Glove Box Light

Replacement/Test

1. Remove the glove box lower panel.

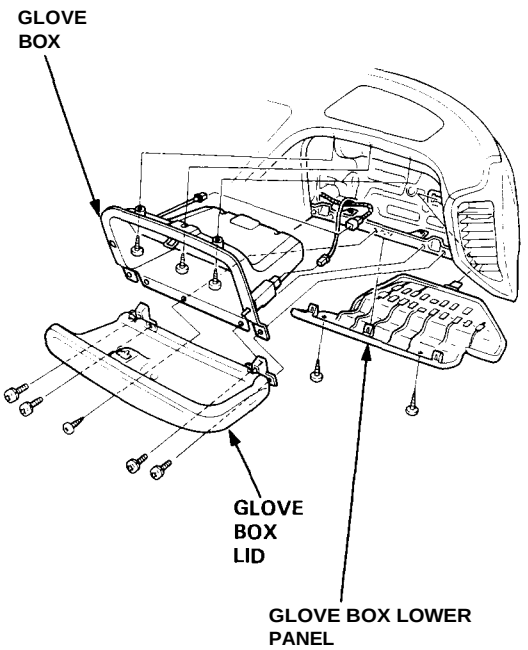

2. Remove the eight screws, then pull out the glove box.

3. Disconnect the 2P connectors, then remove the glove box.

4. Remove the two screws from the glove box light.

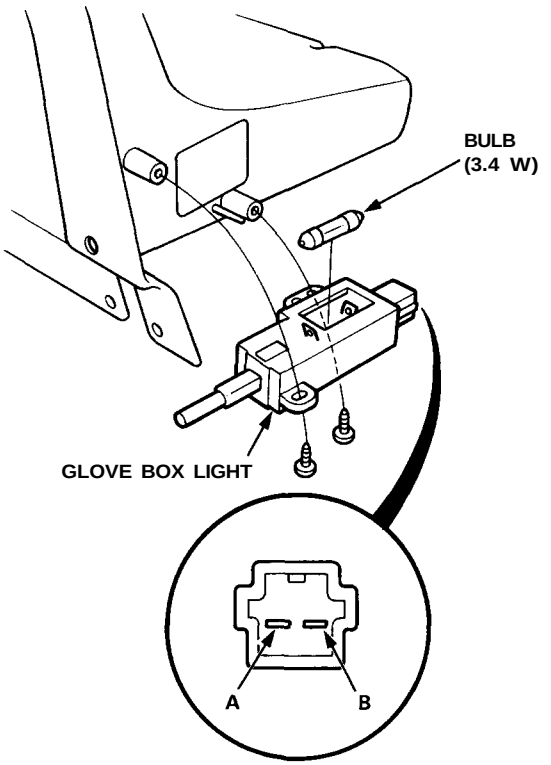

5. Check for continuity between the A terminal and B terminal with a bulb installed. There should be continuity. There should be no continuity when the switch plunger is pushed.

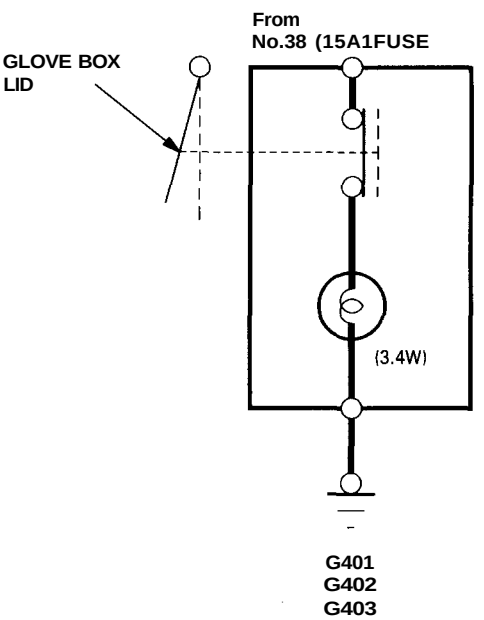

Ceiling/Courtesy/Trunk Lights

Component Location Index

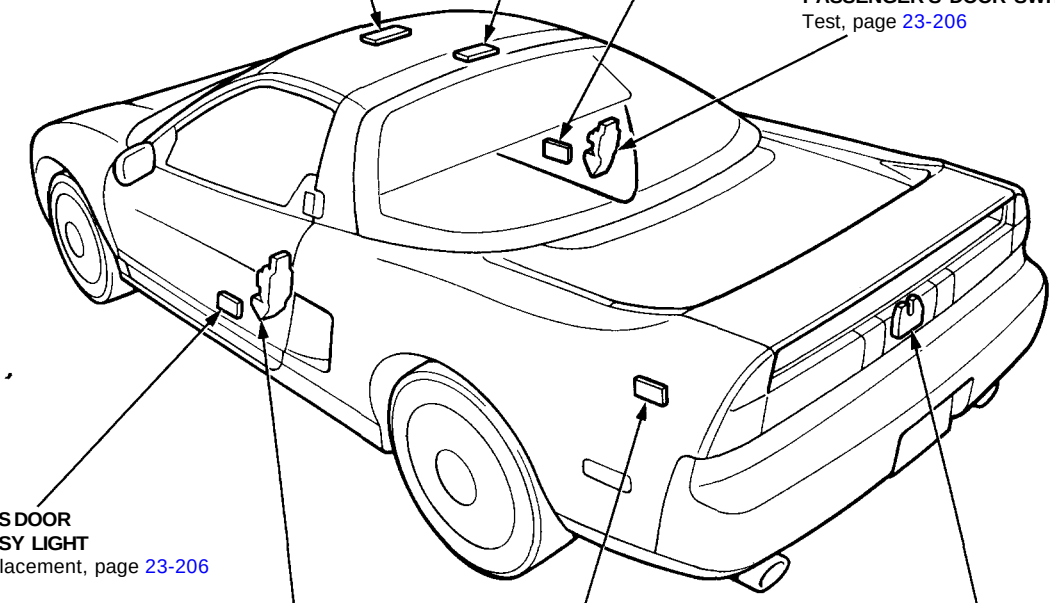

CEILING LIGHT (*1)
Test, page 23-204
Replacement, page 23-205

CEILING LIGHT (Coupe)
Test, page 23-203
Replacement, page 23-205

PASSENGER'S DOOR COURTESY LIGHT
Test/Replacement, page 23-206

PASSENGER'S DOOR SWITCH
Test, page 23-206

DRIVER'S DOOR COURTESY LIGHT
Test/Replacement, page 23-206

DRIVER'S DOOR SWITCH
Test, page 23-206

TRUNK LIGHT
Test/Replacement, page 23-207

TRUNK LATCH SWITCH
Test/Replacement, page 23-207

*1: NSX-T (open top) only

Ceiling Light Test

Coupe:

Check for continuity between the terminals in each switch position according to the table.

Position \ Terminal		D				A (A')	B (B')	C (C')	E	F	G
OFF		○	⊖	▶|	●	○					○
DOOR		○	⊖	▶|	●		○		○		○
ON		○	⊖	▶|	●			○			○
SW1	ON	○	⊖							○	
SW2	ON	○	⊖							○	

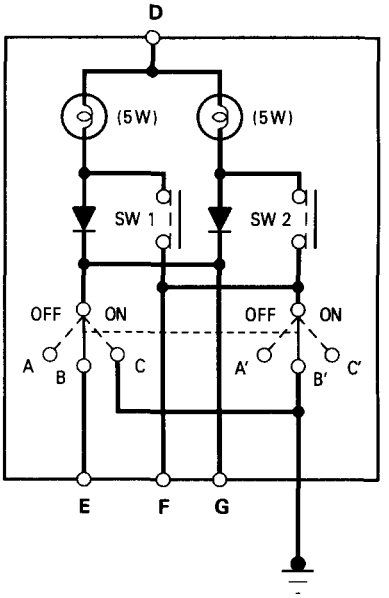

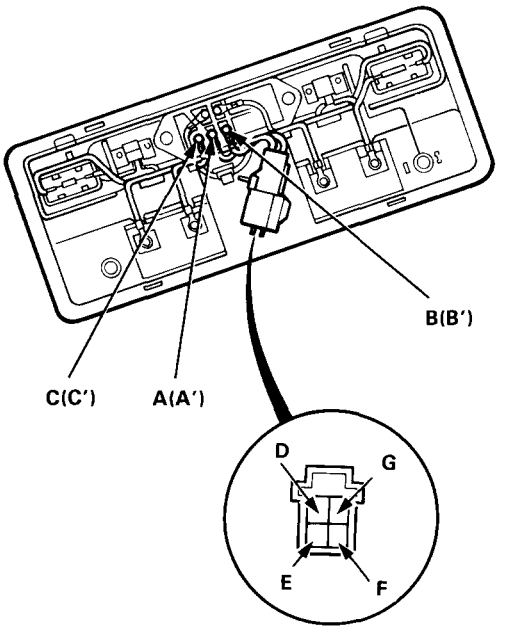

View from terminal side

(cont'd)

Ceiling Light Test (cont'd)

NSX-T (open top):

Check for continuity between the terminals in each switch position according to the table.

Position \ Terminal	A	B or E	C or H		D
OFF	○			⊙	○
DOOR		○		⊙	○
ON			○	⊙	○

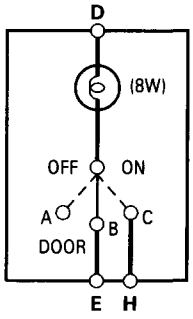

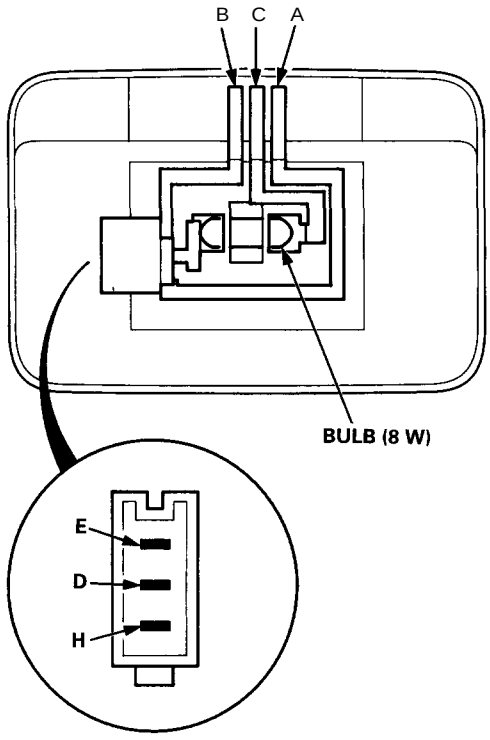

Ceiling Light Replacement

Coupe:

1. Turn the light switch OFF.
2. Pry off the lens.
3. Remove the two bolts and the housing.
4. Disconnect the 4P connector from the housing.

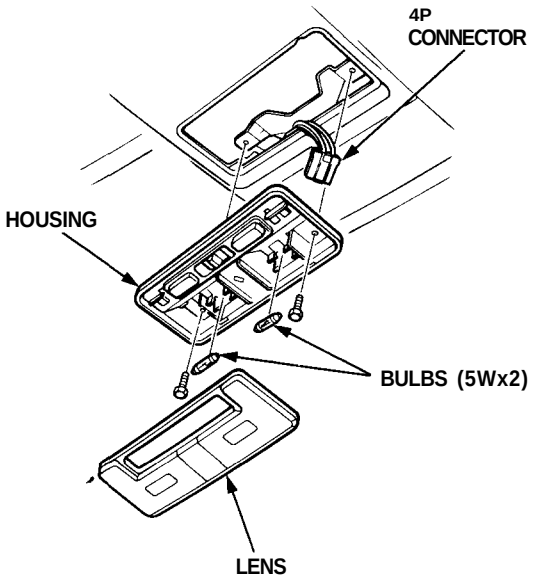

NSX-T (open top):

1. Turn the lights switch OFF.
2. Pry off the lens.
3. Remove the two screws and the housing.
4. Disconnect the 3P connector from the housing.

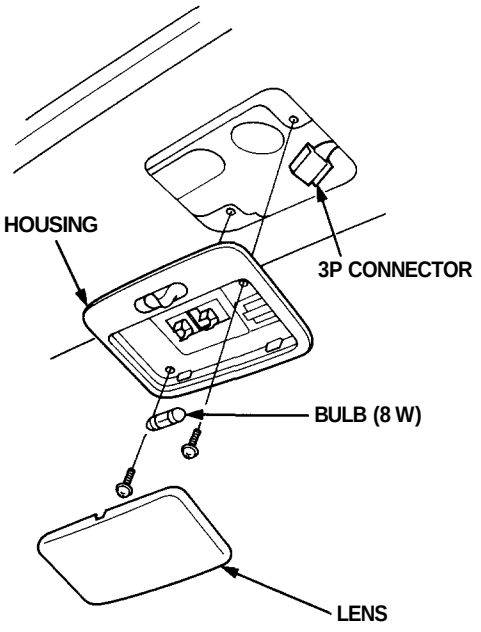

Ceiling/Courtesy/Trunk Lights

Courtesy Light Test/Replacement

NOTE: The bulb or lens alone can be replaced without having to remove the door panel.

1. Remove the door panel (see section 20).
2. Remove the two screws and the retainer plate, then remove the light from behind the door panel.
3. Make sure that the bulb is OK, then check for continuity between the A and B terminals. There should be continuity.

   NOTE: This light has a built-in diode. To get an accurate reading, either test it with a volt-ohmmeter that compensates for diodes, or make sure you connect your test leads to match the polarity shown.

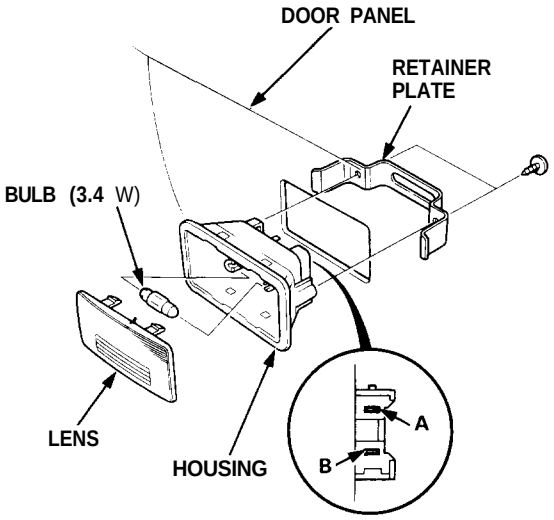

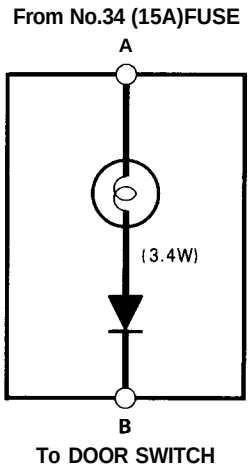

Door Switch Test

1. Remove the door panel (see section 20).
2. Disconnect the 2P connector from the door switch.

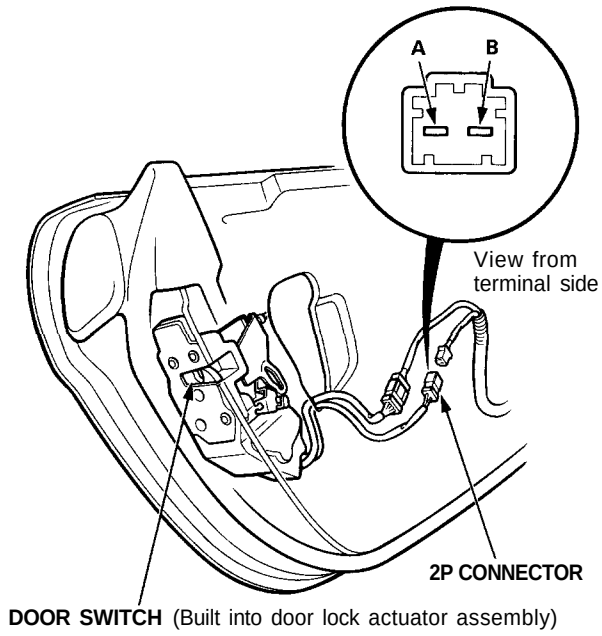

3. Check for continuity at the connector terminals.
   - There should be continuity with the switch released (door open).
   - There should be no continuity with the switch pushed (door closed).

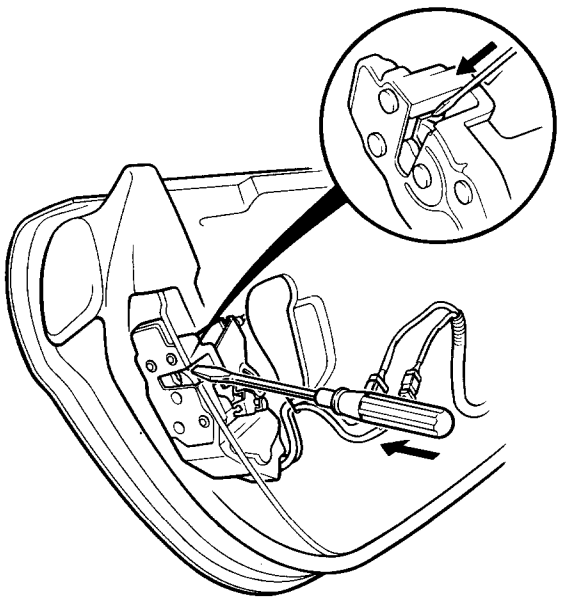

Trunk Light Test/Replacement

NOTE: The bulb or lens alone can be replaced without having to remove the trunk side panel.

1. Remove the trunk side panel.
2. Disconnect the 3P connector from the light housing.
3. Remove the two screws and the retainer plate, then remove the light from the trunk side panel.

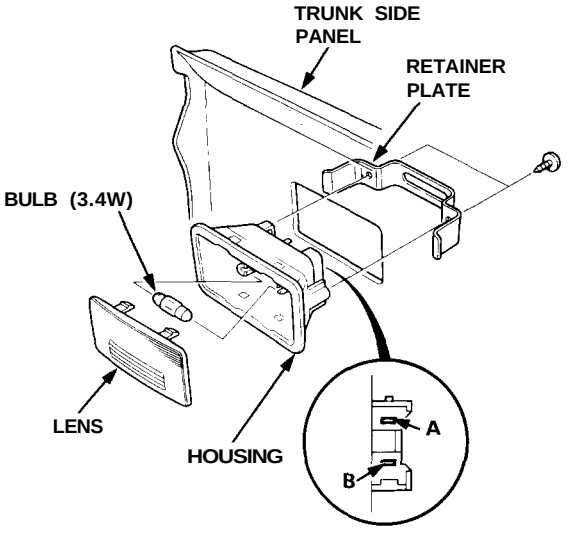

4. Make sure that the bulb is OK, then check for continuity between the A and B terminals. There should be continuity.

   NOTE: This light has a built-in diode. To get an accurate reading, either test it with a volt-ohmmeter that compensates for diodes, or make sure you connect your test leads to match the polarity shown.

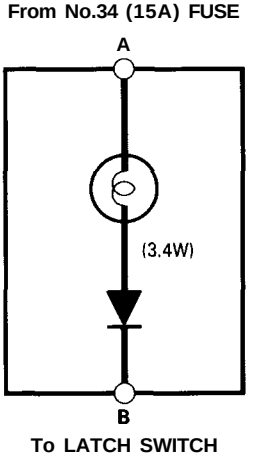

Latch Switch Test/Replacement

1. Open the trunk lid, and remove the trunk rear panel.
2. Disconnect the trunk latch 3P connector.

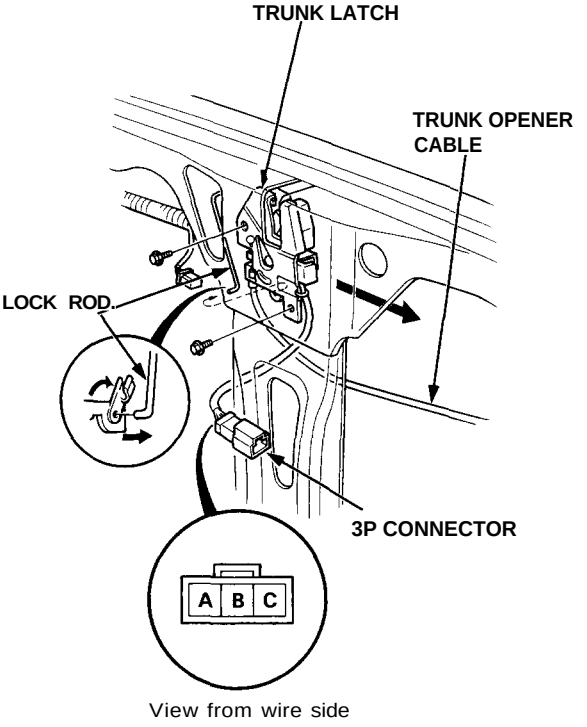

View from wire side

3. Check for continuity between the A terminal and body ground with the latch open. There should be continuity.
4. If you need to remove the latch, disconnect the lock rod from the latch, then remove the two bolts, and pull the latch toward the left side.
5. Disconnect the trunk opener cable from the latch.

Back-up Lights

Component Location Index

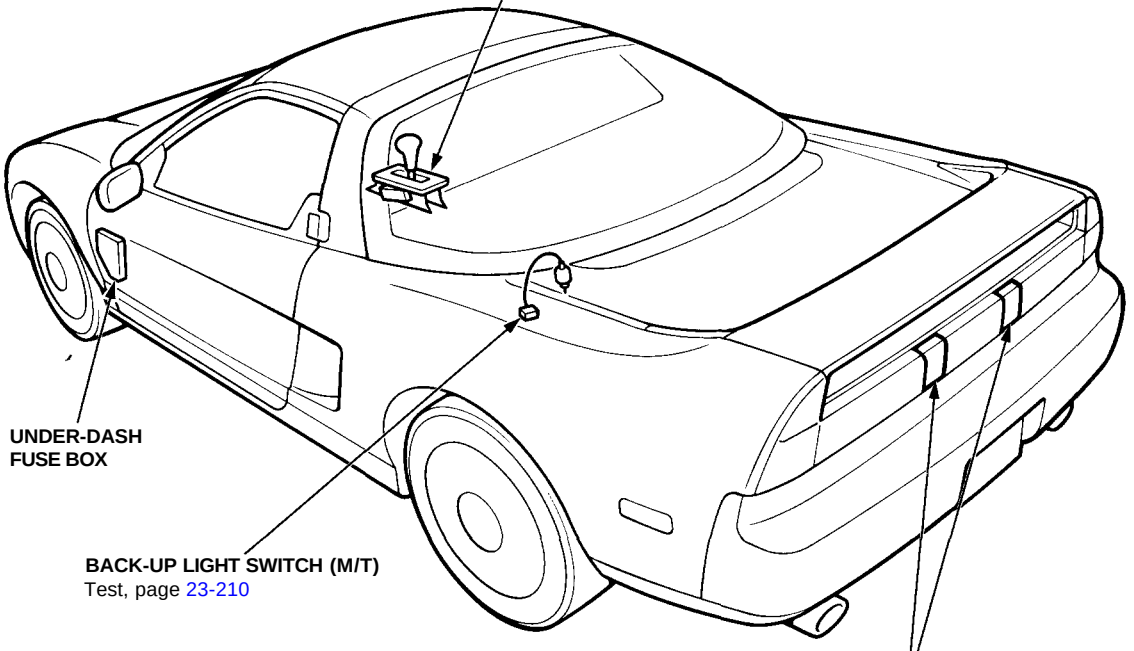

Back-up Lights

Test

Manual Transmission:

1. If only one back-up light does not go on, check that bulb in the taillight.
2. If neither back-up light goes on, check the No. 5(15 A) fuse in the under-dash fuse box.
3. If the fuse and bulbs are OK, disconnect the connector from the back-up light switch on the transmission housing.

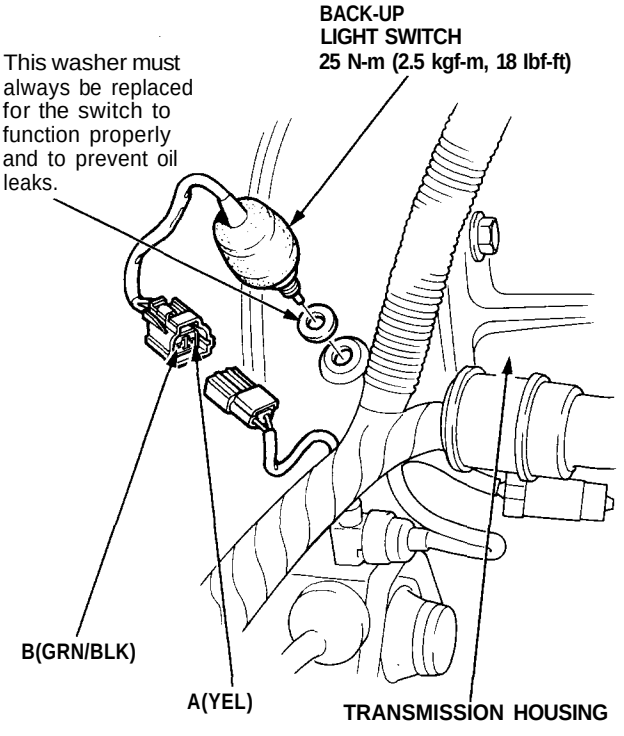

4. Check for continuity between the A (YEL) and B (GRN/BLK) wires with the switch installed. There should be continuity with the shift lever in reverse.
   - If there is no continuity, replace the switch.
   - If there is continuity, but the back-up lights do not go on, check for:

     — Poor ground (G551).
     - An open in the YEL or GRN/BLK wire.

Automatic Transmission:

1. If only one back-up light does not go on, check that bulb in the taillight.
2. If neither back-up light goes on, check the No. 5(15 A) fuse in the under-dash fuse box.
3. If the fuse and bulbs are OK, disconnect the 12P connector from the A/T gear position switch (back-up light switch).

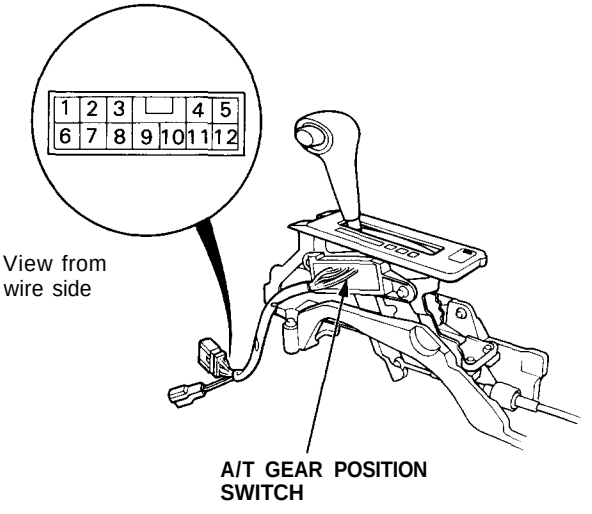

4. Check for continuity between the No. 9 and No. 10 terminals. Move the lever back and forth at the R position without touching the push button, and check for continuity within the range of free play.
   - If there is no continuity within the range of free play, adjust the position of the A/T gear position switch (see page 23-162).
   - If there is continuity, but the back-up lights do not go on, check for:
     — Poor ground (G551).
     - An open in the YEL or GRN/BLK wire.

Brake Lights

Component Location Index

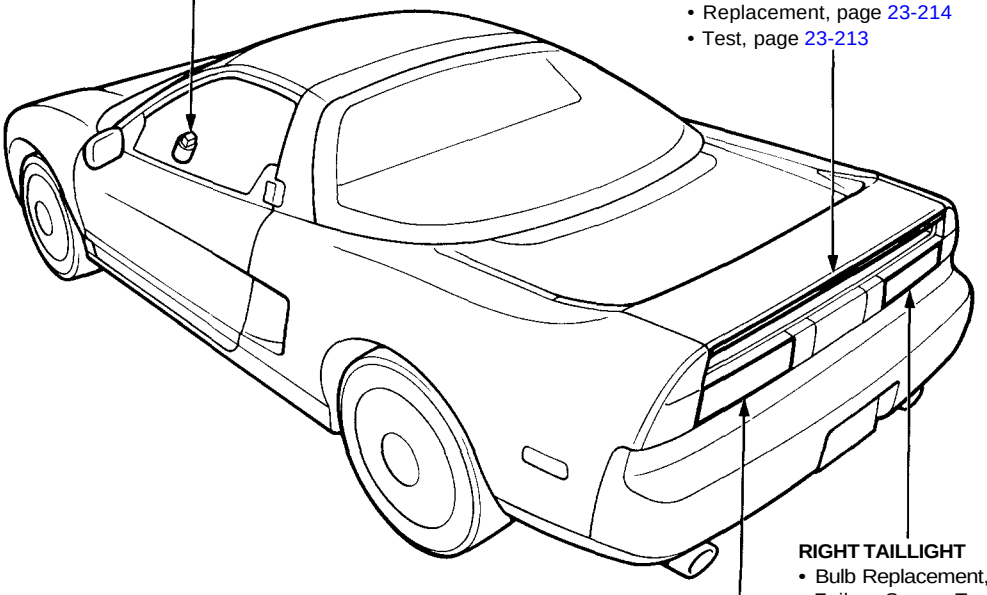

BRAKE SWITCH
Test, page 23-213

HIGH MOUNT BRAKE LIGHT (LED)
- LED Replacement, page 23-214
- Replacement, page 23-214
- Test, page 23-213

RIGHT TAILLIGHT
- Bulb Replacement, page 23-198
- Failure Sensor Test, page 23-155

LEFT TAILLIGHT
- Bulb Replacement, page 23-198
- Failure Sensor Test, page 23-155

Brake Switch Test

1. If one of the brake lights does not go on, check that brake light bulb in the taillight or the high mount light.
2. If none of the brake lights go on, check the No. 45 (20 A) fuse in the under-hood fuse/relay box.
3. If the fuse and bulbs are OK, disconnect the 4P connector from the brake switch.

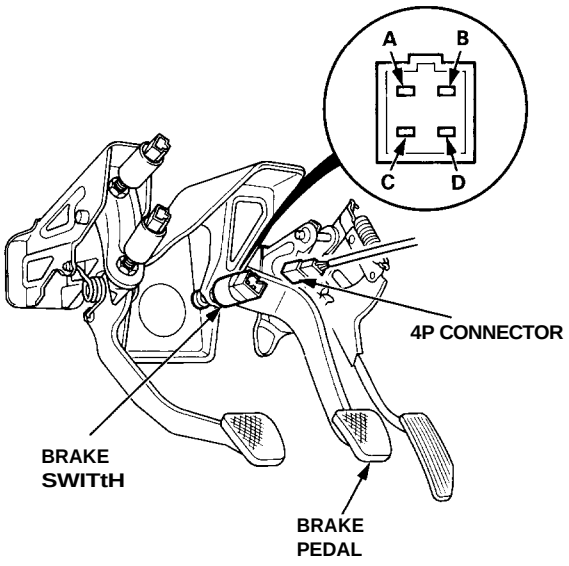

4. Check for continuity between the B and C terminals. There should be continuity with the brake pedal pushed.
   - If there is no continuity, replace the switch or adjust pedal height (see section 19).
   - If there is continuity, but the brake lights do not go on, inspect for:
     — Poor ground (G401, G402, G403, G551).
     — An open in the WHT/GRN or GRN/WHT wire.
     — Faulty brake light failure sensors (see page 23-155).

High Mount Brake Light Test

1. Open the trunk lid and engine compartment lid.
2. Disconnect the 2P connector from the trunk wire harness.

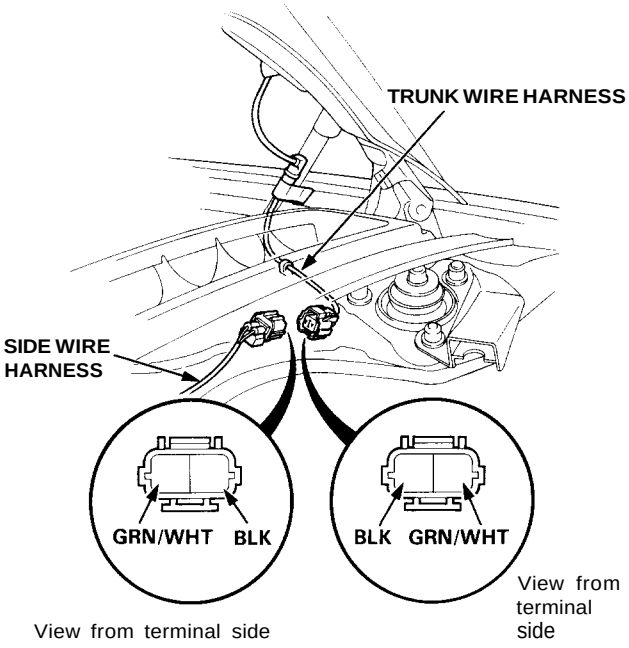

3. Connect a voltmeter positive lead to the GRN/WHT terminal and the negative lead to the BLK terminal of the side wire harness side of the connector. Push the brake pedal, and check for voltage between the GRN/WHT and the BLK terminals. There should be battery voltage.
   - If there is no voltage, check for:
     — Blown No. 45 (20 A) fuse in the under-hood fuse/relay box.
     — An open in the GRN/WHT or BLK wire.
     — Faulty brake switch.
   - If there is battery voltage, go to step 4.
4. Connect battery power to the GRN/WHT terminal and ground to the BLK terminal of the trunk wire harness side of the connector. Check that all the LEDs of the high mount brake light go on.
   - If the high mount brake light does not go on, check for an open in the wires in the trunk lid. If the wires in the trunk lid are OK, replace the high mount brake light.
   - If some of the LEDs do not go on, replace the high mount brake light assembly.

Brake Lights

High Mount Brake Light Replacement

CAUTION: Be careful not to damage the high mount brake light, rear spoiler, and trunk lid.

1. Open the trunk lid.
2. Remove the caps and five screws from the rear spoiler.

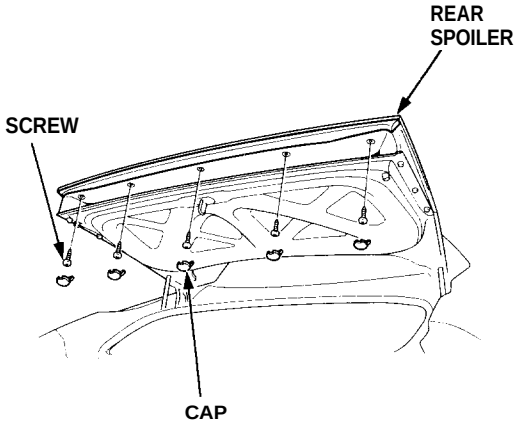

3. Carefully pall the high mount brake light out of the rear spoiler, then disconnect the 2P connector from the high mount brake light.

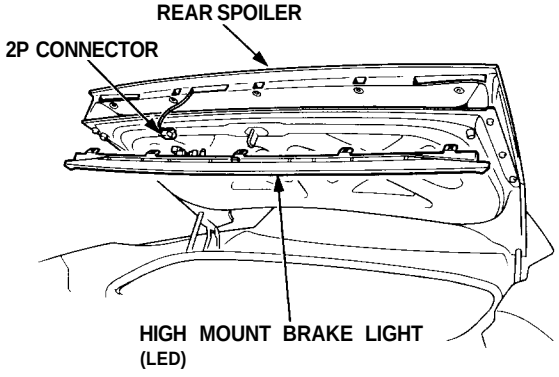

Rear Spoiler Replacement

CAUTION: Be careful not to damage the high mount brake light, rear spoiler, and trunk lid.

1. Open the trunk lid.
2. Remove the six mounting nuts.

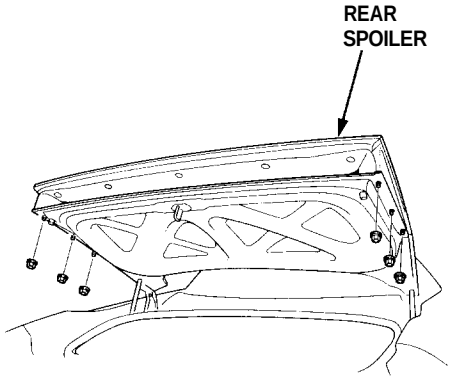

3. Carefully lift the rear spoiler assembly off the rear trunk lid.

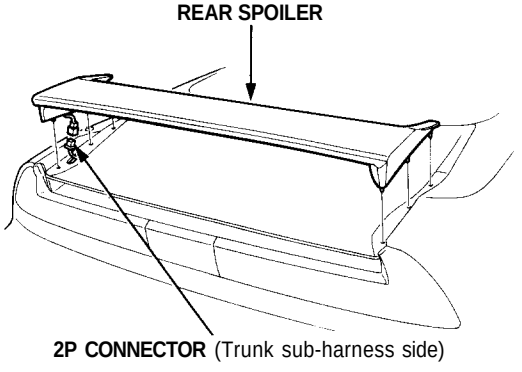

4. Disconnect the 2P connector from the trunk sub-harness.

Side Marker/Turn Signal/Hazard Flasher System

Component Location Index

SRS components are located in this area. Review the SRS component locations, precautions, and procedures in the SRS section 24 before performing repairs or service.

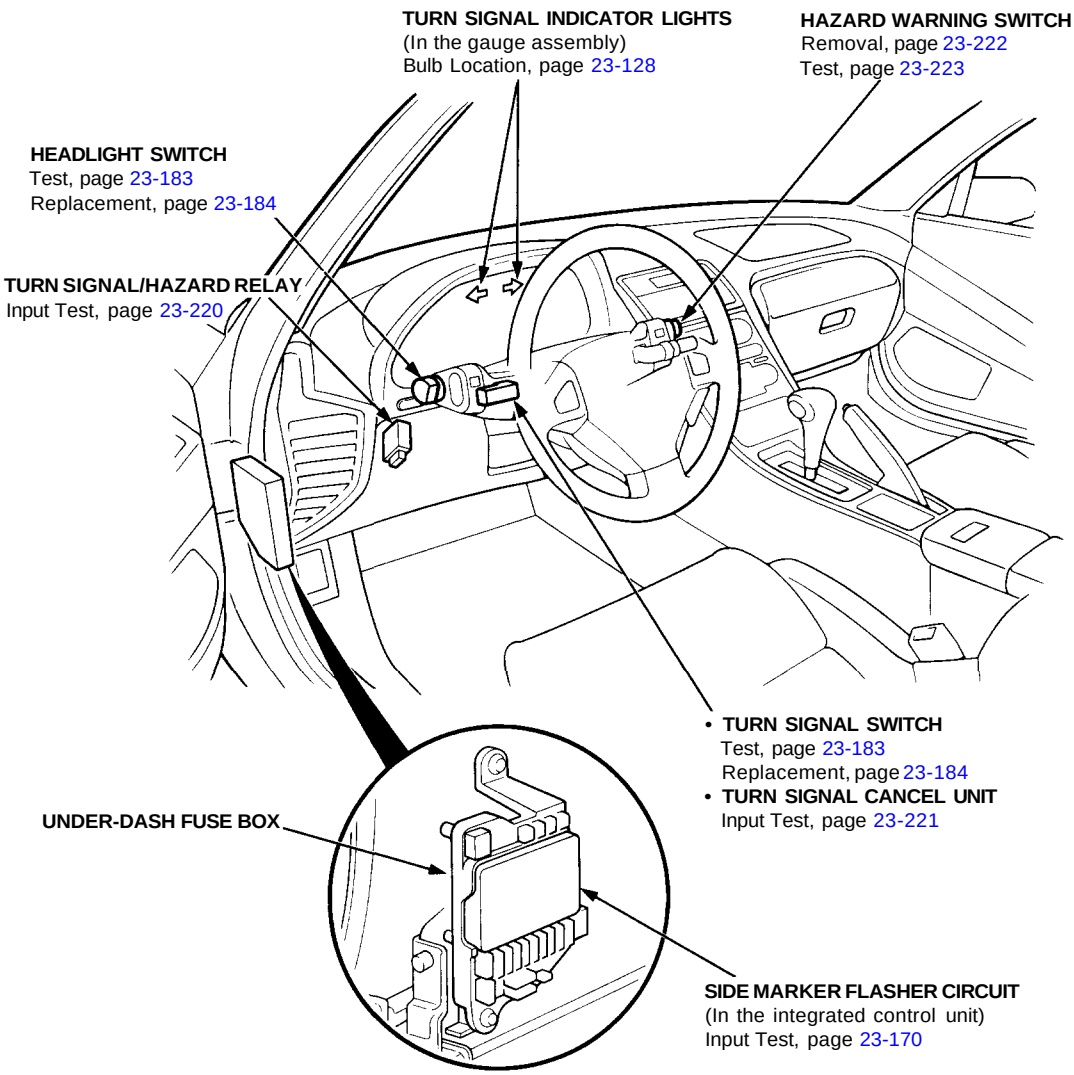

Side Marker/Turn Signal/Hazard Flasher System

Description

To cope with dimensional requirements for the airbag components and to offer better operational feel, the turn signal lever and the cancel mechanism are separated mechanically, and connected electrically instead.

The system cancels the turn signals electrically, by means of a solenoid, after a turn is made. A sensor mechanism which consists of cancel cams on the steering shaft and a pair of switches, is used to monitor the steering shaft's position.

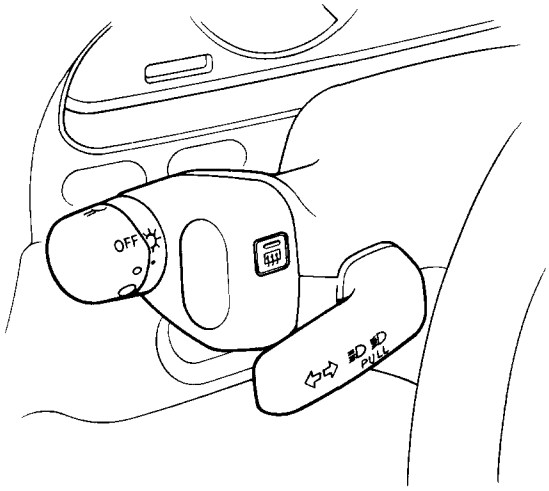

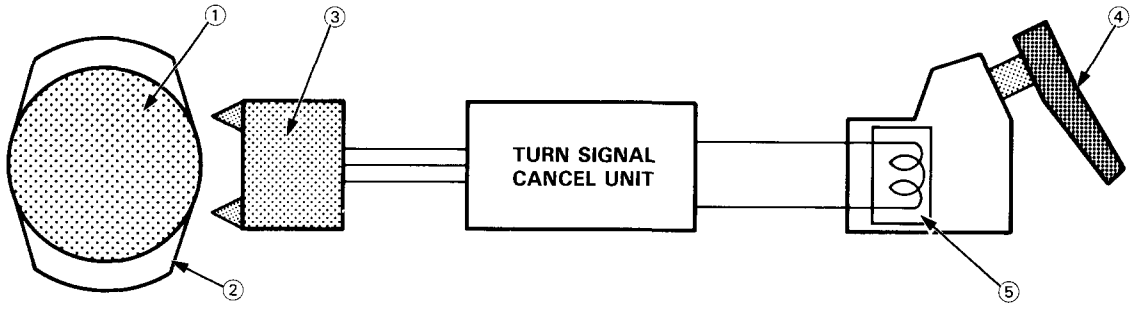

① STEERING SHAFT
② CANCEL CAM
③ CANCEL SWITCH
④ TURN SIGNAL LEVER
⑤ SOLENOID

① A cam plate is installed around the steering shaft. A pair of switches (A and B) are installed beside it.
② When the steering is turned in direction of the arrow, switch A turns on first.
③ Then switch B turns on.

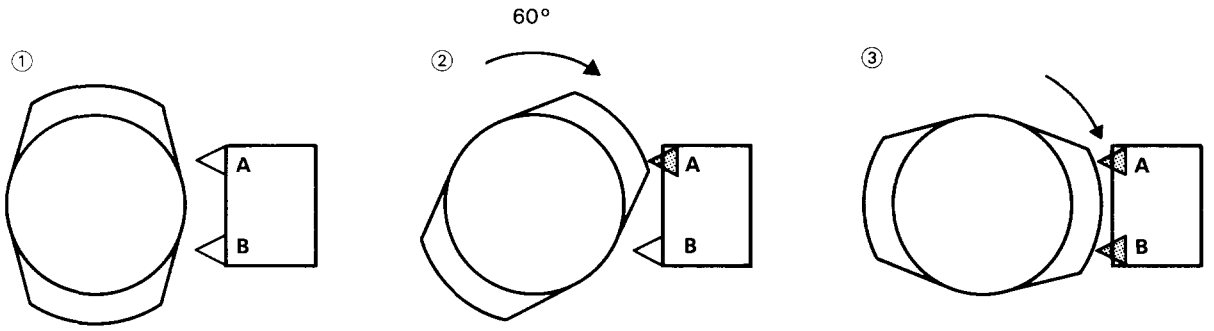

The cancel unit monitors the on-off sequence of both switches. Once it receives a full set of signals for a right or left turn, it energizes the solenoid which then moves the turn signal lever back to neutral.

RIGHT TURN SIGNAL

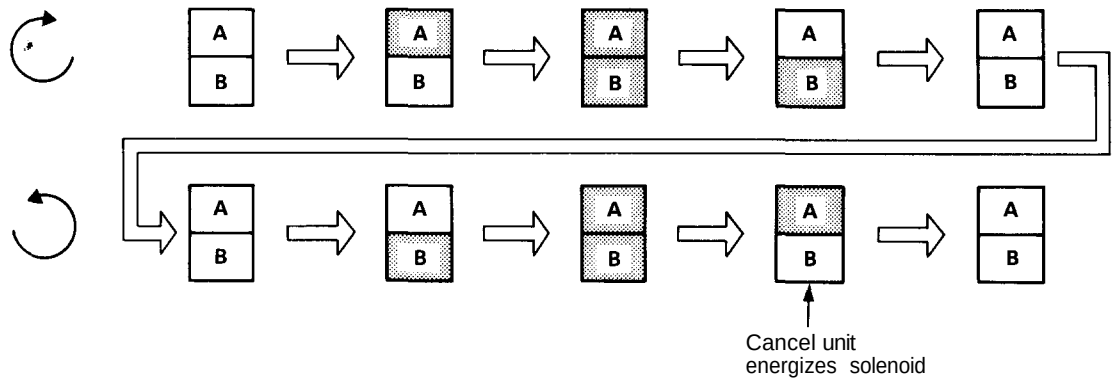

LEFT TURN SIGNAL

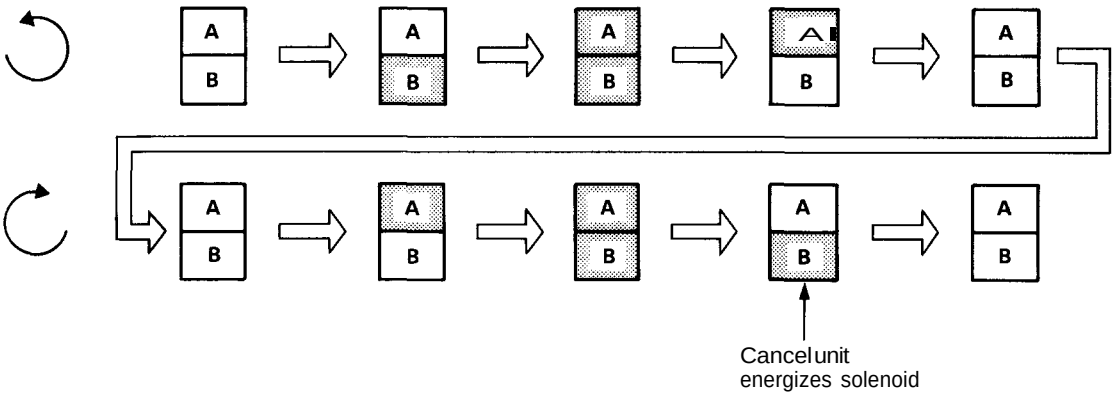

Side Marker/Turn Signal/Hazard Flasher System

Turn Signal/Hazard Relay Input Test

1. Remove the dashboard lower cover. Remove the turn signal/hazard relay from the left kick panel, then disconnect the 6P connector.

2. Inspect the connector and socket terminals to be sure they are all making good contact.

   - If the terminals are bent, loose or corroded, repair them as necessary, and recheck the system.
   - If the terminals look OK, make the following input tests at the connector.
     — If any test indicates a problem, find and correct the cause, then recheck the system.
     — If all the input tests prove OK, the control unit must be faulty; replace it.

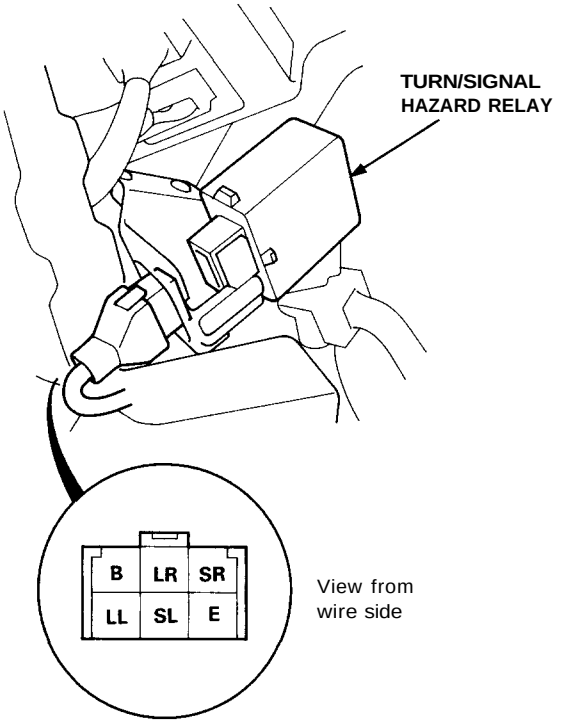

Terminal	Test condition	Test: Desired result	Possible cause if result is not obtained
E (BLK)	Under all conditions	Check for continuity to ground: There should be continuity.	• Poor ground (G401, G402, G403) • An open in the wire
B (RED/WHT)	Under all conditions	Check for voltage to ground: There should be battery voltage.	• Blown No. 46 (10 A) fuse • An open in the wire
SR (BLU/YEL)	Ignition switch ON (II) and turn signal switch in right position	Check for voltage to ground: There should be battery voltage.	• Blown No. 5 (15 A) fuse • Faulty turn signal switch or cancel unit • An open in the wire
SL (BLU/GRN)	Ignition switch ON and turn signal switch in left position		
SR (BLU/YEL)	Hazard warning switch ON	Check for voltage to ground: There should be battery voltage.	• Faulty hazard warning switch • An open in the wire
SL (BLU/GRN)			
LR (GRN/YEL)	Connect the B terminal to the LR terminal.	The right turn signal lights should come on.	• Blown bulb • Faulty side marker flasher circuit • Poor ground (G301, G401, G402, G403, G551) • An open in the wire
LL (GRN/BLU)	Connect the B terminal to the LL terminal.	The left turn signal lights should come on.	• Blown bulb • Faulty side marker flasher circuit • Poor ground (G301, G401, G402, G403, G551) • An open in the wire

Cancel Unit Input Test

1. Remove the steering column covers. Disconnect the 10P connector from the turn signal cancel unit.
2. Inspect the connector terminals to be sure they are all making good contact.
   - If the terminals are bent, loose or corroded, repair them as necessary, and recheck the system.
   - If the terminals look OK, make the following input tests at the connector.
     — If any test indicates a problem, find and correct the cause, then recheck the system.
     — If all the input tests prove OK, the control unit must be faulty; replace it.

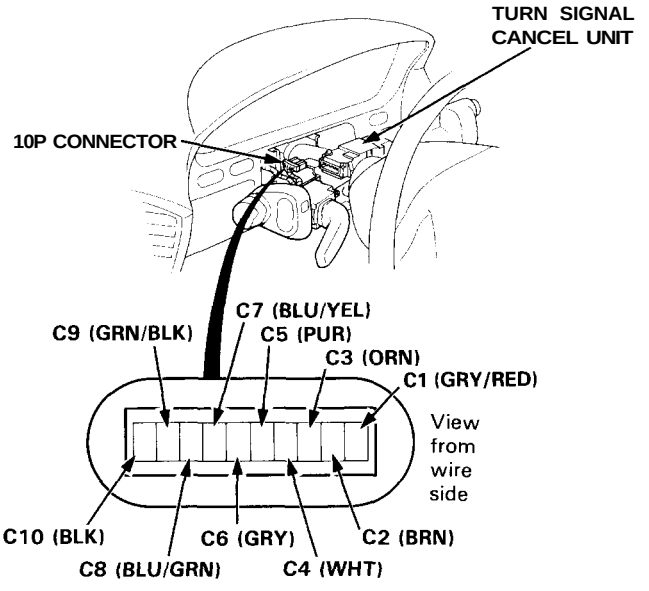

Terminal	Test condition	Test: Desired result	Possible cause if result is not obtained
C10 (BLK)	Under all conditions	Check for continuity to ground: There should be continuity.	• Poor ground (G401, G402, G403) • An open in the wire
C1 (GRY/RED)	Ignition switch on (II)	Check for voltage to ground: There should be battery voltage.	• Blown No. 5 (15 A) fuse • An open in the wire
C5 (PUR)	Headlight switch "•"	Check for voltage to ground: There should be approx. 5 volt.	• Faulty headlight switch or taillight relay • An open in the wire
C2 (BRN) C6 (GRY)	Turn signal switch in right position	Check for continuity between the C2 and C6 terminals: There should be continuity.	• Faulty turn signal switch • An open in the wire
C2 (BRN) C9 (GRN/BLK)	Turn signal switch in left position	Check for continuity between the C2 and C9 terminals: There should be continuity.	• Faulty turn signal switch • An open in the wire
C3 (ORN) C4 (WHT)	Under all conditions	Check for continuity between the C3 and C4 terminals: There should be continuity.	• Faulty cancel solenoid • An open in the wire
C7 (BLU/YEL)	Connect the C1 terminal to the C7 terminal, then turn the ignition switch ON (II).	The right turn signal lights should come on.	• Blown bulb • Faulty turn signal/hazard relay • Poor ground (G301, G401, G402, G403, G551) • An open in the wire
C8 (BLU/GRN)	Connect the C1 terminal to the C8 terminal, then turn the ignition switch ON (II).	The left turn signal lights should come on.	• Blown bulb • Faulty turn signal/hazard relay • Poor ground (G301, G401, G402, G403, G551) • An open in the wire

Hazard Warning Switch Replacement

SRS components are located in this area. Review the SRS component locations, precautions, and procedures in the SRS section 24 before performing repairs or service.

1. Remove the dashboard lower cover, and disconnect the connectors.
2. Remove the dashboard lower pad.

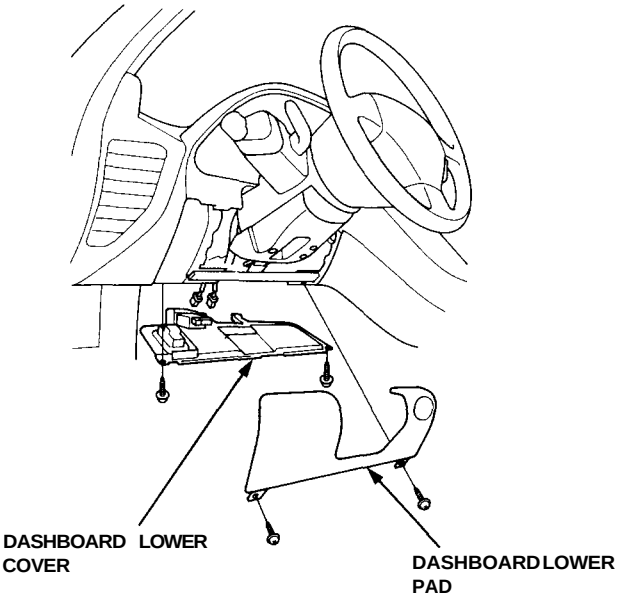

3. Remove the tilt cover.

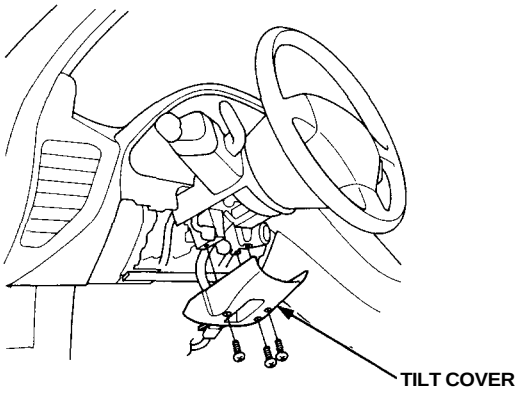

4. Remove the steering column covers.

NOTE: Be careful not to damage the steering column covers.

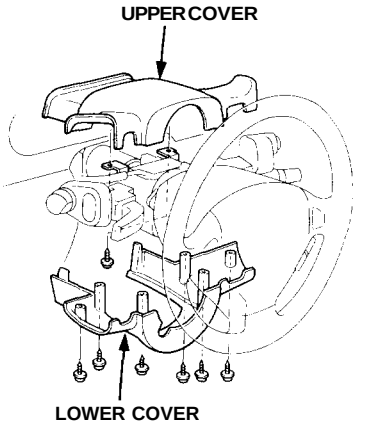

5. Disconnect the 20P, 4P, and 5P connectors.

CAUTION: Be careful not to damage the SRS wire harness.

6. Remove the six screws, then remove the hazard warning-wiper switch assembly.

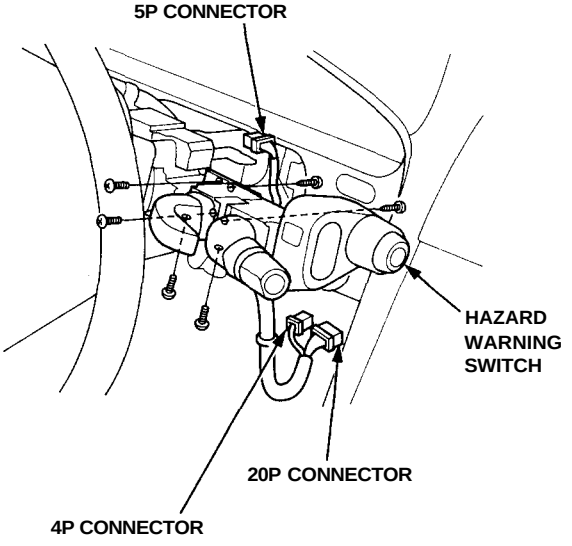

7. Remove the screws, then separate the hazard warning switch from the other switches.

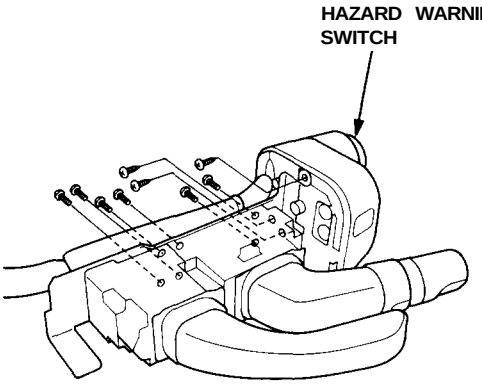

8. If necessary, remove the hazard warning switch bulb.

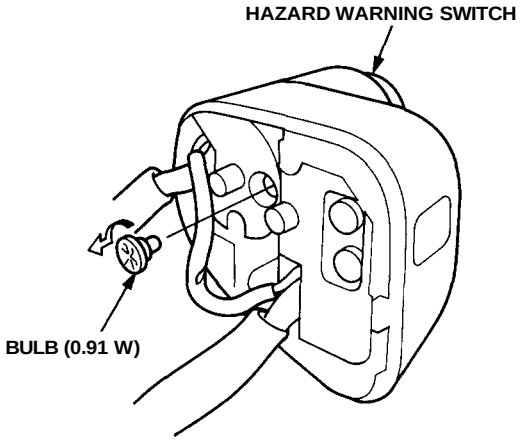

Hazard Warning Switch Test

1. Remove the dashboard lower cover (see page 23-222).

2. Disconnect the 20P connector from the floor wire harness.

3. Check for continuity between the terminals, in each switch position, according to the table.

Position \ Terminal	F		D	E	N	G		H
OFF								
ON	○	▶|	○			○	⊗	○
		▶|		○				
		▶|			○			

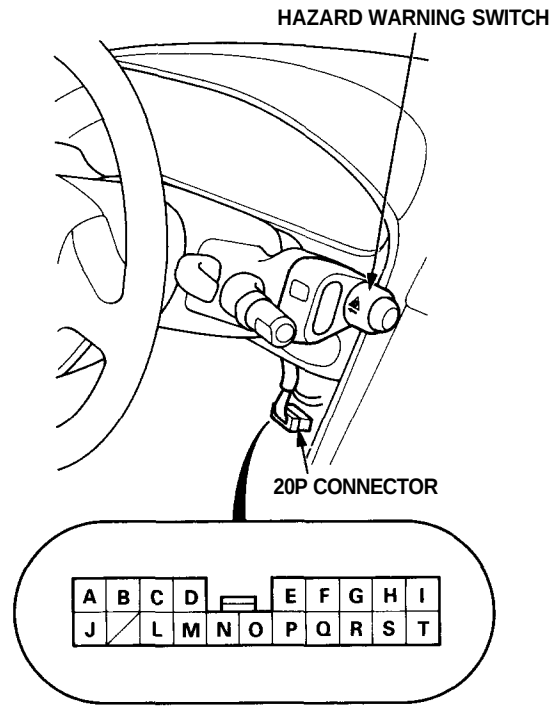

View from wire side

Terminal N is not used.

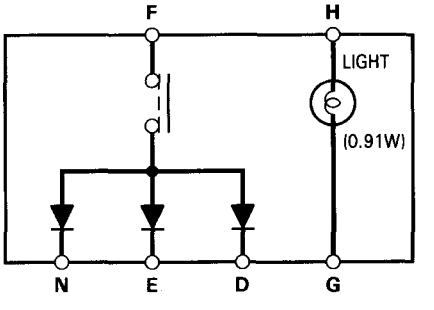

Dash Lights Brightness Control

Component Location Index

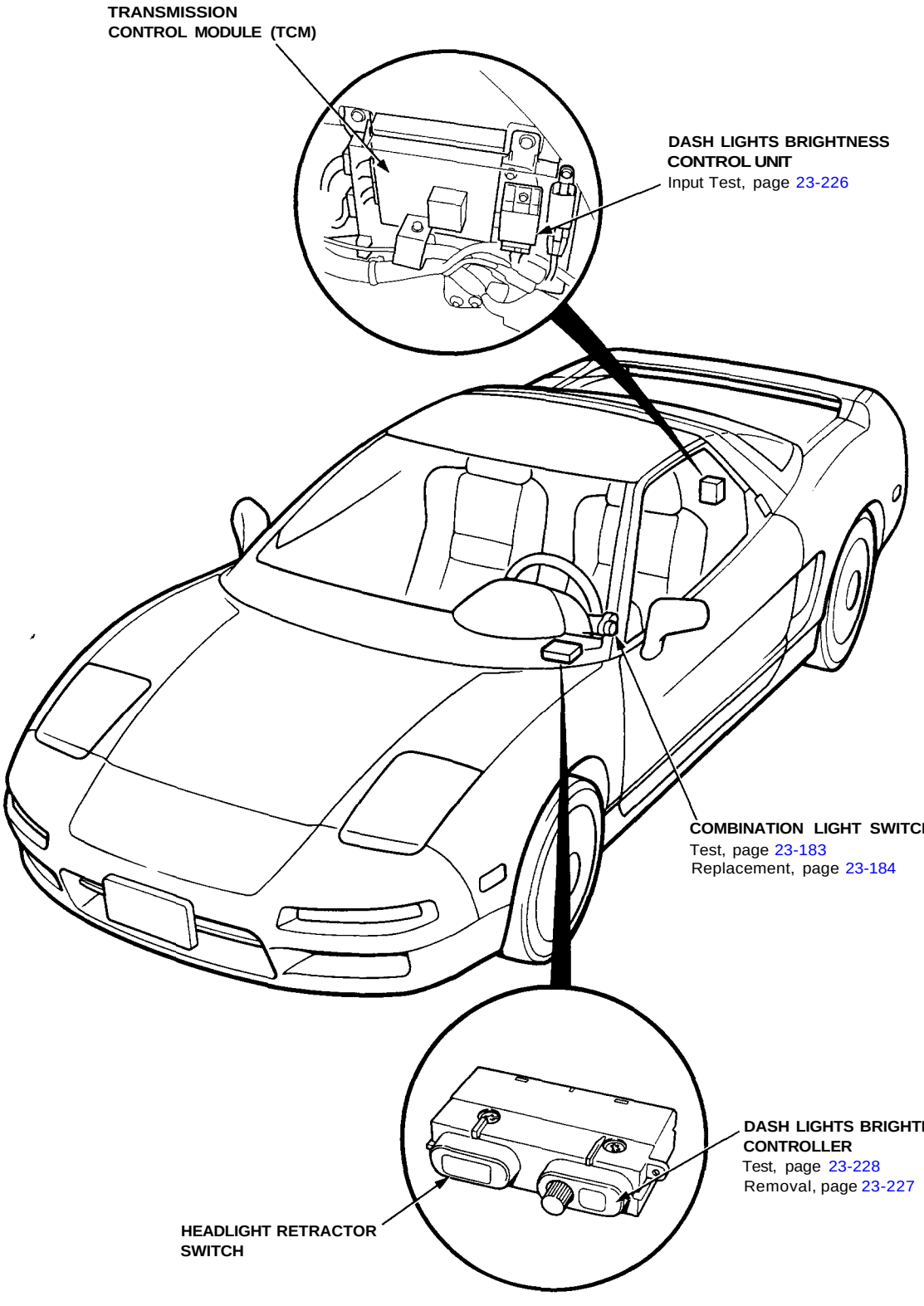

Dash Lights Brightness Control

Control Unit Input Test

1. Disconnect the 7P connector from the control unit.

2. Inspect the connector and socket terminals to be sure they are all making good contact.

   - If the terminals are bent, loose or corroded, repair them as necessary, and recheck the system.
   - If the terminals look OK, make the following input tests at the connector.
     — If any test indicates a problem, find and correct the cause, then recheck the system.
     — If all the input tests prove OK, the control unit must be faulty; replace it.

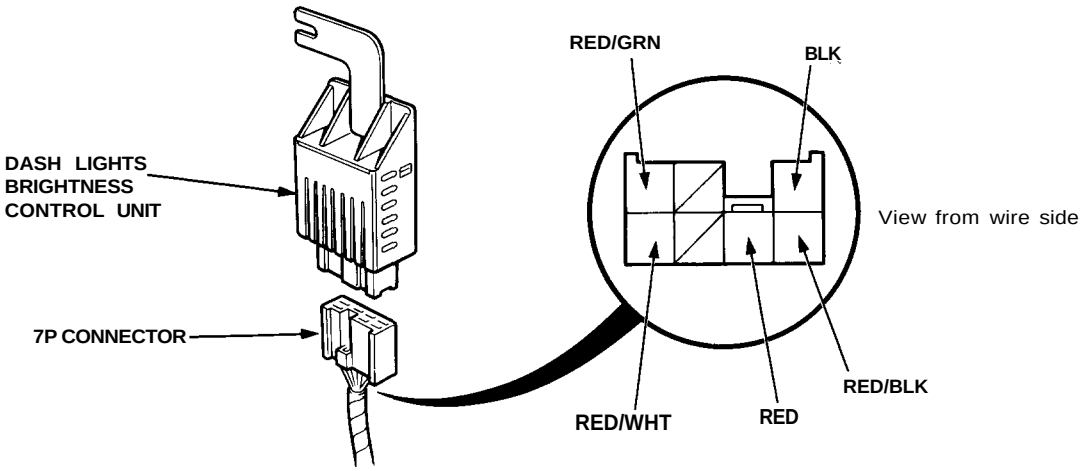

Terminal	Test condition	Test: Desired result	Possible cause if result is not obtained
BLK	Under all conditions	Check for continuity to ground: There should be continuity.	• Poor ground (G401, G402, G403) • An open in the wire
RED/BLK	Headlight switch ON	Check for voltage to ground: There should be battery voltage.	• Blown No. 38 (15 A) fuse • Faulty taillight relay • Faulty headlight switch • An open in the wire
RED	Headlight switch ON	Attach to ground: The dash lights should come on full bright.	• An open in the RED/BLK or RED wire
RED/GRN and RED/WHT	Adjusting dial rotating	Check for resistance between the RED/GRN and RED/WHT terminals: It should vary from 0 to 20,000 ohms as the dial is rotated.	• Faulty dash lights brightness controller • An open in the wire

Controller Removal

SRS components are located in this area. Review the SRS component locations, precautions, and procedures in the SRS section 24 before performing repairs or service.

1. Remove the dashboard lower cover, and disconnect the connectors.

2. Remove the dashboard lower pad.

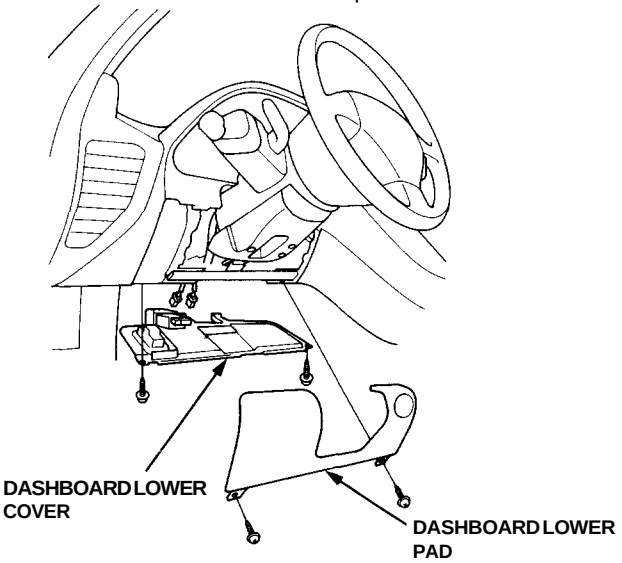

3. Remove the tilt cover.

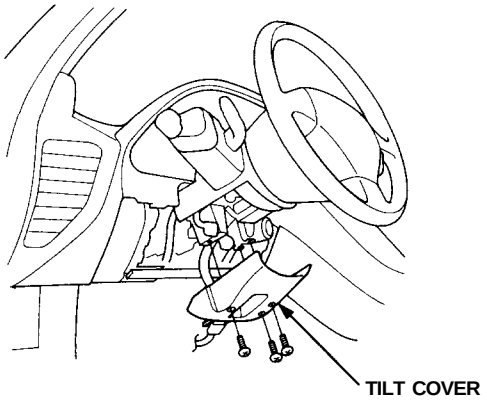

4. Remove the steering column covers.

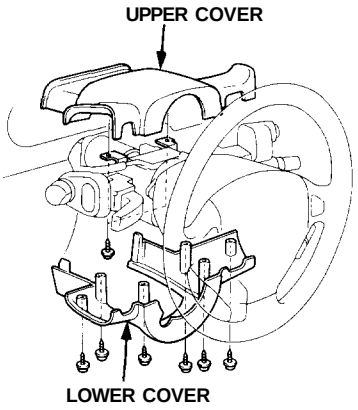

5. Disconnect the 5P and 10P connectors from each switch.

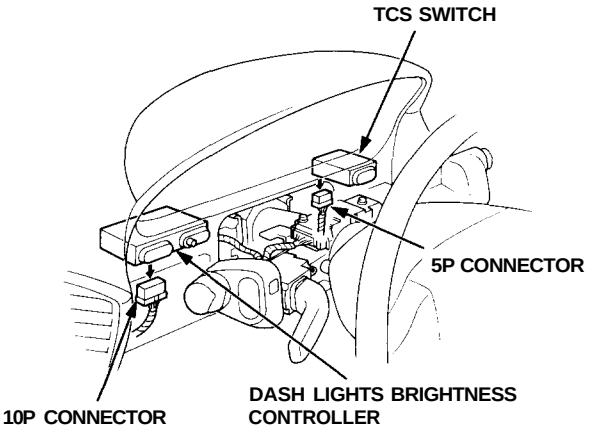

6. Remove the six screws, then remove the instrument panel trim from the dashboard.

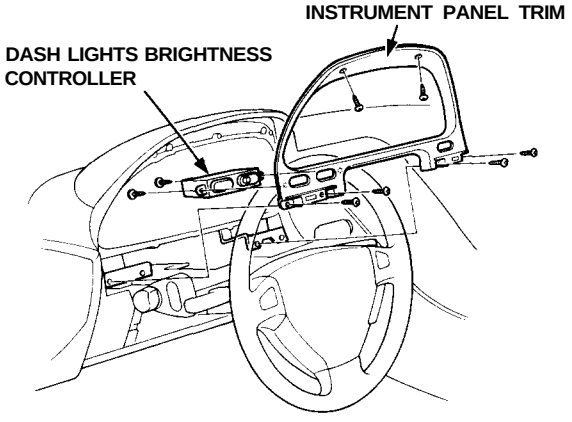

7. Remove two screws, then remove the dash lights brightness controller from the instrument panel trim.

Dash Lights Brightness Control

Controller Test

1. Remove the dash lights brightness controller from the instrument panel trim (see previous page).
2. Measure resistance between A and B terminals while rotating the adjusting dial. Resistance should vary from 0 to 20,000 ohms as the dial is rotated.

   NOTE: Resistance will vary slightly with temperature.

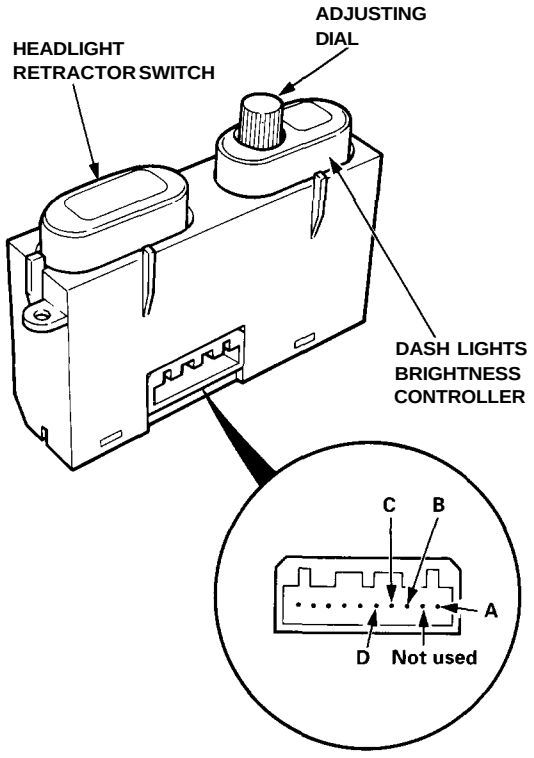

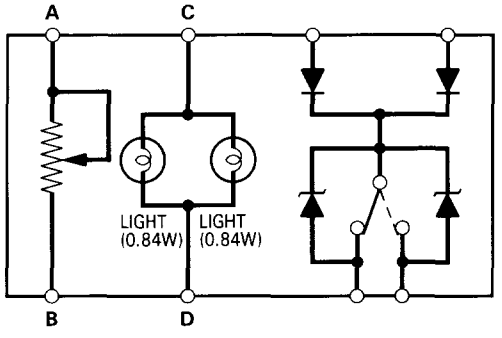

Controller Light Bulb Replacement

1. Remove the dash lights brightness controller.
2. Turn the socket 45° counterclockwise to remove it.

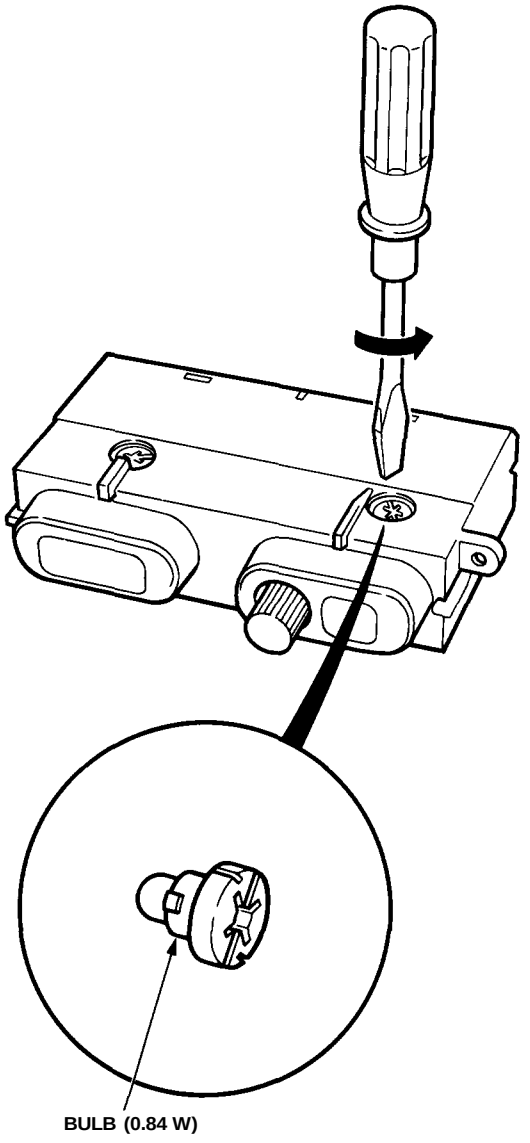

Entry Light Timer System

Component Location Index

SRS components are located in this area. Review the SRS component locations, precautions, and procedures in the SRS section 24 before performing repairs or service.

Description: If the driver's door has been opened by the outer handle, the foot well light and a light at the ignition switch go on and stay on for about eight seconds after the driver's door has been closed.

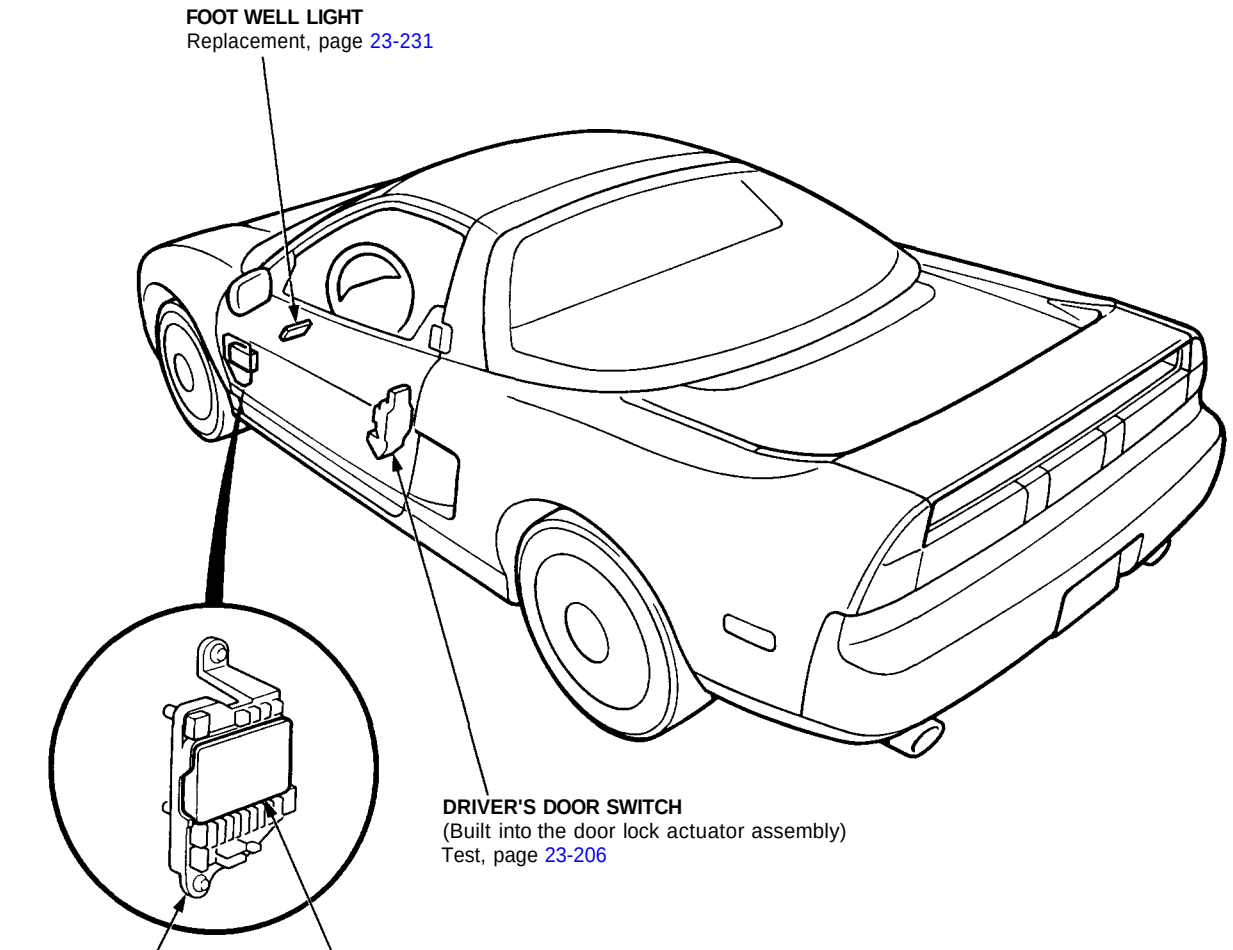

Foot Well Light Replacement

1. Remove the dashboard lower cover.
2. Disconnect the 2P connector from the foot well light.

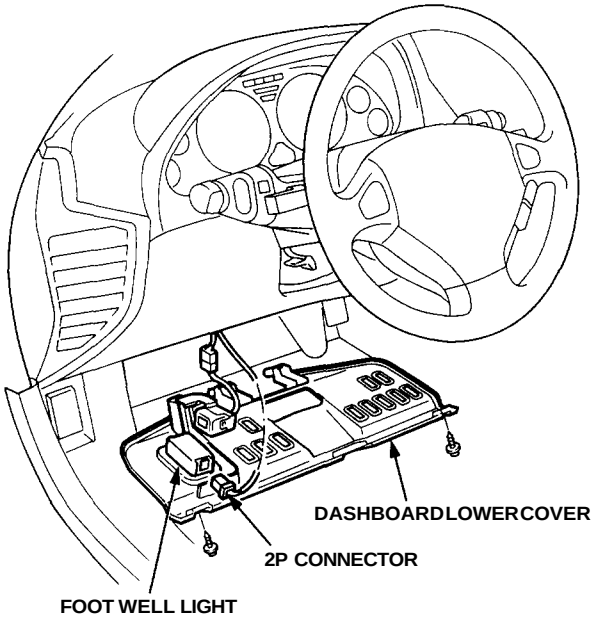

3. Push the foot well light out of the dashboard lower cover.
4. Open the foot well light cover, then remove the bulb from the housing.

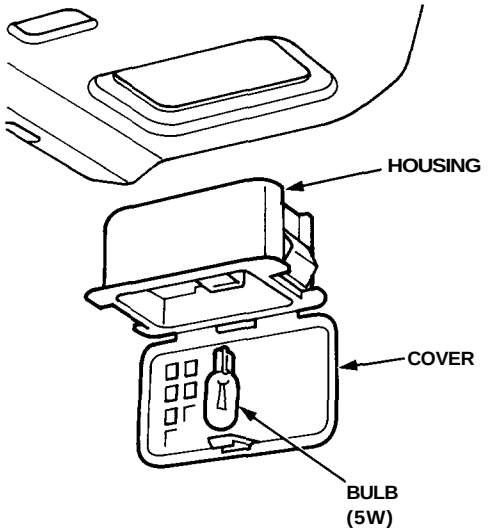

Removal

CAUTION: Be careful not to damage the center air vent or clock.

1. Pull the clock out with your fingers (if necessary, use a screwdriver).
2. Disconnect the 4P connector from the clock.

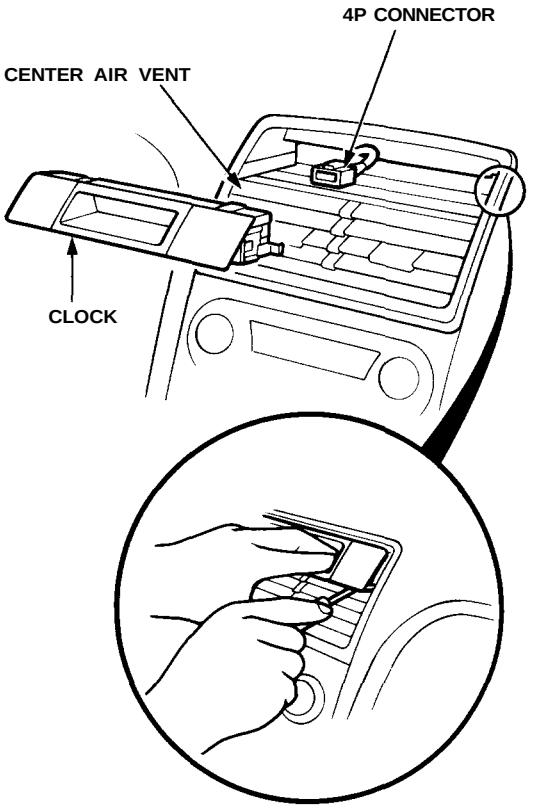

Terminals

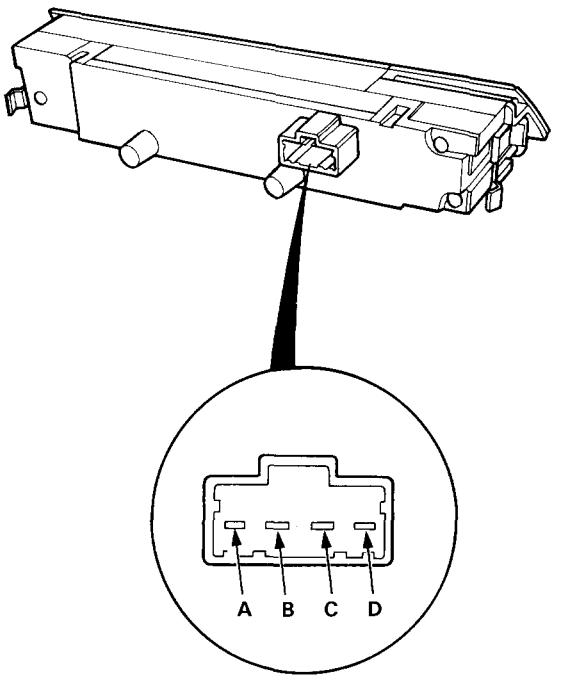

Terminal	Wire	Connects to
A	BLK	Ground
B	RED/BLK	Lights-on signal
C	WHT/YEL	Constant power (Time memory)
D	YEL	IG1 (Main clock power supply)

Replacement

SRS components are located in this area. Review the SRS component locations, precautions, and procedures in the SRS section 24 before performing repairs or service.

1. Remove the clock (see page 23-233).
2. Remove the two screws behind the clock, then remove the center air vent (see section 20).
3. Remove the four screws, then remove the center armrest.
4. Take out the ashtray.
5. Remove the five screws and center console panel, then disconnect the 3P connector and 4P connector from the floor wire harness.

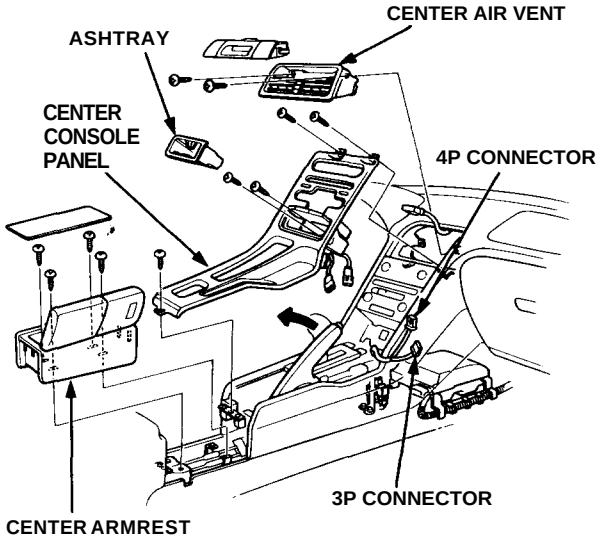

6. Disconnect the thermo fuse case from the end of the cigarette lighter socket.
7. Remove the ring nut, and separate the cigarette lighter socket from the thermal protector.
8. When installing the cigarette lighter, align each lug on the face panel, illumination ring and cigarette lighter socket with the groove in the hole, then position the bulb housing on the thermal protector between the stops on the center console panel.
9. Make sure that the ground, bulb socket and thermo fuse case are seated against the cigarette lighter assembly.

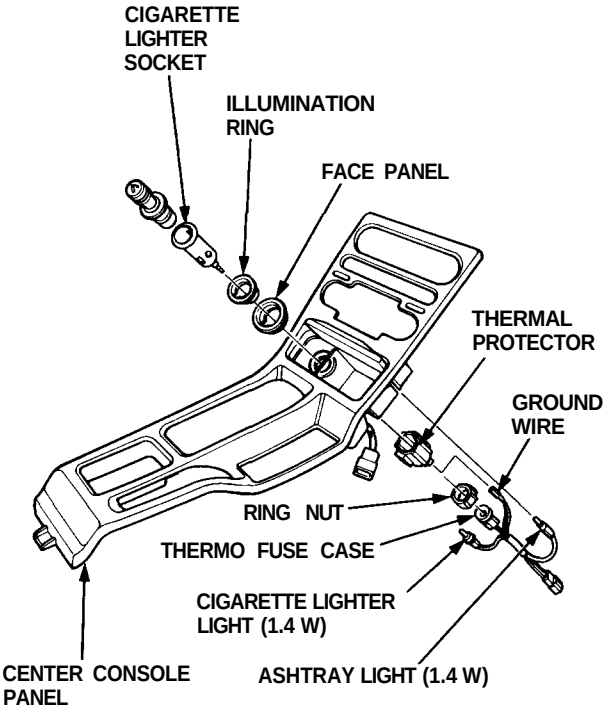

Cigarette Lighter

Relay Test

1. Remove the glove box (see section 20).
2. Disconnect the 4P connector from the cigarette lighter relay (wire colors of 4P connector: BLU/GRN, YEL/RED, BRN/YEL, BLK).
3. Check continuity at the relay terminals.
   - There should be continuity between the C and D terminals.
   - There should be continuity between the A and B terminals when power and ground are connected to the C and D terminals.
   - There should be no continuity between the A and B terminals when power is disconnected.

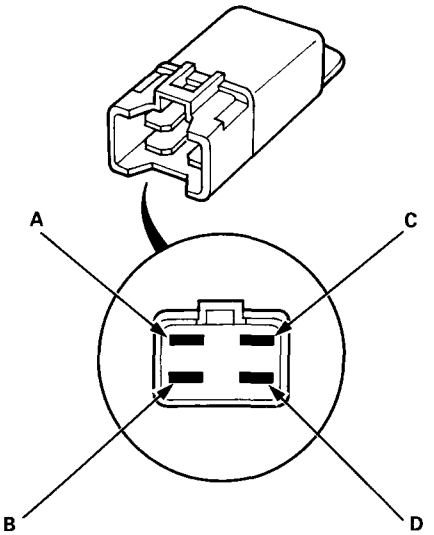

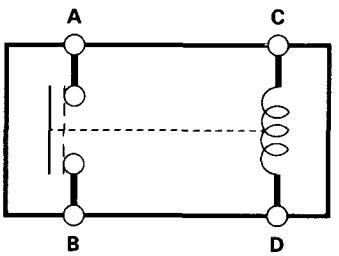

Stereo Sound System

Component Location Index

SRS components are located in this area. Review the SRS component locations, precautions, and procedures in the SRS (section 24) before performing repairs or service.

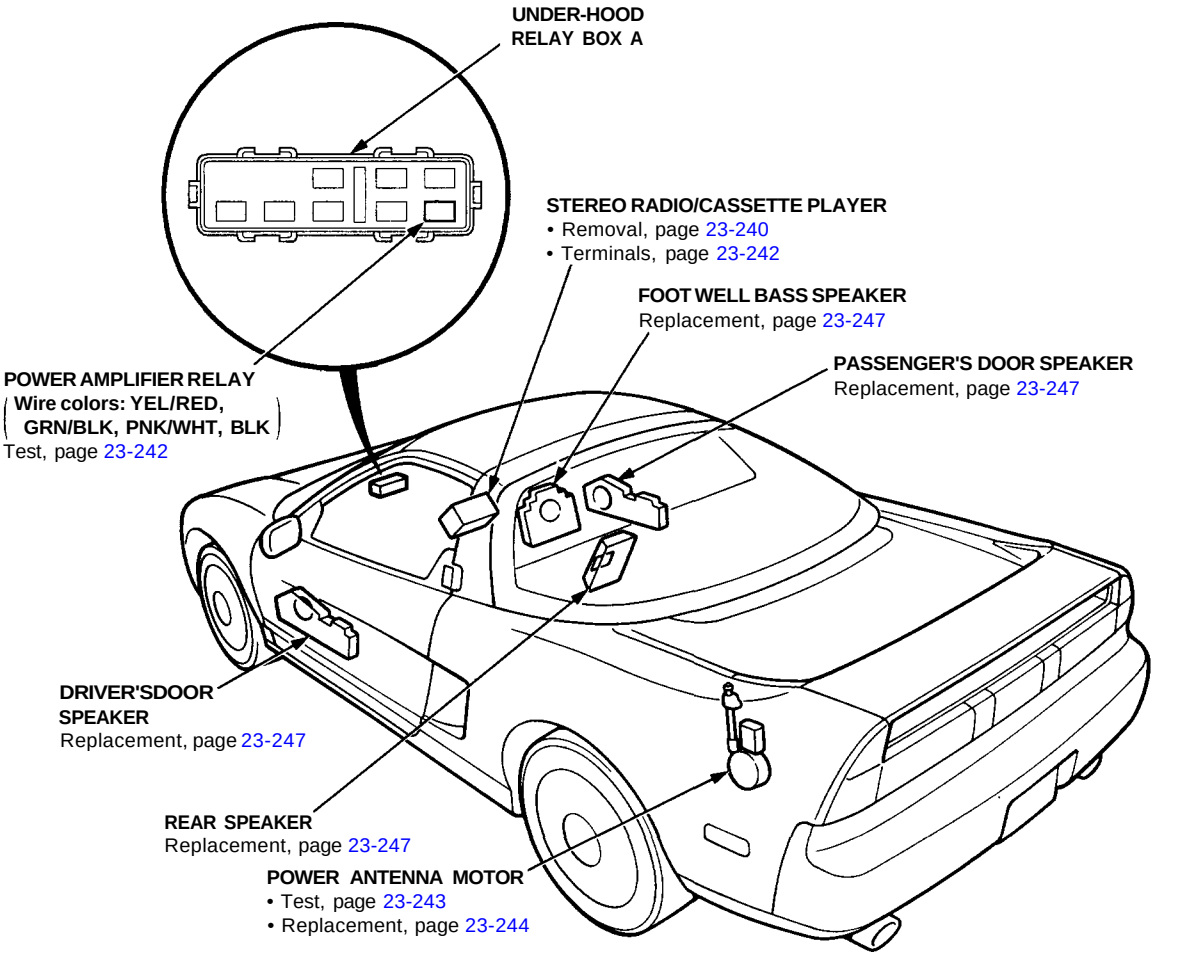

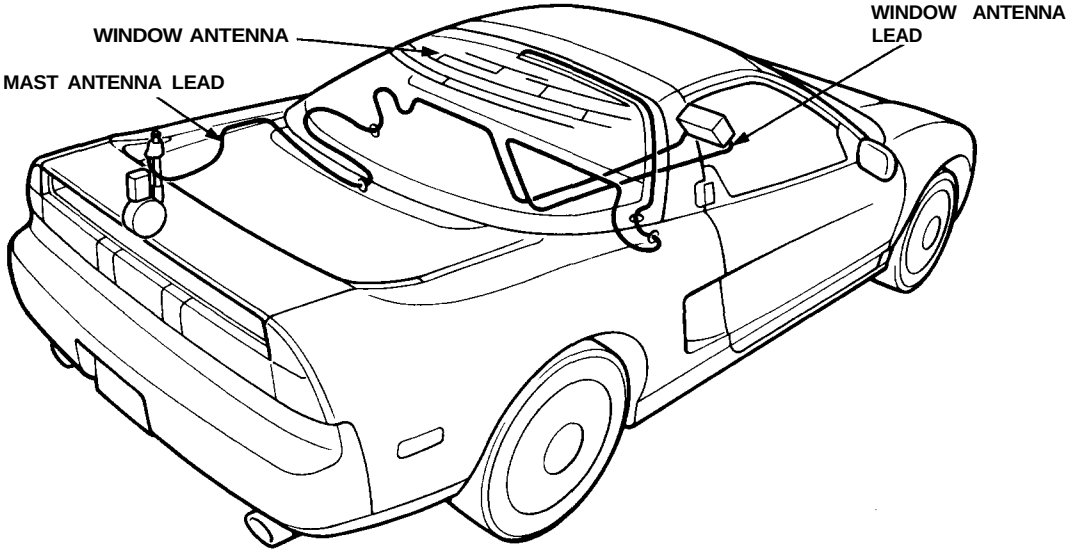

Unit Removal

SRS components are located in this area. Review the SRS component locations, precautions, and procedures in the SRS section 24 before performing repairs or service.

1. Remove the clock (see page 23-233).
2. Remove the two screws behind the clock, then remove the center air vent (see section 20).

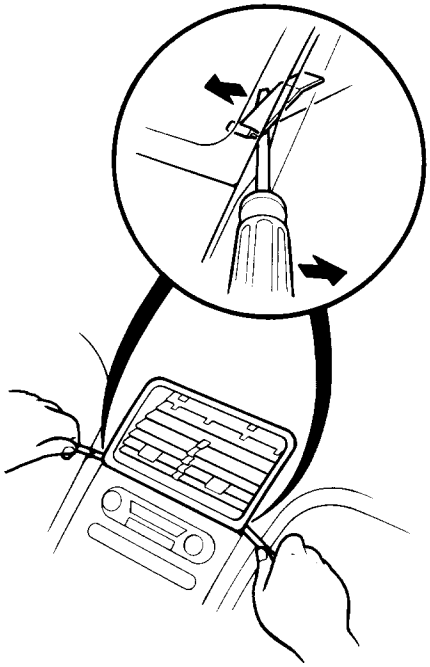

3. Remove the four screws, then remove the center armrest.

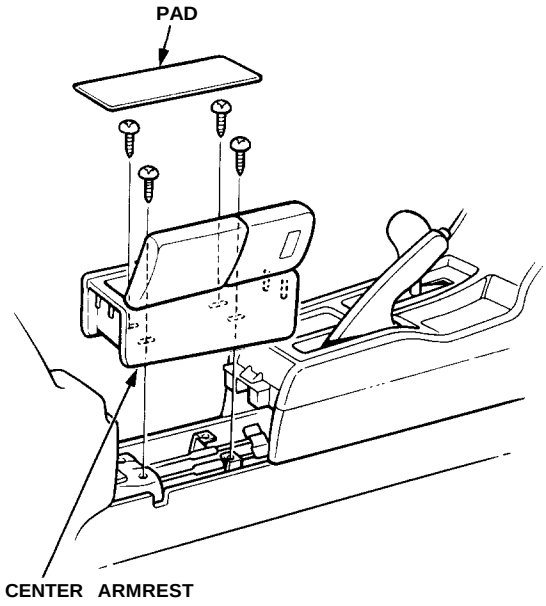

4. Take out the ashtray.

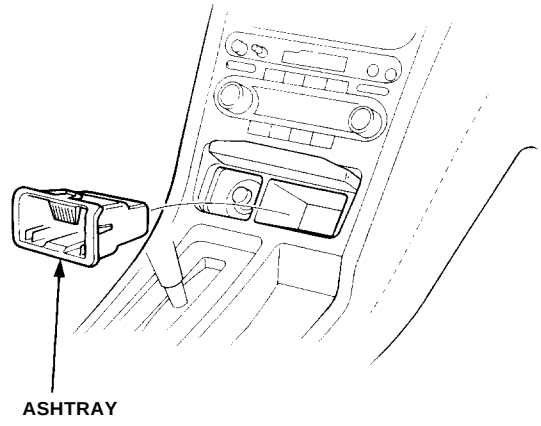

5. Remove the five screws and center console panel, then disconnect the 3P connector and 4P connector from the floor wire harness.

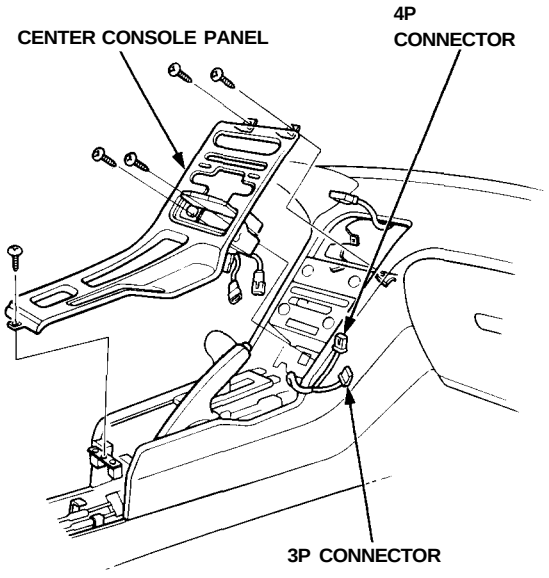

6. Remove the four screws, then disconnect the 14P and 30P connectors from the floor wire harness and take out the climate control unit.

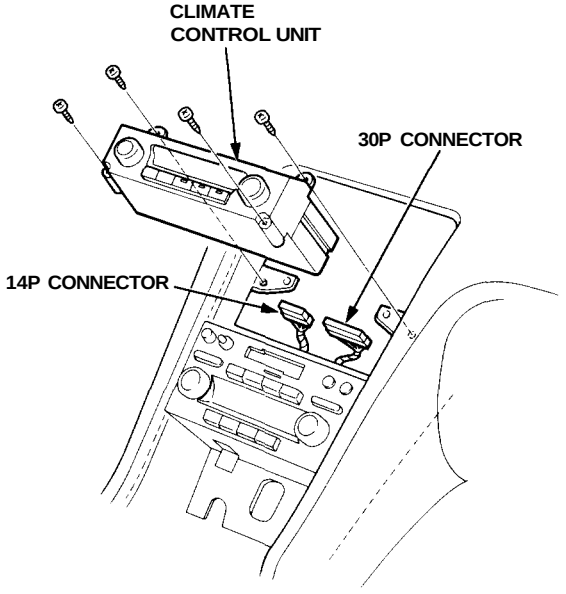

7. Remove the four screws, then disconnect the 16P connector, mast antenna lead, and window antenna lead and take out the stereo radio/cassette player.

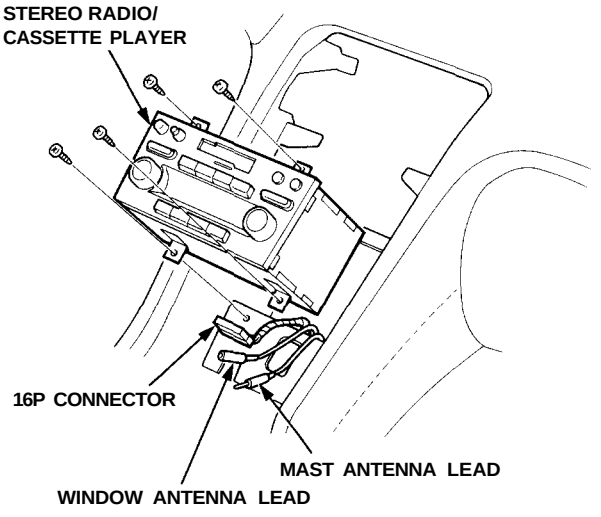

Stereo Sound System

Unit Terminals

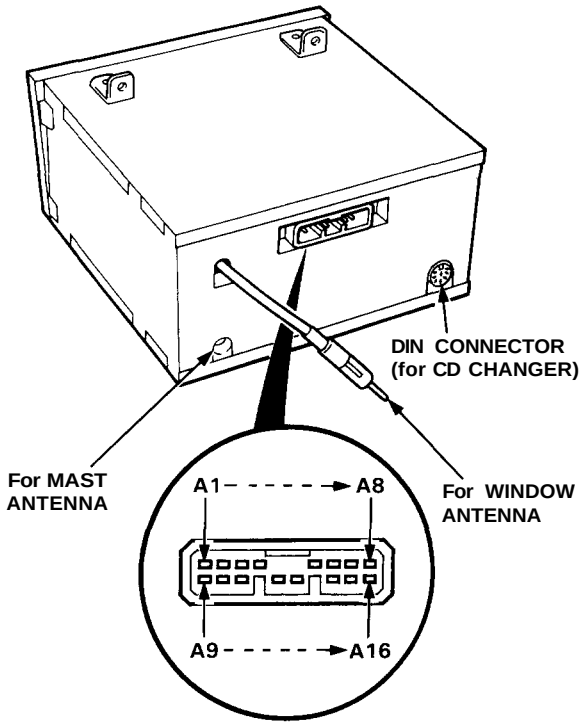

Terminal	Wire	Connects to
A1	WHT	Passenger's door speaker amplifier ⊕
A2	WHT	Driver's door speaker amplifier ⊕
A3	RED/BLK	Lights-on signal
A4	WHT/YEL	Constant power (Tuning memory)
A5	YEL/RED	ACC (I) (Main stereo power supply)
A6	PNK/WHT	Radio switched power (To antenna and relay)
A7	WHT	Foot well bass speaker (Driver's ⊕)
A8	WHT	Foot well bass speaker (Passenger's ⊕)
A9	ORN	Passenger's door speaker amplifier ⊖
A10	ORN	Driver's door speaker amplifier ⊖
A11	ORN/WHT	Cellular phone mute signal
A12	BLK/BRN	Security (IN)
A13	BLK/LT GRN	Security ground (G404)
A14	BLK	Ground (G401, G402, G403)
A15	ORN	Foot well bass speaker (Driver's ⊖)
A16	ORN	Foot well bass speaker (Passenger's ⊖)

Power Amplifier Relay Test

1. Remove the power amplifier relay from under-hood relay box B.
2. Check continuity at the relay terminals.
   - There should be continuity between the C and D terminals.
   - There should be continuity between the A and B terminals when power and ground are connected to the C and D terminals.
   - There should be no continuity between the A and B terminals when power is disconnected.

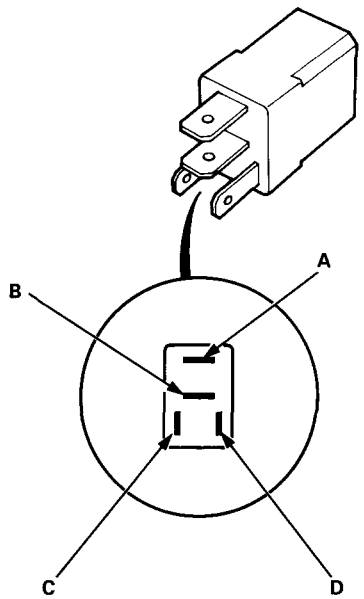

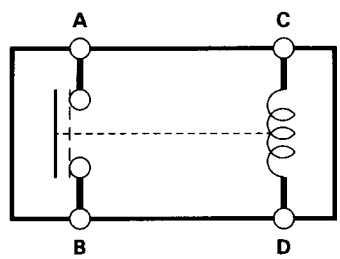

Power Antenna Motor Test

1. Open the trunk lid, and remove the side trim panel.

2. Disconnect the 4P connector from the motor, and check power to the motor at the connector terminals:
   - There should be battery voltage between the WHT/BLU (+) and BLK (-) terminals all the time.
   - There should be battery voltage between the PNK/WHT (+) and BLK (-) terminals only with the ignition and radio switched ON.

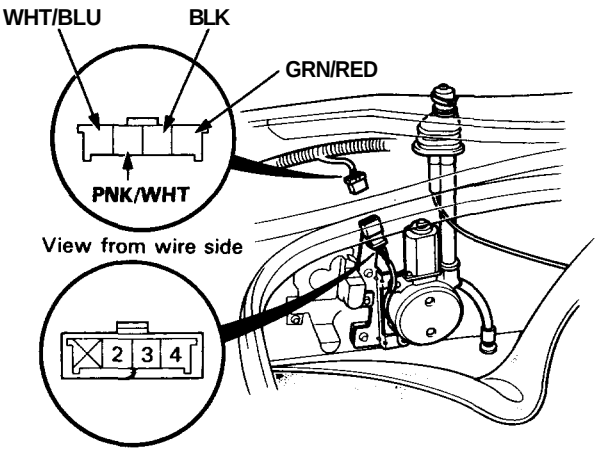

View from wire side

3. Test motor operation:

   FULL EXTEND: Connect battery power to the No. 3 and No. 4 terminals and ground to the No. 2 terminal.

   RETRACT: Disconnect power from the No. 3 terminal.

4. If the motor fails to operate properly, replace it.

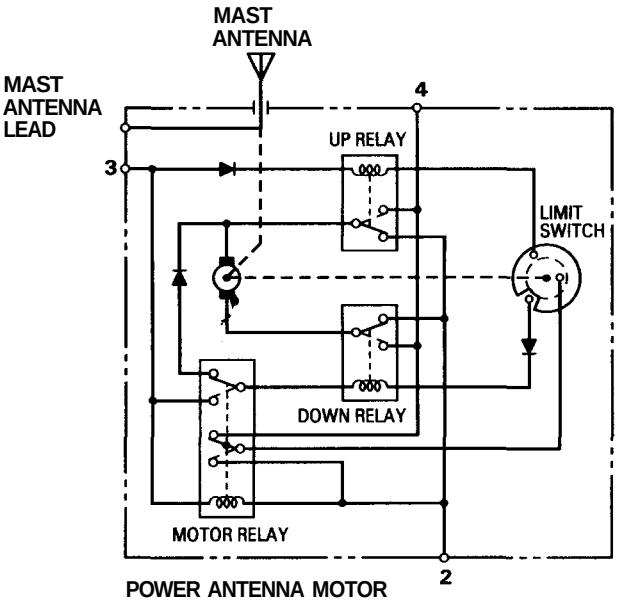

POWER ANTENNA MOTOR
(With the antenna retracted fully)

Power Antenna Motor Replacement

1. Open the trunk lid, and remove the side trim panel.

2. Disconnect the 4P connector and antenna lead from the motor, then remove the antenna nut and three mounting bolts, and take out the motor with the antenna mast.

   NOTE: Check the O-ring for deformation and damage. If necessary, replace it to prevent a leak.

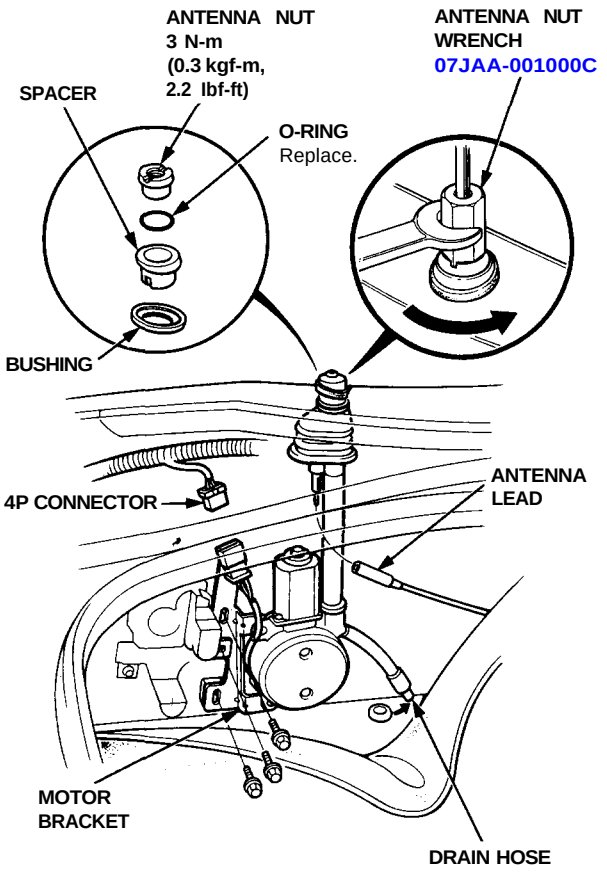

3. Install in the reverse order of removal.

   NOTE: Tighten the antenna nut, then tighten the three motor bracket mounting bolts.

Antenna Mast Replacement

Removal:

NOTE: The antenna mast alone can be replaced without removing the power antenna motor.

1. Remove the antenna nut, O-ring, spacer, and bushing.
2. Carefully withdraw the antenna mast while extending it by turning the radio switch ON.

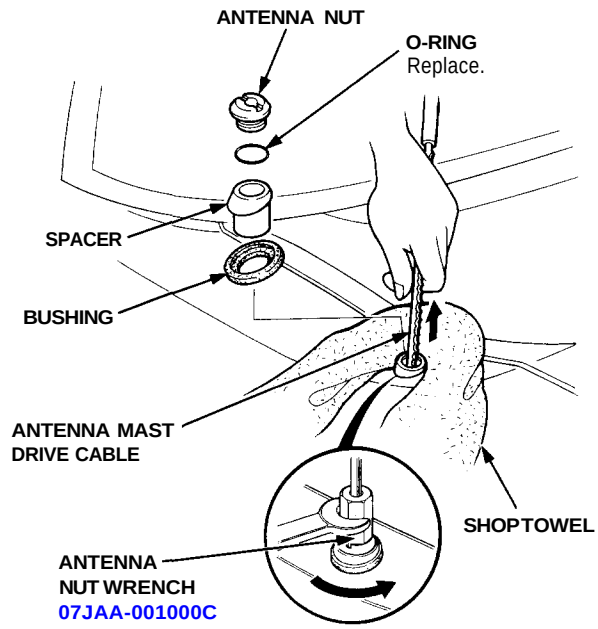

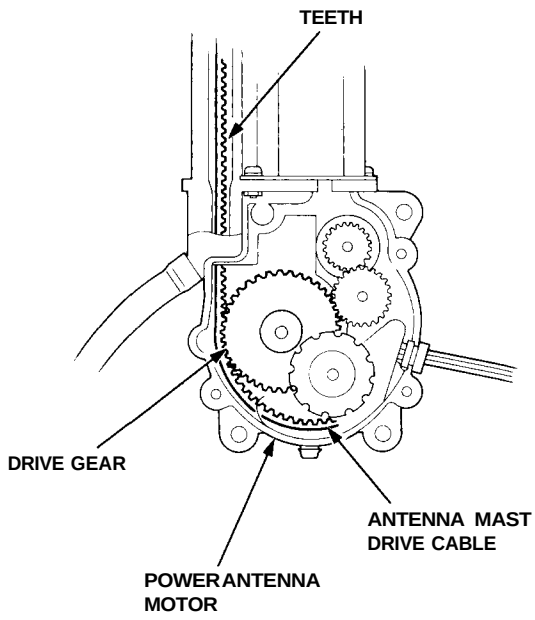

Installation:

1. Hold the antenna mast drive cable so its teeth point in the direction shown, and carefully insert the drive cable into the antenna housing.

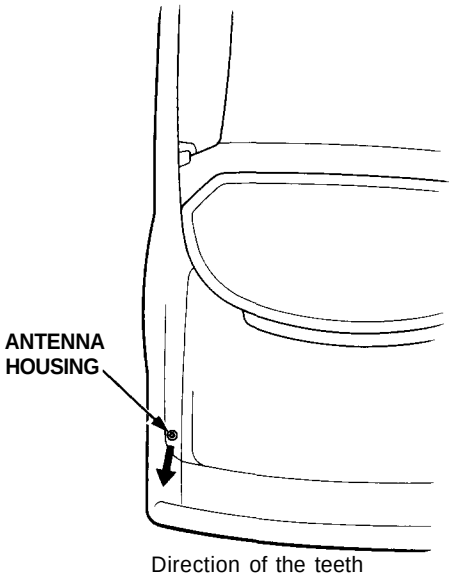

2. Check for engagement of the cable teeth to the drive gear by carefully moving the cable up and down.

3. Clean the threads on the antenna mast housing threads.

4. Turn the radio switch "OFF", and let the motor pull the drive cable inside the antenna housing.

5. Install the parts shown below.

CAUTION: Do not overtighten the antenna nut; the rear fender will be deformed.

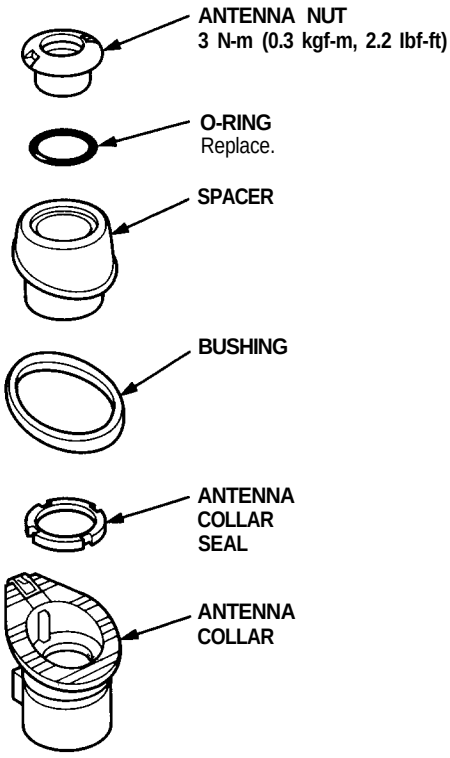

6. Check that the antenna mast extends and retracts fully when the radio switch is turned ON and OFF repeatedly.

Antenna Tube Replacement

1. Remove the antenna mast (see page 23-244).
2. Remove the power antenna motor (see page 23-244).
3. Remove the retaining screw, and pull the antenna tube out of its socket in the drive housing.

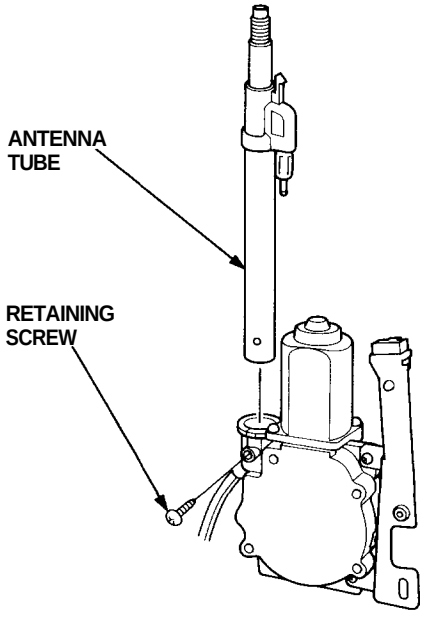

4. Remove the plastic guide and plastic insulator tube, and install them in the new antenna tube.

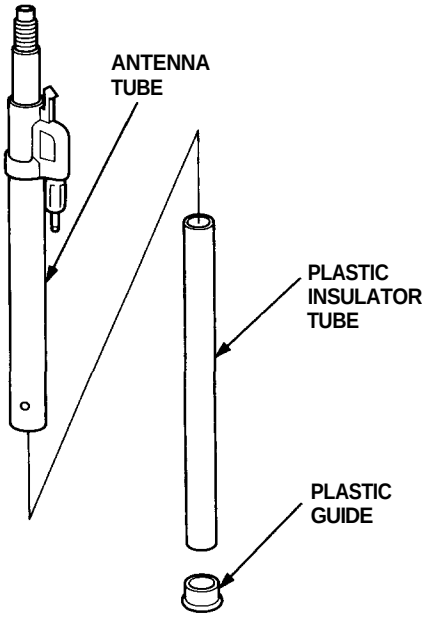

5. Insert the new antenna tube.

With an alignment mark:

— Insert the new antenna tube in its socket, and align the mark on the tube with the screw used to retain it.

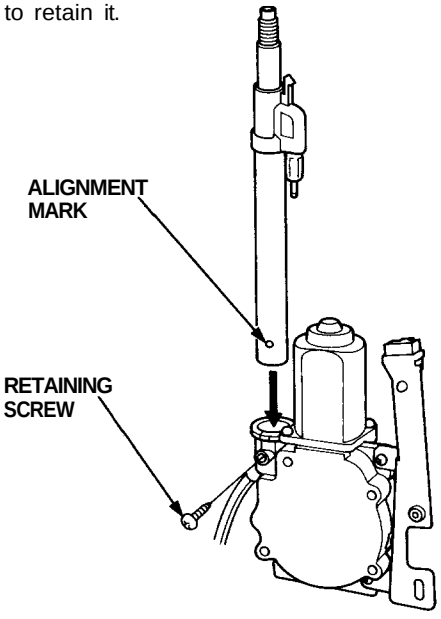

Without an alignment mark:

— Insert only the tube, and install the tube/motor assembly in the car.
— Adjust the tube so that the collar fits properly against the body, and mark the tube and motor.
— Remove the tube/motor assembly again.
— Align the mark on the tube with the mark on the motor, and tighten the clamping screw.

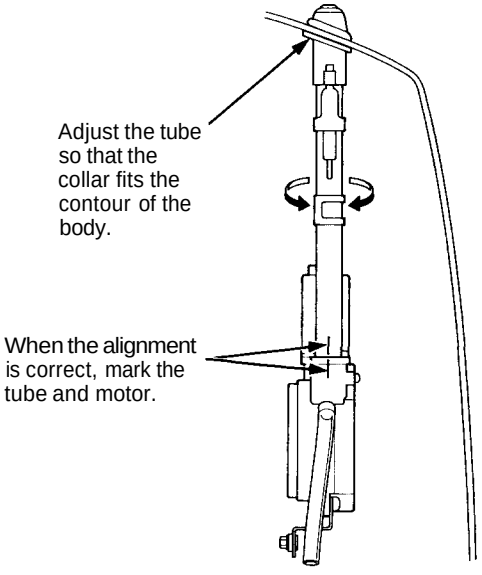

6. Install the power antenna motor (see page 23-244).
7. Insert the mast into the tube (see page 23-244).

Front/Rear Speaker Replacement

Front speaker:

1. Remove the door panel (see section 20).
2. Remove the door speaker assembly from the door panel by removing the five screws.

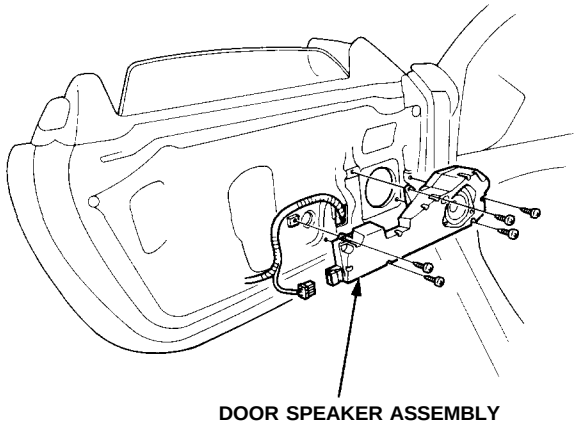

Rear speaker:

1. Remove the speaker grille.
2. Remove the four screws, then disconnect the 2P connector from the speaker.

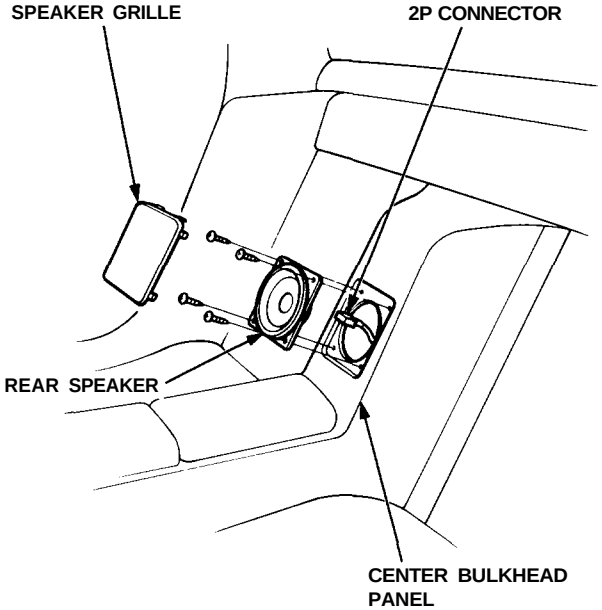

Foot Well Bass Speaker Replacement

1. Pull back the carpet on the passenger's side.
2. Remove the foot well bass speaker cover.

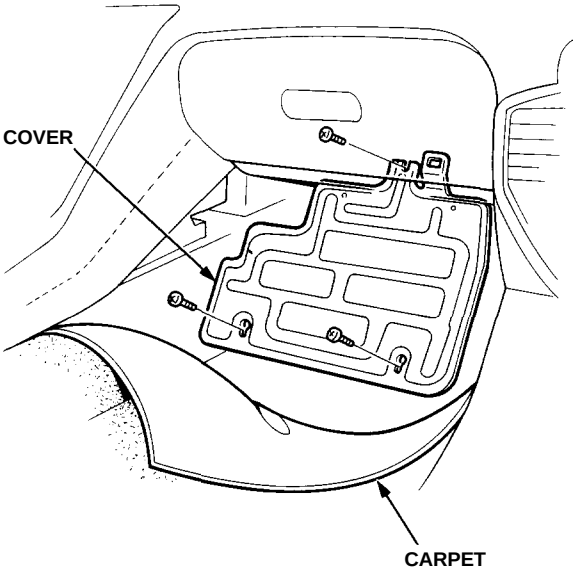

3. Disconnect the 2P and 6P connectors, then remove the two bolts, and remove the foot well bass speaker assembly.

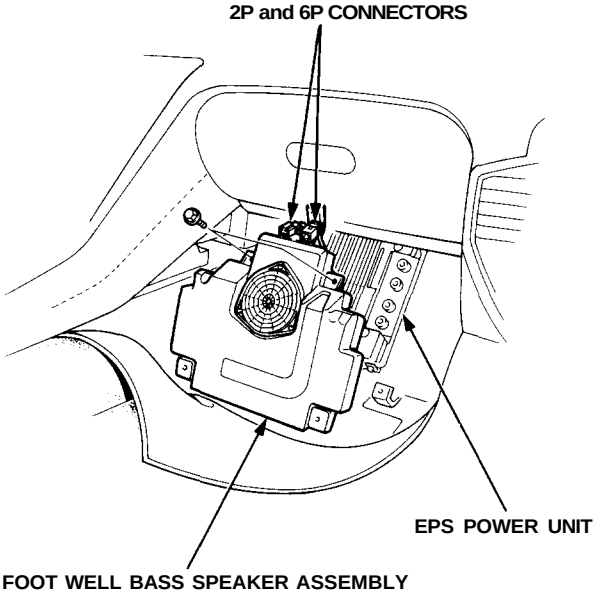

Horns

Component Location Index

SRS components are located in this area. Review the SRS component locations, precautions, and procedures in the SRS section 24 before performing repairs or service.

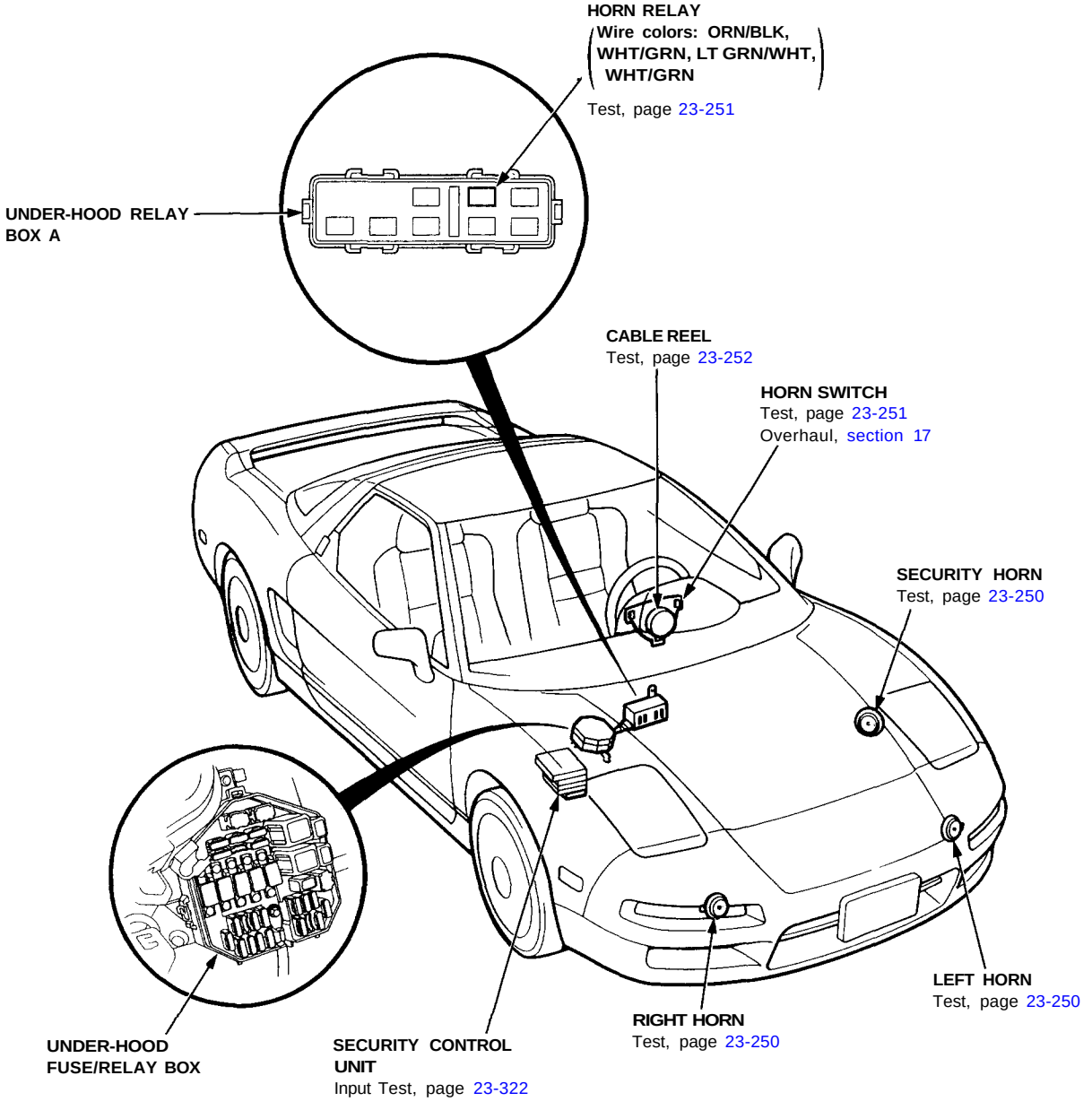

Description

Security Alarm System:
The security alarm system is an anti-theft alarm system. If someone tries to open the trunk, hood or either door without the ignition key, or if the roof is not fully latched, the security control unit senses a signal from the sensors and activates relays to flash the headlights and sound the horn for about two minutes.

Horns

Horn Test

1. Disconnect the 2P connector from the horn.
2. Remove the right and left horns.

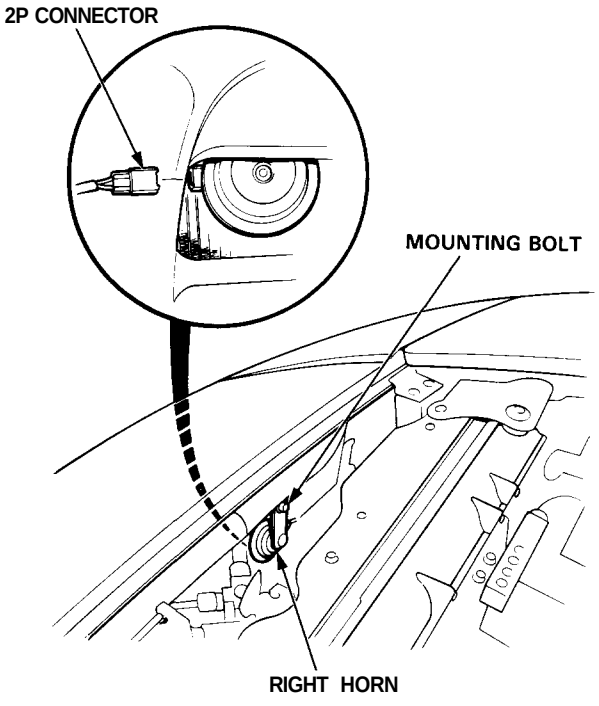

Security Horn:

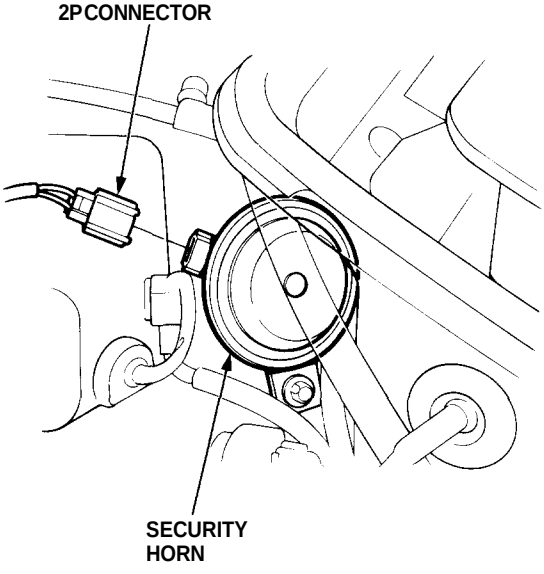

3. Test the horn by connecting power to the A or B terminals and ground to the other. The horn should sound.

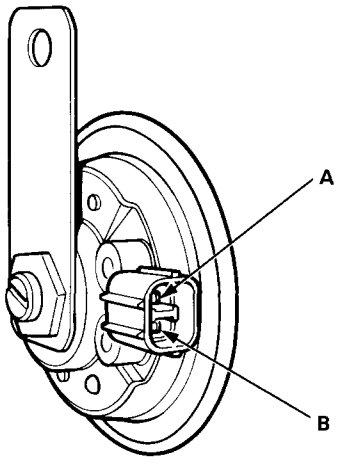

4. If the horn fails to sound, replace it.

Relay Test

1. Open the hood, and remove the horn relay from under-hood relay box A.

2. Check continuity at the relay terminals.

   - There should be continuity between the C and D terminals.
   - There should be continuity between the A and B terminals when power and ground are connected to the C and D terminals.
   - There should be no continuity between the A and B terminals when power is disconnected.

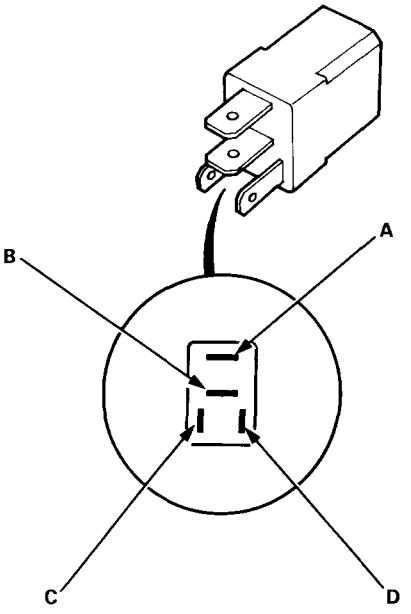

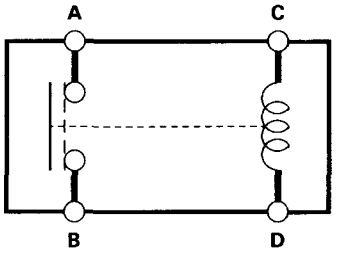

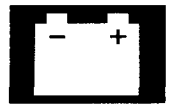

Switch Test

SRS components are located in this area. Review the SRS component locations, precautions, and procedures in the SRS section 24 before performing repairs or service.

1. Disconnect the battery negative cable, then disconnect the positive cable.
2. Make sure the wheels are turned straight ahead.
3. Remove the dashboard lower cover.
4. Install the short connectors on the airbag and seatbelt tensioner connectors (see section 24).

(cont'd)

Switch Test (cont'd)

5. Disconnect the cable reel harness 6P connector from the SRS main harness, then connect test harness C only to the cable reel harness.

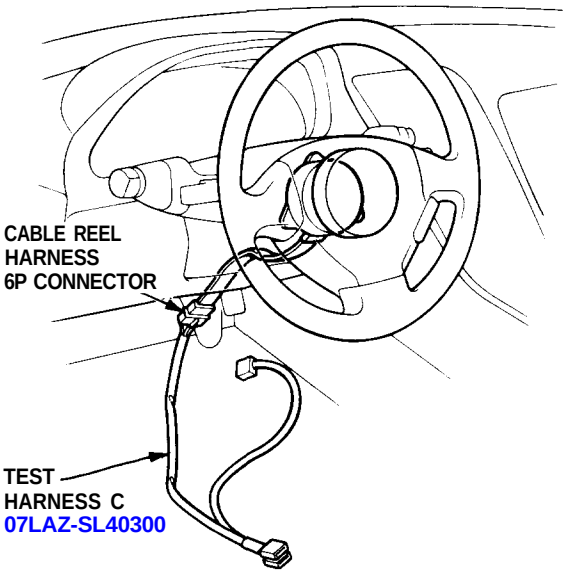

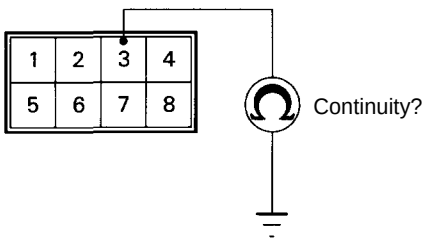

6. Check for continuity between the No. 3 terminal and body ground with the horn switch pressed. There should be continuity.

- If there is continuity, the horn switch is OK.
- If there is no continuity, go to step 7.

7. Remove the Torx bolts using a Torx T30 bit, then remove the airbag assembly.

⚠WARNING Store a removed airbag assembly with the pad surface up. If the airbag is improperly stored face down, accidental deployment could propel the unit with enough force to cause serious injury.

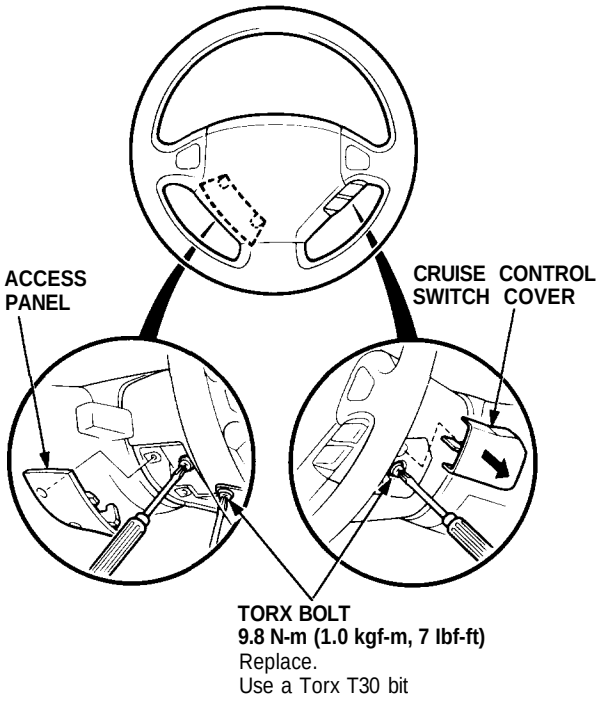

8. Check for continuity between the horn positive terminal and the steering column shaft with the horn switch pressed. There should be no continuity.

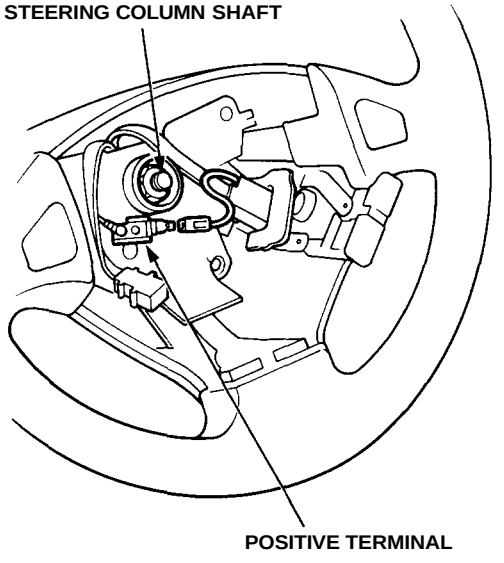

- If there is continuity, replace the cable reel (see section 24).
- If there is no continuity, go to step 9.

9. Remove the nut and the four screws, then remove the steering wheel cover, and replace the horn switch.

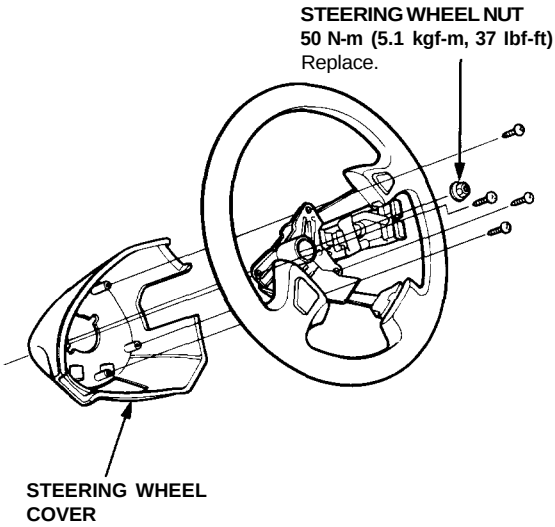

10. Reinstall the steering wheel and the airbag (see section 24).

Trunk Opener

- Component Location Index

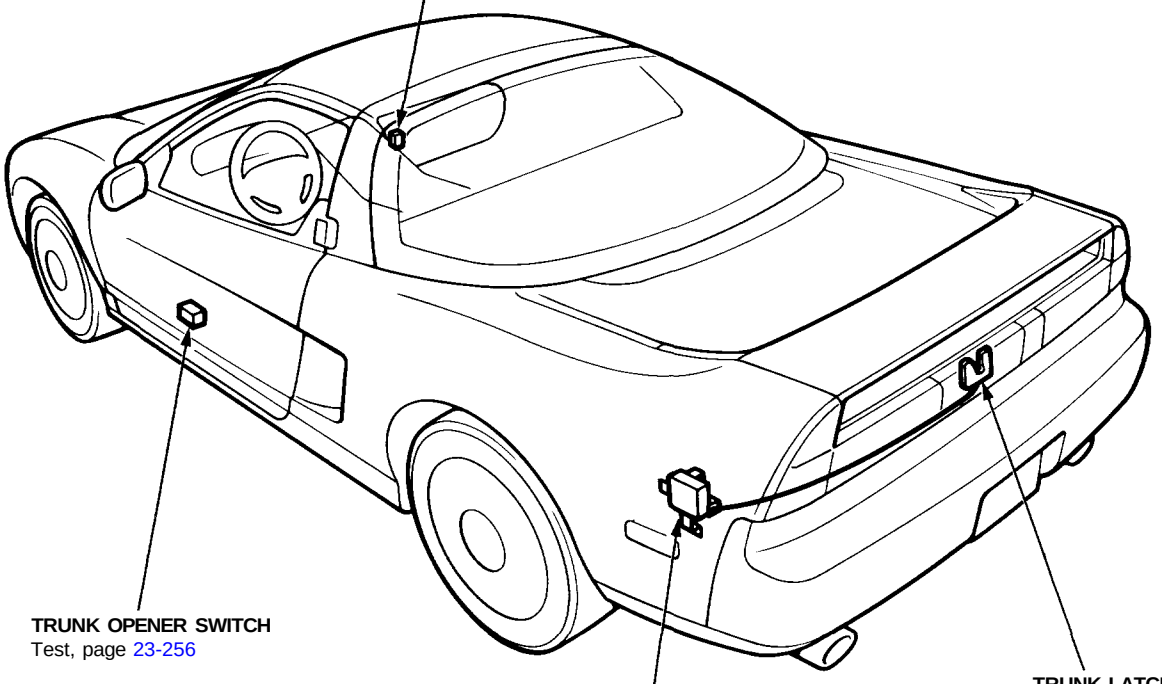

TRUNK OPENER MAIN SWITCH
Test, page 23-255

TRUNK OPENER SWITCH
Test, page 23-256

TRUNK LATCH

TRUNK OPENER SOLENOID
Test/Replacement, page 23-256

Main Switch Test

1. Remove the glove box, and disconnect the 2P connector from the switch.
2. Check for continuity between the terminals.
   - There should be continuity between the No. 1 terminal and No. 2 terminal with the main switch ON.
   - There should be no continuity with the main switch OFF.

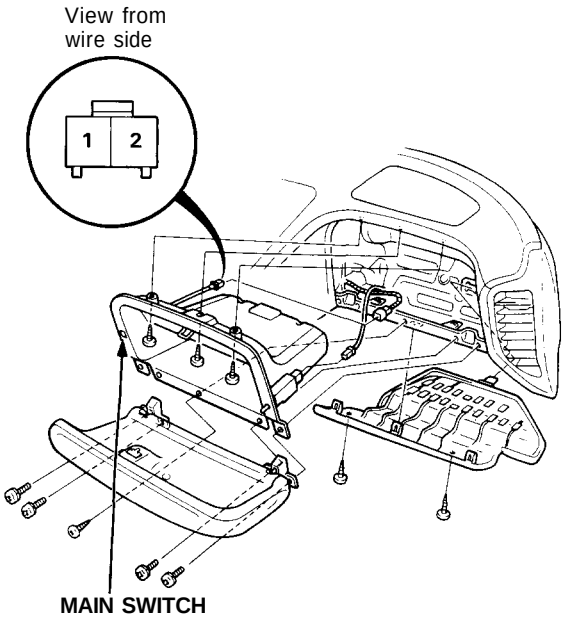

3. If necessary, replace the switch.

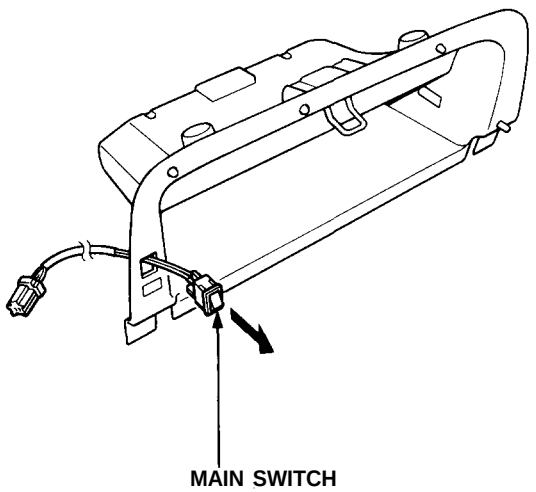

Trunk Opener

Opener Switch Test

1. Remove the driver's door panel, then push the switch out of the door panel as shown.

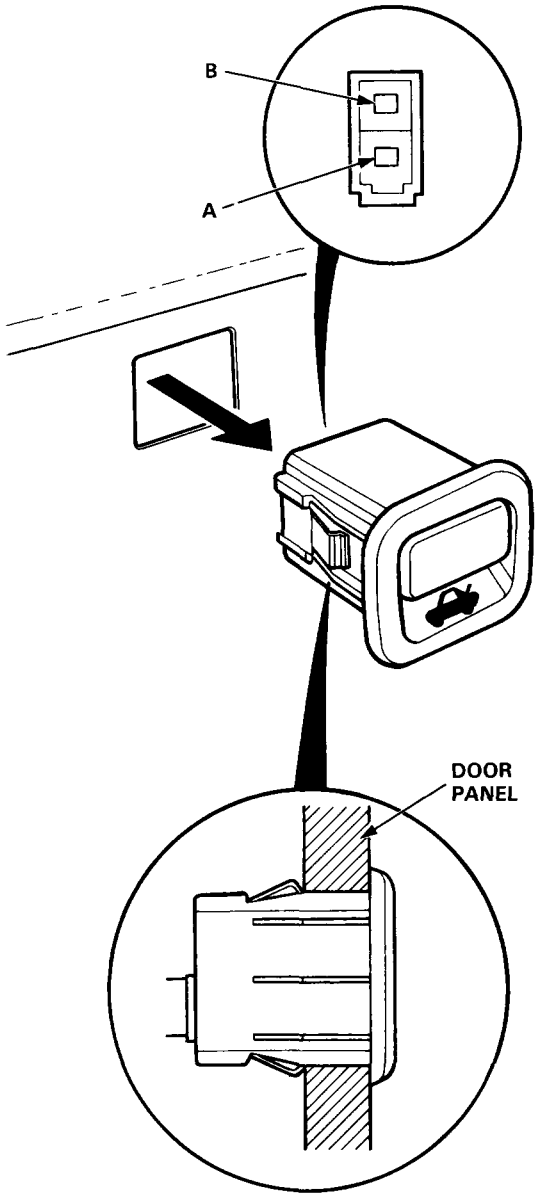

2. Check for continuity between the terminals.
   - There should be continuity between the A and B terminals when the switch is pushed.
   - There should be no continuity when the switch is released.

Solenoid Test/Replacement

1. Open the trunk lid, and remove the trunk side trim panel.
2. Disconnect the 2P connector from the solenoid assembly, and test solenoid operation by connecting battery power and ground to the A and B terminals momentarily.

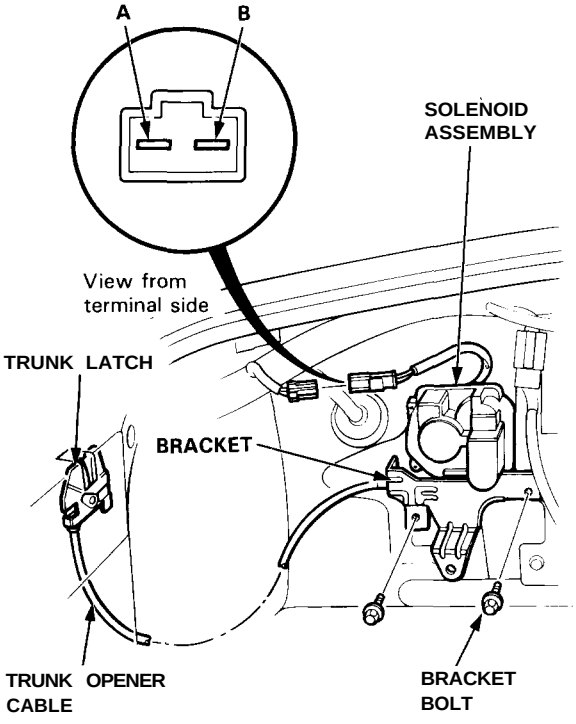

3. To remove the solenoid, remove the two bolts, then disconnect the trunk opener cable from the solenoid assembly.

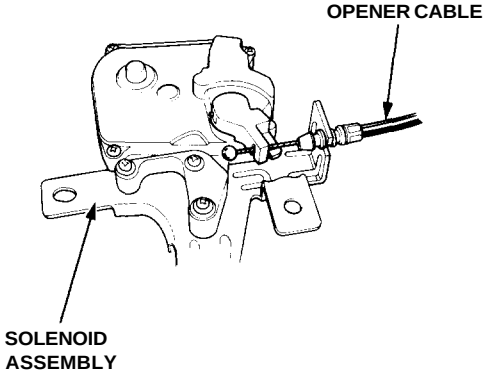

4. Install in the reverse order of removal.

Power Mirrors

- Component Location Index

• MIRROR ACTUATOR
Replacement, page 23-262

RIGHT MIRROR
Test, page 23-261
Replacement, page 23-261

LEFT MIRROR
Test, page 23-261
Replacement, page 23-261

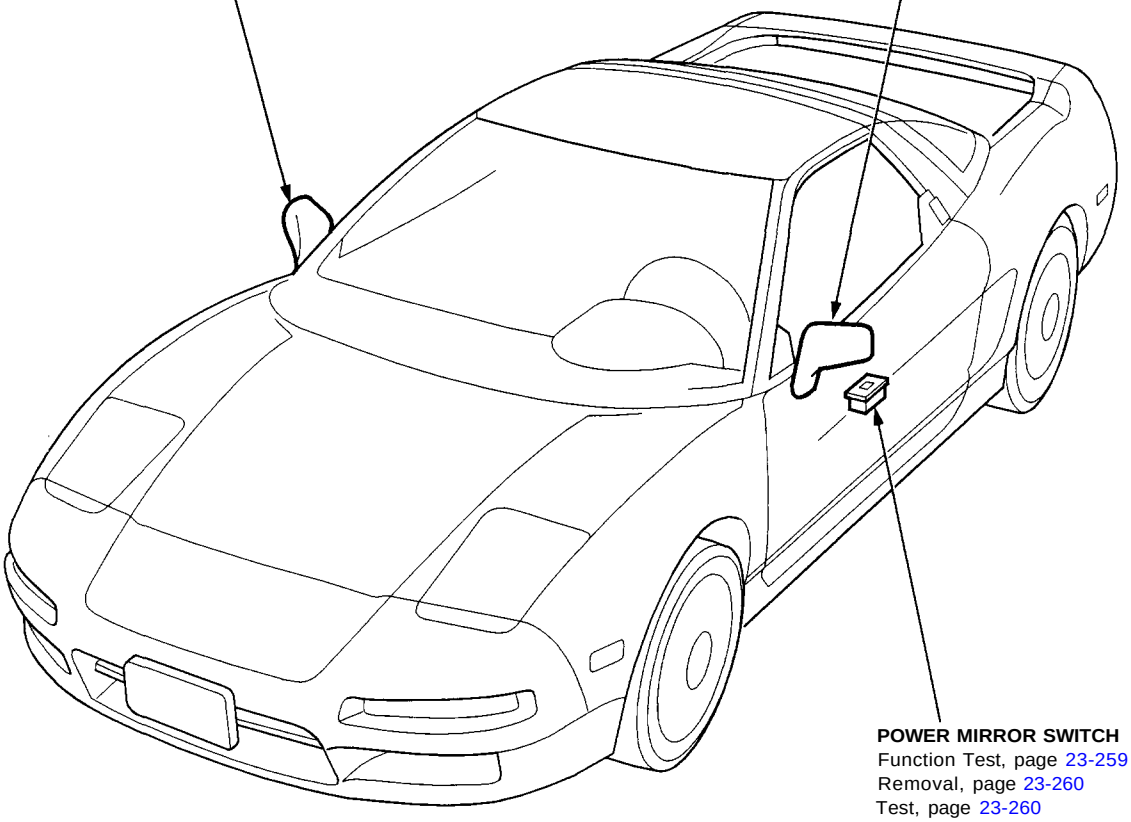

POWER MIRROR SWITCH
Function Test, page 23-259
Removal, page 23-260
Test, page 23-260

Function Test

NOTE: Before testing, remove the left door panel, then disconnect all connectors from the door panel.

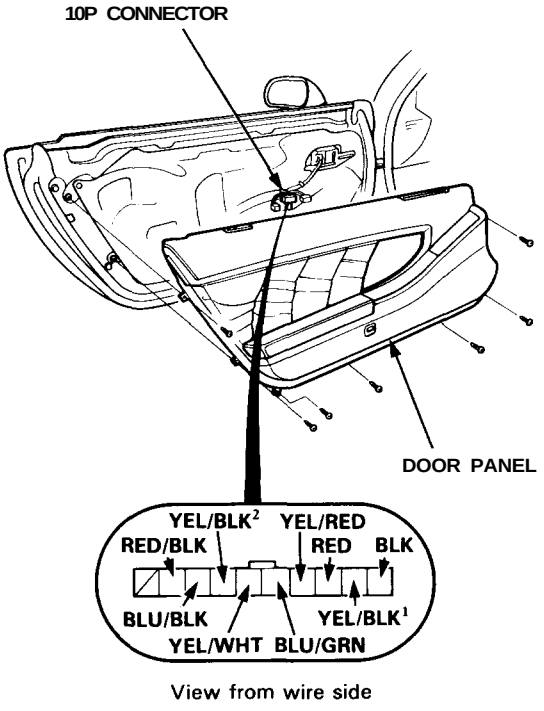

View from wire side

NOTE: Check the No. 4 (15A) fuse in the under-dash fuse box before testing.

One or both inoperative:

1. Check for voltage between the YEL/BLK[1] terminal and body ground with the ignition switch ON (II). There should be battery voltage.
   - If there is no voltage, check for an open in the YEL/BLK[1] wire.
   - If there is battery voltage, go to step *2.*
2. Check for continuity between the BLK terminal and body ground.
   There should be continuity. If there is no continuity, check for:
   - An open in the BLK wire.
   - Poor ground (G401, G402, G403).

Left inoperative:

Connect the YEL/BLK[1] terminal to the YEL/RED terminal and the YEL/WHT (or YEL/BLK[2]) terminal to body ground with jumper wires.
The left mirror should tilt down (or swing left) when the ignition switch is turned ON (II).

- If the mirror does not tilt down (or does not swing left), check for an open in the YEL/WHT (or YEL/BLK[2]) wire between the left door mirror and the switch.
  If the wire is OK, check the mirror.
- If the mirror doesn't move in either direction, repair the YEL/RED wire.
- If the mirror operates properly, check the mirror switch.

Right inoperative:

Connect the YEL/BLK[1] terminal to the BLU/GRN terminal and the YEL/WHT (or BLU/BLK) terminal to the body ground with jumper wires.
The right mirror should tilt down (or swing left) when the ignition switch is turned ON (II).

- If the mirror does not tilt down (or does not swing left), remove the right door panel, and check for an open in the YEL/WHT or BLU/BLK) wire between the right door mirror and the switch.
  If the wire is OK, check the right door mirror.
- If the mirror doesn't move in either direction, repair the BLU/GRN wire.
- If the mirror operates properly, check the mirror switch.

Power Mirrors

Switch Removal

1. Remove the left door panel, then disconnect all connectors from the door panel (see section 20).
2. Remove the three screws, then remove the mirror switch from the armrest.

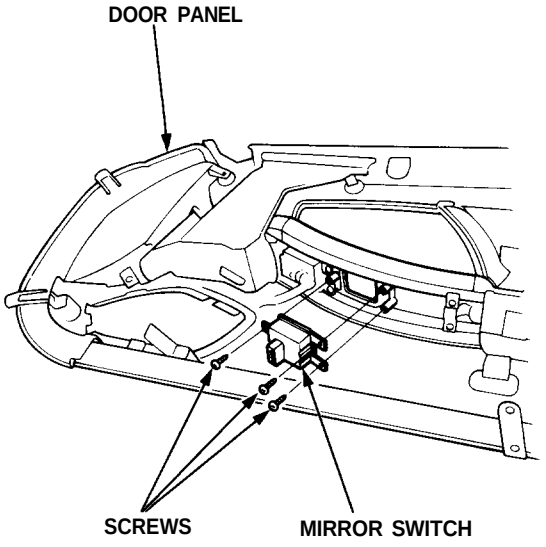

Switch Test

1. Remove the power mirror switch from the armrest.
2. Check for continuity between the terminals in each switch position according to the table.

Mirror Switch

Position		3	4	5	6	7	9	10	2		8
RIGHT	OFF	○		○	○			○			
	UP			○			○				
		○			○			○			
	DOWN			○			○				
	LEFT	○		○	○		○				
	RIGHT										
LEFT	OFF		○	○		○		○	○	○	○
	UP		○	○		○					
	DOWN		○			○	○				
	LEFT			○		○	○				
	RIGHT		○			○					

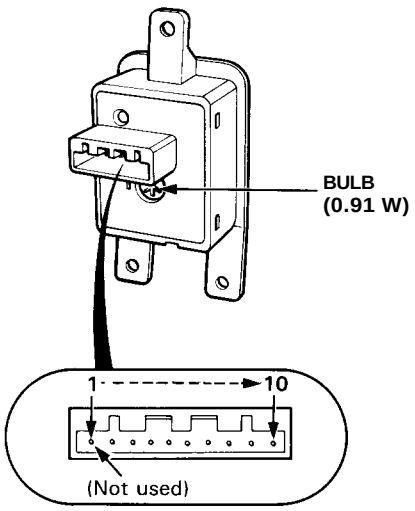

Door Mirror Test

1. Remove the door panel, and carefully remove the plastic cover (see section 20).
2. Disconnect the power mirror 3P connector.
3. Test actuator operation:
   TILT UP: Connect battery power to the No. 3 terminal and ground to the No. 2 terminal.
   TILT DOWN: Connect battery power to the No. 2 terminal and ground to the No. 3 terminal.
   SWING LEFT: Connect battery power to the No. 2 terminal and ground to the No. 1 terminal.
   SWING RIGHT: Connect battery power to the No. 1 terminal and ground to the No. 2 terminal.
4. If the mirror fails to operate properly, replace it.

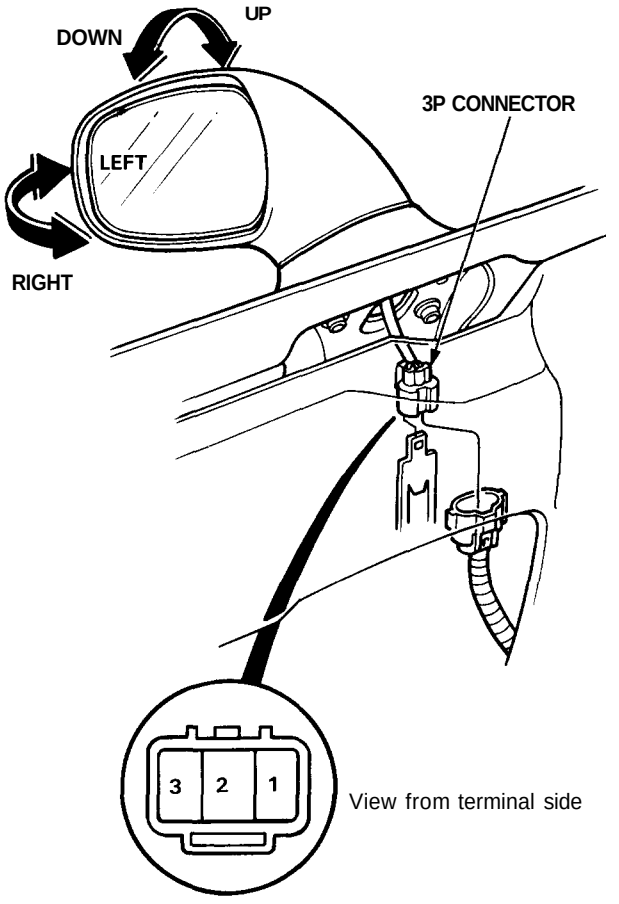

Door Mirror Replacement

1. Remove the door panel, and carefully remove the plastic cover (see section 20).
2. Disconnect the 3P connector.

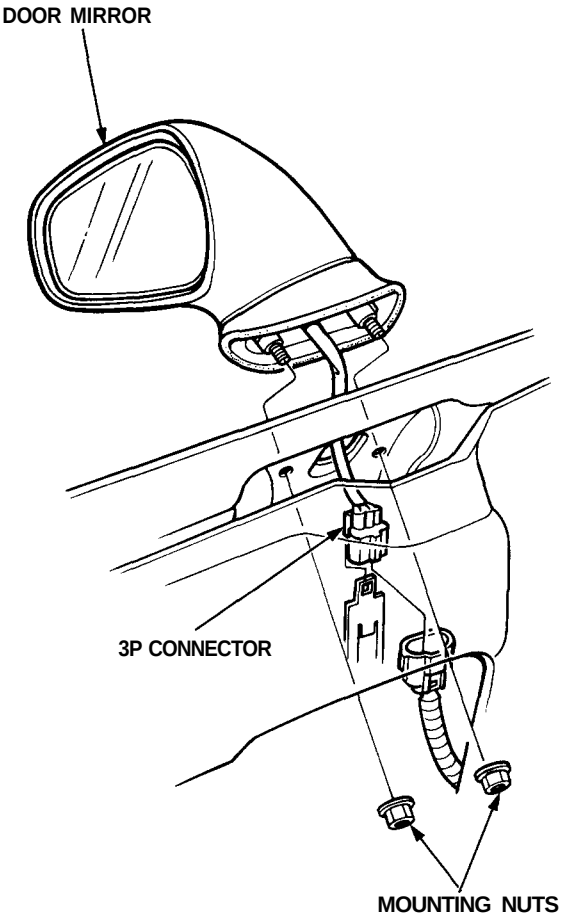

3. Remove the two mounting nuts while holding the mirror.
4. Install in the reverse order of removal.

Door Mirror Actuator Replacement

1. Remove the mirror and actuator assembly from the housing (see section 20).

2. Place the mirror on a flat, padded surface. Pull up on the spring-loaded lug, and remove the roll pin.

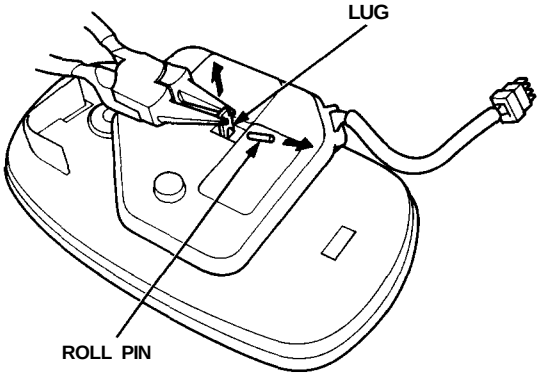

3. Pull the actuator away from the mirror. If the actuator shafts do not come off with the actuator, pry them out of their sockets.

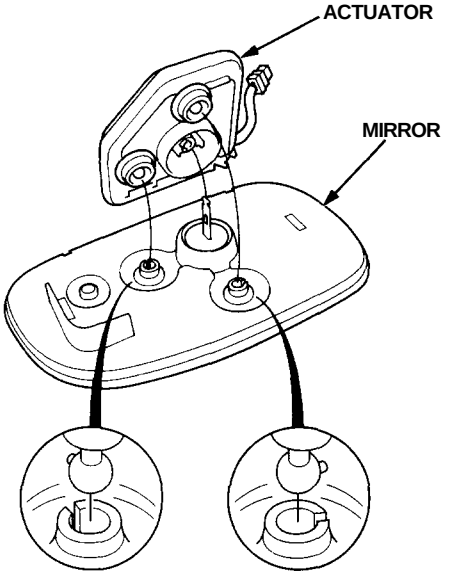

4. Discard the actuator and shafts.

5. Set the new actuator on the back of the mirror with the lug protruding through the middle. Pull up on the lug, and install the roll pin removed in step 3.

6. Press the actuator shafts into the sockets on the mirror.

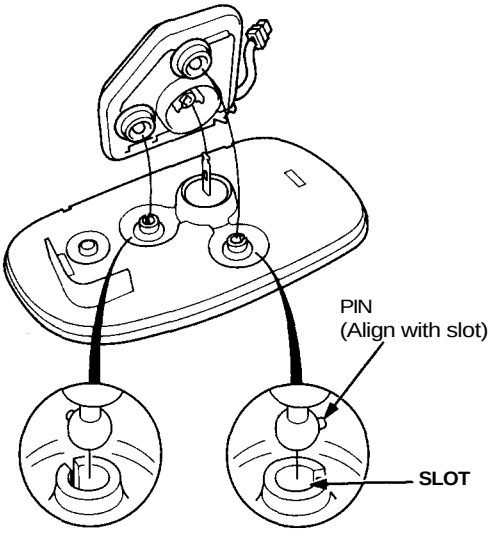

7. Install the mirror and actuator assembly in the housing (see section 20).

8. Test the mirror's operation.

Power Door Locks

Component Location Index

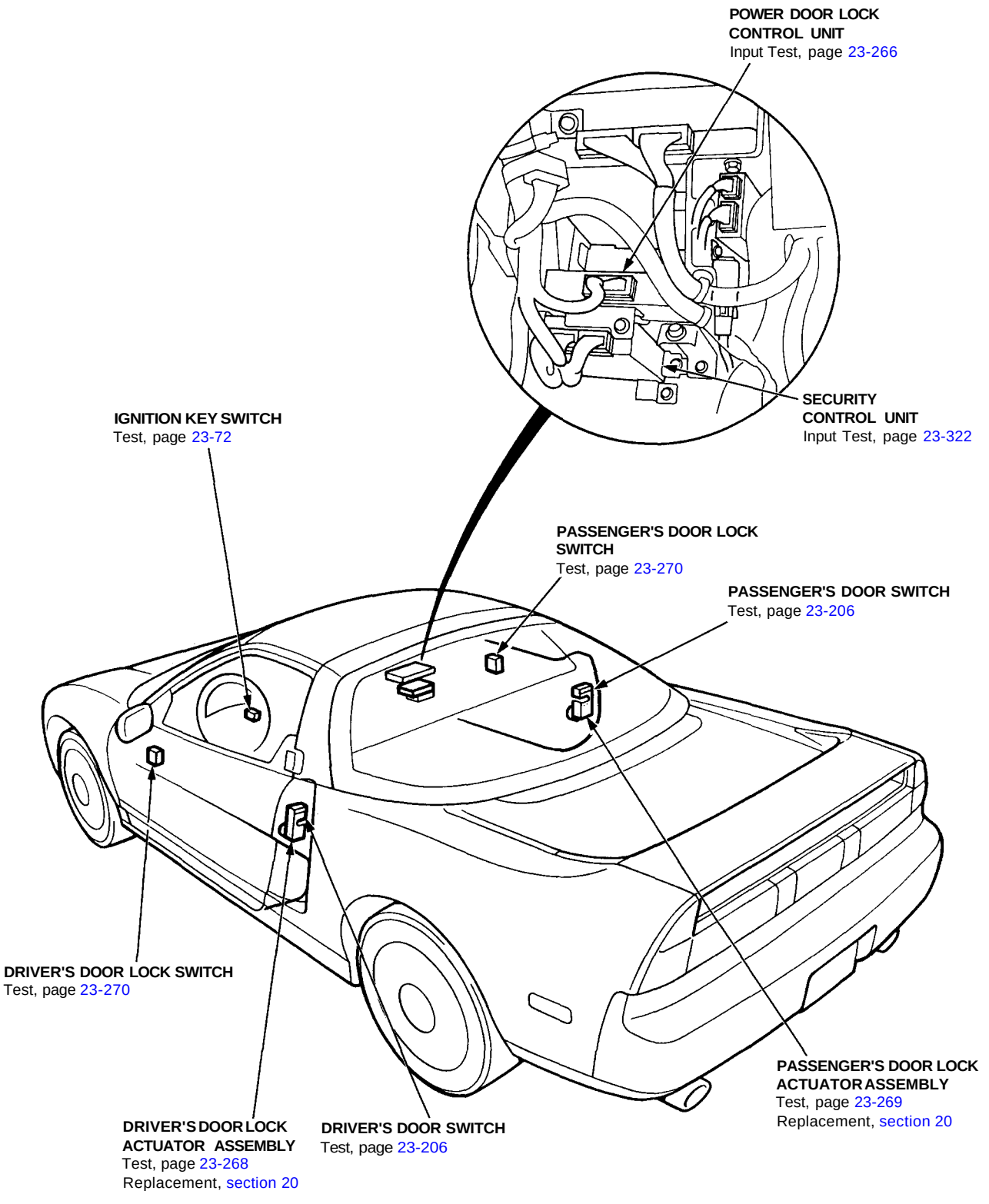

Troubleshooting

NOTE: The numbers in the table show the troubleshooting sequence.

Symptom \ Item to be inspected		Blown No. 35 (20 A) fuse (In the under-hood fuse/relay box)	Disconnected or obstructed door lock rod/linkage	Driver's door lock knob switch (In the left door lock actuator)	Ignition key switch	Driver's door switch	Passenger's door switch	Driver's door lock actuator	Passenger's door lock actuator	Driver's door lock switch	Passenger's door lock switch	Control unit input	Poor ground	Open circuit, loose or disconnected terminals
Power door lock system *doesn't operate at all.*		1										2	G401 G402 G403	ORN
Doors don't lock or unlock with the driver's door lock switch.	Both doors									1		2	G401 G402 G403	WHT/YEL or GRN/WHT[2]
	One door		1					2				3		WHT/RED or YEL/RED
Doors don't lock or unlock with the passenger's door lock switch.	Both doors										1	2	G401 G402 G403	BLK/RED or BLK/WHT
	One door		1					2				3		WHT/RED or YEL/RED
Doors don't lock or unlock with the driver's door lock knob.	Both doors			1								2	G401 G402 G403	BLU/WHT or BLU/RED[1]
	One door		1					2				3		WHT/RED or YEL/RED
Doors will lock when the key is still in the ignition switch and driver's door is open.					1	2	3					4	G401 G402 G403	GRN/RED, BLU/GRN or GRN/BLU

Control Unit Input Test

Remove the glove box, then disconnect the 18P connector from the control unit.

Inspect the connector terminals to be sure they are all making good contact.

- If the terminals are bent, loose, or corroded, repair them as necessary, and recheck the system.
- If the terminals look OK, make the following input tests at the connector.
  — If any test indicates a problem, find and correct the cause, then recheck the system.
  — If all the input tests prove OK, the control unit must be faulty; replace it.

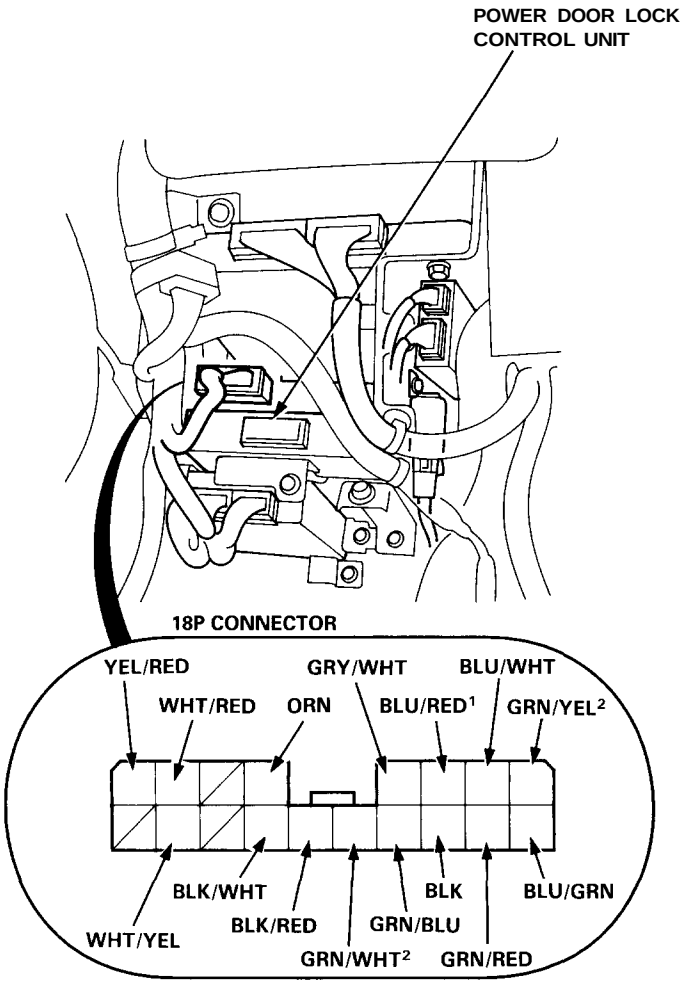

View from wire side

Wire	Test condition	Test: Desired result	Possible cause if result is not obtained
BLK	Under all conditions	Check for continuity to ground: There should be continuity.	• Poor ground (G401, G402, G403) • An open in the wire
ORN	Under all conditions	Check for voltage to ground: There should be battery voltage.	• Blown No. 35 (20 A) fuse • An open in the wire
GRN/WHT[2]	Driver's door lock switch in LOCK	Check for voltage to ground: There should be 1 V or less.	• Faulty driver's door lock switch • Poor ground (G401, G402, G403) • An open in the wire
WHT/YEL	Driver's door lock switch in UNLOCK		
BLK/WHT	Passenger's door lock switch in LOCK	Check for voltage to ground: There should be 1 V or less.	• Faulty passenger's door lock switch • Poor ground (G401, G402, G403) • An open in the wire
BLK/RED	Passenger's door lock switch in UNLOCK		
BLU/WHT	Driver's door lock knob in LOCK	Check for voltage to ground: There should be 1 V or less.	• Faulty driver's door lock actuator • Poor ground (G401, G402, G403) • An open in the wire
BLU/RED[1]	Driver's door lock knob in UNLOCK		
GRY/WHT	Passenger's door lock key cylinder switch in LOCK	Check for voltage to ground: There should be 1 V or less.	• Faulty passenger's door lock actuator • Poor ground (G401, G402, G403) • An open in the wire
GRN/YEL[2]	Passenger's door lock key cylinder switch in UNLOCK		
GRN/BLU	Driver's door open	Check for voltage to ground: There should be 1 V or less.	• Faulty door switch • Poor ground (G401, G402, G403) • An open in the wire
GRN/RED	Passenger's door open		
BLU/GRN	Ignition key is inserted into the ignition switch.	Check for voltage to ground: There should be 1 V or less.	• Faulty ignition key switch • Poor ground (G401, G402, G403) • An open in the wire
WHT/RED and YEL/RED	Connect the ORN terminal to the WHT/RED terminal, and the YEL/RED terminal to the BLK terminal momentarily.	Check door lock operation: Both doors should lock as power and ground are connected momentarily.	• Faulty actuator • An open in the wire
	Connect the ORN terminal to the YEL/RED terminal, and the WHT/RED terminal to the BLK terminal momentarily.	Check door lock operation: Both doors should unlock as power and ground are connected momentarily.	

CAUTION: To prevent damage to the motor, connect power and ground only momentarily.

Power Door Locks

Driver's Door Actuator Test

1. Remove the door panel (see section 20).
2. Disconnect the 8P connector from the actuator.

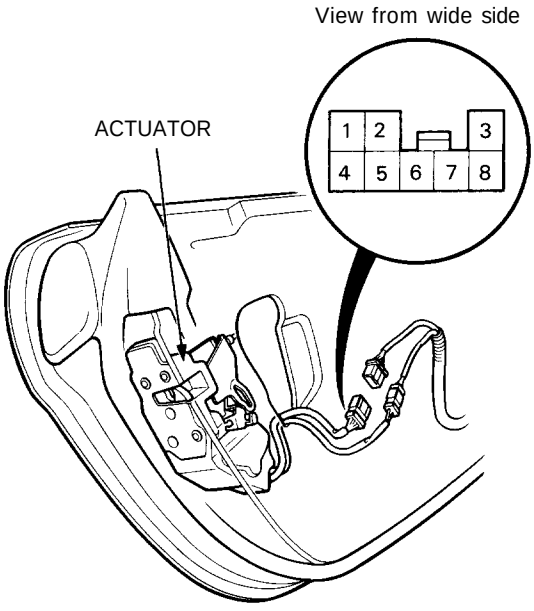

3. Test actuator operation:

   LOCK: With battery power connected to the No. 7 terminal, connect ground to the No. 8 terminal momentarily.

   UNLOCK: With battery power connected to the No. 8 terminal, connect ground to the No. 7 terminal momentarily.

   CAUTION: To prevent damage to the motor, connect power and ground only momentarily.

4. If the actuator fails to operate properly, replace it.

5. Check for continuity between the terminals in each switch position according to the table.

Key Cylinder Switch:

Terminal / Position	1	2	3
UNLOCK	○	○	
NEUTRAL			
LOCK		○	○

Door Lock Knob Switch:

Terminal / Position	4	5	6
LOCK	○		○
UNLOCK	○	○	

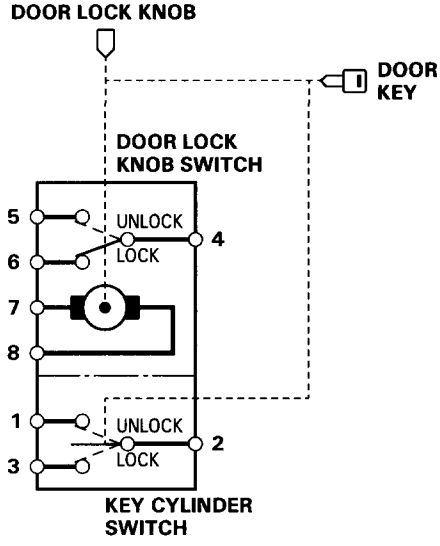

Passenger's Door Actuator Test

1. Remove the door panel (see section 20).
2. Disconnect the 8P connector from the actuator.

View from wide side

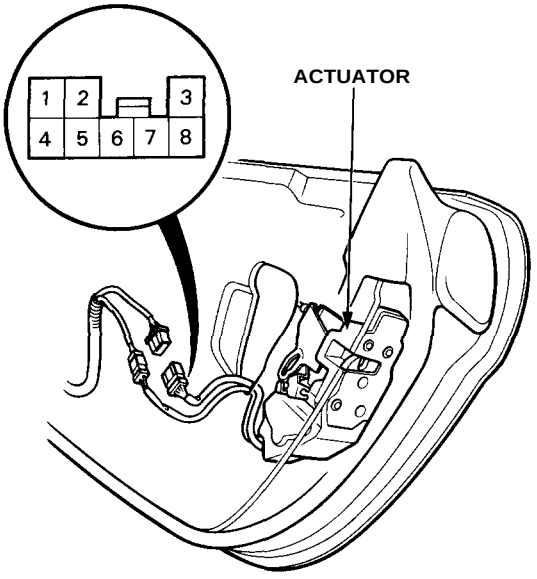

3. Test actuator operation:

   LOCK: With battery power connected to the No. 7 terminal, connect ground to the No. 8 terminal momentarily.

   UNLOCK: With battery power connected to the No. 8 terminal, connect ground to the No. 7 terminal momentarily.

   CAUTION: To prevent damage to the motor, connect power and ground only momentarily.

4. If the actuator fails to operate properly, replace it.

5. Check for continuity between the terminals in each switch position according to the table.

Key Cylinder Switch:

Terminal / Position	1	2	3
UNLOCK	○	○	
NEUTRAL			
LOCK		○	○

Door Lock Knob Switch:

Terminal / Position	4	5
LOCK		
UNLOCK	○	○

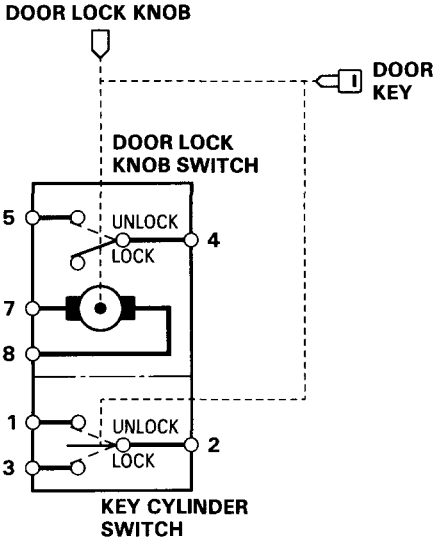

Power Door Locks

Door Lock Switch Test

1. Remove the door grip assembly.
2. Disconnect the 3P connector from the switch.
3. Check for continuity between the terminals, in each switch position, according to the table.

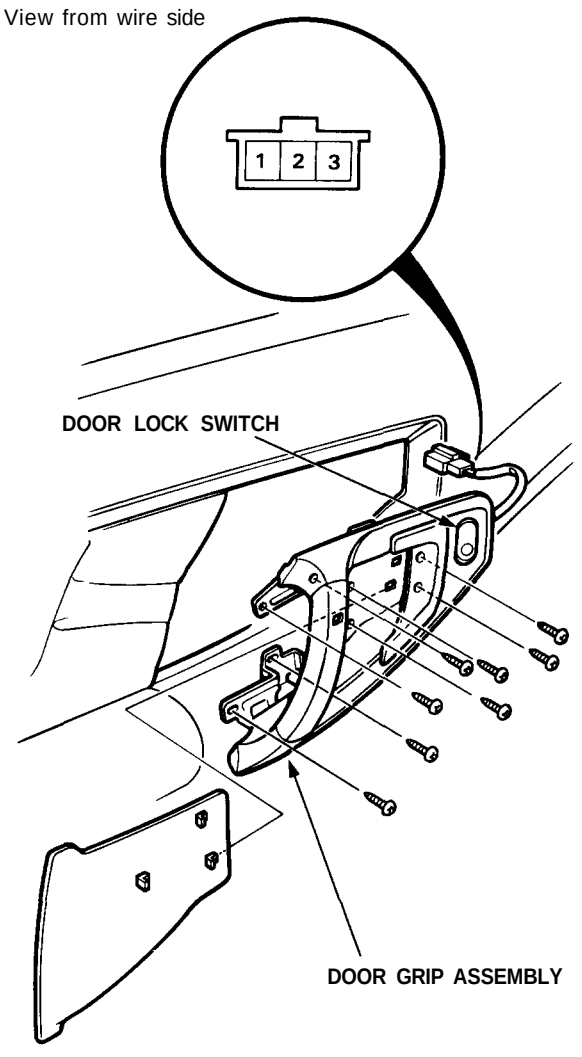

Terminal / Position	1	2	3
LOCK		○	○
OFF			
UNLOCK	○	○	

Power Windows

Component Location Index

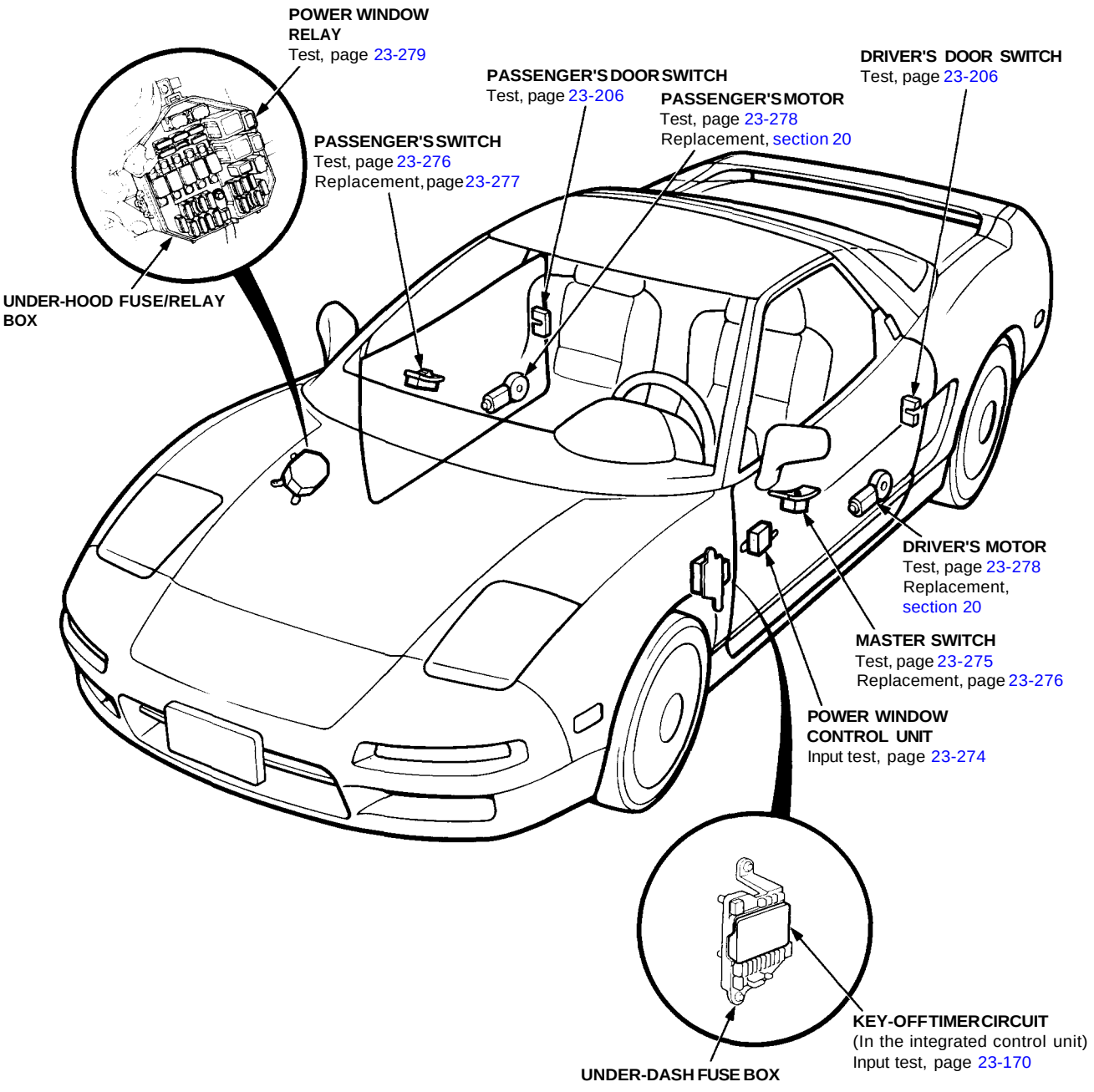

Description

Power Window Key-off Timer Operation:
The power windows can still be operated for about ten minutes after the ignition switch is turned from the ON (II) to the ACC (I) or LOCK (O) position as long as neither of the doors has been opened. This provides a convenience to parked occupants while offering a degree of security against unwanted or accidental window operation.

Troubleshooting

NOTE: The numbers in the table show the troubleshooting sequence.

Item to be inspected / Symptom	Blown No. 5 (15 A) fuse (In the under-dash fuse box)	In the under-hood fuse/relay box: Blown No. 34 (15 A) fuse	In the under-hood fuse/relay box: Blown No. 47 (20 A) fuse	In the under-hood fuse/relay box: Blown No. 50 (20 A) fuse	Power window relay	Control unit input	Master switch	Passenger's switch	Driver's motor	Pulser (In driver's motor)	Passenger's motor	Window regulator	Key-off timer circuit (In the integrated control unit)	Poor ground	Open circuit, loose or disconnected terminals
Both windows do not operate.	1	2			3								4	G401 G402 G403 G201	GRY/BLK
Driver's window does not operate in any position.				1		4	2		3			5		G401 G402 G403	WHT/YEL
Driver's window does not operate in AUTO.						3	1			2					RED/GRN or BLU
Passenger's window does not operate.			1				2	3			4	5		G401 G402 G403	BLU/BLK, BLU/YEL, BLU/GRN, BLU/RED or BLU/WHT
Both windows do not operate within the first ten minutes after the ignition switch has been turned OFF.	1	2				3							4	G401 G402 G403	WHT/BLU, GRN/RED or GRN/BLU

Power Windows

Control Unit Input Test

NOTE: The control unit only controls the driver's door window.

Remove the driver's door panel and disconnect the 4P and 6P connectors from the control unit.
Inspect the connector and socket terminals to be sure they are all making good contact.

- If the terminals are bent, loose, or corroded, repair them as necessary, and recheck the system.
- If the terminals look OK, make the following input tests at the connector.
  - — If any test indicates a problem, find and correct the cause, then recheck the system.
  - — If all the input tests prove OK, the control unit must be faulty; replace it.

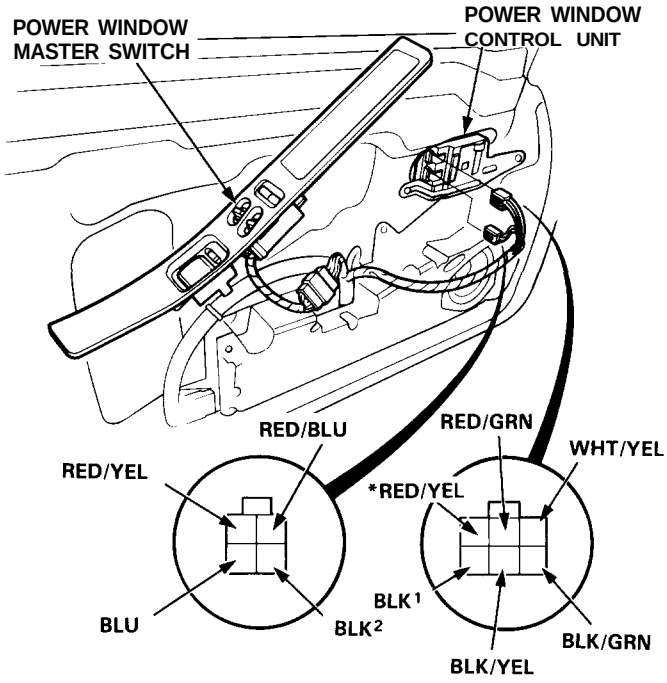

View from wire side

*Not used

Wire	Test condition	Test: Desired result	Possible cause if result is not obtained
BLK[1]	Under all conditions	Check for continuity to ground: There should be continuity.	• Poor ground (G401, G402, G403) • An open in the wire
WHT/YEL	Ignition switch ON (II)	Check for voltage to ground: There should be battery voltage.	• Blown No. 50 (20 A) fuse • Faulty power window relay • Faulty key-off timer system • Poor ground (G201) • An open in the wire
BLK/YEL	Ignition switch ON (II) and driver's switch UP	Check for voltage to ground: There should be battery voltage as the switch is pushed.	• Faulty driver's switch • An open in the wire
BLK/GRN	Ignition switch ON (II) and driver's switch DOWN		
RED/GRN	Ignition switch ON (II) and driver's switch DOWN (AUTO)		
BLU and BLK[2]	Connect the WHT/YEL terminal to the RED/BLU terminal, and the BLK[1] terminal to the RED/YEL terminal.	Check for voltage between the BLU (+) and BLK[2] (-) terminals with an analog voltmeter: It should indicate between 3-8 volts as the motor runs.	• Faulty pulser • Faulty driver's motor • An open in the wire

Master Switch Test

1. Remove the door panel (see section 20).
2. Disconnect the 12P connector.
3. Check for continuity between the terminals in each switch position according to the tables.

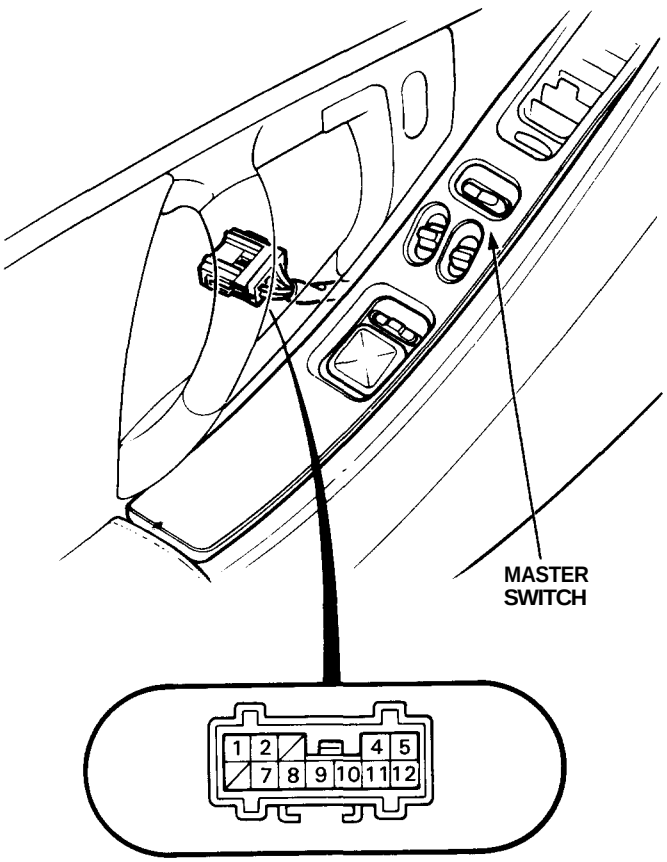

View from wire side

Driver's Switch

Position \ Terminal	2	5	1	12
UP	○	○		
OFF				
DOWN		○	○	
DOWN (AUTO)		○	○	○

Passenger's Switch

Position	Main Switch \ Terminal	4	11	9	10
UP	ON	○	○	○	○
	OFF	○	○		
OFF	ON		○	○	○
	OFF		○		○
DOWN	ON	○			○
			○	○	
	OFF	○			○

Switch Light

B		7
○	○	○

Power Windows

Passenger's Switch Test

1. Remove the door panel (see section 20).
2. Disconnect the 8P connector.

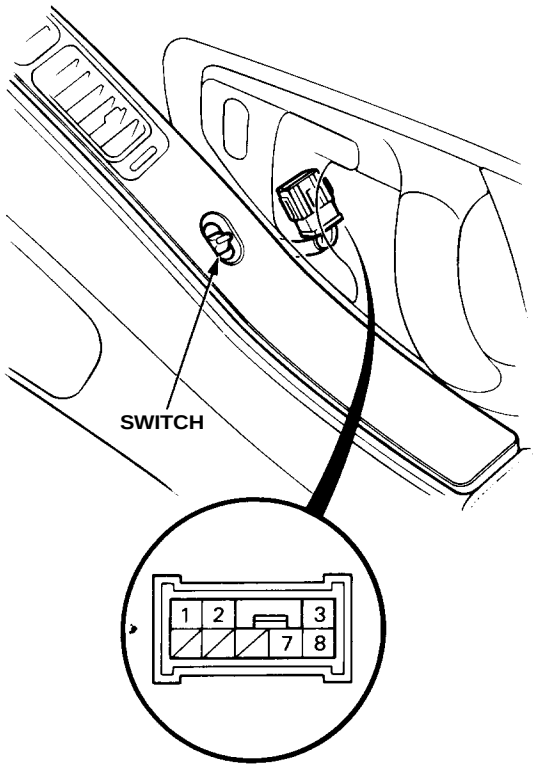

View from wire side

3. Check for continuity between the terminals in each switch position according to the table.

Terminal / Position	3	8	1	2	7
UP	○	○			
			○		○
OFF			○		○
		○		○	
DOWN	○				○
		○		○	

Master Switch Replacement

1. Remove the door panel (see section 20).
2. Remove the four screws, then remove the power window master switch from the door panel.

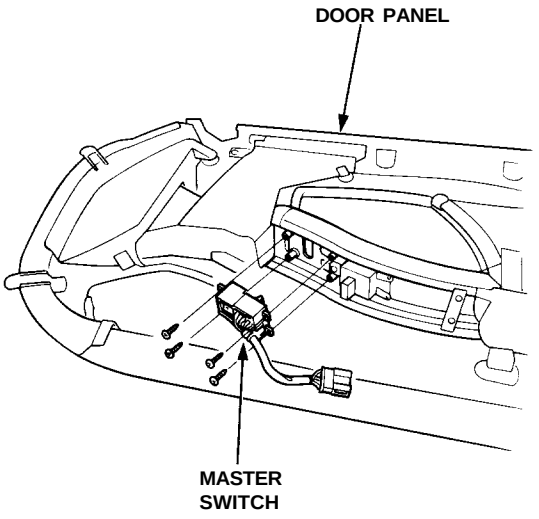

Passenger's Switch Replacement

1. Remove the door panel (see section 20).
2. Remove the two screws, then remove the passenger's switch from the door panel.

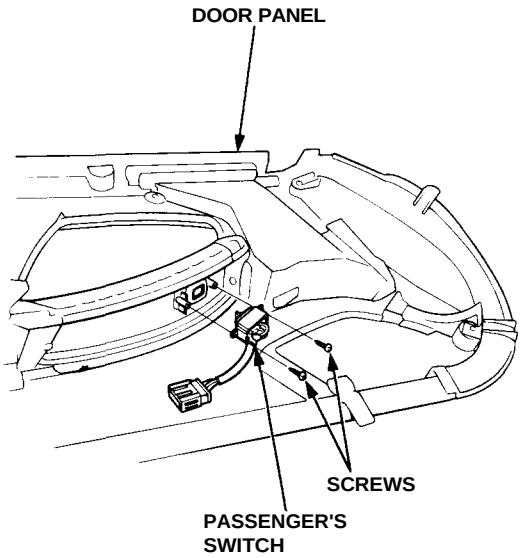

3. Install in the reverse order of removal.

Switch Light Bulb Replacement

1. Remove the door panel (see section 20).
2. Remove the four screws, then remove the power window switch from the door panel.

   NOTE: Driver's door is shown. Passenger's door is similar.

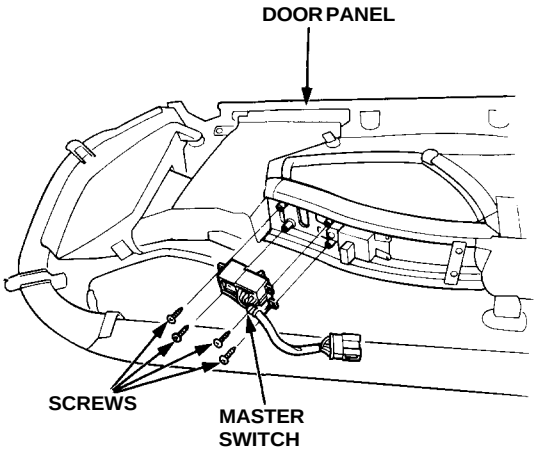

3. Remove the power window switch bulb.

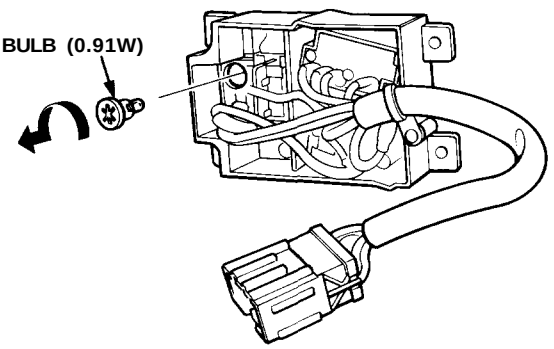

4. Install in the reverse order of removal.

Power Windows

Driver's Window Motor Test

Motor Test:

1. Remove the door panel (see section 20).
2. Disconnect the 4P connector from the driver's motor.

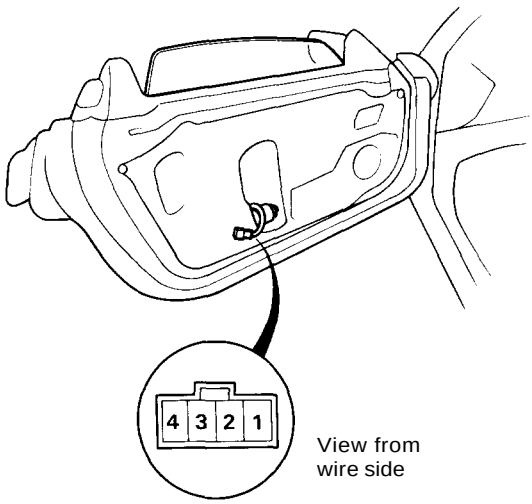

3. Test the motor by connecting battery power to the No. 4 terminal and ground to the No. 3 terminal. Test the motor in each direction, by switching the leads from the battery.

   CAUTION: When the motor stops running, disconnect one lead immediately.

4. If the motor does not run, replace it.

Pulser Test:

Connect the test leads of an analog ohmmeter to the No. 1 and No. 2 terminals and check for needle movement while running the motor by connecting battery power to the No. 4 and ground to the No. 3 terminal. The analog ohmmeter needle should move back and forth alternately.

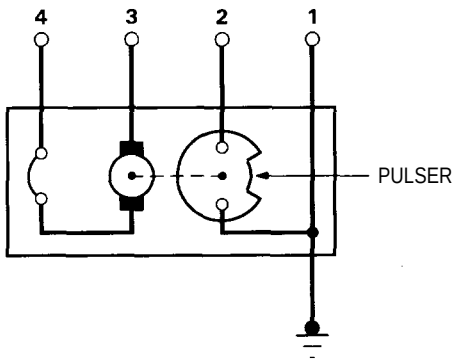

Passenger's Window Motor Test

1. Remove the door panel (see section 20).
2. Disconnect the 2P connector from the motor.

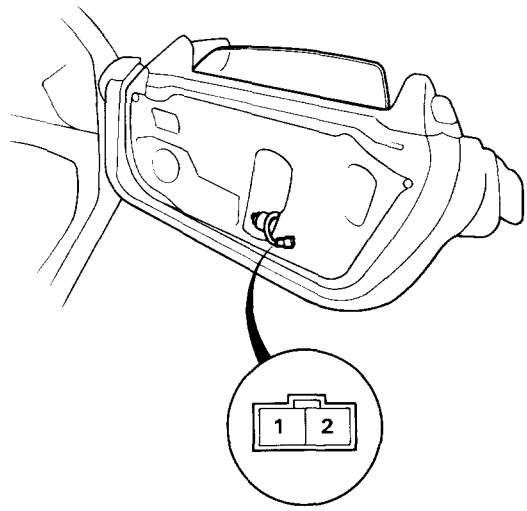

3. Test the motor by connecting battery power to the No. 1 terminal and ground to the No. 2 terminal. Test the motor in each direction, by switching the leads.

   CAUTION: When the motor stops running, disconnect one lead immediately.

4. If the motor does not run, replace it.

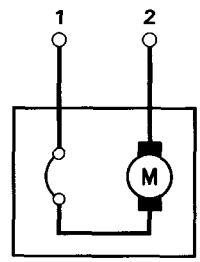

Relay Test

1. Remove the power window relay in the under-hood fuse/relay box.

2. Check continuity at the relay terminals.

   - There should be continuity between the C and D terminals.
   - There should be continuity between the A and B terminals when power and ground are connected to the C and D terminals.
   - There should be no continuity between the A and B terminals when power is disconnected.

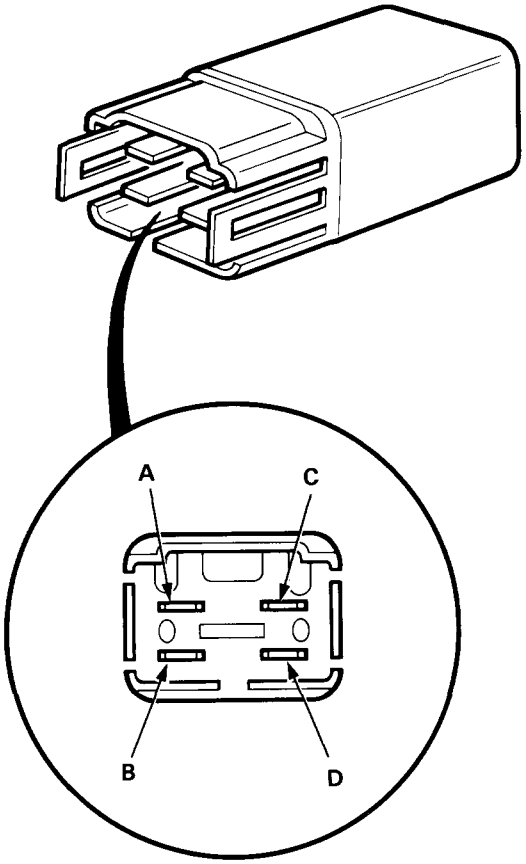

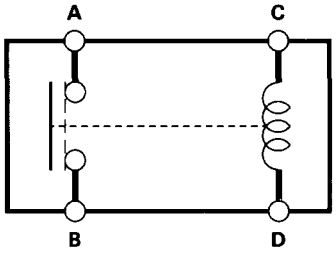

Power Seats

Component Location Index

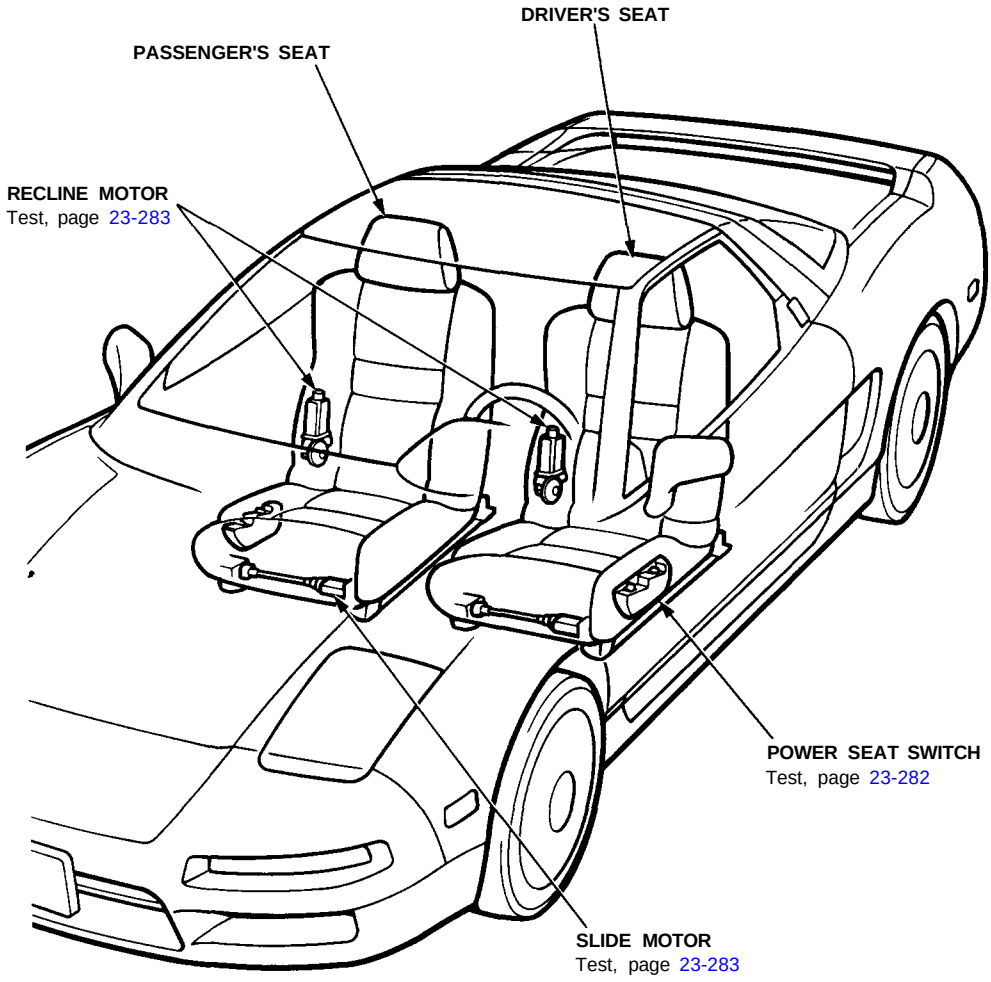

Power Seats

Seat Switch Test

CAUTION: Be careful not to damage the seats, the interior trim or the body.

1. Remove the two screws, then remove the power seat switch from the power seat.
2. Disconnect the 5P connectors from each power seat switch.
3. Check for continuity between the terminals, in each switch position, according to the table.

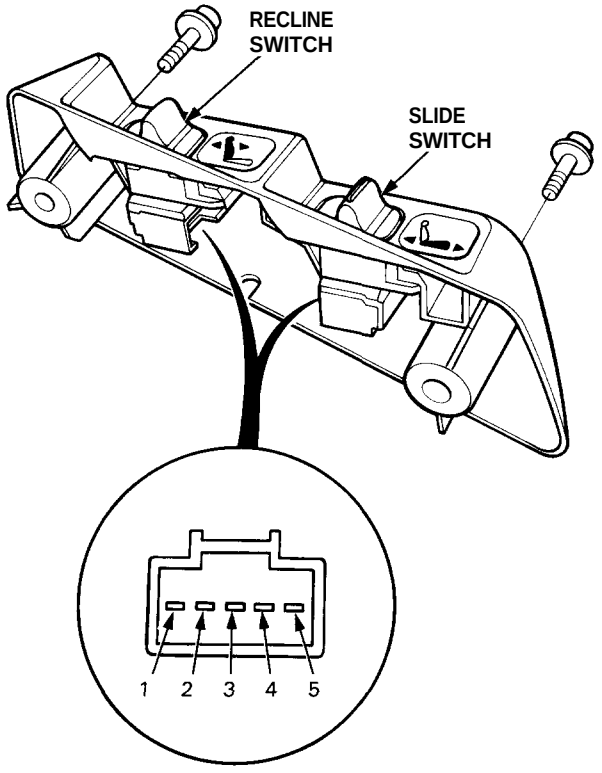

Position		Terminal 3	5	4	2	1
SLIDE	FORWARD		○—○	○—○	○—○	
	NEUTRAL	○	○—○			○
	BACKWARD	○		○—○		○
RECLINE	FORWARD	○		○—○		○
	NEUTRAL	○	○—○			○
	BACKWARD		○—○	○—○	○—○	

Motor Test

CAUTION: Be careful not to damage the seats, the interior trim or the body.

1. Remove the power seat, then disconnect the 2P connector from the slide motor.
2. Remove the two screws, then remove the power seat switch from the power seat.
3. Disconnect the 5P connector from the power seat switch (recline switch side).

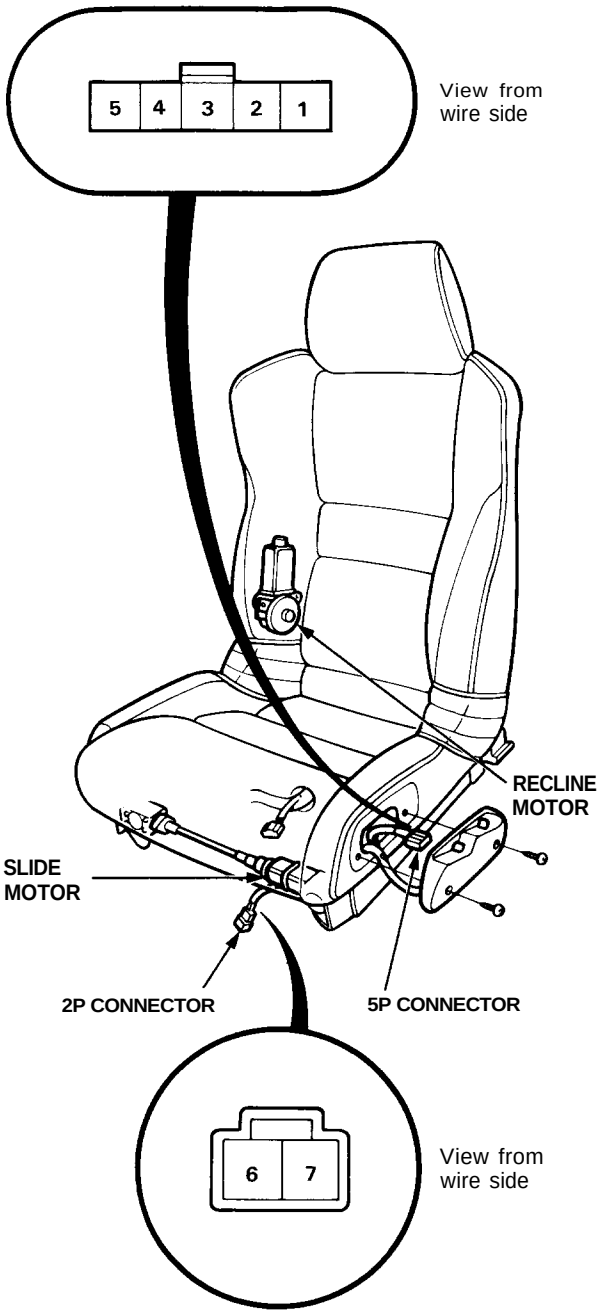

4. Test motor operation.

CAUTION: When the motor stops running, disconnect power immediately.

FORWARD
SLIDE: Connect battery power to the No. 6 terminal and ground to the No. 7 terminal.

BACKWARD
SLIDE: Connect battery power to the No. 7 terminal and ground to the No. 6 terminal.

FORWARD
RECLINE: Connect battery power to the No. 4 terminal and ground to the No. 1 terminal.

BACKWARD
RECLINE: Connect battery power to the No. 1 terminal and ground to the No. 4 terminal.

NOTE: If a motor does not run, reverse the power and ground connections. If the motor still does not run, the motor or the wire harness is faulty.

Rear Window Defogger

Component Location Index

SRS components are located in this area. Review the SRS component locations, precautions, and procedures in the SRS section 24 before performing repairs or service.

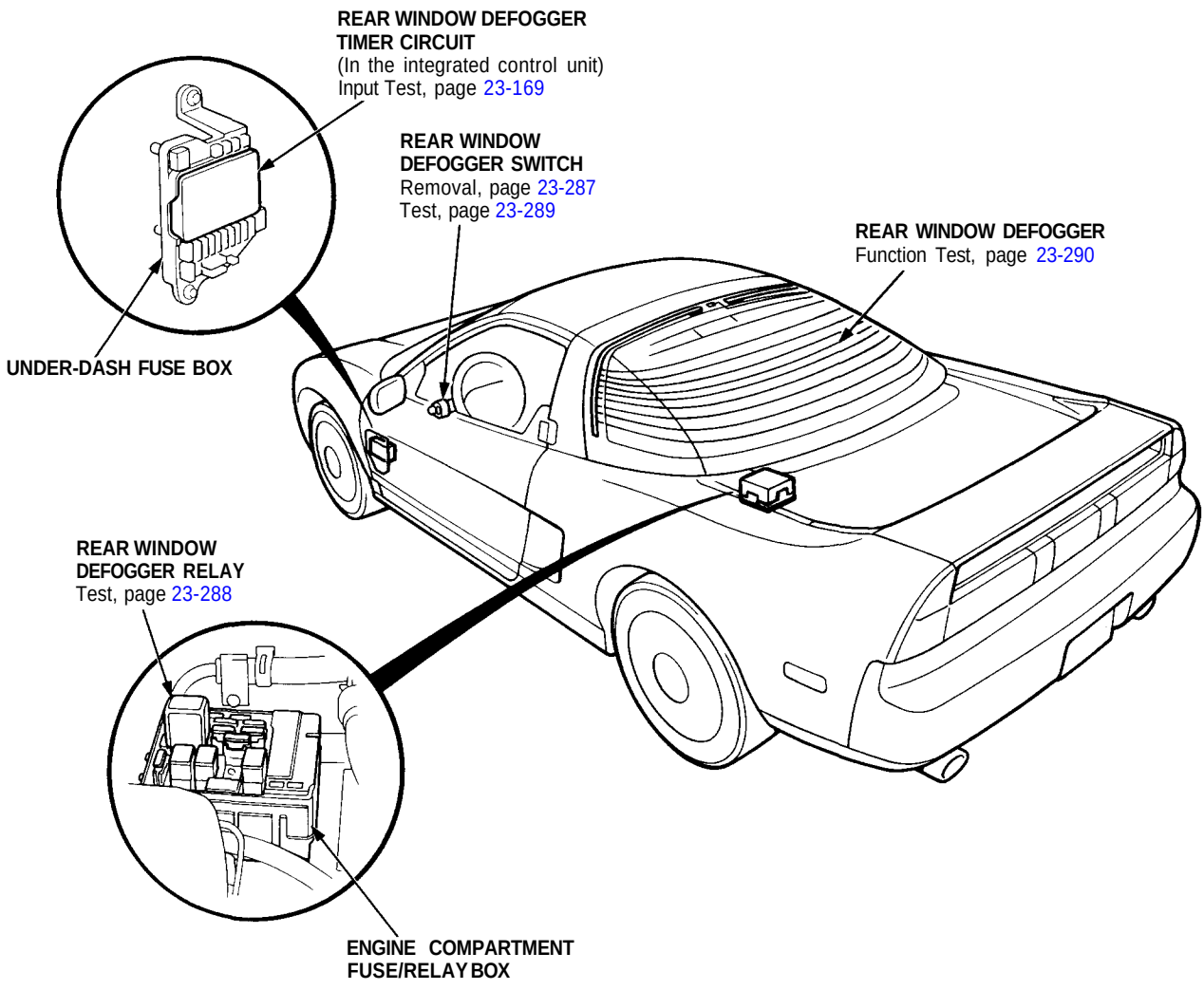

Description

The rear window defogger is controlled by the integrated control unit. When the defogger switch in the combination switch is pushed, it sends a signal to the defogger timer in the integrated control unit, and the defogger stays on for 25 minutes (40 minutes for Canada models) or until the ignition switch is turned off.
The indicator light in the switch shows when the defogger is on.

Rear Window Defogger

Troubleshooting

NOTE: The numbers in the table show the troubleshooting sequence.

Item to be inspected / Symptom	Blown indicator light bulb	Blown No 4 (15 A) fuse (In the under-dash fuse box)	Defogger timer circuit input (In the integrated control unit)	Blown No. 5 (15 A) fuse (In the under-dash fuse box)	Blown No. 11 (40 A) fuse (In the engine compartment fuse/relay box)	Rear window defogger function test	Rear window defogger relay	Broken defogger wire	Poor ground	Open circuit, loose or disconnected terminals
Defogger works, but indicator light does not go on.	1									YEL/BLK or YEL/WHT
Defogger does not work and indicator light does not go on.		1	3	2					G401 G402 G403	YEL/BLK or YEL/WHT
Defogger does not work, but indicator light goes on.					1	3	2	4	G801	YEL/WHT, YEL/BLK or BLK/GRN
Operation time is too long or too short. Normal operation time is 25 minutes (40 minutes for Canada models).			1							WHT/BLU, WHT/RED or BLK

Switch Replacement

SRS components are located in this area. Review the SRS component locations, precautions, and procedures in the SRS section 24 before performing repairs or service.

1. Remove the dashboard lower cover, and disconnect the connectors.

2. Remove the dashboard lower pad.

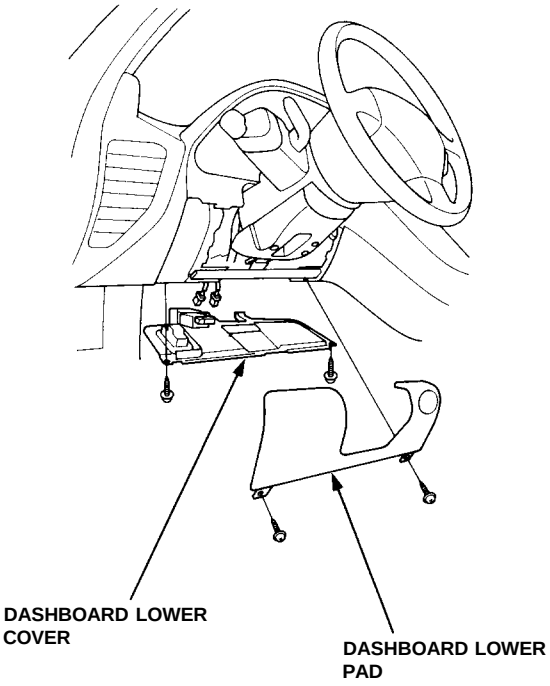

3. Remove the tilt cover.

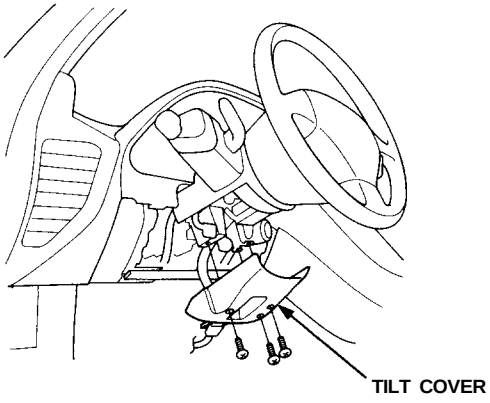

4. Remove the steering column covers.

NOTE: Be careful not to damage the steering column covers.

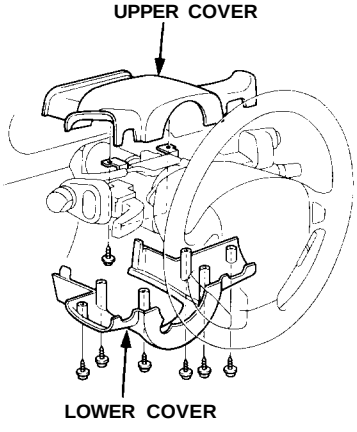

(cont'd)

Rear Window Defogger

Switch Replacement (cont'd)

5. Disconnect the 18P and 10P connectors.

   CAUTION: Be careful not to damage the SRS wire harness.

6. Remove the six screws, then remove the rear window defogger-light switch assembly.

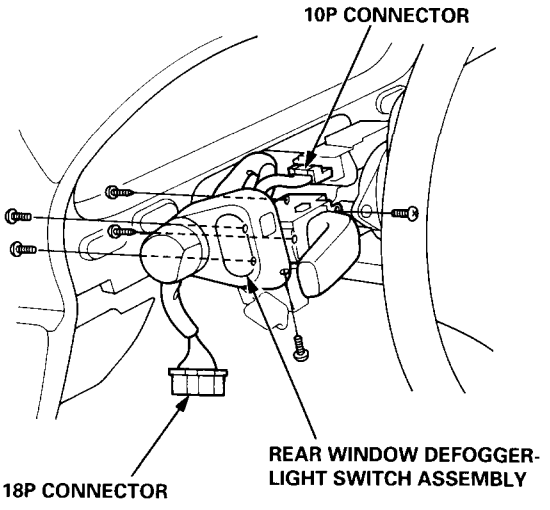

7. If necessary, replace the rear window defogger switch bulbs.

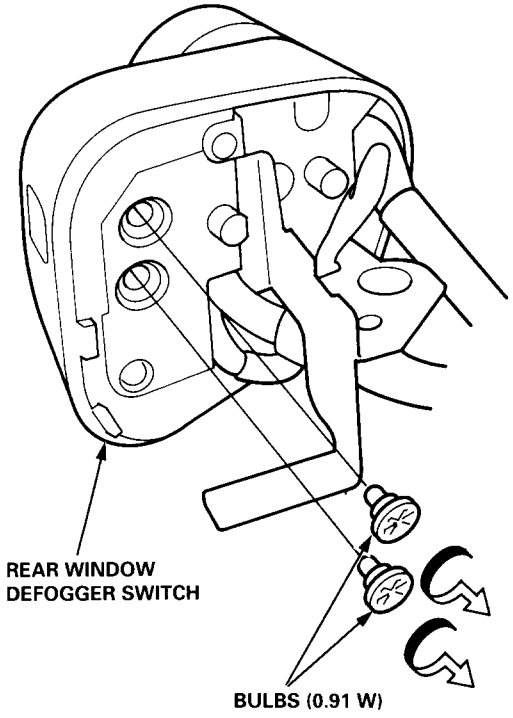

Rear Window Defogger

Relay Test

1. Remove the defogger relay in the engine compartment fuse/relay box.

2. Check continuity at the relay terminals.

   - There should be continuity between the C and D terminals.
   - There should be continuity between the A and B terminals when power and ground are connected to the C and D terminals.
   - There should be no continuity between the A and B terminals when power is disconnected.

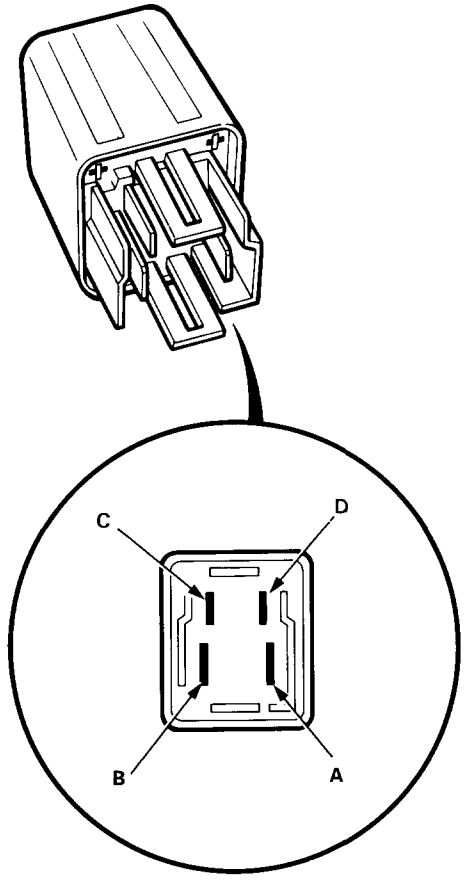

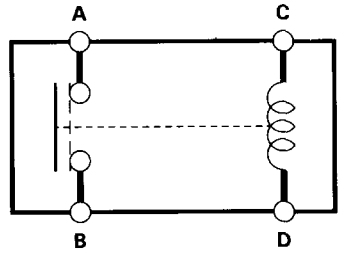

Switch Test

1. Remove the dashboard lower cover (see page 23-287).
2. If necessary, remove the dashboard lower pad.
3. Disconnect the 18P connector from the floor wire harness.
4. Check for continuity between the terminals in each switch position according to the table.

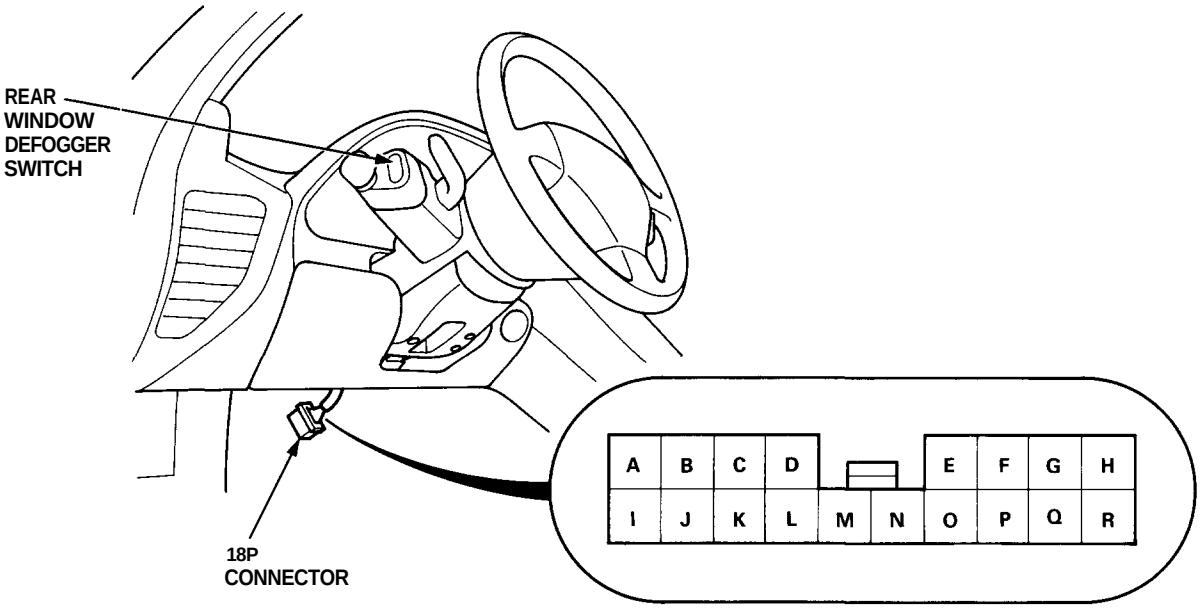

View from wire side

Terminal / Position	B	I	H		R	A		Q
PUSHED	○	○	○	○	○	○	○	○
RELEASED								

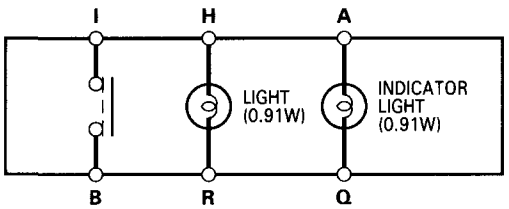

Rear Window Defogger

Function Test

CAUTION: Be careful not to scratch or damage the defogger wires with the tester probe.

1. Check for voltage between the positive terminal and body ground with the ignition switch and the defogger switch ON. There should be battery voltage.

   - If there is no voltage, check for:
     — Faulty defogger relay.
     — An open in the BLK/GRN wire.
   - If there is battery voltage, go to step 2.

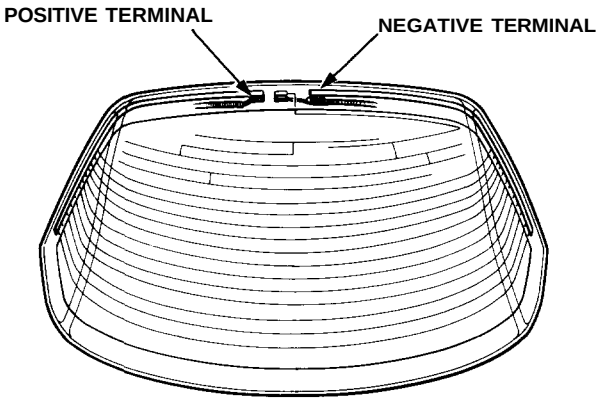

2. Disconnect the positive terminal, check for continuity between the negative terminal and body ground. If there is no continuity, check for an open in the defogger ground wire.

3. Reconnect the positive terminal, touch the voltmeter positive lead to the middle of each defogger wire, and the negative lead to the negative terminal. There should be approximately 6 V with the ignition switch and the defogger switch ON.

   - If the voltage is as specified, the defogger wire is OK.
   - If there is battery voltage, the defogger wire is broken on the negative side.
   - If there is no voltage, the defogger wire is broken on the positive side.

Defogger Wires Repair

To make an effective repair, the broken section must be no longer than one inch.

1. Lightly scrub the area around the break with fine steel wool, then clean it with alcohol.

2. Carefully mask above and below the broken section with cellophane tape.

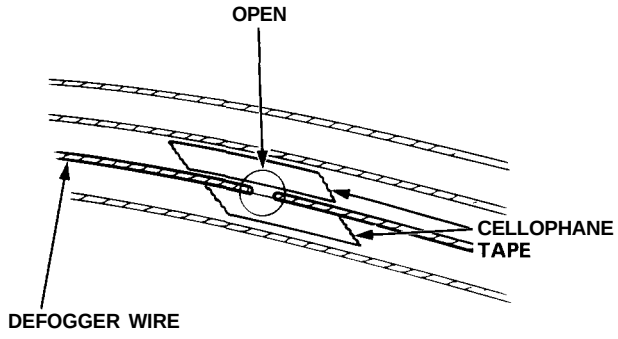

3. Using a small brush, apply a heavy coat of silver conductive paint extending about 1/8" on both sides of the break. Thoroughly mix the paint before use. Let it dry for thirty minutes.

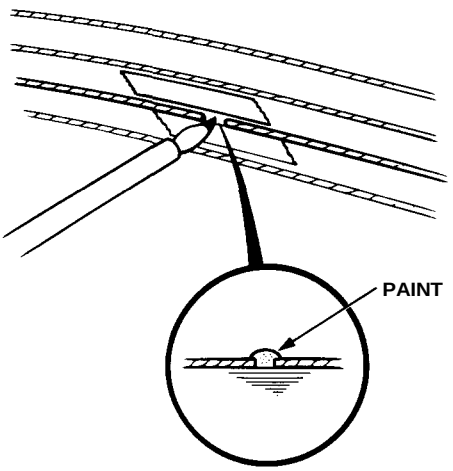

4. Check for proper operation with a voltmeter (it should read half of battery voltage at the midpoint).

5. Apply a second coat of paint in the same way. Let it dry for three hours before removing the tape.

Wipers/Washers

Component Location Index

SRS components are located in this area. Review the SRS component locations, precautions, and procedures in the SRS section 24 before performing repairs or service.

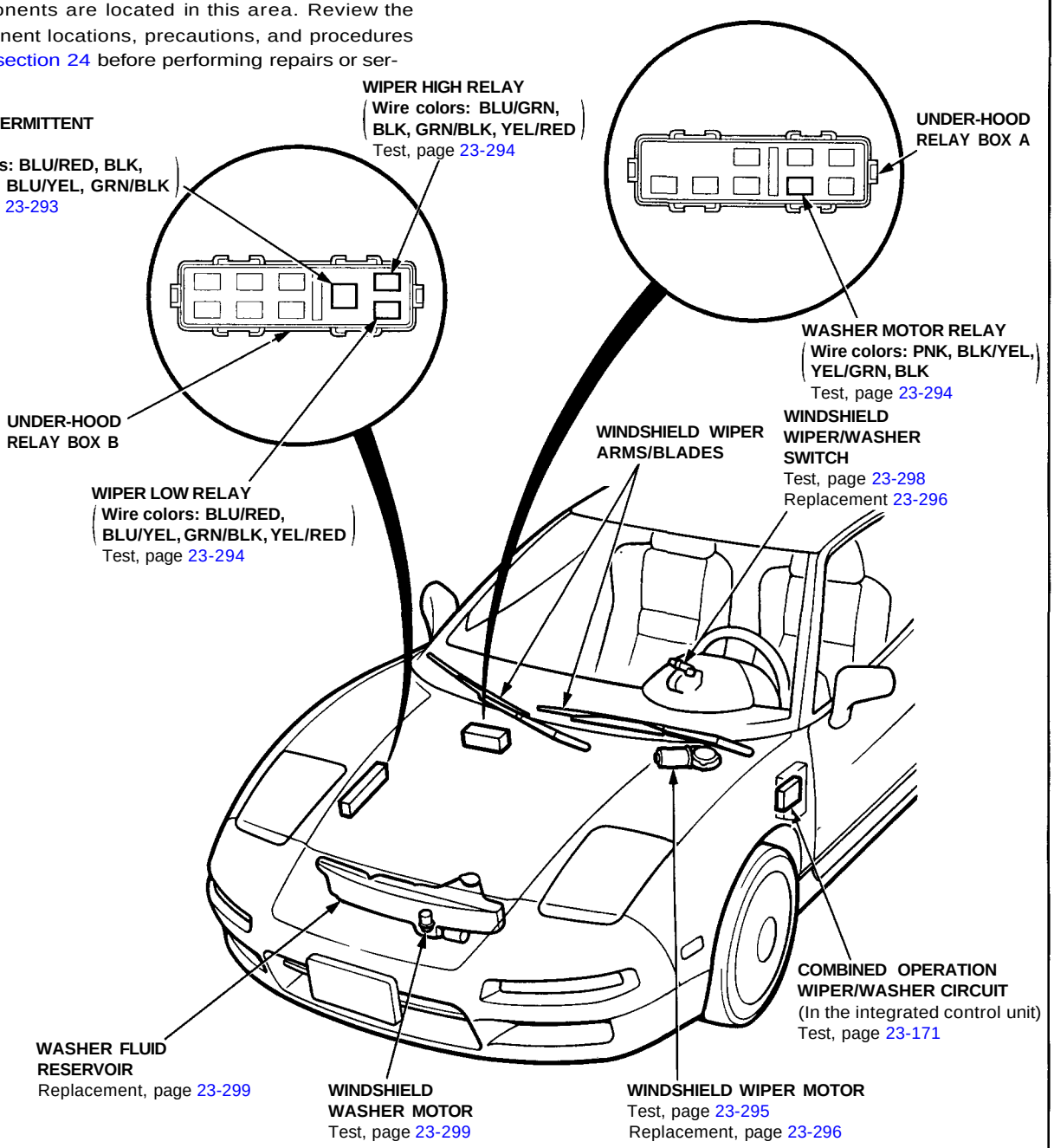

Description

The system is equipped with an intermittent relay, a low relay and a high relay. Wiper operation at INT and LO positions is controlled by the intermittent wiper circuit (incorporated in the integrated control unit).

Troubleshooting

NOTE: The numbers in the table show the troubleshooting sequence.

Symptom \ Item to be inspected		Blown No. 26 (40 A) fuse (In the under-hood fuse/relay box)	Blown No. 6 (7.5 A) fuse (In the under-dash fuse box)	Wiper switch	Mist switch	Wiper motor assembly	Washer switch	Washer motor	Intermittent wiper relay	Wiper low relay	Wiper high relay	Washer relay	Combined operation wiper/washer (In the integrated control unit)	Insufficient washer fluid in reservoir	Disconnected or blocked washer hose, or clogged outlet	Disconnected wiper linkages	Intermittent dwell time controller	Poor ground	Open circuit, loose or disconnected terminals
Wipers do not work.	In all positions	1		4		2										3		G201 G202	GRN/BLK
	In INT			1		4			2	3			5					G202	BLU/WHT
	In LO			1		4			2	3			5					G202	BLU/RED
	In HI			1		3					2							G401 G402 G403	BLU/GRN
	In MIST				1						2								YEL/RED
Blades do not return to park position when wipers are turned OFF.				2		1			3	4									BLU/WHT
Erratic intermittent cycle or wipers do not operate intermittently.									1				3				2		BLU/RED, BRN/RED or BRN/YEL
Little or no washer fluid is pumped.			2				6	4				5		1	3			G201 G301	PNK or YEL/GRN
Wipers do not work simultaneously with washer.													1						BLU/RED

Intermittent Wiper Relay Test

1. Remove the wiper intermittent relay from the under-hood relay box B.

2. There should be continuity between the A and C terminals when power and ground are connected to the E and F terminals.
   There should be continuity between the B and C terminals when power is disconnected.

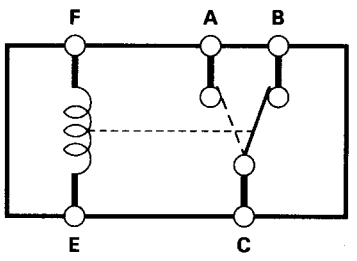

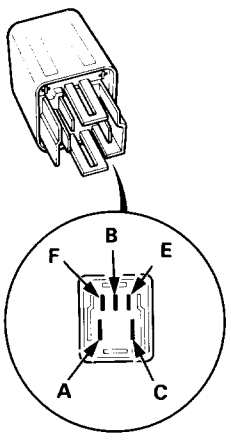

High Relay/Washer Relay Test

1. Remove the wiper high relay or the washer relay from under-hood relay box B.
2. Check continuity at the relay terminals.
   - There should be continuity between the C and D terminals.
   - There should be continuity between the A and B terminals when power and ground are connected to the C and D terminals.
   - There should be no continuity between the A and B terminals when power is disconnected.

- **Wiper high relay**

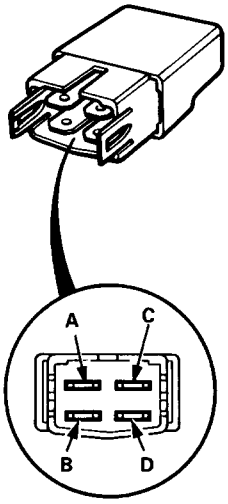

- **Washer motor relay**

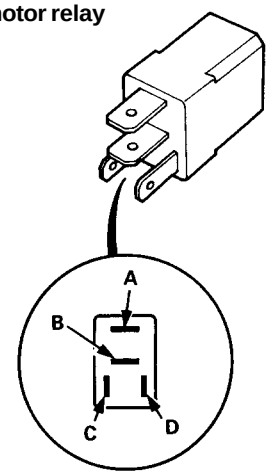

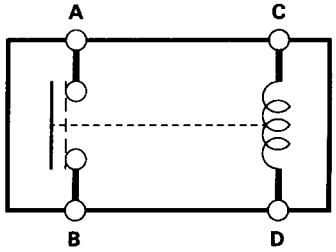

Low Relay Test

1. Remove the wiper low relay from under-hood relay box B.
2. Check continuity at the relay terminals.
   - There should be continuity between the C and D terminals.
   - There should be no continuity between the A and B terminals when power and ground are connected to the C and D terminals.
   - There should be continuity between the A and B terminals when the power is disconnected.

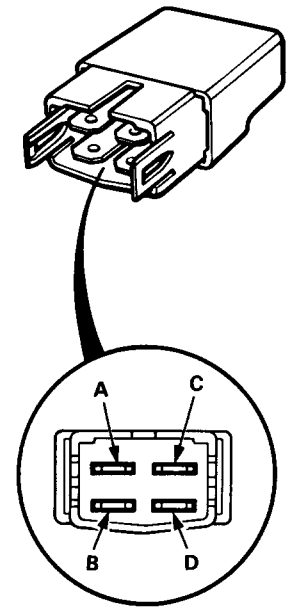

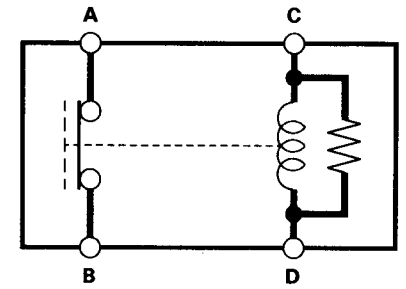

Windshield Wiper Motor Test

1. Open the hood, and remove the cap nuts and the wiper arms. Don't let the wiper arms hit the hood.

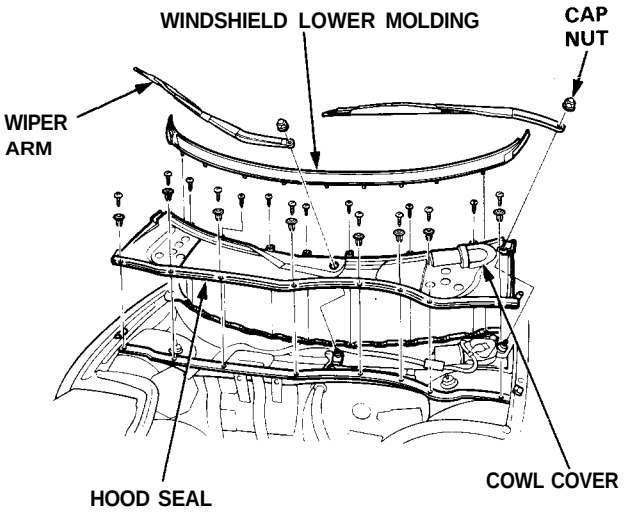

2. Remove the windshield lower molding, hood seal and cowl cover by prying off the trim clips and removing the screws.

3. Disconnect the 5P connector from the wiper motor assembly.

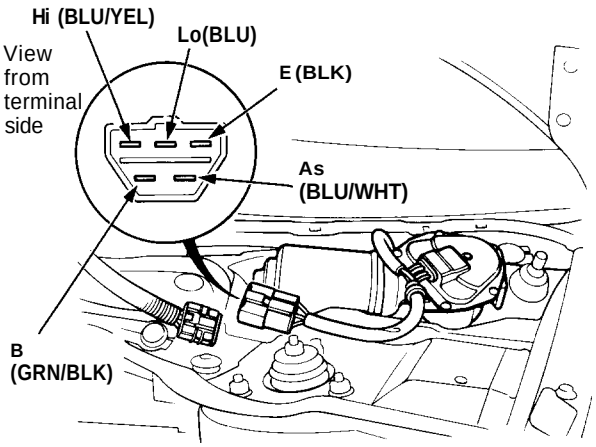

4. Test motor operation:

   LOW SPEED: Connect battery power to the B (GRN/BLK) terminal and ground to the Lo (BLU) terminal.

   HIGH SPEED: Connect battery power to the B (GRN/BLK) terminal and ground to the Hi (BLU/YEL) terminal.

   If the motor fails to run smoothly, replace it.

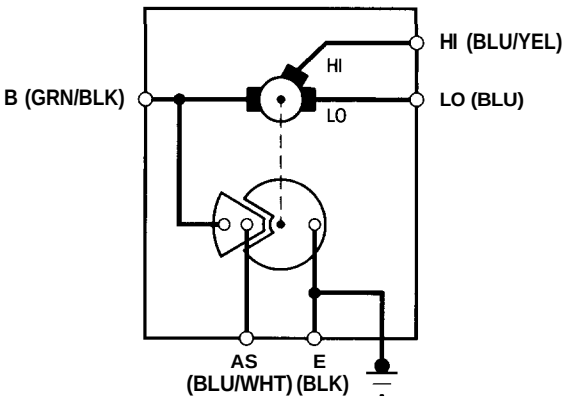

5. Connect an analog voltmeter, between the As (BLU/WHT) and the E (BLK) terminals. Run the motor by connecting battery power to the B (GRN/BLK) terminal and ground to the Lo (BLU) terminal.

   The voltmeter reading should alternately indicate 0 V and more than 4 V.

Windshield Wiper Motor Replacement

1. Open the hood, and remove the cap nuts and the wiper arms. Don't let the wiper arms hit the hood.

2. Remove the windshield lower molding, hood seal and cowl cover by prying off the trim clips and removing the screws (see page 23-295).

3. Disconnect the 5P connector from the wiper motor assembly, then remove the two mounting bolts and the wiper linkage assembly.

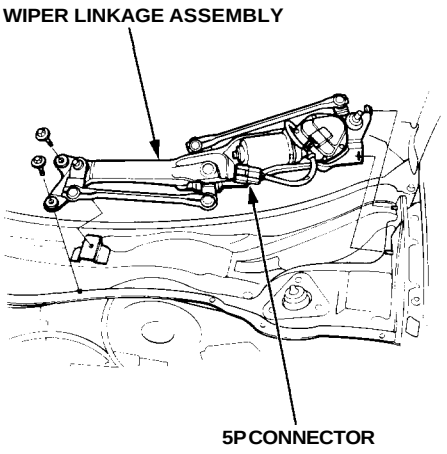

4. Remove the three mounting bolts and nut from the wiper linkage assembly, and remove the wiper motor.

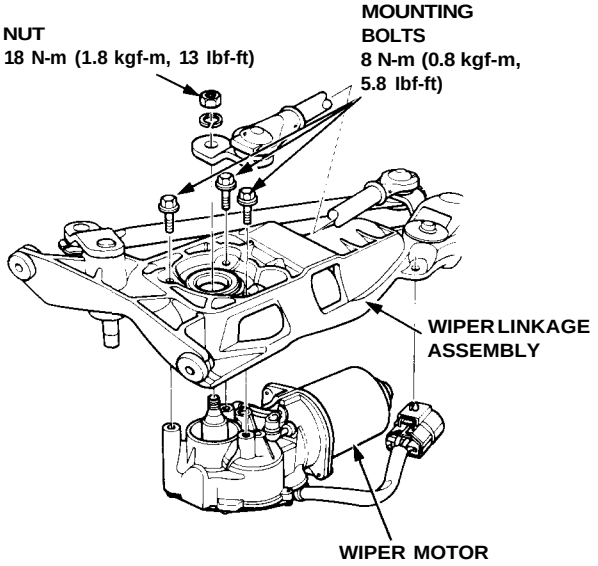

5. Install the wiper motor assembly in the reverse order of removal.

Windshield Wiper/Washer Switch — Replacement

SRS components are located in this area. Review the SRS component locations, precautions, and procedures in the SRS section 24 before performing repairs or service.

1. Remove the dashboard lower cover, and disconnect the connectors.

2. Remove the dashboard lower pad.

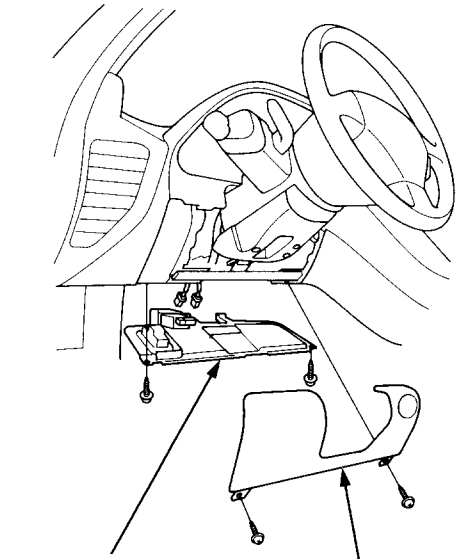

3. Remove the tilt cover.

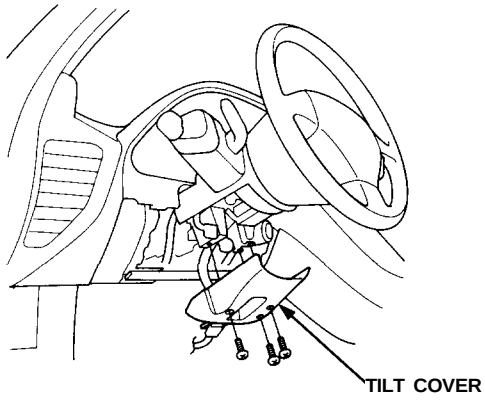

4. Remove the steering column covers.

NOTE: Be careful not to damage the steering column covers.

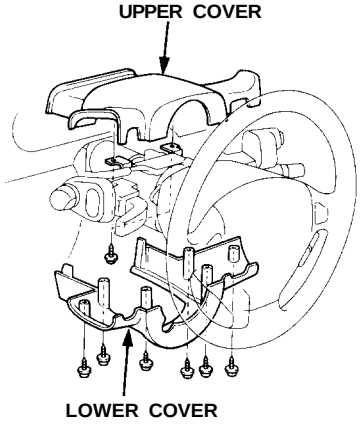

5. Disconnect the 20P, 4P and 5P connectors.

CAUTION: Be careful not to damage the SRS wire harness.

6. Remove the six screws, then remove the windshield wiper-cruise control switch assembly.

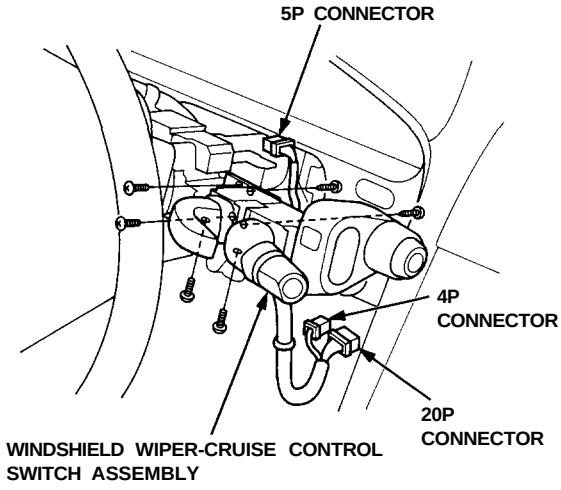

7. Install in the reverse order of removal.

Windshield Wiper/Washer Switch Test

1. Remove the dashboard lower cover (see page 23-296).
2. Disconnect the 20P connector from the floor wire harness.
3. Check for continuity between the terminals in each switch position according to the table.

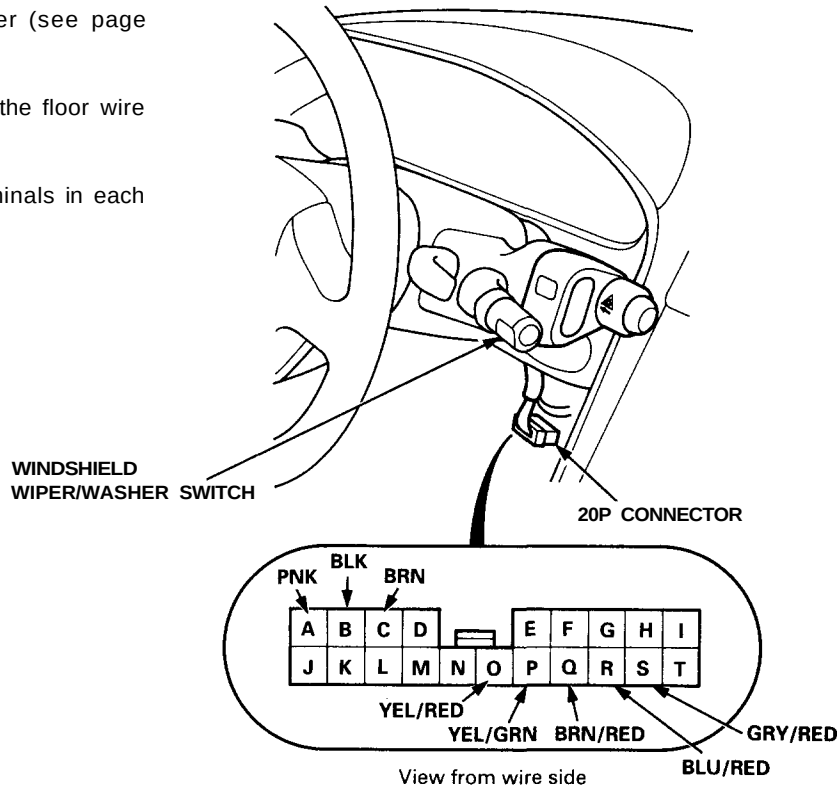

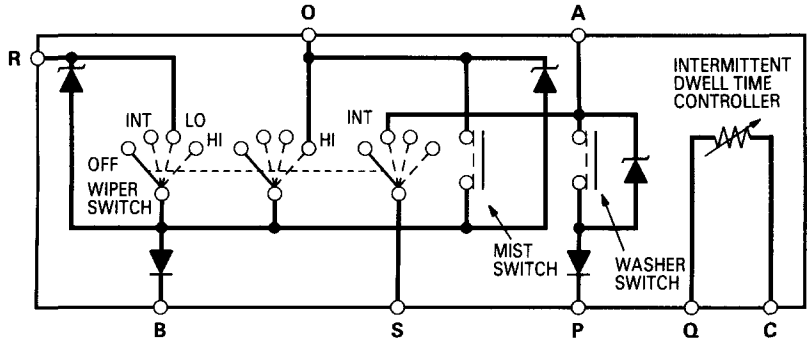

Terminal / Position	A	B	C		O		P	Q	R	S
INT	○									○
LO		○		◁					○	
HI		○		◁	○					
MIST switch "ON"		○		◁	○	▷			○	
Washer switch "ON"	○			▷			○			
Intermittent dwell time controller turned			○			0-10kΩ		○		

Washer Replacement

1. Disconnect the hose and the 2P connectors from the washer motor.

2. Remove the bumper, then remove the washer reservoir by removing the three mounting bolts.

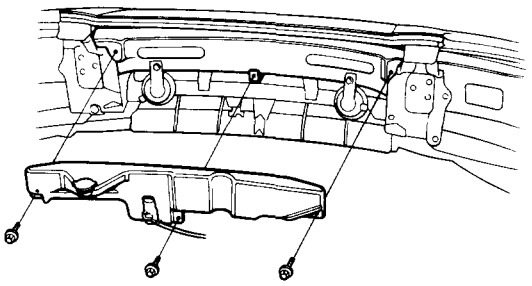

3. Remove the washer nozzles.

4. Install the washer nozzles, and take note of the following:

- Clip the hose to the front harness.
- Take care not to pinch hoses during reinstallation.
- Install the clips firmly.
- After installation, adjust the washer nozzles.

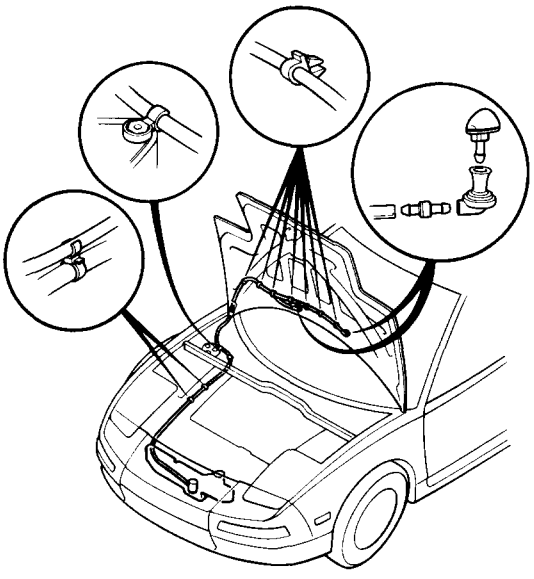

Windshield Washer Motor Test

1. Disconnect the 2P connector from the washer motor and remove the front bumper.

2. Test the washer motor operation by connecting power to the ⊕ terminal and ground to the ⊖ terminal.

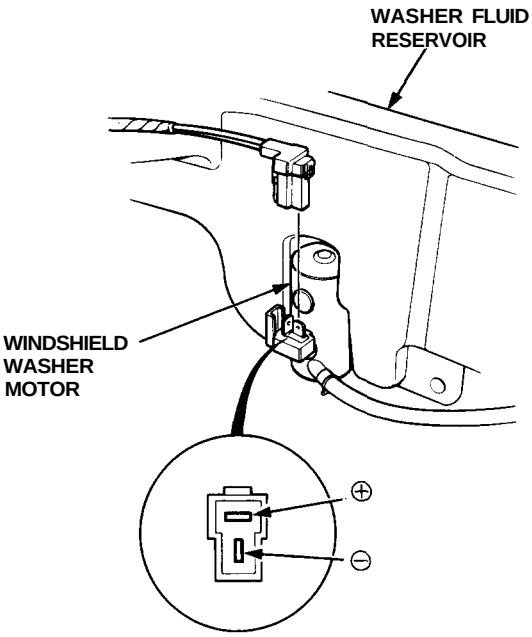

- If the motor fails to run smoothly, replace it.
- If the motor runs smoothly but little or no washer fluid is pumped, check for a disconnected or blocked washer hose, or a clogged pump outlet in the motor.

Cruise Control

Component Location Index

SRS components are located in this area. Review the SRS component locations, precautions, and procedures in the SRS (section 24) before performing repairs or service.

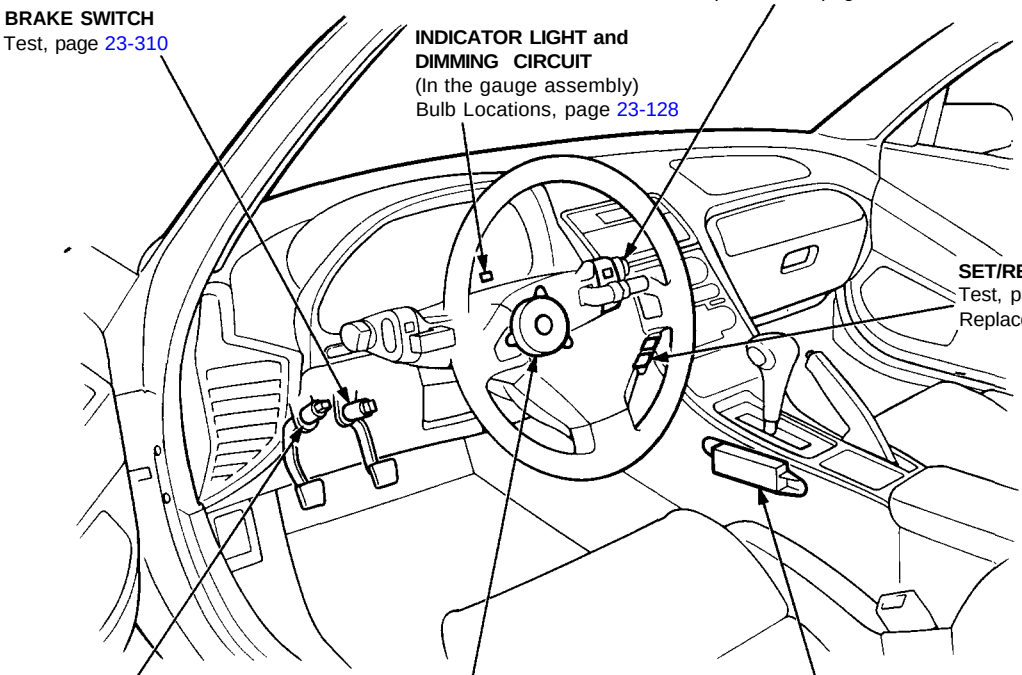

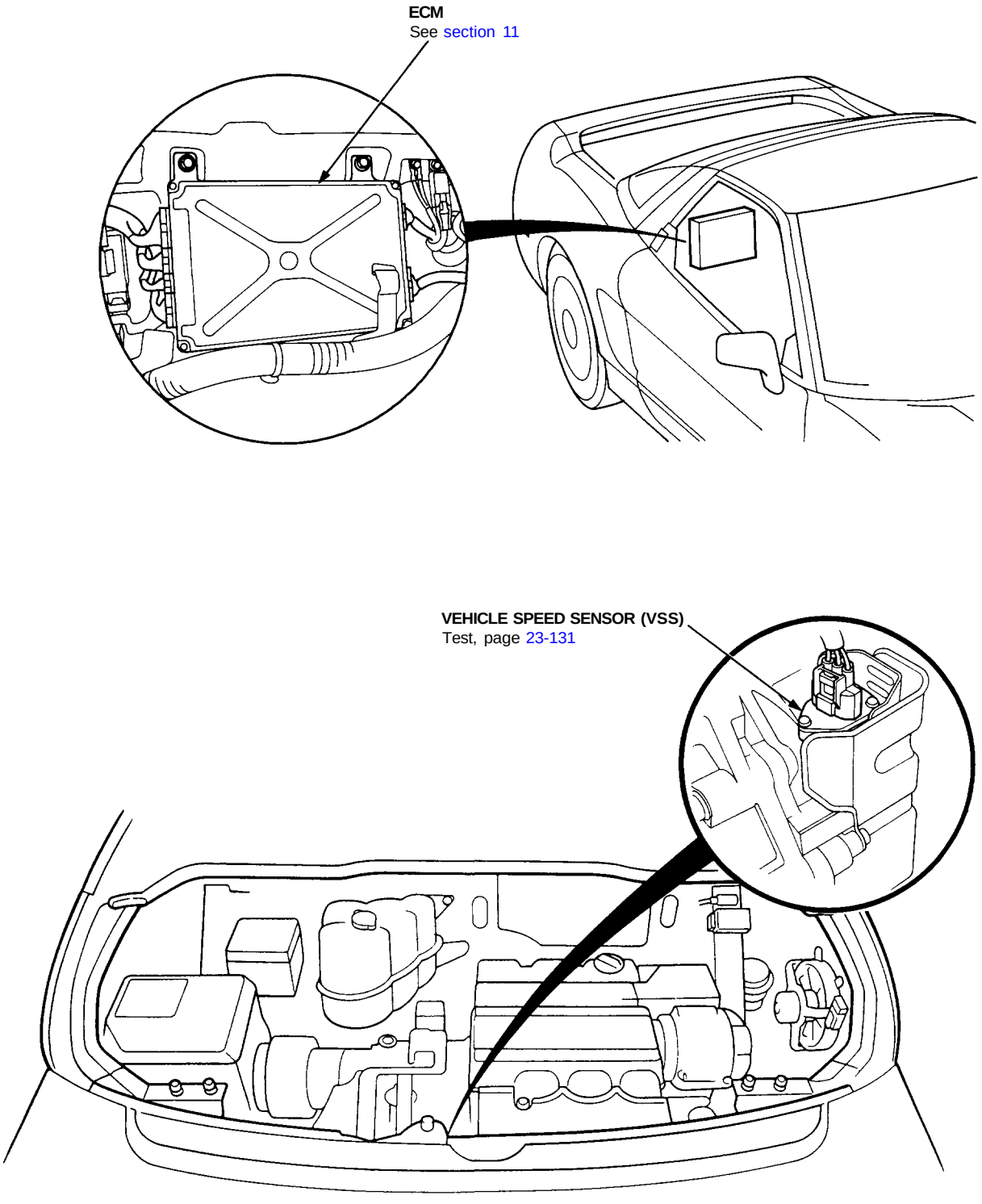
ECM
See section 11
VEHICLE SPEED SENSOR (VSS)
Test, page 23-131

Cruise Control

Description

The cruise control system uses mechanically and electrically operated devices to maintain vehicle speed at a setting selected by the driver.

The ECM receives command signals from the cruise control main switch and the cruise control set/resume switch. It receives information about operating conditions from the brake switch, vehicle speed sensor (VSS), the clutch switch (with manual transmission), or the A/T gear position switch (with automatic transmission). The ECM sends operational signals to the devices that regulate the throttle position. The throttle position maintains the selected vehicle speed. Essentially, the ECM compares the actual speed of the vehicle to the selected speed. Then, it uses the result of that comparison to open or close the throttle.

The brake switch releases the system's control of the throttle at the instant the driver depresses the brake pedal. The switch sends an electronic signal to the ECM when the brake pedal is depressed; the ECM responds by allowing the throttle to close. The clutch switch (manual transmission) or the A/T gear position switch (automatic transmission) sends a disengage signal to the ECM that also allows the throttle to close.

Operation:

The cruise control system will set and automatically maintain any speed above 25 mph (45 km/h). To set, make sure that the main switch is in the "ON" position. After reaching the desired speed, press the set switch. The ECM will receive a set signal and, in turn, will actuate the throttle valve control motor. When the set switch is depressed and the cruise control system is on, the "cruise control" ON indicator in the gauge assembly will light up. You can cancel the cruise control system by pushing the main switch to "OFF". This erases the set speed from memory. If the system is disengaged temporarily by the brake switch, clutch switch, or A/T gear position switch and vehicle speed is still above 25 mph, press the resume switch. With the resume switch depressed and the set memory retained, the vehicle automatically returns to the previous set speed.

For gradual acceleration without depressing the accelerator pedal, push the resume switch down and hold it there until the desired speed is reached. This will send an acceleration signal to the ECM. When the switch is released, the system will be reprogrammed for the new speed. To slow down, depress the set switch. This will send a deceleration signal to the ECM causing the car to coast until the desired speed is reached. When the desired speed is reached, release the set switch. This will reprogram the system for the new speed.

Cruise Control

Troubleshooting

NOTE:
- The numbers in the table show the troubleshooting sequence.
- Before troubleshooting:
  - — Check the No. 5 (15 A) fuse in the under-dash fuse box, and the No. 29 (50 A) and No. 45 (20 A) fuses in the under-hood fuse/relay box.
  - — Check that the horns sound.
  - — Make sure that the headlights go off.

Items to be inspected / Symptom	Control switch	SET/RESUME switch	Brake switch/adjustment	Clutch switch/adjustment (M/T)	A/T gear position switch (A/T)	VSS	Dimming circuit in gauges	ECM	Poor ground	Open circuit, loose or disconnected terminals
Cruise control can't be set.	2	3	4	5				1	G101 G401 G402 G403	BLU/RED, LT GRN/RED, LT GRN, GRY, BLU/ORN, GRN/WHT or ORN
Cruise control can be set, but indicator light does not go on.							2	1	G401 G402 G403	YEL or BLU/BLK
Cruise speed is noticeably higher or lower than what was set.						1		3		
Excessive overshooting and/or undershooting when trying to set speed.						2		3		
Steady speed is not held even on a flat road with cruise control set.						1		3		
Car does not decelerate or accelerate accordingly when SET or RESUME button is pushed.		1						2		LT GRN/BLK LT GRN/RED
Set speed is not canceled when clutch pedal is pushed (M/T).				1				2		
Set speed is not canceled when shift lever is moved to N (A/T).					1			2		
Set speed is not canceled when brake pedal is pushed.			1					2		
Set speed is not canceled when control switch is pushed OFF.	1							2		
Set speed is not resumed when RESUME button is pushed (with main switch on, but set speed temporarily canceled).		1						2		

Control Unit Input Test

SRS components are located in this area. Review the SRS component locations, precautions, and procedures in the SRS section 24 before performing repairs or service.

Remove the bulkhead panel, then disconnect the connectors from the ECM and make the following tests.

Inspect the connector and socket terminals to be sure they are all making good contact.

- If the terminals are bent, loose, or corroded, repair them as necessary, and recheck the system.
- If the terminals look OK, make the following input tests at the connector.
  - — If any test indicates a problem, find and correct the cause, then recheck the system.
  - — If all the input tests prove OK, the ECM must be faulty; replace it.

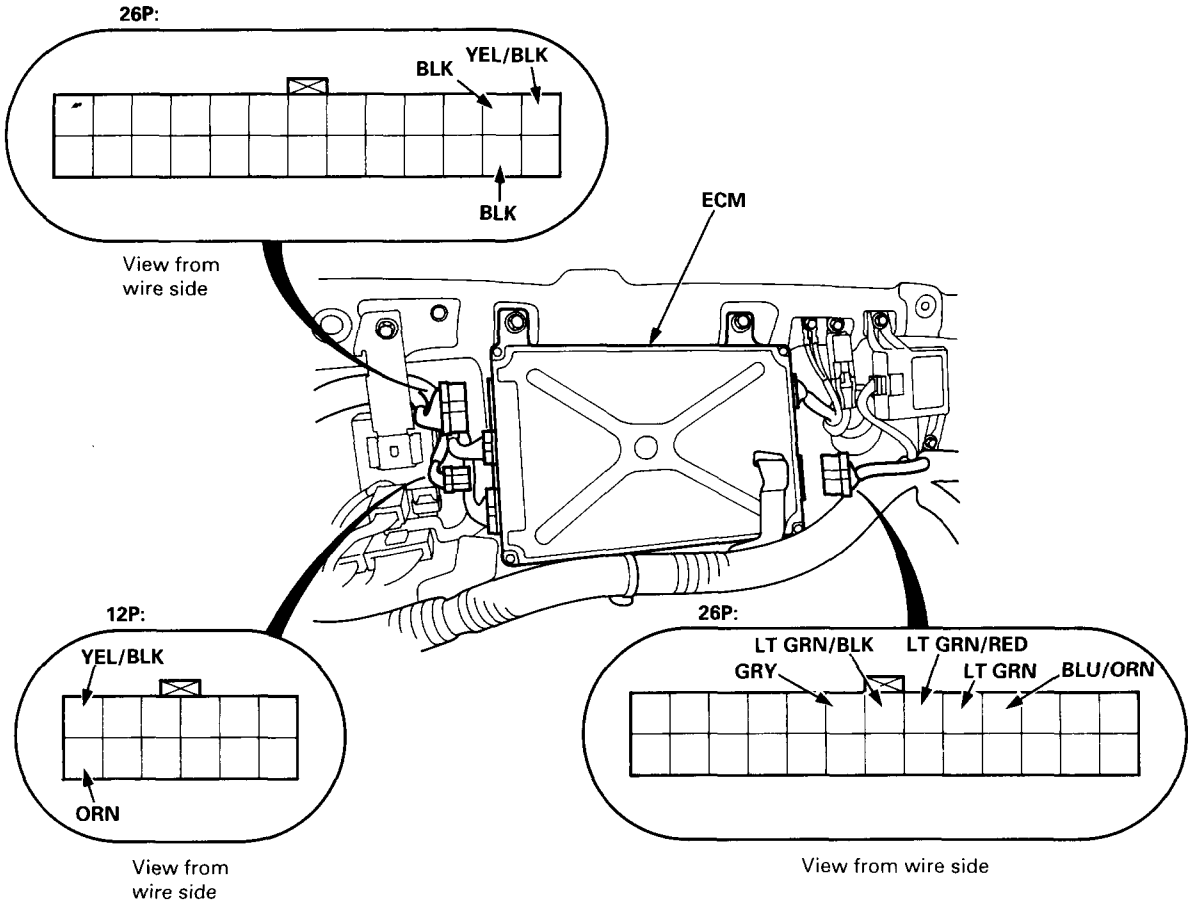

(cont'd)

Control Unit Input Test (cont'd)

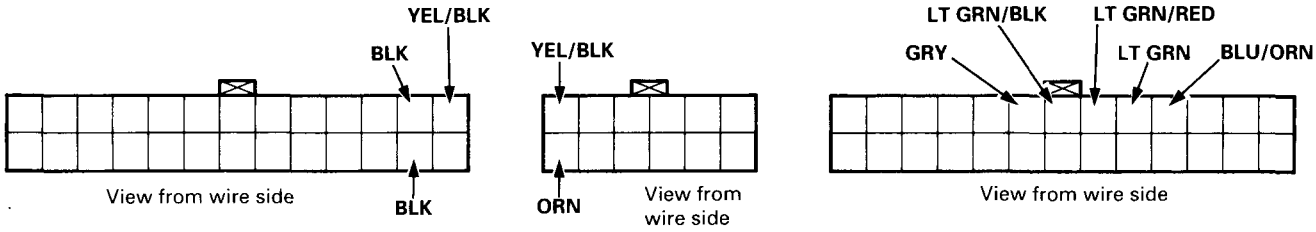

Wire	Test condition	Test: Desired result	Possible cause if result is not obtained
BLK	Under all conditions	Check for continuity to ground: There should be continuity.	• Poor ground (G101) • An open in the wire
YEL/BLK	Ignition switch ON (II)	Check for voltage to ground: There should be battery voltage.	• Blown No. 18 (20 A) fuse • An open in the wire
LT GRN	Ignition switch ON (II) and control switch ON	Check for voltage to ground: There should be battery voltage.	• Blown No. 5 (15 A) fuse • Faulty control switch • An open in the wire
LT GRN/ BLK	RESUME button pushed	Ground each terminal: Horns should sound as the switch is pushed.	• Blown No. 45 (20 A) fuse • Faulty SET/RESUME switch • Faulty cable reel • An open in the wire
LT GRN/ RED	SET button pushed		
BLU/ORN	M/T: Clutch pedal released A/T: Shift lever in 2, 3/M or D	Check for continuity to ground: There should be continuity.	• Faulty or misadjusted clutch switch (M/T) • Faulty A/T gear position switch (A/T) • Poor ground (G401, G402, G403) • An open in the wire
ORN	Ignition switch ON (II) and main switch ON; raise the rear of the car, and rotate one wheel slowly.	Check for voltage between the YEL/RED⊕ and BLK⊖ terminals: There should be 0 - 5 V or more - 0 - 5 V or more repeatedly.	• Faulty vehicle speed sensor (VSS) • An open in the wire
GRY	Ignition switch ON (II), main switch ON; brake pedal pushed, then released	Check for voltage to ground: There should be 0 V with the pedal pushed and battery voltage with the pedal released.	• Faulty brake switch • An open in the wire
GRN/WHT	Brake pedal pushed, then released	Check for voltage to ground: There should be battery voltage with the pedal pushed, and 0 V with the pedal released.	• Faulty brake switch • An open in the wire
BLU/BLK	Ignition switch ON (II)	Attach to ground: The indicator light in the gauge assembly should come on.	• Blown bulb • Blown No. 5 (15 A) fuse • Faulty dimming circuit in the gauge assembly • An open in the wire

Main Switch Replacement

SRS components are located in this area. Review the SRS component locations, precautions, and procedures in the SRS section 24 before performing repairs or service.

1. Remove the dashboard lower cover, and disconnect the connectors.
2. Remove the dashboard lower pad.

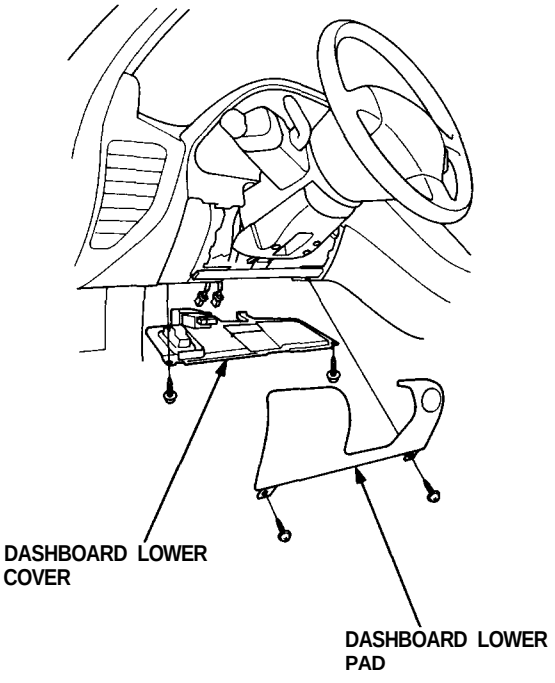

3. Remove the tilt cover.

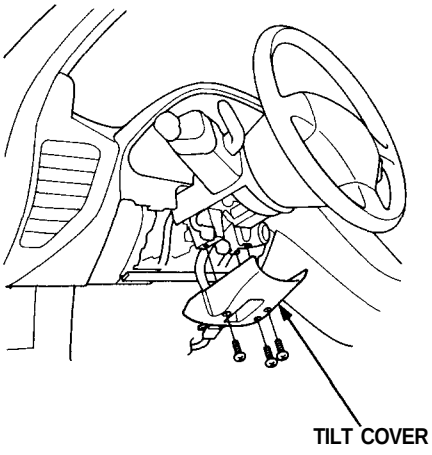

4. Remove the steering column covers.

NOTE: Be careful not to damage the steering column covers.

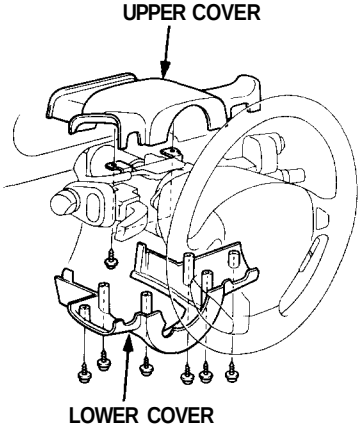

(cont'd)

Main Switch Replacement (cont'd)

5. Disconnect the 20P, 4P and 5P connectors from the floor wire harness.

   CAUTION: Be careful not to damage the SRS wire harness.

6. Remove the six screws, then remove the windshield wiper-cruise control switch assembly.

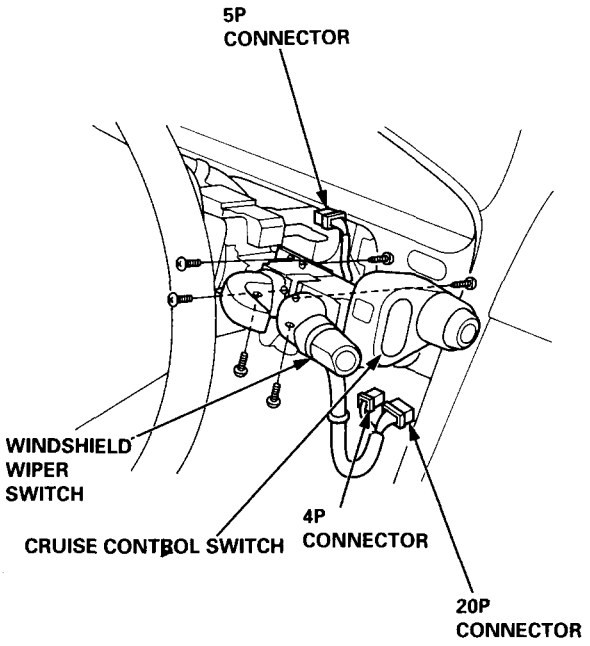

7. If necessary, replace the cruise control switch bulbs.

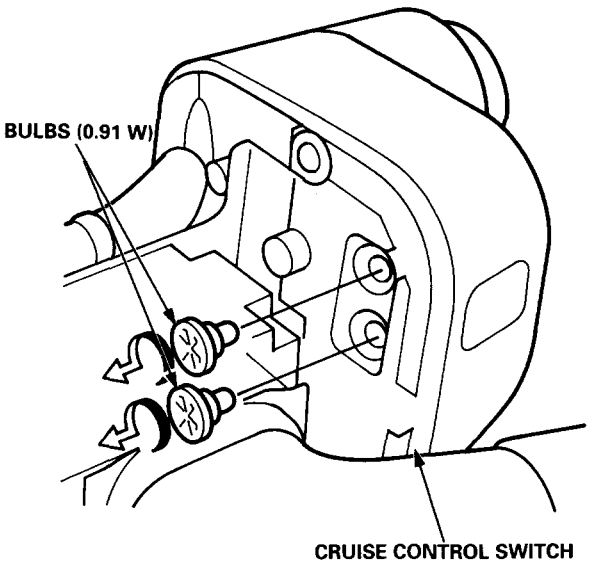

Main Switch Test

1. Remove the dashboard lower cover (see page 23-307).
2. If necessary, remove the dashboard lower pad.
3. Disconnect the 20P connector, and check for continuity between the terminals, in each switch position, according to the table.

Terminal / Position	M	L		B	H		G
OFF		○	○	○	○	○	○
ON	○	○	○	○	○	○	○

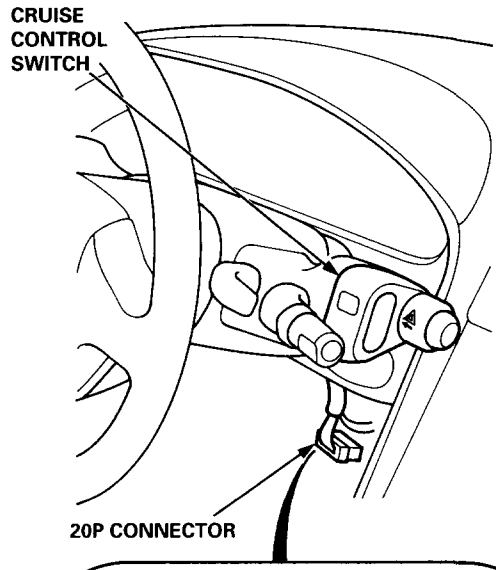

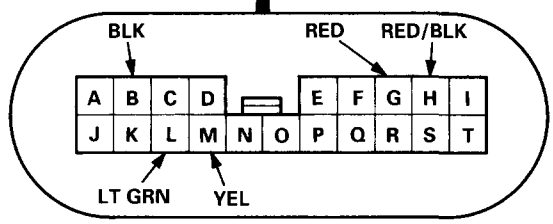

View from wire side

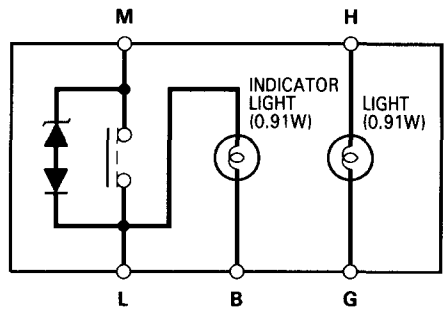

SET/RESUME Switch Test

CAUTION: Before disconnecting any part of an SRS wire harness, connect the short connectors (see section 24).

1. Disconnect the cable reel harness and main harness 6P connector. Connect test harness C only to the cable reel harness side of the 6P connector.

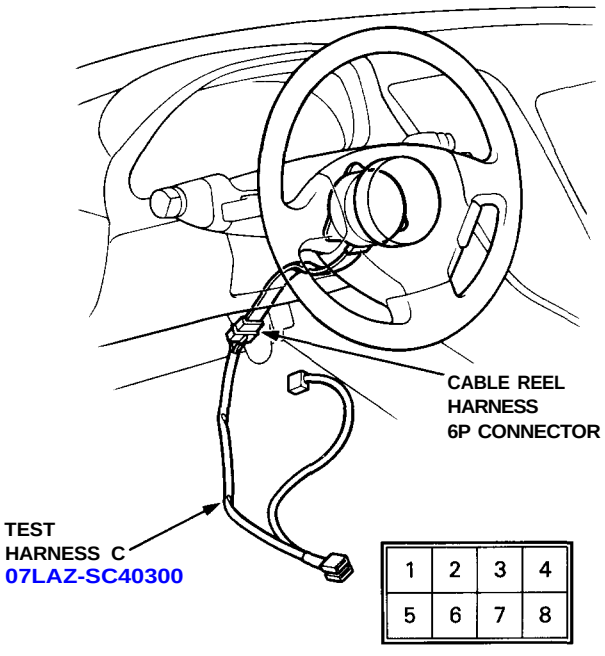

2. Check for continuity between the terminals in each switch position according to the table.

Terminal / Position	3	2	1
SET(Pushed)	○	○	
RESUME (Pushed)	○		○

- If there is no continuity, check the cable reel.
- If OK, go to step 3.

3. Remove the switch cover from the SET/RESUME switch, then remove the SET/RESUME switch by removing the two screws.

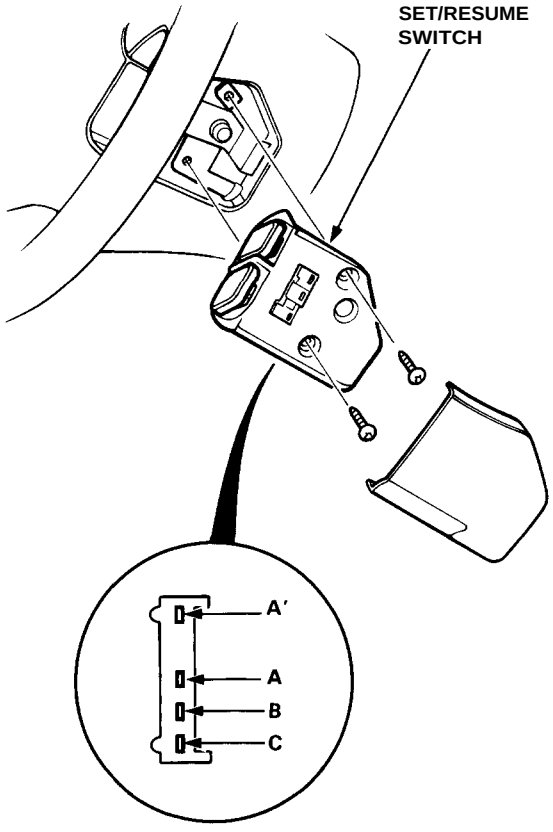

4. Check for continuity between the terminals in each switch position according to the tables.

Terminal / Position	A or A'	B	C
SET (Pushed)	○	○	
RESUME (Pushed)	○		○

If there is no continuity, replace the switch.

Brake Switch Test

1. Disconnect the 4P connector from the switch.

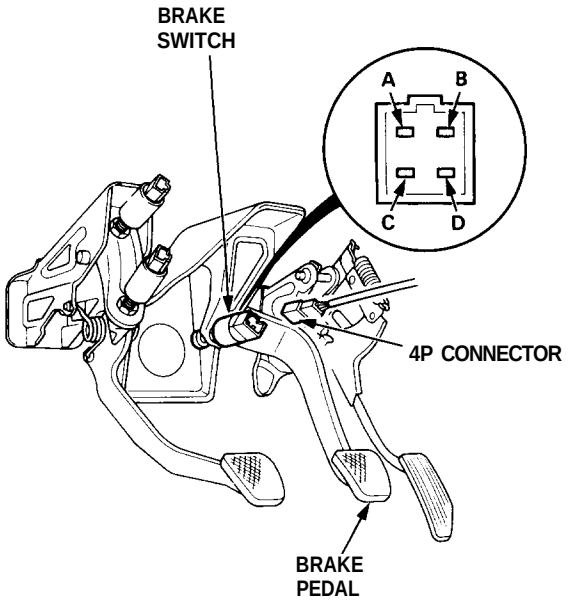

2. Check for continuity between the terminals according to the table.

Terminal / Brake pedal	A	B	C	D
RELEASED	○			○
PUSHED		○	○	

3. If necessary, replace the switch or adjust pedal height (see section 19).

Clutch Switch Test

1. Disconnect the 3P connector from the switch.

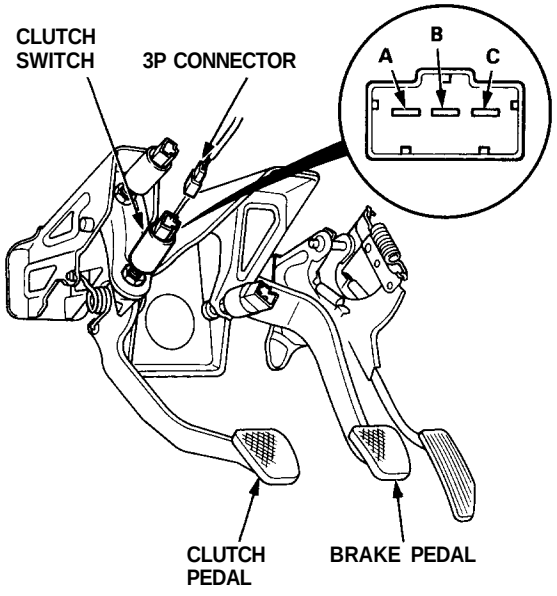

2. Check for continuity between the terminals according to the table.

Terminal / Clutch pedal	B	C
RELEASED	○	○
PUSHED		

3. If necessary, replace the switch or adjust pedal height (see section 12).

A/T Gear Position Switch Test

1. Remove the front console, then disconnect the 12P connector from the A/T gear position switch.

2. Check for continuity between the terminals in each switch position according to the table.

   - Move the lever back and forth at each position without touching the push button, and check for continuity within the range of free play of the shift lever.

   - If there is no continuity within the range of free play, adjust the position of the A/T gear position switch (see page 23-162).

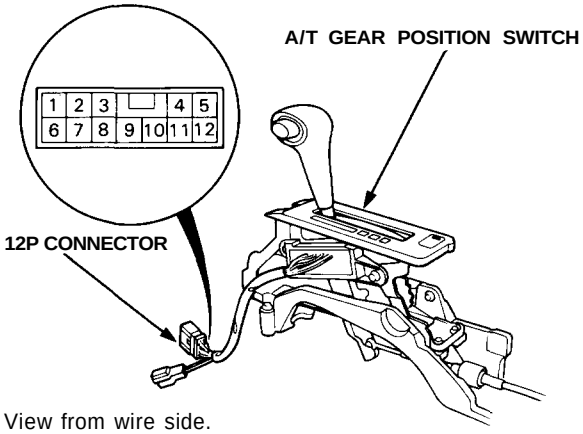

View from wire side.

A/T Gear Position Switch (For cruise control)

Terminal / Position	5	8
1		
2	○	○
3/M	○	○
D	○	○
N		
R		
P		

Security Alarm System

Component Location Index

SRS components are located in this area. Review the SRS component locations, precautions, and procedures in the SRS section 24 before performing repairs or service.

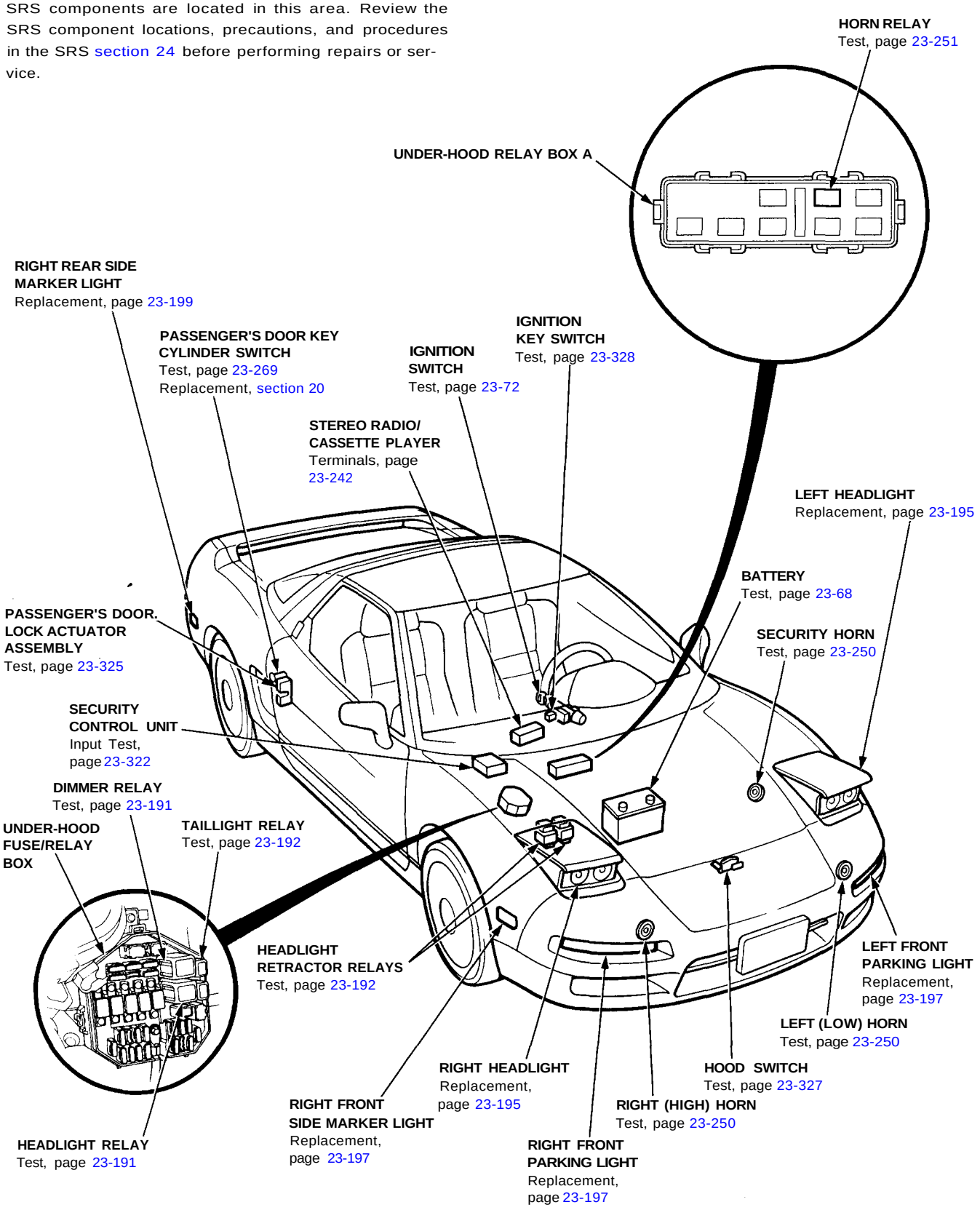

'M: NSX-T (open top)

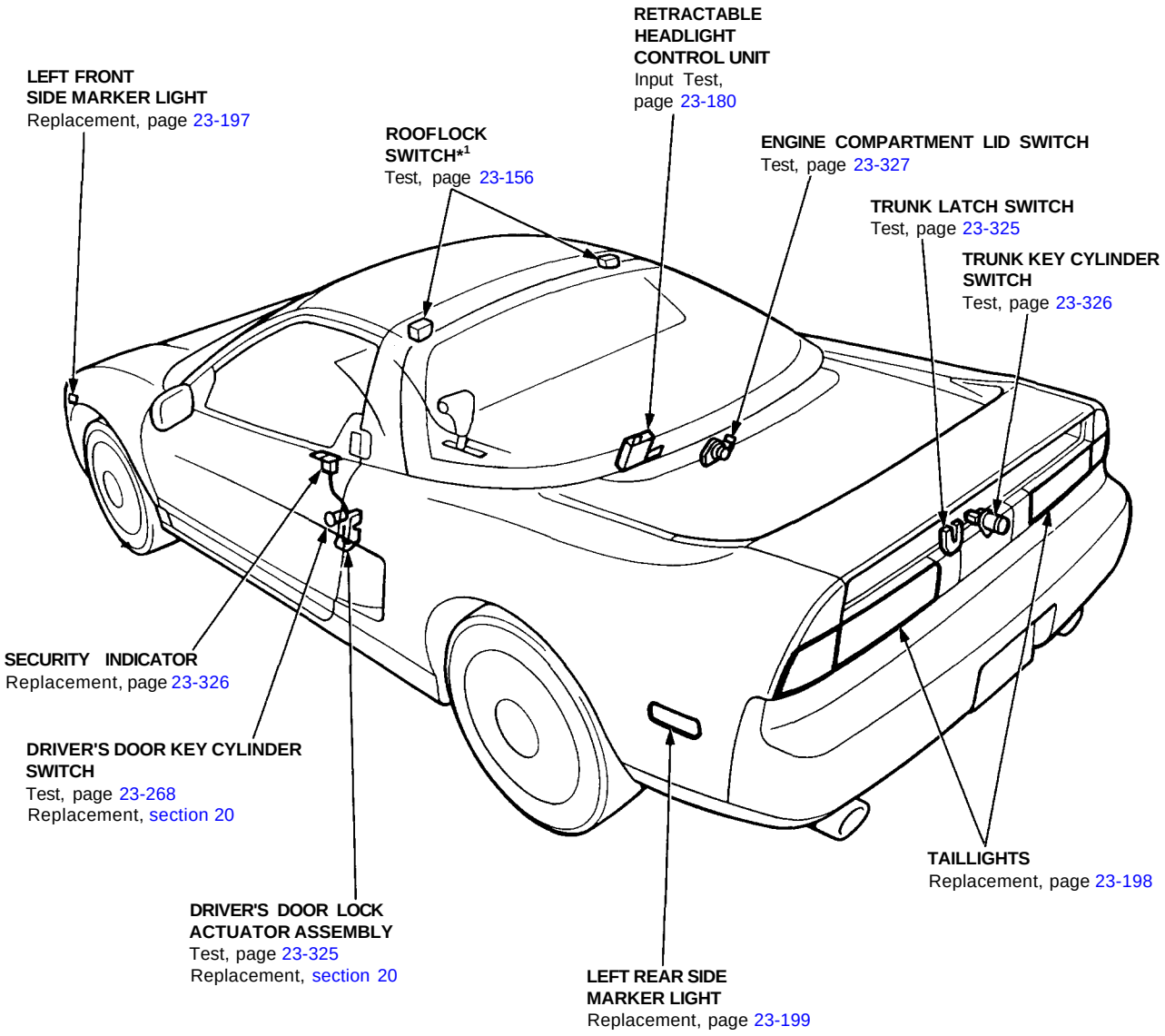

Security Alarm System

Description

This system is activated automatically 15 seconds after everything has been closed and locked. The security alarm system indicator light located on the driver's door panel will flash after the doors are properly locked.
If any of the following conditions occur, the horns will sound, the headlights will pop up and flash, and the side marker lights, parking lights and taillights will flash for about two minutes, or until the system is disarmed by unlocking either door from the outside with the key.

① Door is opened forcibly.
② Engine compartment lid is opened.
③ Trunk lid is opened without using the key.
④ Hood is opened.
⑤ Roof is unlatched (NSX-T "open top").
⑥ Battery terminal(s) is (are) removed and reconnected.
⑦ Battery circuit are bypassed by breaking the ignition switch.
⑧ Hood/engine compartment lid/trunk lid opener or roof release lever (NSX-T "open top") in the vehicle is operated.

Flowchart of the security alarm system operation:

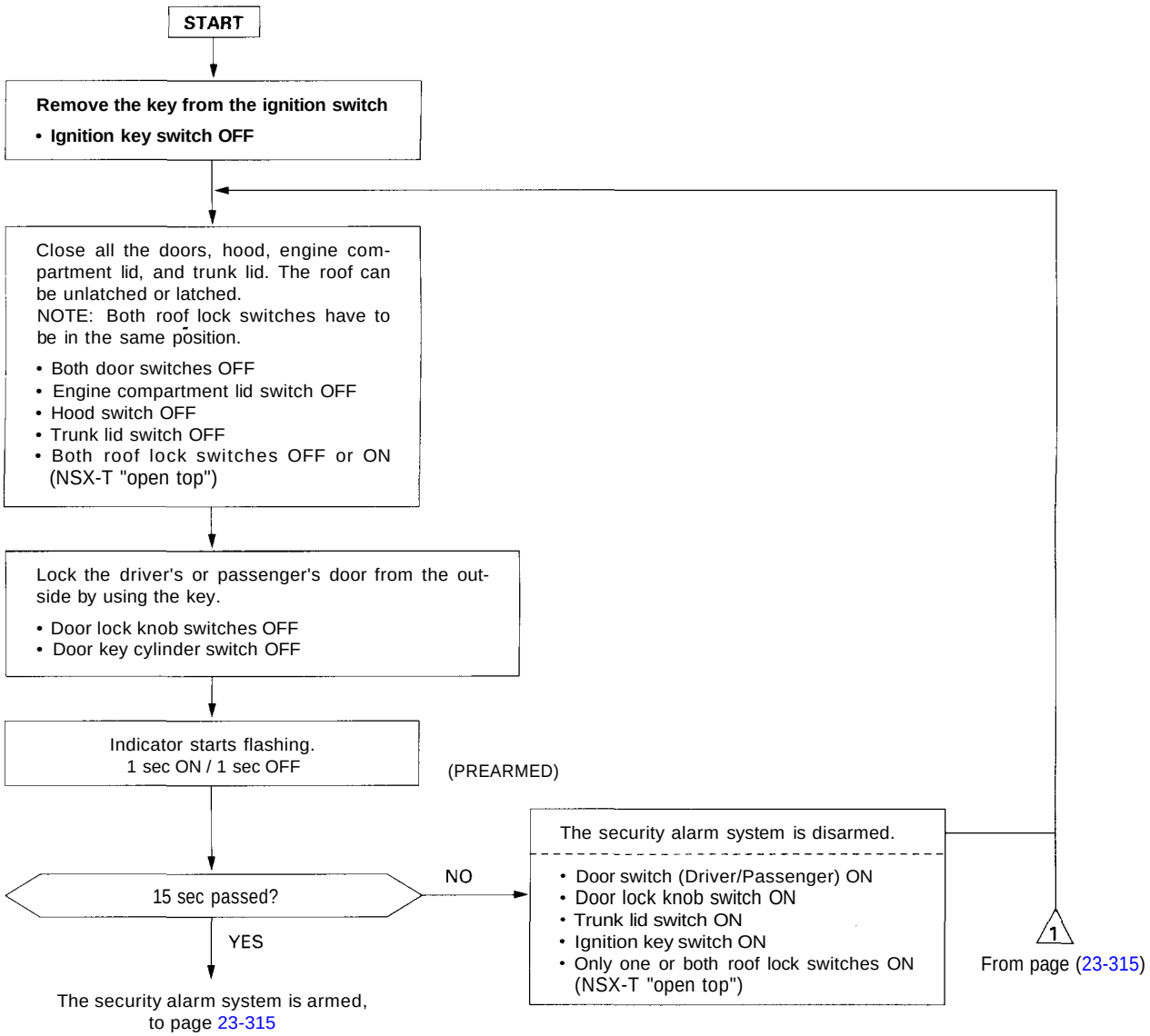

From page 23-314

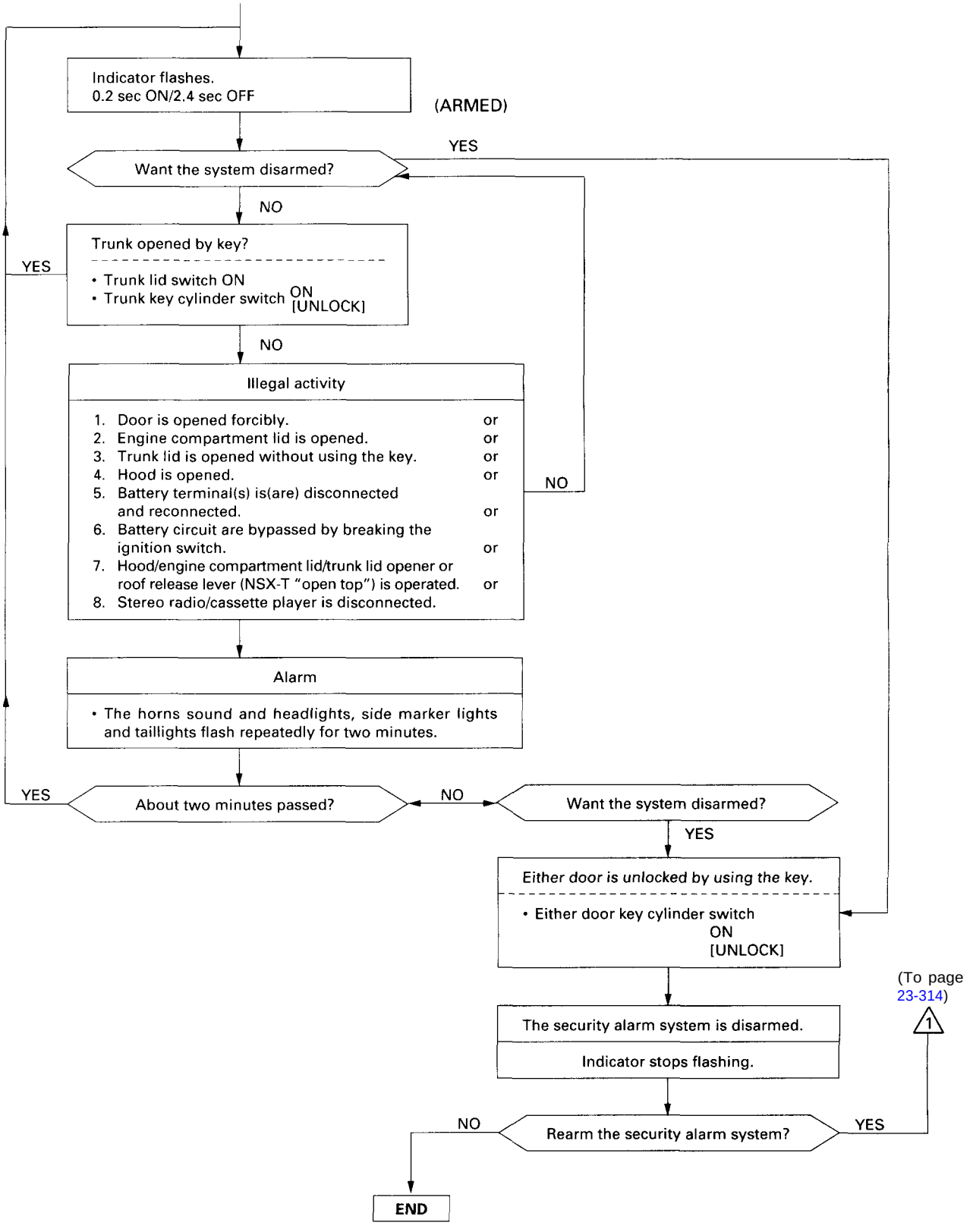

Security Alarm System

Wiring Connections

"1: NSX-T (open top)

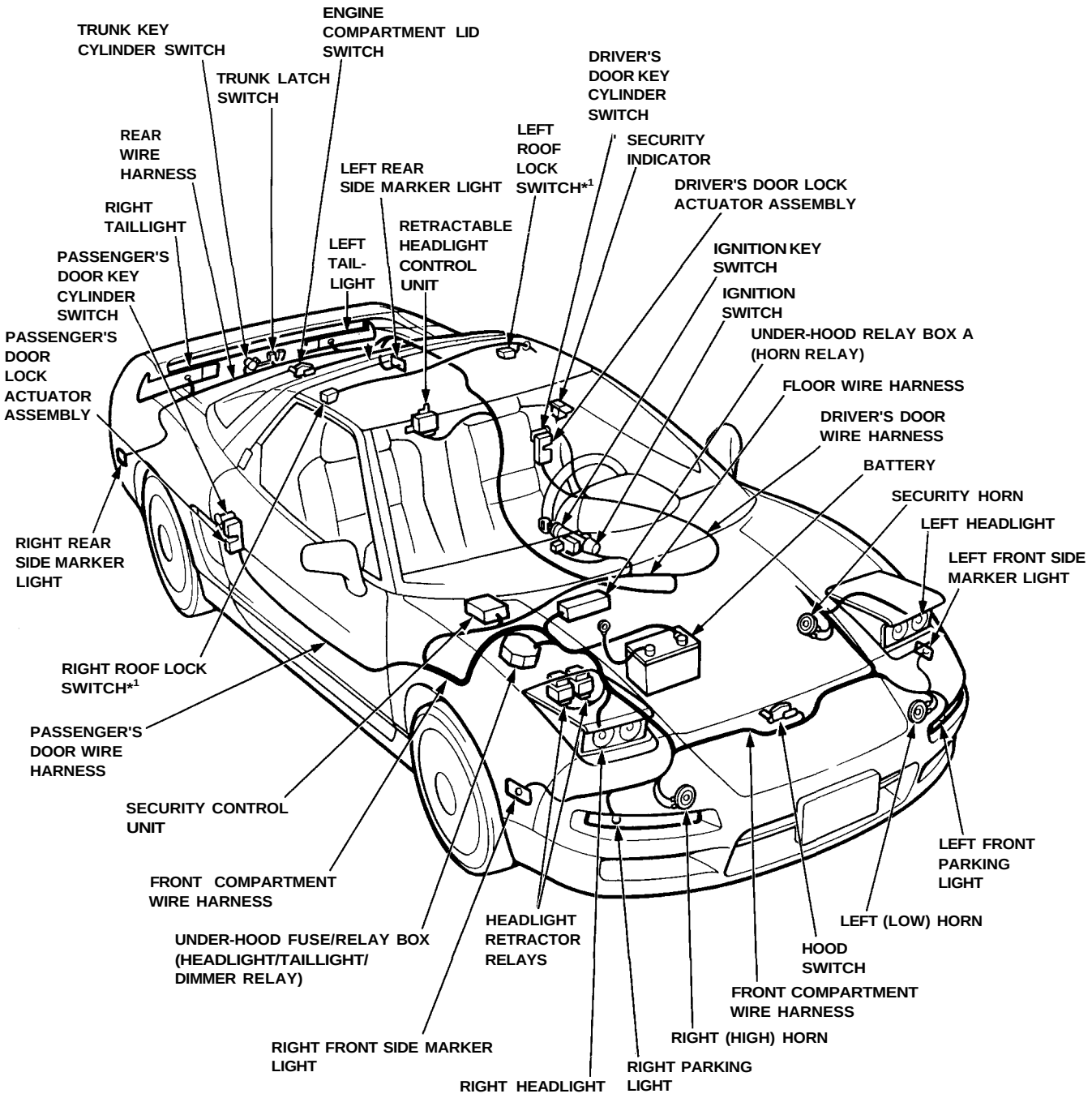

Troubleshooting

NOTE: The numbers in the table show the troubleshooting sequence.

Symptom \ Item to be inspected		In the engine compartment fuse/relay box: Blown No. 18 (20 A) fuse	In the engine compartment fuse/relay box: Blown No. 5 (15 A) fuse	In the under-hood fuse/relay box: Blown No. 45 (20 A) fuse	Faulty indicator light (LED)	Horn circuit	Lighting system	Door key switch	Ignition key switch	Trunk key switch	Trunk latch switch	Hood switch	Engine compartment lid switch	Door switch	Roof lock switches*1	Control unit input	Poor ground	
Security alarm can't be set (indicator light does not flash).		1	2	3	4				5								G401 G402 G403 G404	YEL/BLU, YEL, WHT/GRN, GRN or BLU/GRN
Security alarm can be set, but alarm does not work when the trunk, hood or either door is unlocked without the key.	Horn alarm			1		2										3		WHT/GRN, ORN/BLK, YEL/GRN[1] or LT GRN/WHT
	Headlight alarm						1									2		LT GRN/RED, BLU/RED[1] or RED/YEL
	Both alarms															1		
Alarm not canceled when the door is unlocked with the key.								1								2	G401 G402 G403 G404	GRN/YEL[1], GRN/YEL[2], BLU/RED[2] or BLU/RED[3]
Alarm not canceled when the key is inserted in the ignition switch.			1						2							3		YEL
Alarm not canceled when the trunk lid is opened with the key.										1	2					3	G551	BRN/WHT or WHT
Alarm does not work when the hood is opened.												1				2	G301	YEL/GRN[2]
Alarm does not work when the engine compartment lid is opened.													1			2	G401 G402 G403	BLU
Alarm does not work when the doors are opened.														1		2	G401 G402 G403	GRN/BLU or GRN/RED
Alarm does not work when the roof is unlatched*1.															1	2	G401 G402 G403	RED/GRN or RED/YEL

*1: NSX-T (open top)

Control Unit Input Test

Remove the glove box, and disconnect the 22P connector and 16P connector from the control unit.

Inspect the connector and socket terminals to be sure they are all making good contact.

- If the terminals are bent, loose, or corroded, repair them as necessary, and recheck the system.
- If the terminals look OK, make the following input tests at the connector.
  - — If any test indicates a problem, find and correct the cause, then recheck the system.
  - — If all the input tests prove OK, the control unit must be faulty; replace it.
- Different wires with the same color have been given a number suffix to distinguish them (for example, YEL/GRN[1] and YEL/GRN[2] are not the same).

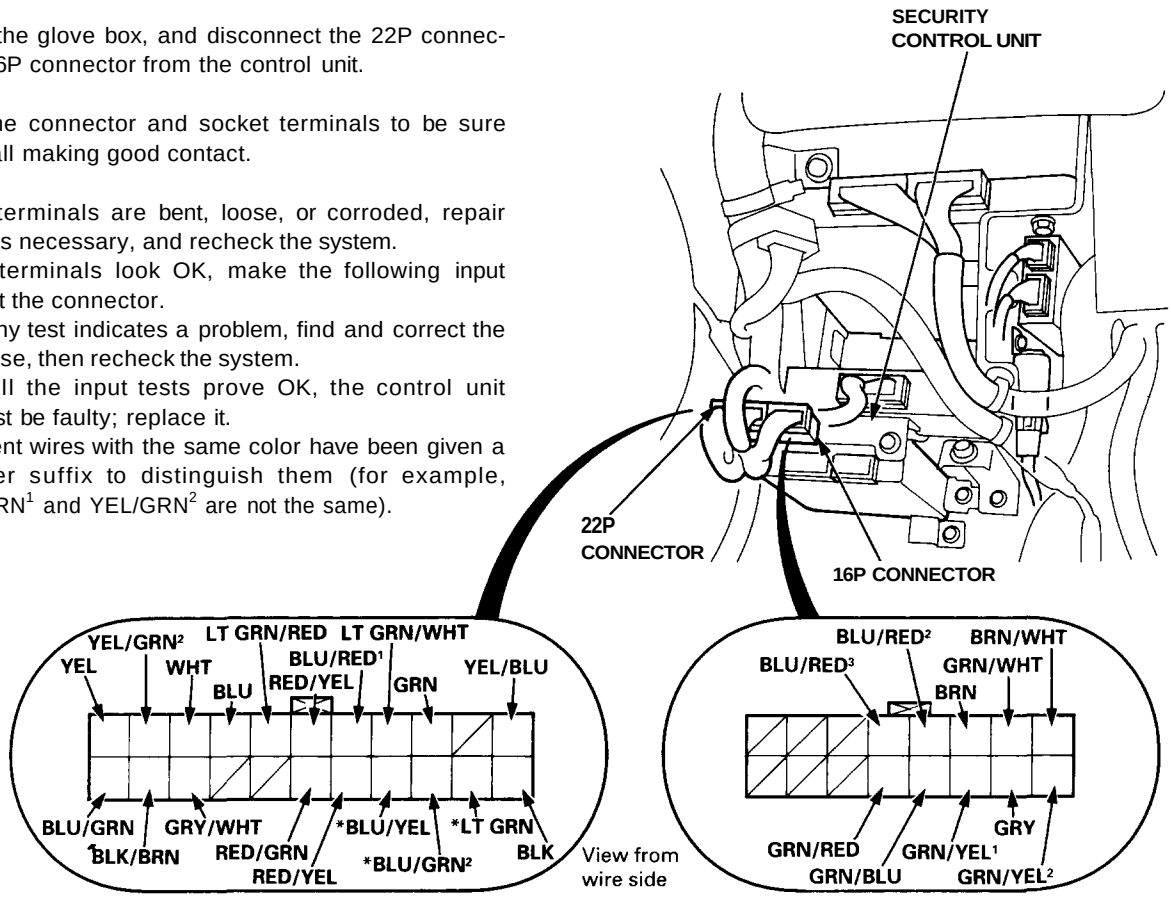

*: Not used

Wire	Test condition	Test: Desired result	Possible cause if result is not obtained
BLK	Under all conditions	Check for continuity to ground: There should be continuity.	• Poor ground (G401, G402, G403) • An open in the wire
YEL/BLU	Under all conditions	Check for voltage to ground: There should be battery voltage.	• Blown No. 18 (20 A) fuse • An open in the wire
GRN	Under all conditions	Connect to ground: The security indicator should come on.	• Blown No. 45 (20 A) fuse • Faulty security indicator • An open in the wire
YEL	Ignition switch ON (II)	Check for voltage to ground: There should be battery voltage.	• Blown No. 5 (15 A) fuse • An open in the wire

Wire	Test condition	Test: Desired result	Possible cause if result is not obtained
LT GRN/ WHT	Under all conditions	Attach to ground: All horns should sound.	• Blown No. 45 (20 A) fuse • Faulty horn relay • Faulty horn (either) • Poor ground (G301 or G302) • An open in the wire
BLU/RED	Under all conditions	Attach to ground: The headlights should come on.	• Faulty headlight relay • Faulty headlight system • An open in the wire
RED/YEL	Under all conditions	Connect to ground: The taillights should come on.	• Faulty taillight relay • Faulty taillight system • An open in the wire
LTGRN/ RED	Passing switch ON	Check for voltage to ground: There should be battery voltage.	• Faulty passing switch • Faulty dimmer relay • Faulty headlight relay • An open in the wire
YEL/GRN[2]	Hood open	Check for continuity to ground: There should be continuity.	• Faulty hood switch • Misadjusted hood switch • Poor ground (G301) • An open in the wire
	Hood closed	Check for continuity to ground: There should be no continuity.	
BLU/GRN	Ignition key is in the ignition switch.	Check for continuity to ground: There should be continuity.	• Faulty ignition key switch • Poor ground (G401, G402, G403) • An open in the wire
	Ignition key is not in the ignition switch.	Check for continuity to ground: There should be no continuity.	
BLU	Engine compartment lid open	Check for continuity to ground: There should be continuity.	• Faulty engine compartment lid switch • Misadjusted engine compartment lid switch • Poor ground (G401, G402, G403) • An open in the wire
	Engine compartment lid closed	Check for continuity to ground: There should be no continuity.	
BLK/BRN or BLK/ LT GRN	Under all conditions	Check for continuity to ground: There should be continuity.	• Poor ground (G404) • An open in the wire
BRN/WHT	Trunk key in UNLOCK	Check for continuity to ground: There should be continuity.	• Faulty trunk key • Poor ground (G551) • An open in the wire
WHT	Trunk lid open	Check for continuity to ground: There should be continuity.	* Faulty trunk latch switch • Misadjusted trunk latch switch • Poor ground (G551) • An open in the wire
	Trunk lid closed	Check for continuity to ground: There should be no continuity.	

(cont'd)

Security Alarm System

Control Unit Input Test (cont'd)

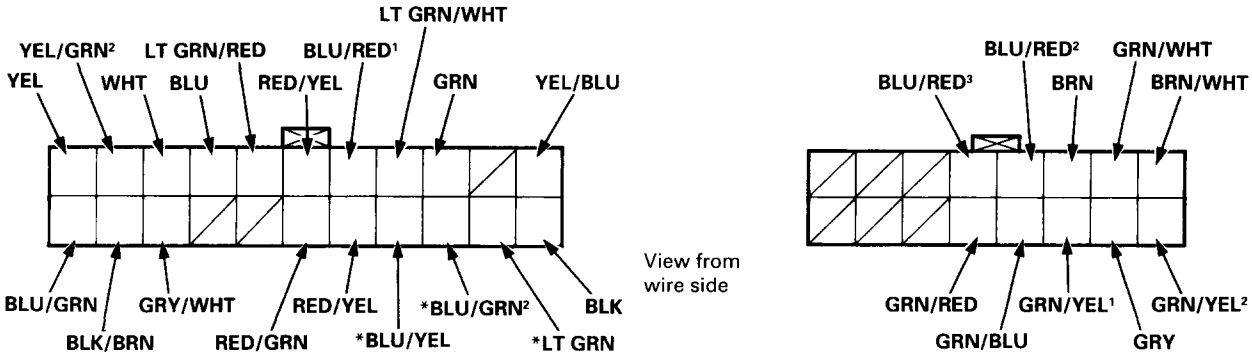

*: Not used

Wire	Test condition	Test: Desired result	Possible cause if result is not obtained
GRN/BLU	Driver's door open	Check for continuity to ground: When the door is open, there should be continuity. When the door is closed, there should be no continuity.	• Faulty right door switch • An open in the wire
	Driver's door closed		
GRN/RED	Passenger's door open		
	Passenger's door closed		
GRN/YEL[1]	Driver's door key in UNLOCK	Check for continuity to ground: There should be continuity.	• Faulty left or right door key switch • Poor ground (G401, G402, G403) • An open in the wire
GRN/YEL[2]	Passenger's door key in UNLOCK		
GRN/WHT	Driver's door key in LOCK	Check for continuity to ground: There should be continuity, as the door keylock is turned to LOCK.	• Faulty left or right door key switch • Poor ground (G401, G402, G403) • An open in the wire
GRY/WHT	Passenger's door key in LOCK		
BLU/RED[2]	Driver's door lock knob in UNLOCK	Check for continuity to ground: There should be continuity.	• Faulty left door lock knob switch (Built into the actuator) • Poor ground (G401, G402, G403) • An open in the wire
BLU/RED[3]	Passenger's door lock knob in UNLOCK	Check for continuity to ground: There should be continuity.	• Faulty right door lock knob switch (Built into the actuator) • Poor ground (G401, G402, G403) • An open in the wire
RED/GRN[1]¹	Roof unlatched	Check for continuity to ground: There should be continuity.	• Faulty right or left roof lock switch • Poor ground (G401, G402, G403) • An open in the wire
RED/YEL*[1]			

¹M: NSX-T (open top)

Trunk Latch Switch Test

1. Open the trunk lid, and remove the trunk rear trim panel.
2. Disconnect the 3P connector from the trunk latch.

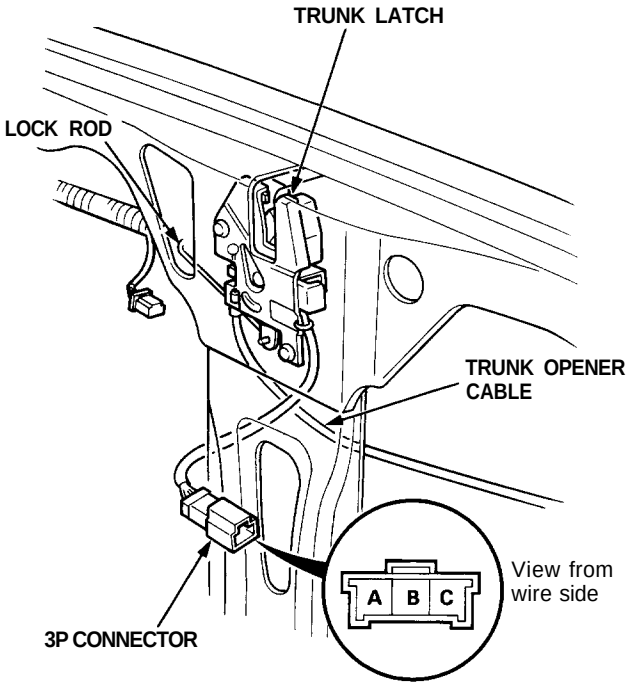

3. Check continuity at the trunk latch connector terminals.
   - There should be continuity between the B and C terminals with the trunk lid open.
   - There should be no continuity between the B and C terminals with the trunk latch in LOCK (trunk lid closed) position.

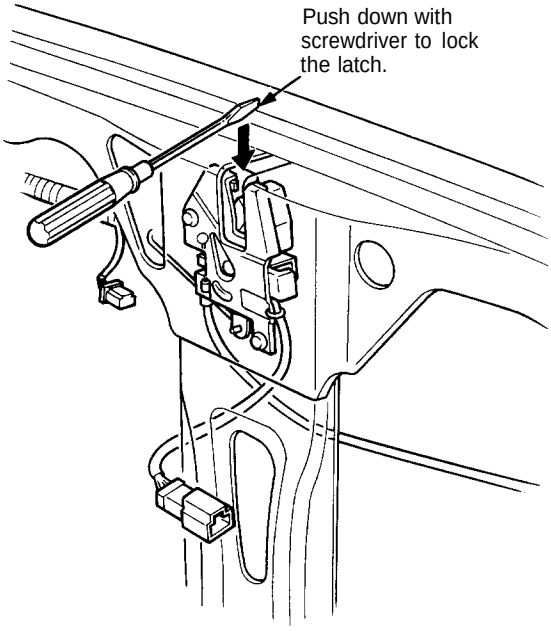

Door Switch Test

1. Remove the door panel (see section 20).
2. Disconnect the 2P connector from the door lock actuator assembly.

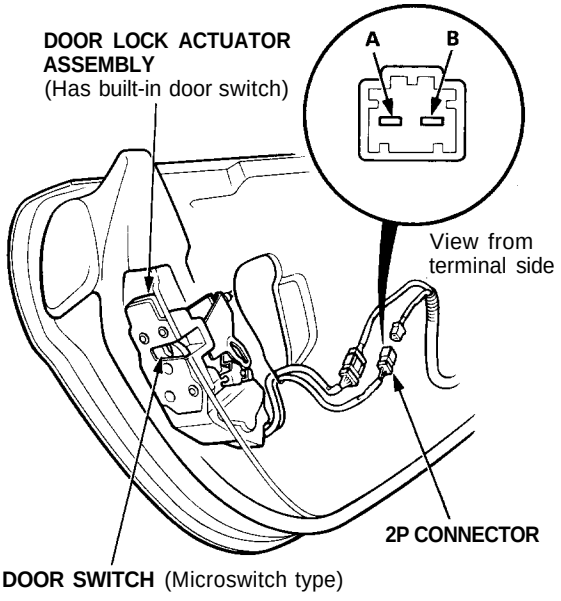

3. Check continuity at the door switch connector terminals.
   - There should be continuity between the A terminal and B terminal with the door open.
   - There should be no continuity between the A and B terminals with the switch pushed (door closed).

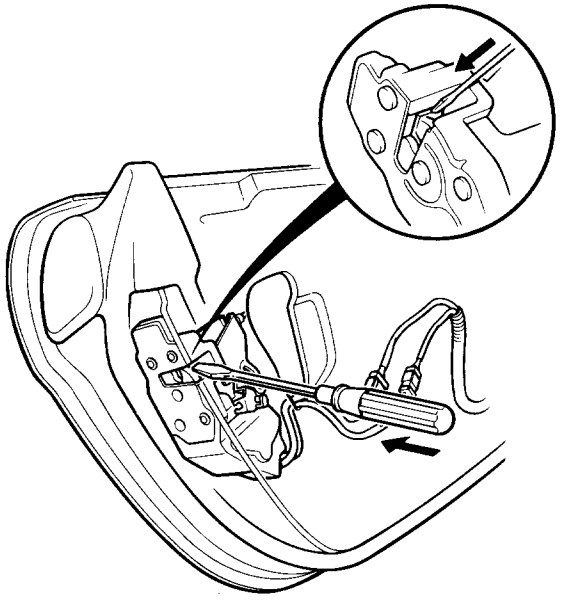

Security Alarm System

Indicator Replacement

1. Remove the door panel (see section 20).
2. Remove the two screws from the indicator.
3. Remove the indicator from the door panel.

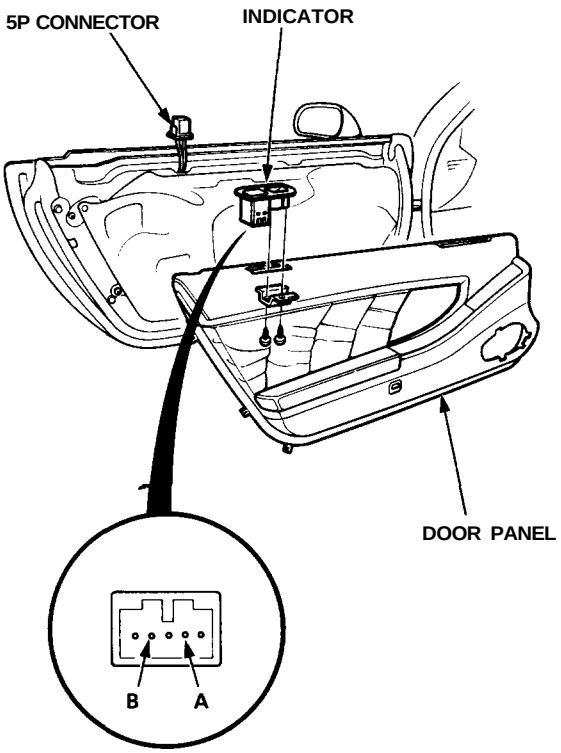

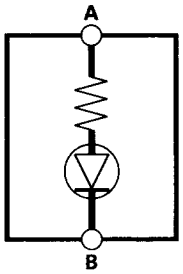

Trunk Key Cylinder Switch Test

1. Open the trunk lid, and remove the trunk rear panel.
2. Disconnect the 2P connector from the trunk key cylinder switch.
3. Check continuity at the switch connector terminals.
   - There should be continuity between the terminals when the trunk lock is turned to UNLOCK with the key.
   - There should be no continuity when the lock is released.

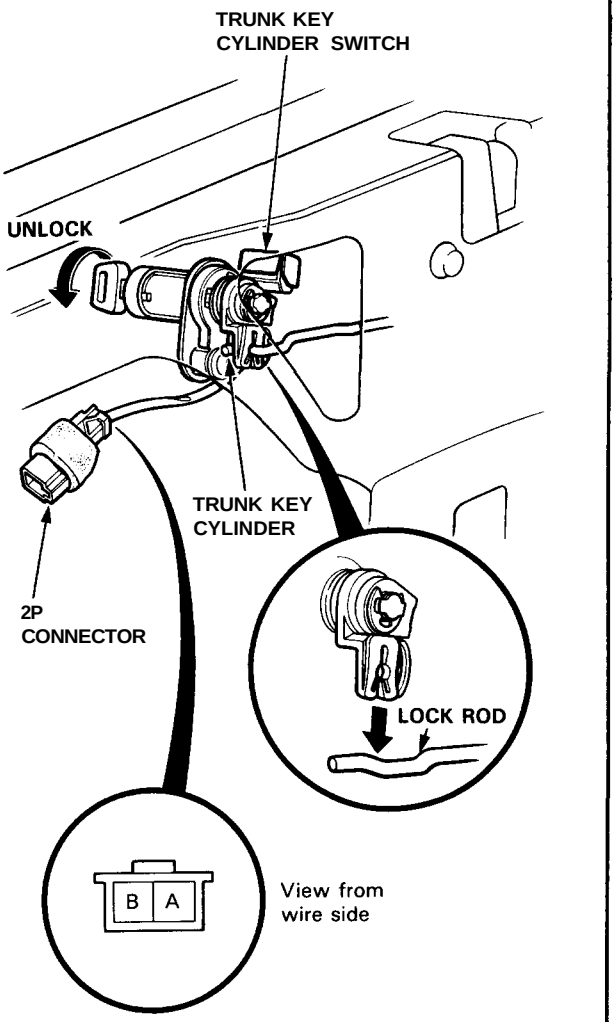

Engine Compartment Lid Switch Test

1. Open the engine compartment lid.
2. Disconnect the 2P connector from the engine compartment lid switch.
3. Check continuity at the switch connector terminals.
   - There should be continuity between the terminals with the lever released (lid open).
   - There should be no continuity with the lever pushed down (lid closed).

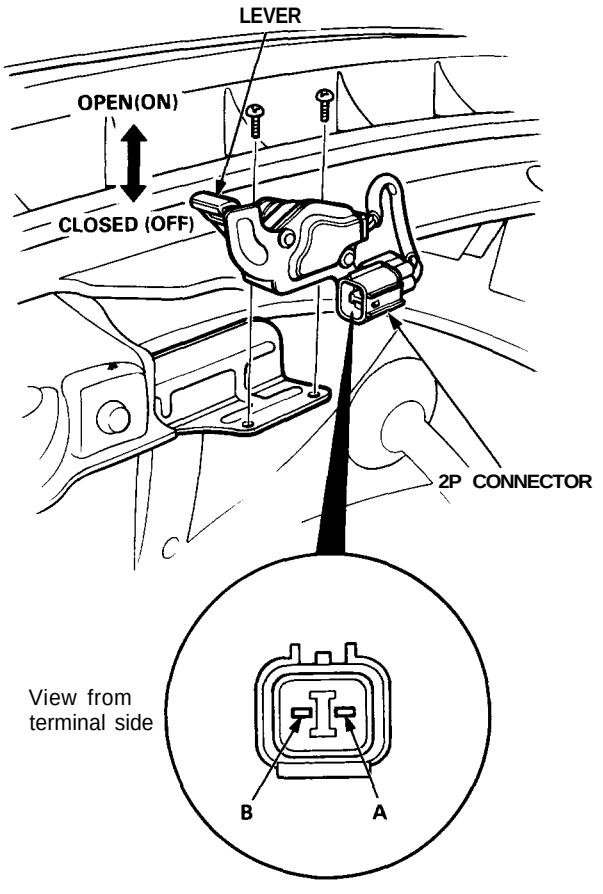

Hood Switch Test

1. Open the hood.
2. Disconnect the 2P connector from the hood switch.
3. Check continuity at switch connector terminals.
   - There should be continuity between the terminals with the lever released (hood open).
   - There should be no continuity with the lever pushed down (hood closed).

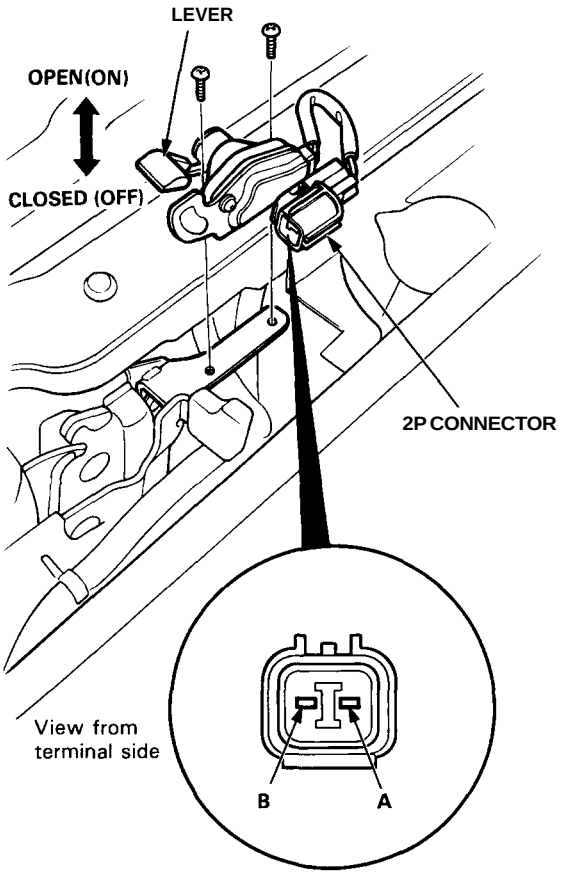

Ignition Key Switch Test

SRS components are located in this area. Review the SRS component locations, precautions, and procedures in the SRS section 24 before performing repairs or service.

1. Remove the dashboard lower cover, and disconnect the connectors.

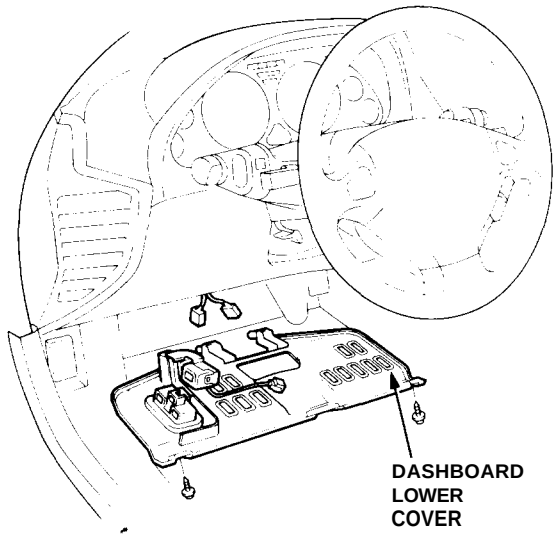

2. Disconnect the 8P connector from the floor wire harness.

3. Check continuity at the switch connector terminals.

   - There should be continuity between the No. 8 and No. 7 terminals with the ignition key inserted into the ignition key cylinder.
   - There should be no continuity between terminals No. 8 and No. 7 with the ignition key removed.

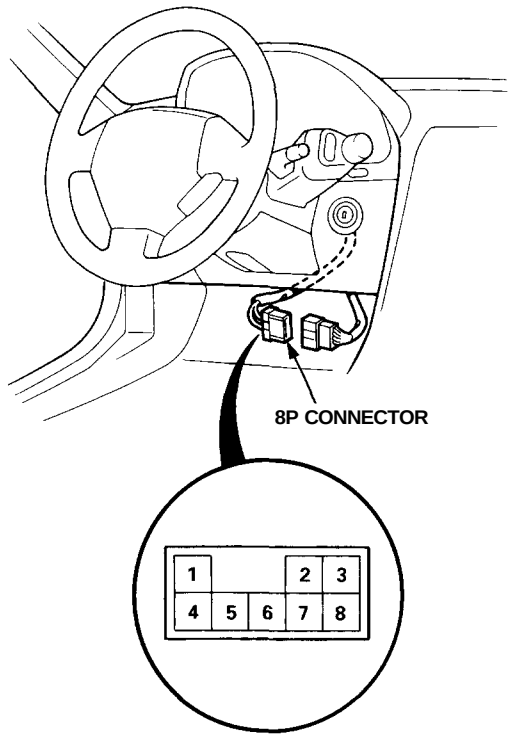

View from wire side

Immobilizer System

Component Location Index

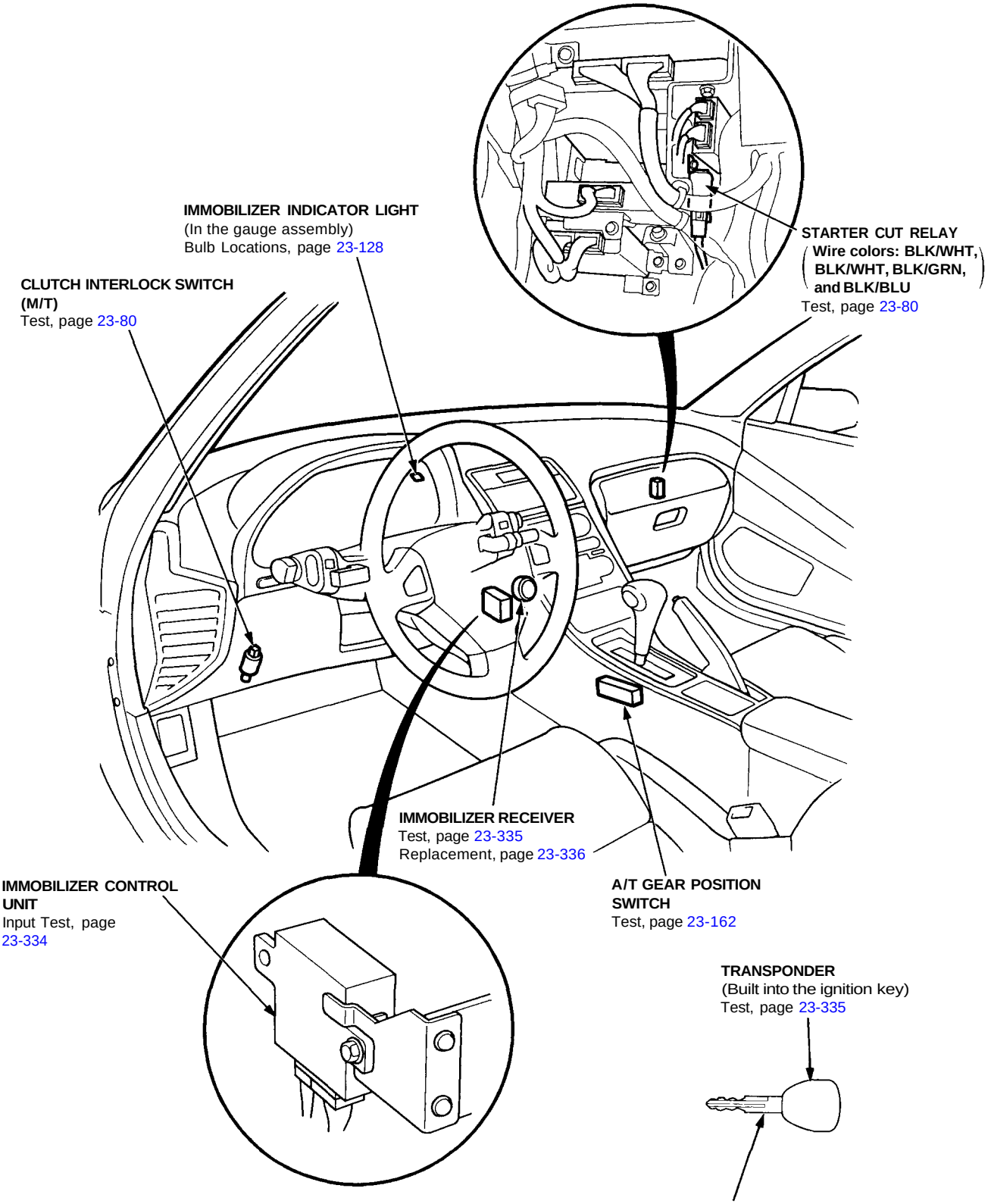

Immobilizer System

Description

The vehicle is equipped with an immobilizer system that will disable the vehicle unless the proper ignition key is used.
This system consists of a transponder located in the ignition key, a receiver, a control unit, an indicator light, and the ECM.

The vehicle has two kinds of keys.

- The master key is for:
  — ignition switch.
  — door locks.
  — trunk lock.
  — glove box lock.

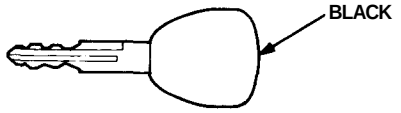

- The valet key is for:
  — ignition switch.
  — door locks.

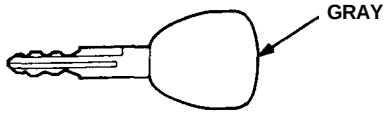

- The learning key is for rewriting the immobilizer system.
  NOTE: This key cannot start the engine; do not use it except for rewriting the system. If someone tries to start the engine with the learning key, all master and valet keys must be relearned.

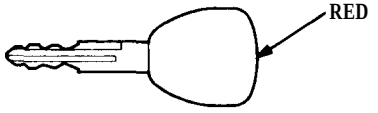

When the key is inserted in the ignition and turned to the (II) position, the immobilizer control unit sends power to the transponder through the receiver.
The transponder then sends a coded signal back through the receiver to the control unit.
The control unit in turn signals the ECM, as well as the starter cut relay.

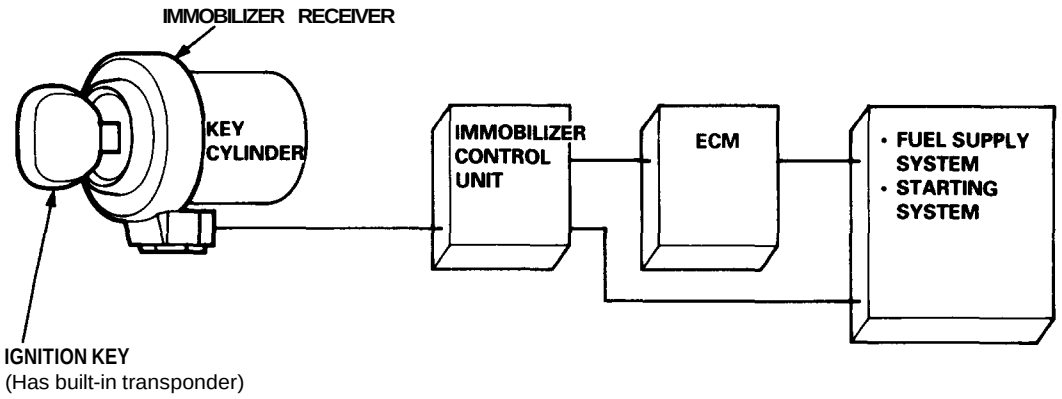

- If the proper key has been used, the starter cut relay will be energized, and the ECM will energize the fuel supply system. The immobilizer indicator light in the gauge assembly will simultaneously come on for about two seconds, then go off, thereby signaling that the immobilizer unit has recognized the code sent by the transponder.
- If a key has been used whose code was not received or recognized by the unit, or which was not approved by Acura, the indicator light will come on for about two seconds, then it will blink continuously.
- If the ignition switch is turned OFF, the indicator will blink for about five seconds to signal that the unit has been set correctly, then the indicator will go off.

IMMOBILIZER INDICATOR LIGHT BLINKING PATTERN:

IGNITION SWITCH		
PROPER KEY INSERTED	INDICATOR LIGHT	
WRONG KEY INSERTED	INDICATOR LIGHT	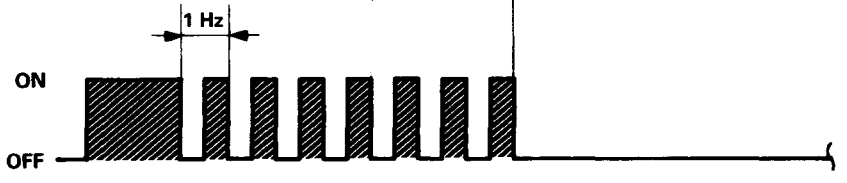

Immobilizer System

Problems and Replacement Parts

Problem	Parts set	PCM-Tester required?
① Master or valet key has been lost or additional master or valet key is required.	A	YES
② All master and valet keys have been lost.	A x 2, and B	YES
③ Learning key has been lost.	B	YES
④ Immobilizer receiver does not work.	C	NO
⑤ Immobilizer control unit does not work.	B	YES
⑥ ECM does not work.	E	YES
⑦ Ignition switch does not work.	D	YES
⑧ Door key cylinder has been broken.	F(G)	NO (YES)

Parts Set:

A: Blank key

B: Immobilizer control unit
Master key
Learning key

C: Immobilizer receiver

D: Ignition switch with immobilizer receiver
Immobilizer control unit
Master key
Learning key

E: ECM

F: Door key cylinder
Master keys for doors open or locked

G: Ignition switch with immobilizer receiver
Immobilizer control unit
Master key
Learning key
Door key cylinders
Trunk key cylinder
Glove box key cylinder

NOTE:
- The immobilizer system can store up to five key codes.
- If it is necessary to rewrite the immobilizer control unit to learn a new key, the dealer needs the customer's vehicle, all its master keys and valet keys, its learning key, and the Honda PGM Tester equipped with an immobilizer program card. Any key that is not learned during rewriting will no longer start the engine.
- If the customer has lost his key, and cannot start the engine, contact Acura Customer Relations or Roadside Assistance.

Before Testing:

- Due to the action of the immobilizer system, the engine takes slightly more time to start than the engine of a vehicle without an immobilizer system.
- When the system is normal, and the proper key is inserted, the indicator light comes on for two seconds, then it will go off.
- If the indicator starts to blink after two seconds, or if the engine does not start, repeat the starting procedure.
  — If the engine still does not start, perform the immobilizer control unit input test and transponder and immobilizer receivertest.
- If all the input tests and transponder and immobilizer receiver test prove OK, check the ECM (see section 11).
  — If the ECM is OK, the immobilizer control unit must be faulty; replace the immobilizer control unit, master key and learning key together, and then rewrite the ECM with the Honda PGM Tester.
  — If the ECM is faulty, substitute a known-good ECM, and recheck. However, since the known-good ECM has a different code stored into it, it must be rewritten with the Honda PGM Tester. Otherwise, the engine will not start.

Immobilizer System

Control Unit Input Test

1. Remove the dashboard lower cover and dashboard lower pad (see page 23-73).
2. Remove the dashboard brace (see page 23-73).
3. Disconnect the 8P connector "A" from the immobilizer control unit.
4. Inspect the connector and socket terminals to be sure they are all making good contact.
   - If the terminals are bent, loose, or corroded, repair them as necessary, and recheck the system.
   - If the terminals look OK, make the following input tests at the connector.
     - — If any test indicates a problem, find and correct the cause, then recheck the system.
     - — If all the input tests prove OK, check the immobilizer receiver and transponder.

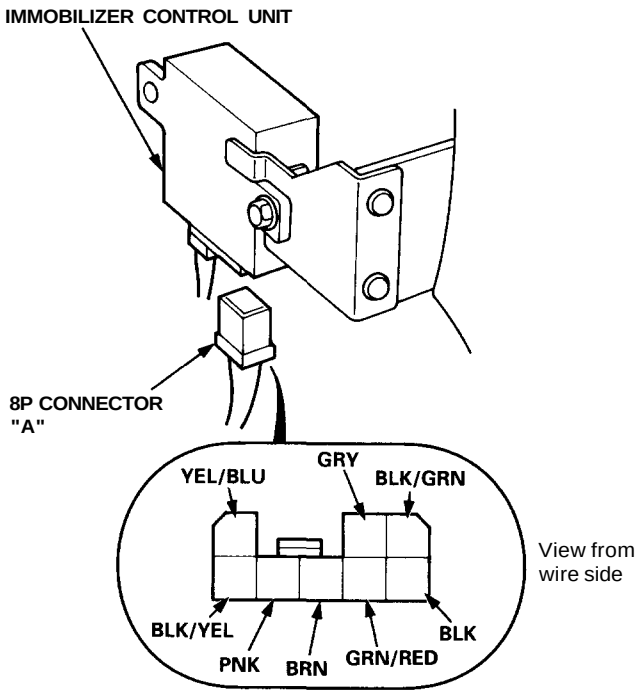

Wire	Test condition	Test: Desired results	Possible cause if result is not obtained
YEL/BLU	Under all conditions	Check for voltage to ground: There should be battery voltage.	• Blown No. 18 (20 A) fuse • An open in the wire
GRY	M/T: With clutch pedal depressed	Check for continuity to ground: There should be continuity.	• Faulty clutch interlock switch • An open in the wire
	A/T: Shift lever in P or N		• Faulty A/T gear position switch • An open in the wire
BLK/GRN	Ignition switch at START (III)	Check for voltage to ground: There should be battery voltage.	• Faulty starter cut relay • An open in the wire
BLK/YEL	Ignition switch ON (II)	Check for voltage to ground: There should be battery voltage.	• Blown No. 2 (15 A) fuse • An open in the wire
PNK	Under all conditions	Attach to ground: The immobilizer indicator light should come on.	• Blown No. 33 (7.5 A) fuse • Blown bulb • Faulty gauge circuit • An open in the wire
BRN	Under all conditions	*Check for continuity between the No. 6 terminal and ECM 26P (C484) connector No. 3 terminal. There should be continuity.	• An open in the wire
GRN/RED	Ignition switch OFF	Check for continuity to ground: There should be continuity with the parking brake lever up and no continuity with the lever down.	• Faulty parking brake switch • An open or short in the wire • Faulty brake fluid level switch
BLK	Under all conditions	Check for continuity to ground: There should be continuity.	• Poor ground (G401, G402, G403) • An open in the wire

*: Use the backprobing method explained in section 11.

Immobilizer Receiver and Transponder (Key) Test

1. Turn the ignition switch ON (II).
2. Check that the immobilizer indicator light starts blinking after two seconds.

Does the immobilizer indicator blink?

NO → **Perform the control unit input test.**

YES

Try to start the engine with another master key or valet key from this vehicle.

Does the engine start?

YES → **Replace the transponder (ignition key).**

NO

Does the engine crank?

YES → **Check for an open in the BRN wire between the immobilizer control unit and the ECM. If the wire is OK, rewrite the ECM with the PGM Tester.**

NO

Rewrite the immobilizer control unit and the ECM with the PGM Tester.

Does the engine start?

YES → **Immobilizer system is OK now.**

NO

1. Turn the ignition switch OFF.
2. Disconnect the 3P connector "B" from the immobilizer control unit.
3. Check for continuity between the B1 and B2, and the B3 and B2 terminals of the 3P connector.

Is there continuity?

YES → **Short in the shielded wires between the immobilizer receiver and the immobilizer control unit. Replace the wire harness.**

NO

Measure resistance between the B1 and B3 terminals of the 3P connector.

Is there about 15 ohms?

NO → **Faulty receiver or open in the shielded wires between the immobilizer receiver and immobilizer control unit.**

YES

Replace the immobilizer control unit.

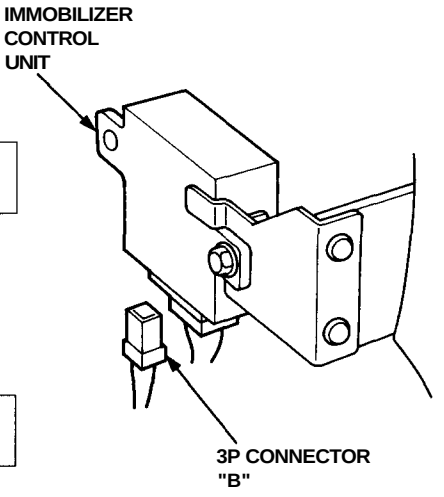

Wire side of female terminals

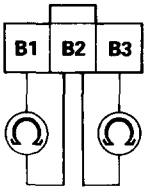

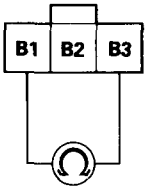

Immobilizer System

Immobilizer Receiver Replacement

1. Remove the dashboard lower cover and dashboard lower pad (see page 23-73).
2. Remove the dashboard brace (see page 23-73).
3. Disconnect the 3P connector from the immobilizer control unit. This harness is shielded and serves as a communication link; be careful not to damage it.
4. Remove the screw from the immobilizer receiver, then remove the receiver from the ignition key cylinder.

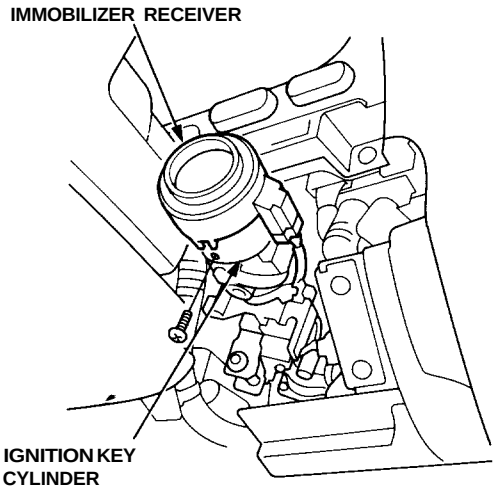

5. Install the new immobilizer receiver in the reverse order of removal.
6. After replacement, check the immobilizer system.

Supplemental Restraint System (SRS)

Special Tools 24–2
Components/Wiring Location Index 24–3
Description 24–4
Precautions/Procedures
- General Precautions 24–6
- Airbag Handling and Storage 24–6
- Seat Belt Tensioner Handling and Storage 24–7
- Steering–related Precautions 24–8
- Sensor Inspection 24–9
- Wiring Precautions 24–9
- Short Connector Installation 24–10
- Inspection After Deployment 24–12

Troubleshooting
- Self–diagnosis Function 24–13
- SRS Indicator Light Troubleshooting 24–13
- Test Harness and Attachment Points 24–14

Airbag Assembly
- Removal 24–34
- Installation 24–35
- Airbag/Seat Belt Tensioner Disposal 24–37

Cable Reel
- Removal 24–42
- Installation 24–44

Dash Sensor
- Removal 24–47
- Installation 24–48

SRS Unit
- Removal 24–49
- Installation 24–50

Seat Belt Tensioner
- Removal 24–51
- Installation 24–52

Special Tools

Ref. No.	Tool Number	Description	Qty	Page Reference
①*	07HAZ—SG00400	Deployment Tool	1	24-37
②*	07LAZ—SL40300	Test Harness C	1	24-23, 24-14
③*	07LAZ—SL40400	Test Harness D	1	24-14
④**	07MAZ—SL00500	Test Harness A	1	24-14
⑤	07MAZ—SP0020A	SRS Service Connector	1	24-10
⑥**	07MAZ—SP00500	Test Harness B	1	24-14

*: Included in SRS Tool Set 07MAZ—SG0000A
**: Included in SRS Tool Set 07MAZ—SM5000A

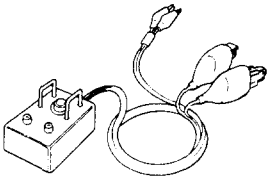

①

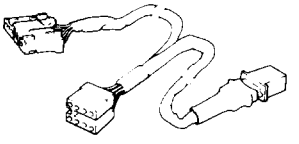

②

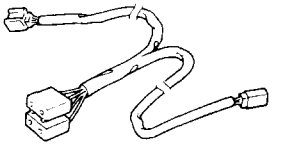

③

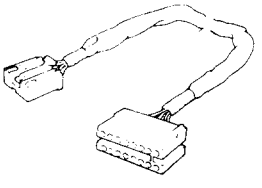

④

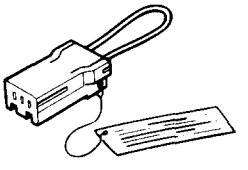

⑤

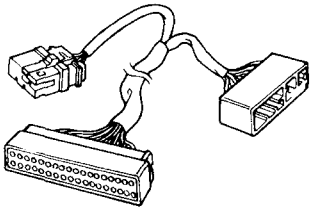

⑥

Supplemental Restraint System (SRS)

Components/Wiring Locations

CAUTION: Make sure all SRS ground locations are clean and grounds are securely attached.

NOTE:
- All SRS electrical wiring harness are covered with yellow insulation.
- Replace the entire affected SRS harness assembly if it has an open ciruit or damaged wiring.

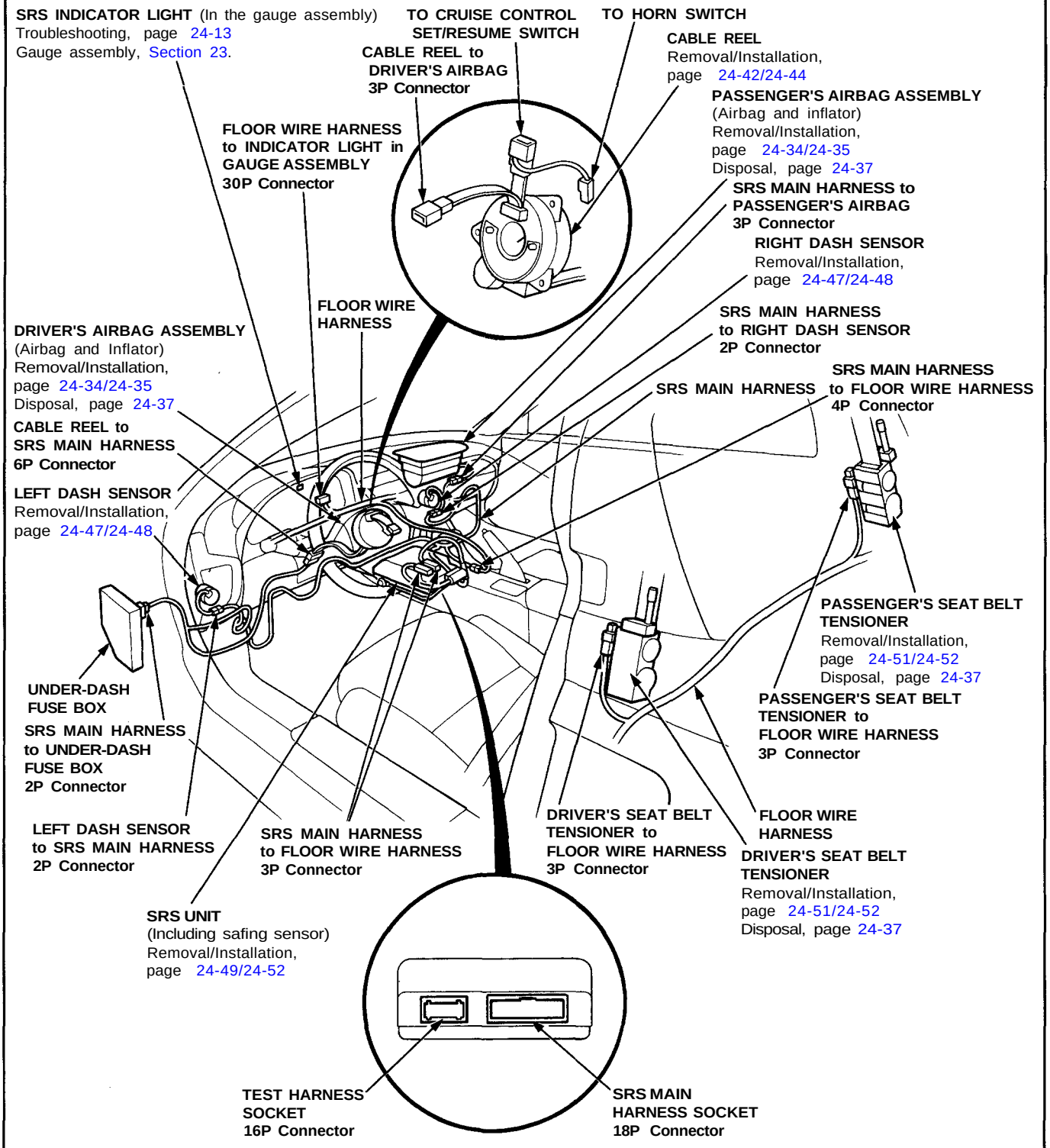

Supplemental Restraint System (SRS)

Description

SRS Airbag System

The SRS is a safety device which, when used in conjunction with the seat belts, is designed to protect the driver and passenger in a frontal impact exceeding a certain set limit.

The system is composed of left and right dash sensors, the SRS unit (includes safing sensor), the cable reel, driver's airbag, and the passenger's airbag.

Seat Belt Tensioners

The seat belt tensioners are linked with the SRS airbags to further increase the effectiveness of the seat belts. In a front-end collision, the tensioners instantly retract the belts firmly to secure the occupants in their seats.

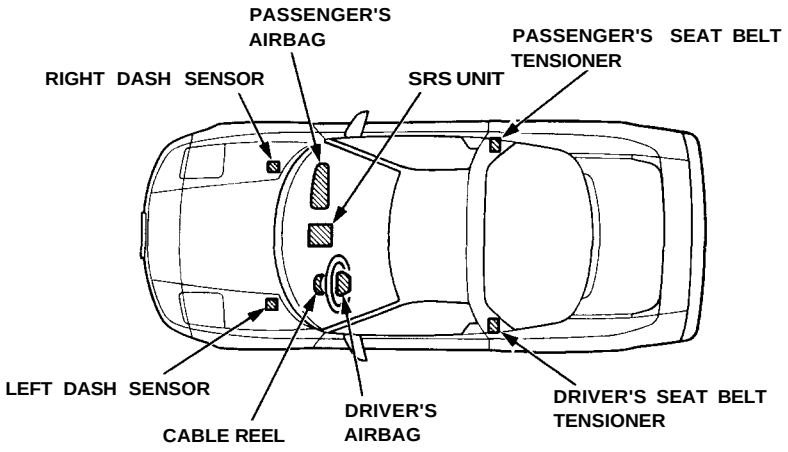

Operation

As shown in the diagram below, the left and right dash sensors are connected in parallel. The parallel set of sensors is connected in series to each airbag inflator circuit and the vehicle battery. In addition, a back-up power circuit is connected in parallel with the vehicle battery. The back-up power circuit and the safing sensor are located inside the SRS unit.

For the SRS to operate:

(1) One or both safing sensor and one or both dash sensors must activate.
(2) Electrical energy must be supplied to the airbag inflator by the battery, or the back-up power circuit if the battery voltage is too low.
(3) Airbag and seat belt tensioner charges must be released. Then the airbags will deploy and the tensioners will activate.

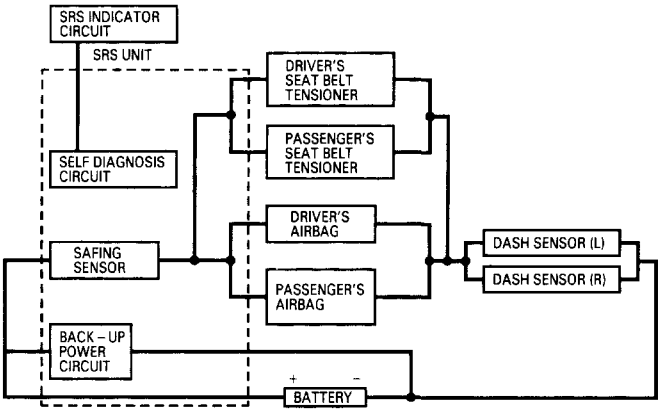

Self-diagnosis system

A self-diagnosis circuit is built into the SRS unit; when the ignition switch is turned ON (II), the SRS indicator light comes on and goes off after about six seconds if the system is operating normally. If the light does not come on, or does not go off after six seconds, or if it comes on while driving, it indicates an abnormality in the system. The system must be inspected and repaired as soon as possible.

Supplemental Restraint System (SRS)

General Precautions

- Carefully inspect any SRS part before you install it. Do not install any part that shows sings of being dropped or improperly handled, such as dents, cracks or deformation:

  — Airbag assembly (driver's and passenger's).
  — Dash sensors.
  — Cable reel.
  — SRS unit.
  — Seat belt tensioner (driver's and passenger's).

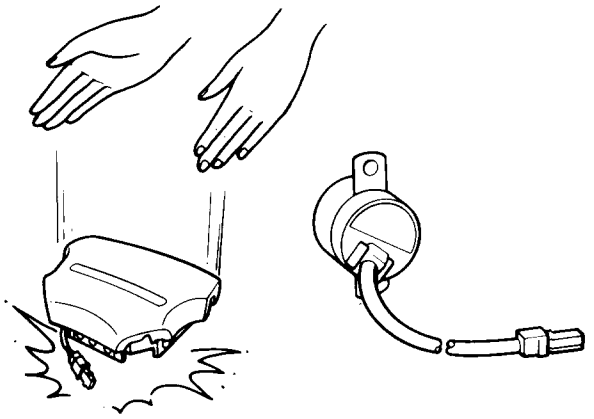

- Use only a digital multimeter to check the system. If it's not a Honda multimeter, make sure its output is 10 mA (0.01 A) or less when switched to the smallest value in the ohmmeter range. A tester with a higher output could damage the airbag circuit or cause accidental deployment and possible injury.

- Do not install used SRS parts from another car. When making SRS repairs, use only new parts.

- Except when performing electrical inspections, always disconnect both the negative cable and positive cable at the battery before beginning work.

- Replacement of the combination light and wiper/washer switches and cruise control switch can be done without removing the steering wheel: (see section 23)

Airbag Handling and Storage

Do not try to disassemble the airbag assembly. If has no serviceable parts. Once an airbag has been operated (deployed), it cannot be repaired or reused.

For temporary storage of the airbag assembly during service, please observe the following precautions:

- Store the removed airbag assembly with the pad surface up.

⚠WARNING If the airbag is improperly stored face down, accidental deployment could propel the unit with enough force to cause serious injury.

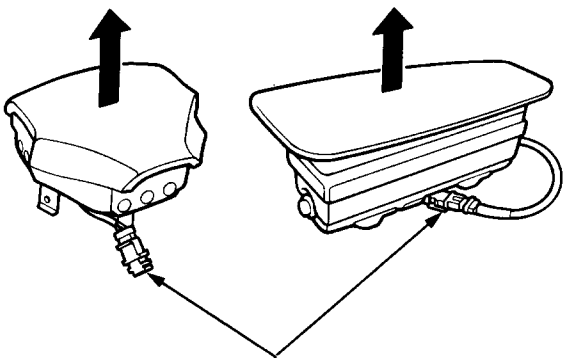

- Store the removed airbag assembly on a secure flat surface away from any high heat source (exceeding 212°F/100°C) and free of any oil, grease, detergent or water.

CAUTION: Improper handling or storage can internally damage the airbag assembly, making it inoperative.
If you suspect the airbag assembly has been damaged, install a new unit and refer to the Deployment/Disposal Procedures for scrapping of the damaged airbag.

Seat Belt Tensioner Handling and Storage

Do not try disassemble the seat belt tensioner assembly. It has no serviceable parts. Once seat belt tensioner has been operated, it cannot be repaired or reused.

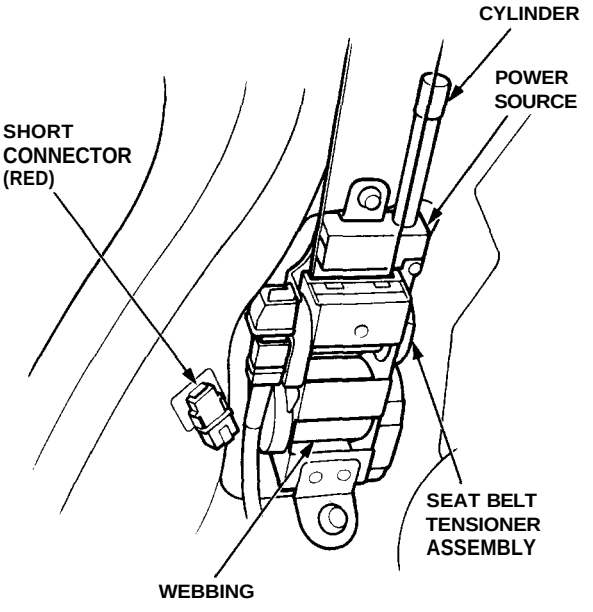

- Store the removed seat belt tensioner assembly on a secure flat surface away from any high heat source (exceeding 212°F/100°C) and free of any oil, grease, detergent or water.

- Follow these precautions below during removal of a tensioner.

  — Install its short connector (RED) as soon as the tensioner connector is disconnected.
  — Use only the test equipment specified in the Electrical section.
  — Do not disassemble the tensioner or allow any impact to it.

  For proper disposal see page 24-37.

Supplemental Restraint System (SRS)

Steering-related Precautions

- Steering Wheel and Cable Reel Alignment:

  NOTE: To avoid misalignment of the steering wheel or airbag on reassembly, make sure the wheels are turned straight ahead before removing the steering wheel.

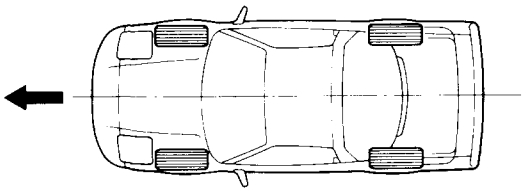

Rotate the cable reel clockwise unit it stops. Then rotate it counterclockwise (approximately two turns) until:

—The yellow gear tooth lines up with the mark on the cover.
—The arrow on the cable reel label points straight up.

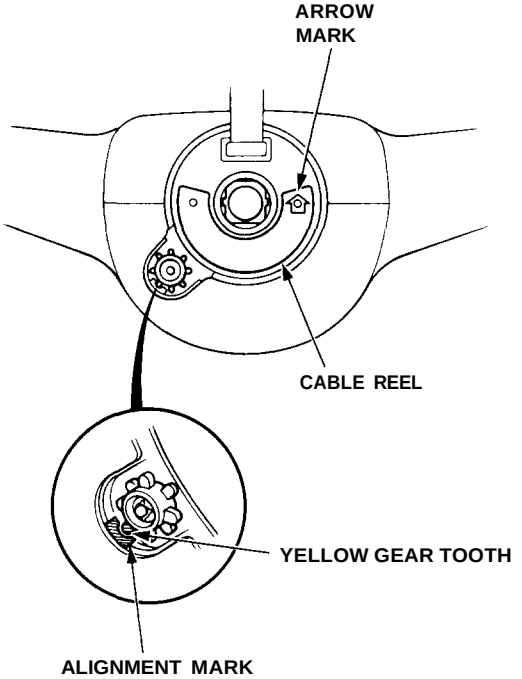

- Steering Column Removal:

  CAUTION:
  - **Before removing the steering column, first disconnect the connector between the cable reel and the SRS main harness.**
  - **If the steering column is going to be removed without dismounting the steering wheel, lock the steering by turning the ignition key to 0-LOCK position or remove the key from the ignition so that the steering wheel will not turn.**

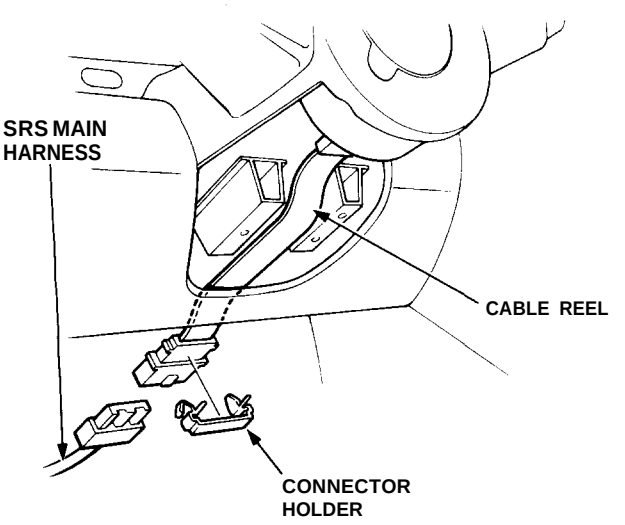

- Steering wheel:
  Do not replace the original steering wheel with any other design, since it will make it impossible to properly install the airbag (only use genuine Honda replacement parts).

- After reassembly confirm that the wheels are still turned straight ahead and that the steering wheel spoke angle is correct. If minor spoke angle adjustment is necessary, do so only by adjusting the tie-rods, not by removing and repositioning the steering wheel.

Sensor Inspection

CAUTION: Take extra care when painting or doing body work on any part of the dashboard lower panel. Avoid direct exposure of the sensors or wiring to heat guns, welding, or spraying equipment.

⚠ WARNING

- **Disconnect both the negative and positive battery cables.**
- **Install the short connectors before working around the dashboard lower panel or the SRS sensors.**

- After any degree of frontal body damage, inspect both dash sensors. Replace a sensor if it is dented, cracked, or deformed.

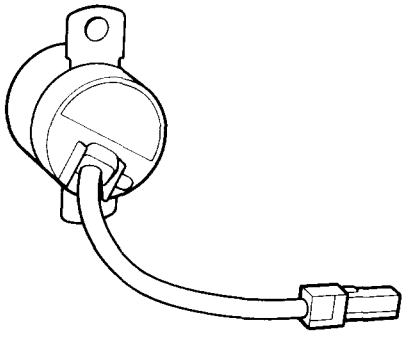

- Be sure the sensors are installed securely.

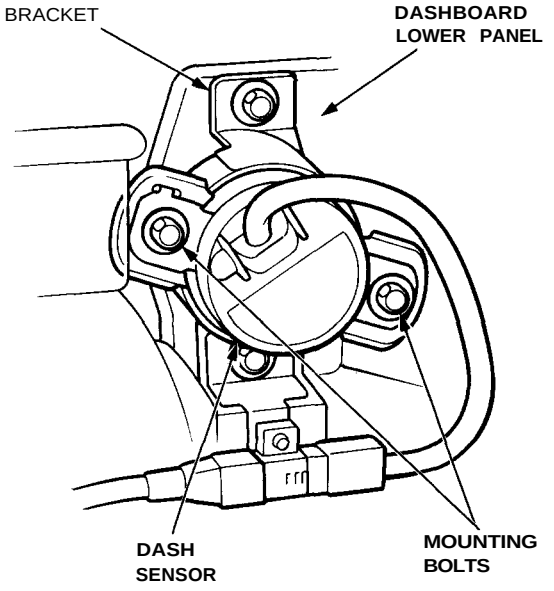

Wiring Precautions

- Never attempt to modify, splice or repair SRS wiring.

  NOTE: SRS wiring can be identified by special yellow outer protective covering.

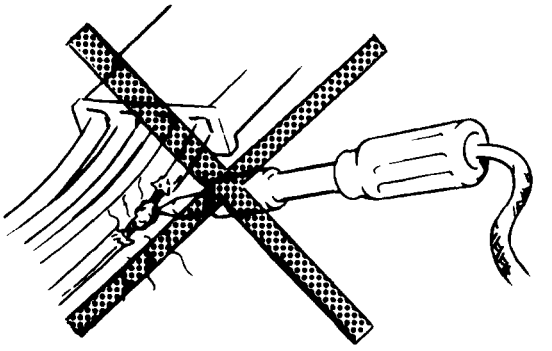

- Be sure to install the harness wires so that they are not pinched or interfering with other car parts.

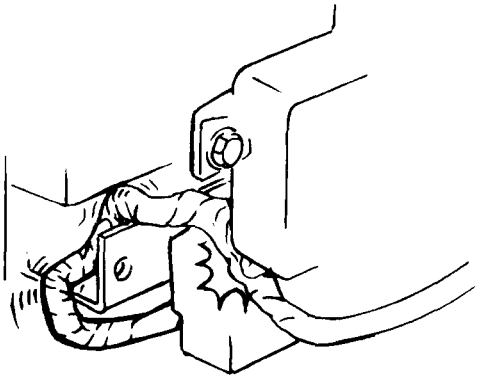

- Make sure all SRS ground locations are clean and grounds are securely fastened for optimum metal-to-metal contact. Poor grounding can cause intermittent problems that are difficult to diagnose.

(cont'd)

Short Connector Installation

- Install short connectors as follows whenever you are working near SRS wiring or components.

CAUTION: Before disconnecting the airbag connector, be sure to completely discharge the capacitor in the back-up circuit (by turning off the ignition switch and allowing three minutes to elapse) to prevent a malfunction of the seat belt tensioners.

1. Disconnect the battery negative cable, then disconnect the positive cable.
2. Remove the access panel from the steering wheel, then remove the short connector (RED) from the panel.

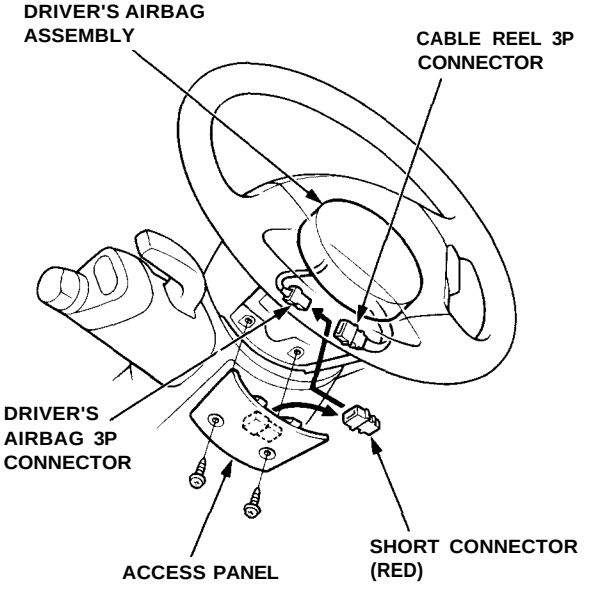

3. Disconnect the 3P connector between the driver's airbag and the cable reel, then install the short connector (RED) on the airbag side of the connector.
4. Install the special tool to the cable reel side of the connector.

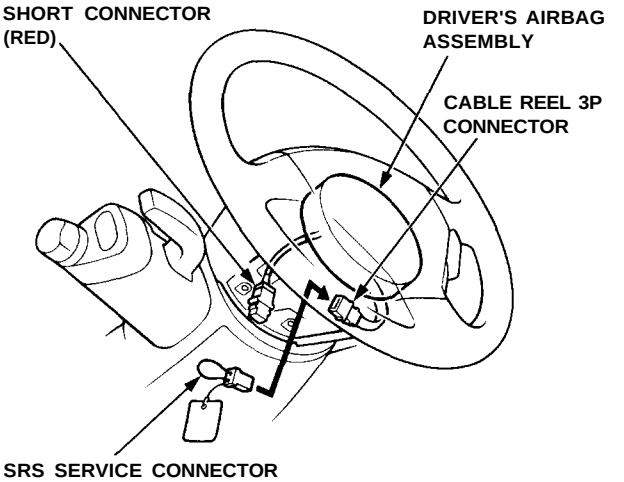

5. Remove the glove box, then disconnect the connector between the passenger's airbag and SRS main harness.
6. Install the short connector (RED) to the airbag side of the connector.

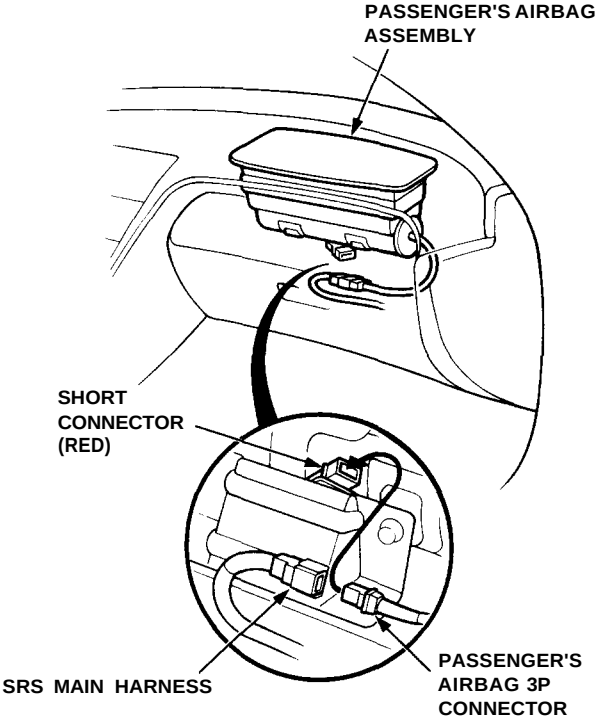

7. Install the special tool to the SRS main harness side of the 3P connector.

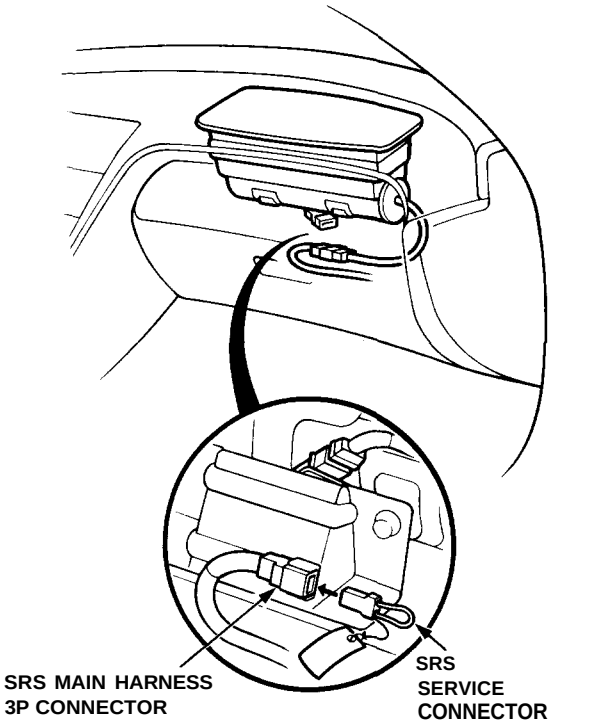

8. Remove the right rear side trim panel (see section 20).

9. Remove the short connector (RED) from the short connector holder.

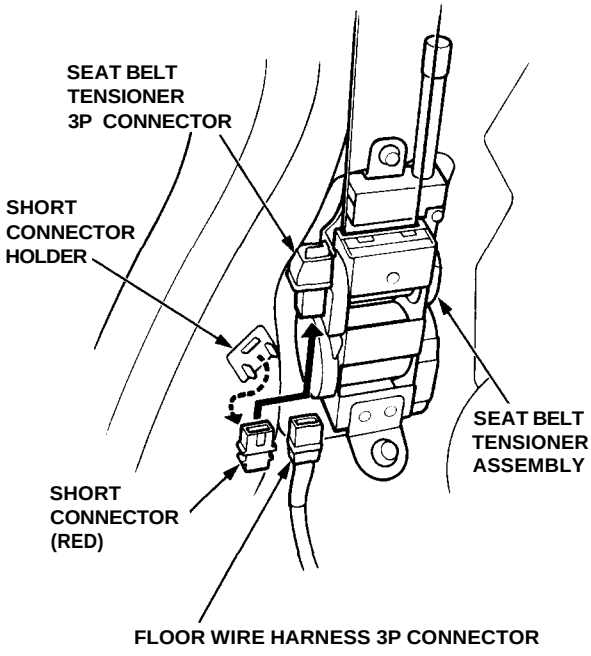

10. Disconnect the seat belt tensioner 3P connector, then install the short connector (RED) to the tensioner side of the connector.

11. Repeat steps 8, 9, and 10 on the left side.

12. After completing repair work, be sure to remove the short connectors and reconnect all SRS connectors.

(cont'd)

Supplemental Restraint System (SRS)

Short Connector Installation

- If you ever remove the under-dash fuse box or the SRS main harness, disconnect the SRS connector at the fuse box:

  CAUTION: Avoid breaking the connector; it's double-locked.

First lift the connector lid with a thin screwdriver, then press the connector tab down and pull the connector out.

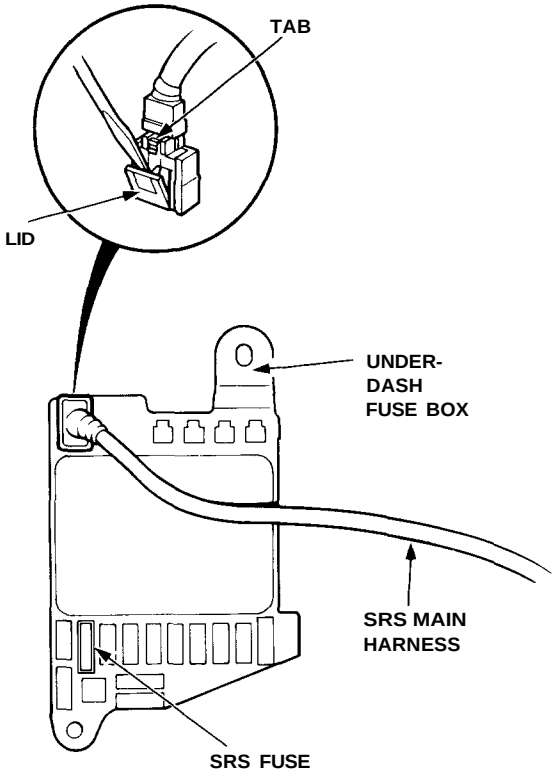

To reinstall the connector, push it into position until it clicks, then close its lid.

Inspection After Deployment

After a collision in which the airbags were deployed, inspect the following:

1. Inspect the dash sensors for physical damage. If the sensors are damaged, replace them.
2. Inspect all the SRS wire harnesses. Replace, don't repair, any damaged harnesses.
3. Inspect the cable reel for heat damage. If there is any damage, replace the cable reel.
4. Remove the passenger's lower dashboard panel, the glove box lid, and the glove box. Remove the passenger's airbag assembly, the mounting bracket, and frame from the dashboard. Remove the support bracket from the steering column beam.
5. Check for cracks around the passenger's airbag and glove box openings. Use a bright light to check from below, and a mirror to check from above. If any cracks are found, replace the dashboard.
6. After the car is completely repaired, turn the ignition switch on. If the SRS indicator light comes on for about six seconds and then goes off, the SRS system is OK. If the indicator light does not function properly, go to SRS Troubleshooting.

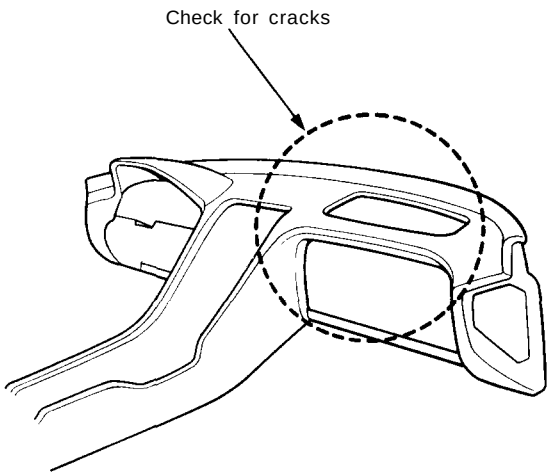

Troubleshooting

Self-diagnosis Function

The SRS unit includes a self-diagnosis function. If there is a failure in the sensors, SRS unit, inflator, or their circuits, the SRS indicator light in the gauge assembly goes ON.

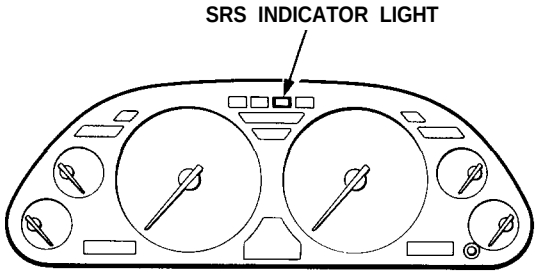

As a system check, the SRS indicator light also comes on when the ignition is first turned to the II position. If the light goes off after approximately six seconds, the system is OK.

If the SRS indicator light remains on (or fails to come on the system check mode) one of the SRS components (or the wiring/connectors in-between) is faulty.

Troubleshooting Precautions

- Always use the test harness. Do not use test probes directly on component connector terminals or wires; you may damage them or the control unit.
- When connecting any of the test harnesses to the system, push the connectors straight-in; do not bend the connector terminals.
- Before disconnecting the airbag connector(s), turn off the ignition switch and wait for at least three minutes to let the capacitor in the back-up circuit discharge. This will prevent a malfunction of the seat belt tensioners.
- Before disconnecting any part of the SRS wire harness, install the short connector (RED) on the airbags and both seat belt tensioners. After installing the short connectors on the airbags, immediately install one SRS Service Connector (Tool Number 07MAZ-SP0020A) on the cable reel connector (for the driver's airbag), and another on the SRS main harness connector (for the passenger's airbag). This will prevent any static electricity from triggering the seat belt tensioners before you disconnect them (see page 24-10).

SRS Indicator Light Troubleshooting

Possible conditions:

1. SRS indicator light does not come on at all — see page 24-15.
2. SRS indicator light stays on constantly — see page 24-18.
3. SRS indicator light comes on in combination with a failure of another electrical system (brake system light, malfunction indicator lamp etc.). Check for damage/corrosion at the under-dash fuse box.

NOTE:

- Before starting the applicable troubleshooting, check the condition of all SRS connectors and ground points.
- If the fault is not found after completing the applicable troubleshooting, substitute a known-good SRS unit and check whether the SRS indicator light goes off. If it does, the original SRS unit must be faulty; replace it.

Supplemental Restraint System (SRS)

Test Harness and Attachment Points

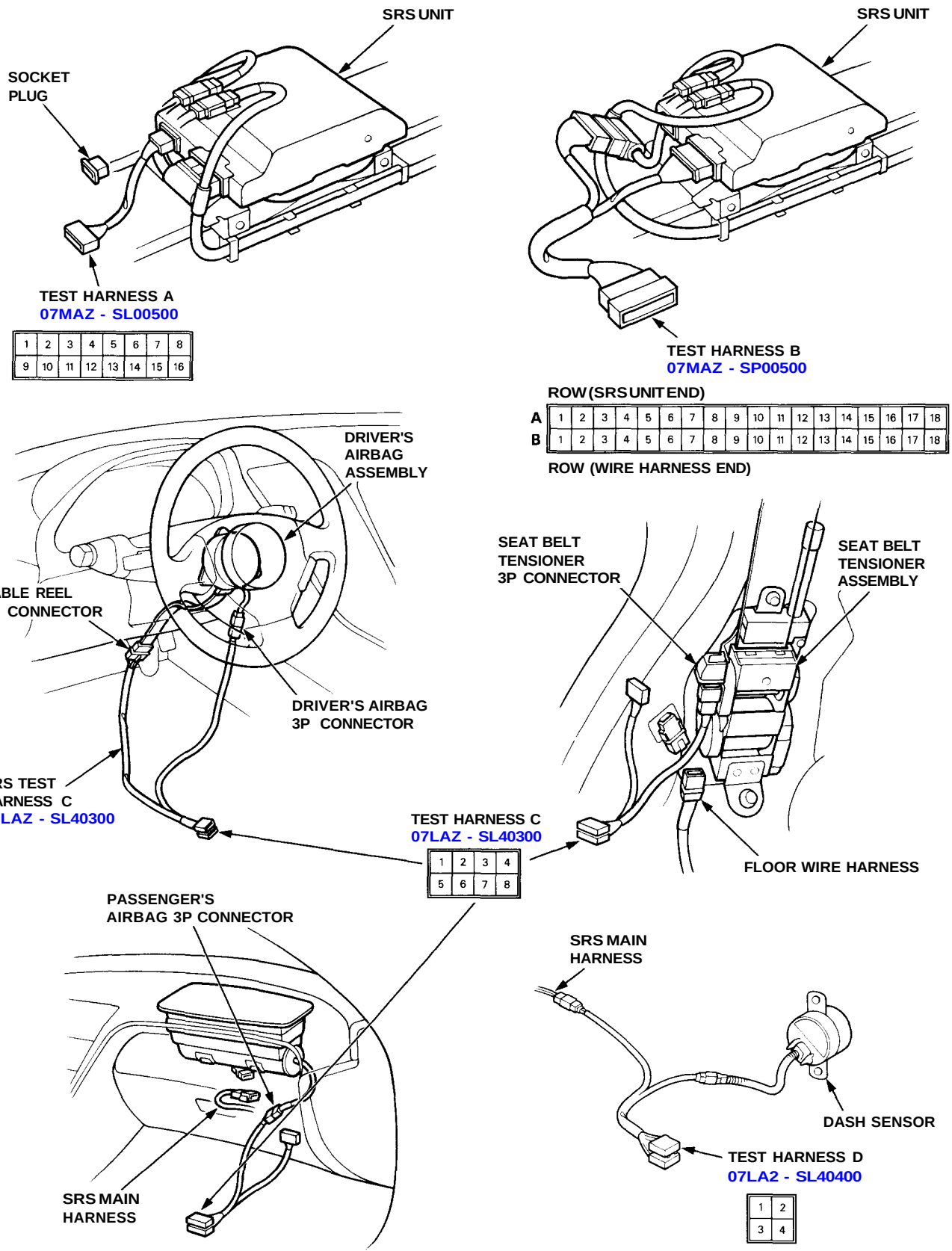

Airbag Assembly Removal

⚠ WARNING Store a removed airbag assembly with the pad surface up; if the airbag is improperly stored face down, accidental deployment could propel the unit with enough force to cause serious injury.

CAUTION:
- **Do not install used SRS parts from another car. When repairing, use only new SRS parts.**
- **Carefully inspect the airbag assembly before you install it. Do not install an airbag assembly that shows signs of being dropped or improperly handled, such as dents, cracks or deformation.**
- **Do not disassemble or tamper with the airbag assembly.**

1. Before disconnecting any parts of the SRS wire harness, install the short connectors (RED) (see page 24-10).

Driver's Airbag:

2. Remove the two Torx bolts using a Torx T30 bit, then remove the driver's airbag assembly.

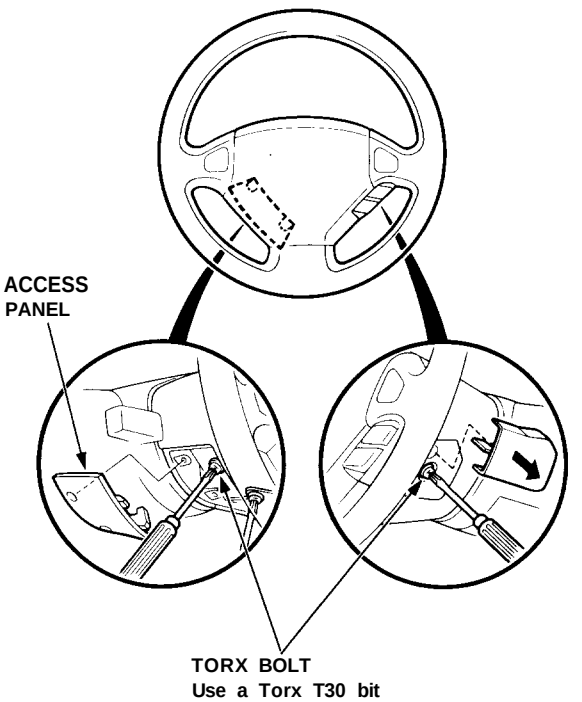

Passenger's Airbag:

3. Remove the glove box, then remove the four mounting nuts from the bracket.

4. Remove the bracket and mounting nut from the passenger's airbag assembly.

5. Carefully lift the passenger's airbag assembly out of the dashboard.

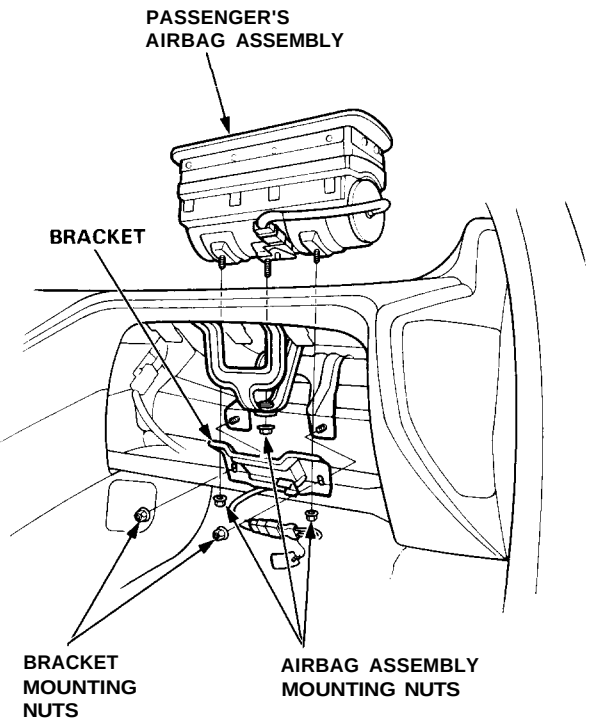

Airbag Assembly Installation

CAUTION:

- **Be sure to install the SRS wiring so that it is not pinched or interfering with other car parts.**
- **Be sure the battery cables are disconnected.**
- **After completing repair work, be sure to remove the short connectors (RED) and reconnect all the connectors.**

Driver's Airbag:

1. Place the driver's airbag assembly in the steering wheel, and secure it with new Torx bolts.

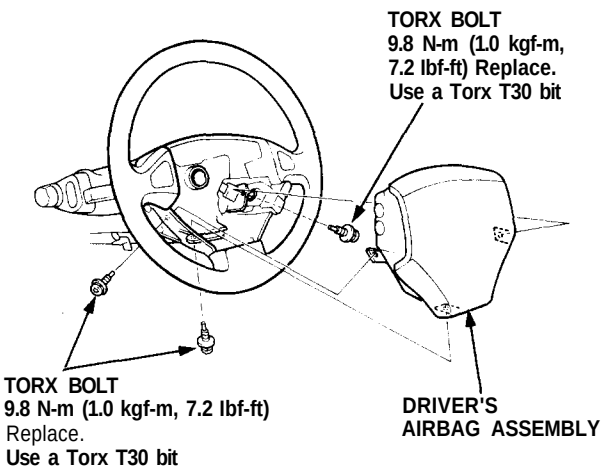

Passenger's Airbag:

2. Place the passenger's airbag assembly in the dashboard.

3. Press the airbag assembly downwards, and turn the adjusting nut until it touches the lower part of the airbag assembly. Then, turn it back half a turn so that there is a small gap between adjusting nut and the airbag assembly.

4. Install the bracket and mounting nuts.

5. Tighten the three airbag mounting nuts, then tighten the two mounting nuts on the bracket.

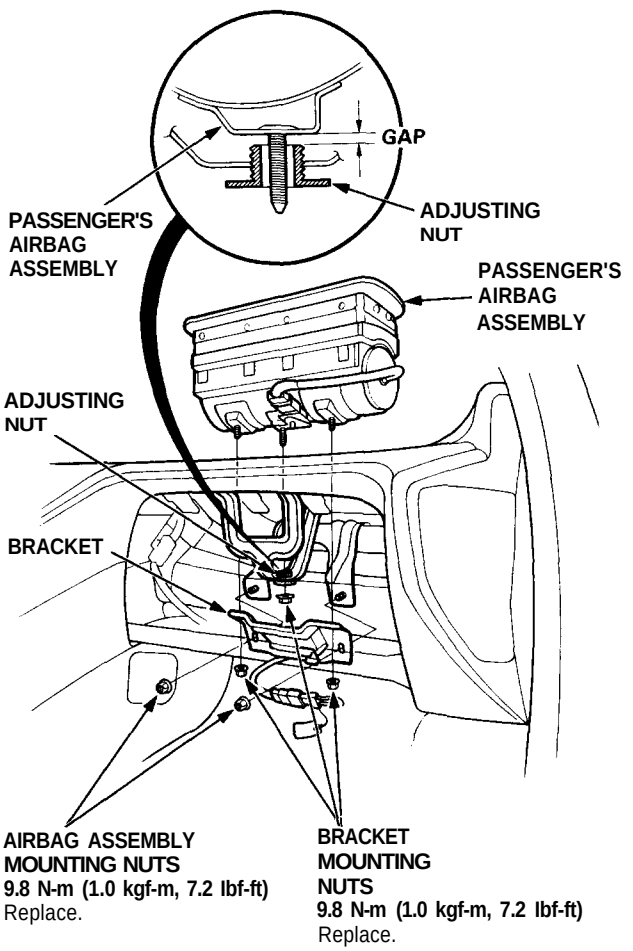

(cont'd)

Airbag Assembly Installation (cont'd)

6. Remove the short connectors from the passenger's airbag connector and from the SRS main harness connector.

7. Reconnect the passenger's airbag 3P connector to the SRS main harness connector.

8. Reinstall the glove box.

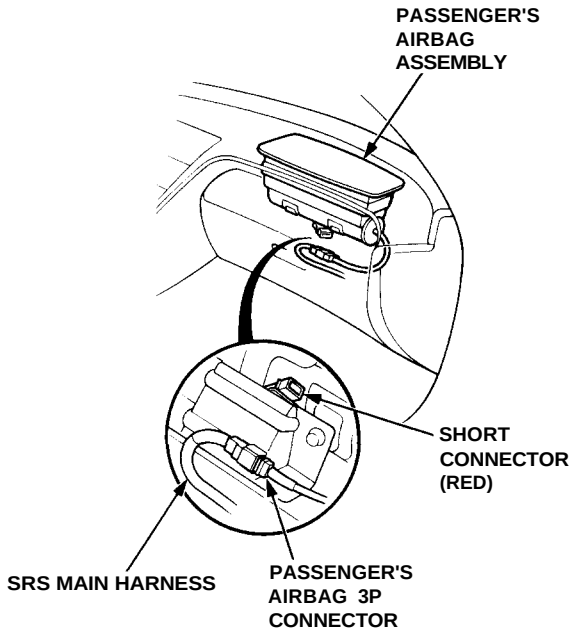

9. Remove the short connectors from the driver's airbag connector and from the cable reel 3P connector.

10. Reconnect the driver's airbag 3P connector to the cable reel 3P connector. Attach the short connector to the access panel, then reinstall the panel on the steering wheel.

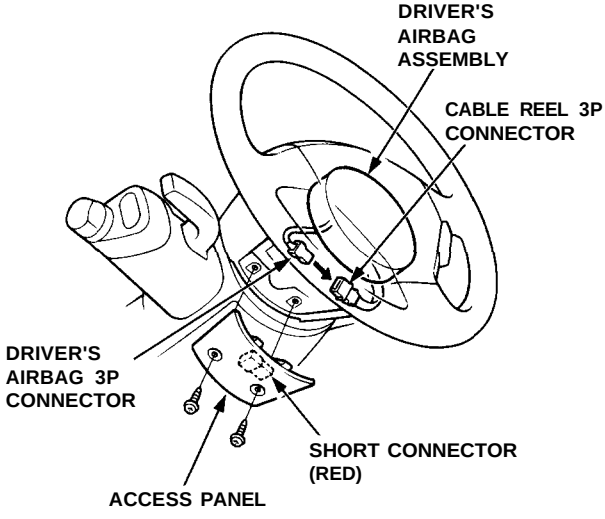

11. Remove the short connectors from the seat belt tensioners, then attach them to their holders.

12. Reconnect the floor wire harness 3P connector to the seat belt tensioner.

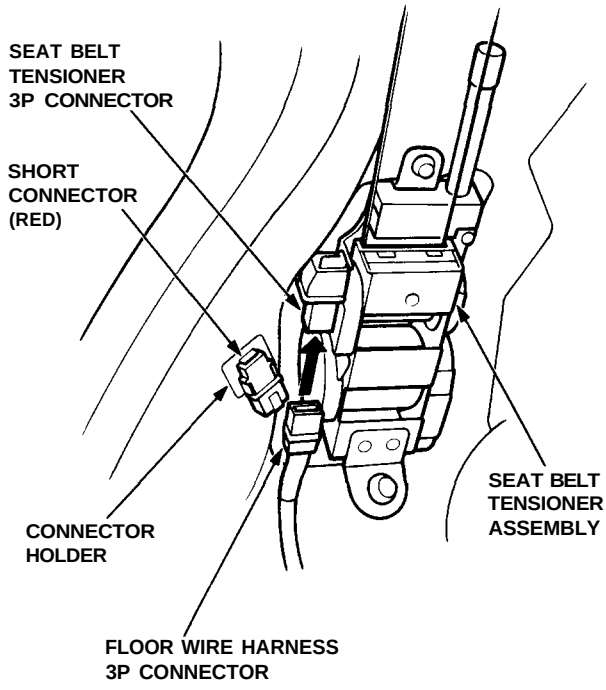

13. Reinstall the rear side trim panel (see section 20).

14. Reconnect the battery positive cable, then the negative cable.

15. After installing the airbag assembly, confirm proper system operation:
    - Turn the ignition switch ON (II); the instrument panel SRS indicator light should come on for about six seconds and then go off.
    - Confirm operation of horn buttons.
    - Confirm operation of cruise control set/resume switch.

Airbag/Seat Belt Tensioner Disposal

Before scrapping any airbags or seat belt tensioners (including those in a whole car to be scrapped), the airbags must be deployed and the seat belt tensioners must be triggered. If the car is still within the warranty period, before deploying the airbag(s) or triggering the seat belt tensioners, the Acura District Technical Manager must give approval and/or special instruction. Only after the airbags are already deployed or the seat belt tensioners are triggered (as the result of vehicle collision, for example), can the normal scrapping procedure be done.
If the airbags or the seat belt tensioners appear intact (not deployed or triggered), treat them with extreme caution.
Follow the procedure, described below.

Deploying the Airbag(s): In-vehicle

NOTE: If an SRS vehicle is to be entirely scrapped, its airbags should be deployed while still in the vehicle. The airbags should not be considered as salvageable parts and should never be installed in another vehicle.

⚠ WARNING Confirm that each airbag assembly is securely mounted; otherwise, severe personal injury could result from deployment.

1. Disconnect both the negative cable and positive cable from the battery.

2. Confirm that the special tool is functioning properly by following the check procedure on the label of the tool or on page 24-41.

Driver's Airbag:

3. Remove the access panel, then disconnect the 3P connector between the airbag and the cable reel.

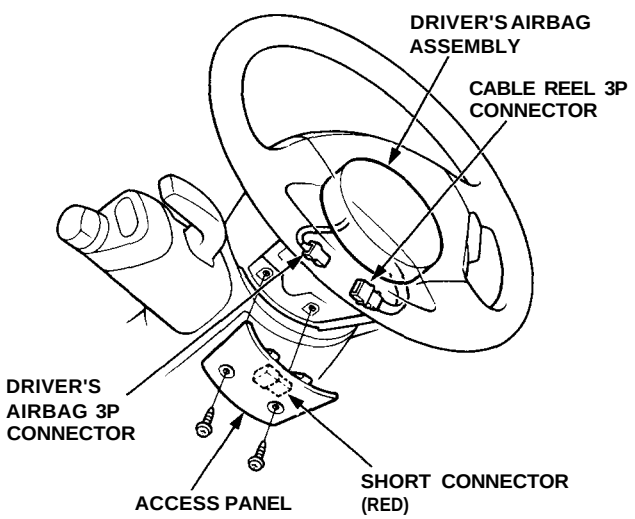

Passenger's Airbag:

4. Remove the glove box, then disconnect the connector between the passenger's airbag and SRS main harness.

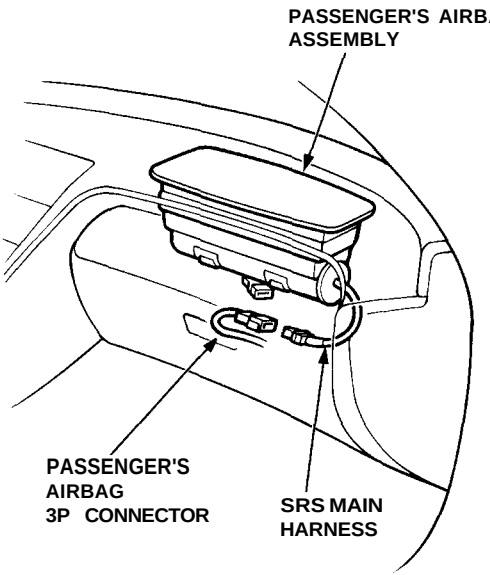

5. Cut off the driver's airbag connector, then strip the wire ends and connect the special tool alligator clips to them. Place the special tool approximately thirty feet away from the airbag.

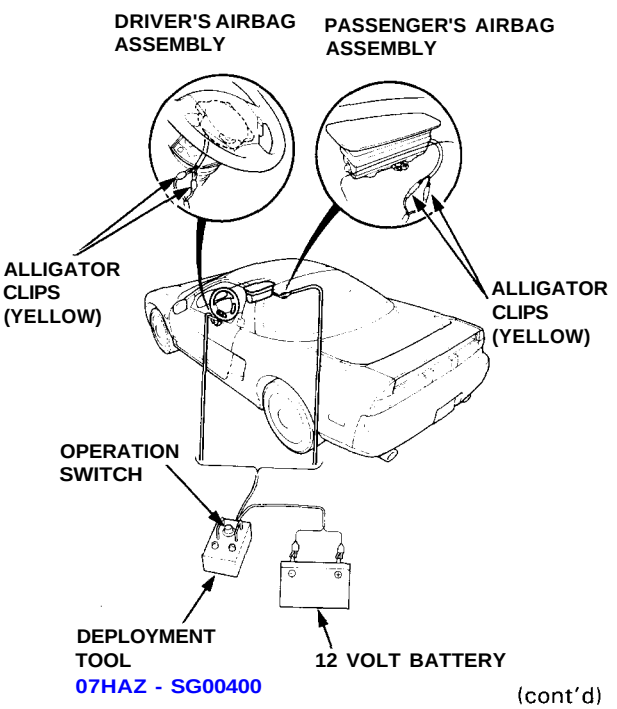

(cont'd)

Airbag/Seat Belt Tensioner Disposal (cont'd)

6. Connect a 12 volt battery to the tool:
   - If the green light on the tool comes on, the airbag igniter circuit is defective and cannot be deployed. Go to Damaged Airbag Special Procedure.
   - If the red light on the tool comes on, the airbag is ready to be deployed.

7. Push the tool's deployment switch. The airbag should deploy (deployment is both highly audible and visible — a loud noise and rapid inflation of the bag, followed by slow deflation).

   - If deployment happens and the green light on the tool comes on, continue with this procedure.
   - If the airbag doesn't deploy, yet the green light comes on, its igniter is defective. Go to Damaged Airbag Special Procedure.

   ⚠ WARNING During deployment, the airbag assembly can become hot enough to burn you. Wait thirty minutes after deployment before touching the assembly.

8. Dispose of the complete airbag assembly. No part of it can be reused. Place it in a sturdy plastic bag and seal it securely.

   CAUTION:
   - **Wear a face shield and gloves when handing a deployed airbag.**
   - **Wash your hands and rinse them well with water after handling a deployed airbag.**

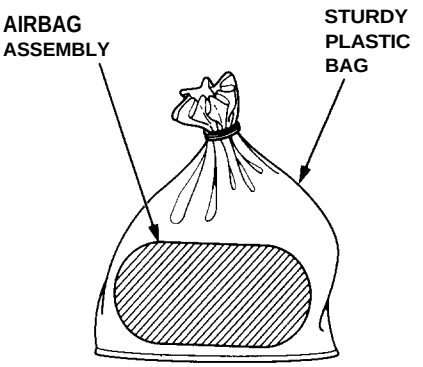

9. Repeat steps 5 thru 8 for a passenger side airbag.

Triggering the Seat Belt Tensioners:

NOTE: If an SRS car containing one or both intact seat belt tensioner(s) is to be entirely scrapped, the seat belt tensioner(s) should be triggered while still in the vehicle.
A tensioner is not a salvageable part and should never be installed in another vehicle.

1. Disconnect both the negative cable and positive cable from the battery.

2. Confirm that the special tool is functioning properly by following the check procedure on the label of the tool, or on page 24-41.

3. Remove the rear side trim panel (see section 20).

4. Cut off the seat belt tensioner connector, then strip the wire ends and connect the special tool alligator clips to them as shown. Place the special tool approximately thirty feet away from the vehicle.

5. Buckle the seat belt, then pull out about two inches of slack, make a loop with it, and hold the loop in place with a clip as shown.

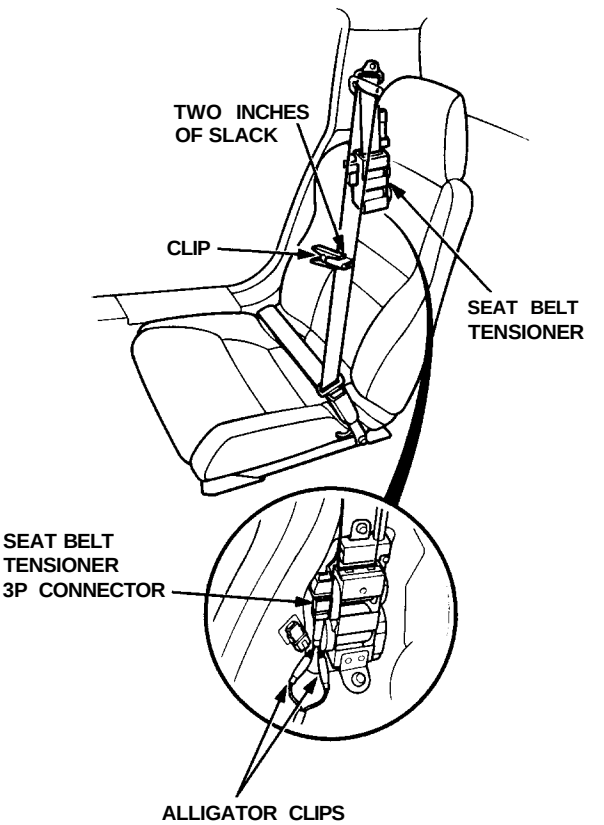

6. Connect a 12 volt battery to the tool:
   - If the green light on the tool comes on, the tensioner igniter circuit is defective. Go to Damaged Airbag or Tensioner Special Procedure.
   - If the red light on the tool comes on, the tensioner is ready to trigger.

7. Push the tool's deployment switch to trigger the tensioner igniter. The tensioner should take up the slack in the belt (pop the clip off), and lock the belt in its retracted position.
   - If the tensioner works and the green light on the tool comes on, continue with this procedure.
   - If the tensioner doesn't work, yet the green light comes on, its igniter is defective. Go to Damaged Airbag or Tensioner Special Procedure.

⚠ WARNING During activation, the tensioner can become hot enough to burn you. Wait thirty minutes after activation before touching it.

8. Dispose of the complete tensioner assembly. No part of it can be reused.

9. Repeat steps 3 thru 8 on the other side if that tensioner has not been triggered.

Simultaneously Deploying Airbag(s) and Triggering Seat Belt Tensioners:

1. Disconnect both the negative cable and positive cable from the battery.

2. Confirm that the special tool is functioning properly by following the check procedure on the label of the tool, or on page 24-41.

3. Disconnect the SRS main harness 18P connector from the SRS unit.

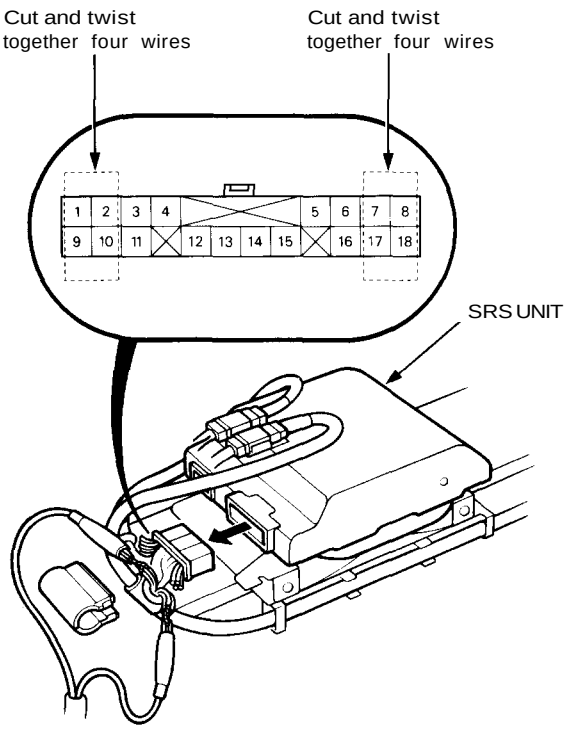

4. Cut the eight wires at the SRS main harness 18P connector four on each side as shown. Strip the end of the wires, then twist them together to make each set of four wires into one.

5. Connect the alligator clips of the deployment tool to the ends of the twisted wires.

(cont'd)

6. Buckle the seat belt, then pull out about two inches of slack, make a loop with it, and hold the loop in place with a clip as shown.

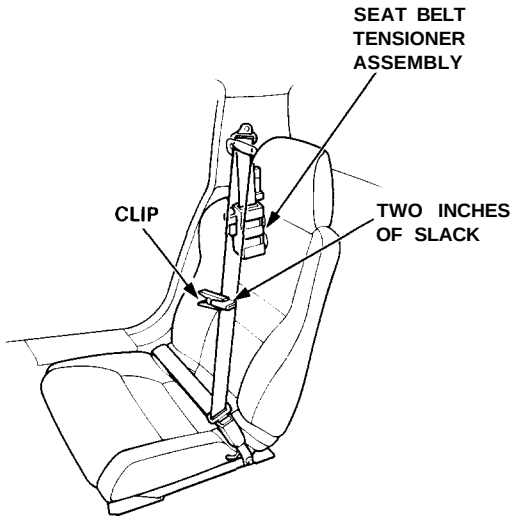

7. Repeat step 6 on the other front belt.

8. Connect a 12 volt battery to the tool:
   - If the green light on the tool comes on, an igniter circuit is defective. Go to Damaged Airbag or Tensioner Special Procedure.
   - If the red light on the tool comes on, the system is ready.

9. Push the tool's deployment switch. The airbags should deploy (deployment is both highly audible and visible — a loud noise and rapid inflation of the bags, followed by slow deflation).
   The seat belt tensioners should take up the slack (pop the clips off the belts), and lock the belts in retracted positions.
   - If the airbags are deployed, the tensioners are triggered, and the green light on the tool comes on, continue with this procedure.
   - If an airbag doesn't deploy or a tensioner isn't triggered, yet the green light comes on, an igniter is defective. Go to Damaged Airbag or Tensioner Special Procedure.

   ⚠ WARNING During airbag deployment and tensioner activation the airbag and tensioner assemblies can become hot enough to burn you. Wait thirty minutes after activation before touching them.

10. Dispose of the complete airbag and tensioner assembly. No part of them can be reused.

Deploying the Airbag(s): Out-of-vehicle

NOTE: If an intact airbag assembly has been removed from a scrapped vehicle or has been found defective or damaged during transit, storage or service, it should be deployed as follows:

⚠ WARNING Position the airbag assembly face up, outdoors on flat ground at least thirty feet from any obstacles or people.

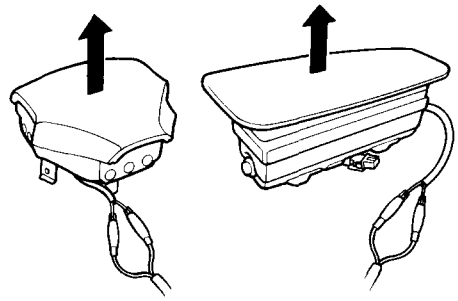

1. Confirm that the special tool is functioning properly by following the check procedure on the following page or on the tool label.

2. Remove the short connector from the airbag connector.

3. Follow steps 5, 6, 7, and 8 of the in-vehicle deployment procedure.

Damaged Airbag or Tensioner Special Procedure.

⚠ WARNING If an airbag or tensioner cannot be deployed or triggered, it should not be treated as normal scrap; it should still be considered a potentially explosive device that can cause serious injury.

1. If installed in a vehicle, follow the removal procedures in this section.
2. Intertwine the stripped ends of the two airbag or tensioner wires to make a short circuit.
3. Package the airbag or tensioner in exactly the same packaging that the new replacement part came in.
4. Mark the outside of the box "DAMAGED AIRBAG (or TENSIONER) NOT DEPLOYED" so it does not get confused with your parts stock. If applicable, also note on the box the VIN of the vehicle from which it was removed.
5. Contact your Acura District Technical Manager for how and where to return it for disposal.

Deployment Tool: Check Procedure.

1. Connect the yellow clips to both switch protector handles on the tool; connect the tool to a battery.
2. Push the operation switch: green means the tool is OK; red means the tool is faulty.
3. Disconnect the battery and the yellow clips.

Cable Reel Removal

⚠WARNING Store a removed airbag assembly with the pad surface up. If the airbag is improperly stored face down, accidental deployment could propel the unit with enough force to cause serious injury.

CAUTION:

- **Carefully inspect the airbag assembly before installing it. Do not install an airbag assembly that shows signs of being dropped or improperly handled, such as dents, cracks or deformation.**
- **Always keep the short connectors (RED) on the airbags when the harness is disconnected.**
- **Do not disassemble or tamper with the airbag assembly.**

1. Disconnect the battery negative cable and then the positive cable.
2. Before disconnecting any part of the SRS wire harness, install the short connectors (RED) (see page 24-10).
3. Make sure the wheels are aligned straight ahead.
4. Remove the dashboard lower cover, then disconnect the foot light connector and lights-on chime connector from the dashboard lower cover.

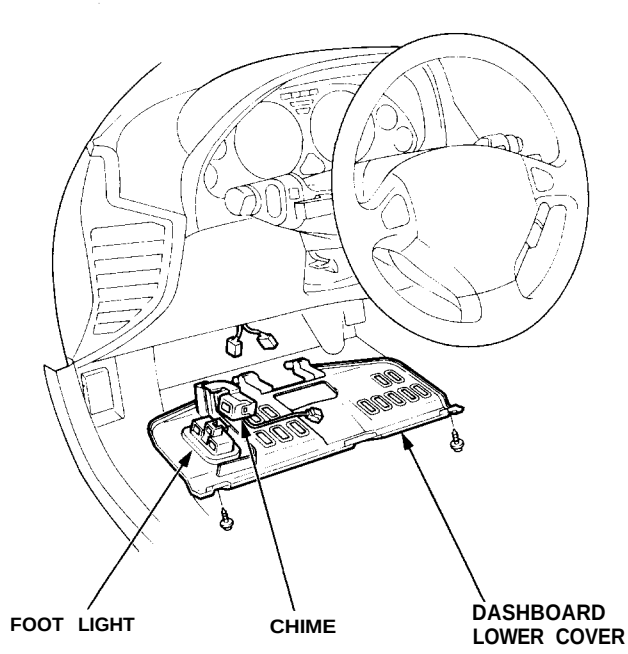

5. Remove the column covers.

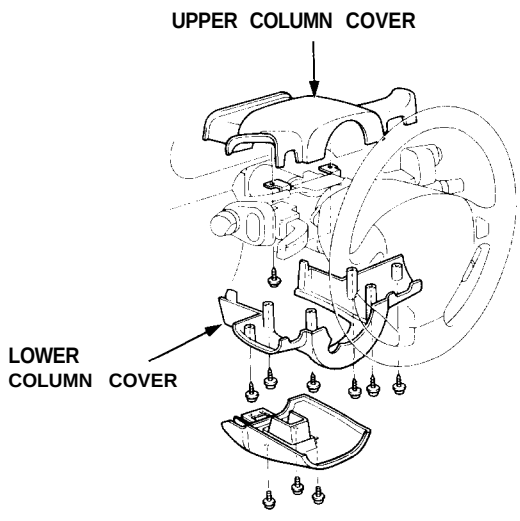

6. Disconnect the connector between the cable reel and SRS main harness.

7. Remove the driver's airbag assembly from the steering wheel, then remove the steering wheel nut.

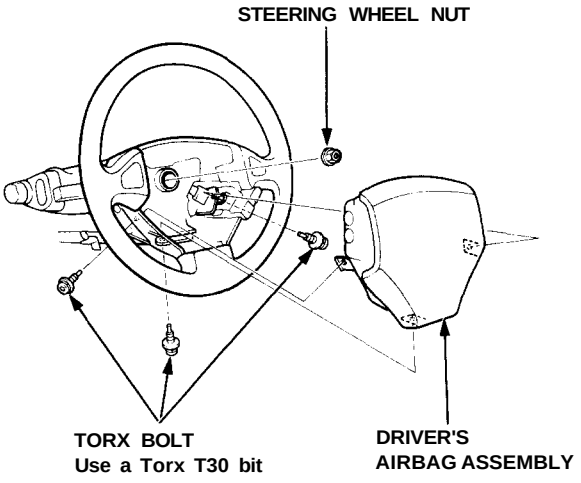

8. Disconnect the connectors from the horn and cruise control set/resume switches, then remove the cable reel 3P connector from its clips.

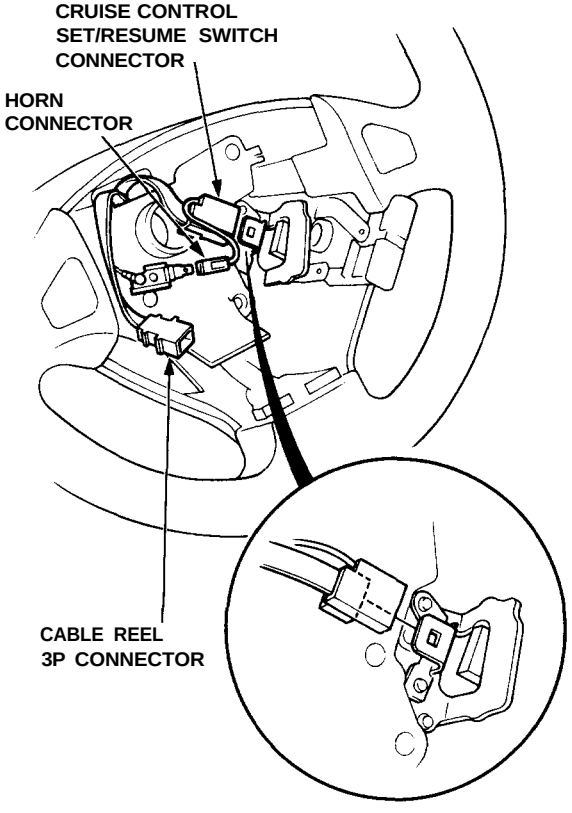

9. Remove the steering wheel from the column.

10. Remove the cable reel and cancel sleeve.

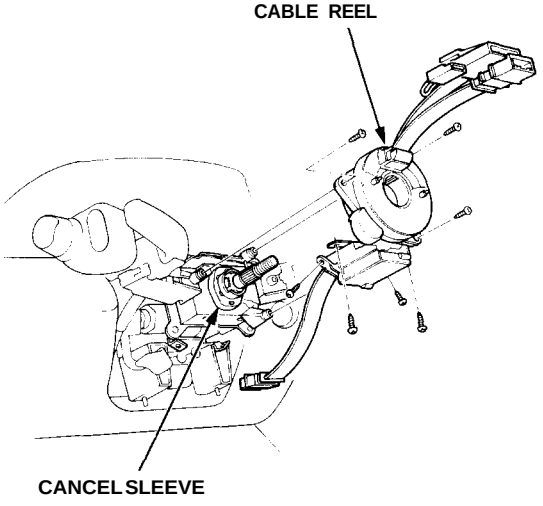

Cable Reel Installation

CAUTION:
- **Before installing the steering wheel, the front wheels should be aligned straight ahead.**
- **Be sure to install the harness wires so that they are not pinched or interfering with other car parts.**
- **After reassembly, confirm that the wheels are still turned straight ahead and that steering wheel spoke angle is correct. If minor spoke angle adjustment is necessary, do so only by adjusting the tie-rods, not by removing and repositioning the steering wheel.**

1. Align the cancel sleeve grooves with the cable reel projections.

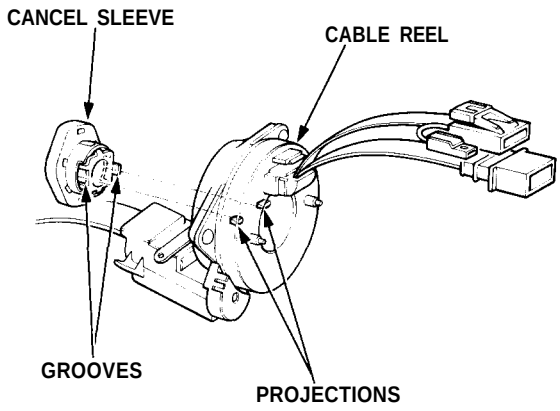

2. Carefully install the cable reel and the cancel sleeve on the steering column shaft.

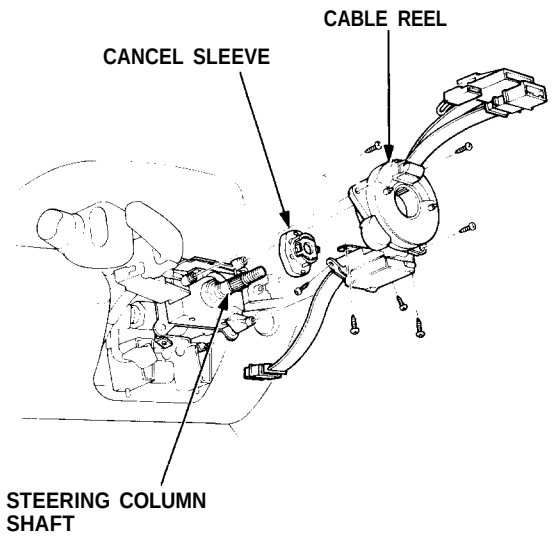

3. Install the column covers.

4. Center the cable reel.
   Do this by first rotating the cable reel clockwise until it stops.
   Then rotate it counterclockwise (approximately two turns) until:
   - **The yellow gear tooth lines up with the alignment mark on the cover.**
   - **The arrow mark on the cable reel label points straight up.**

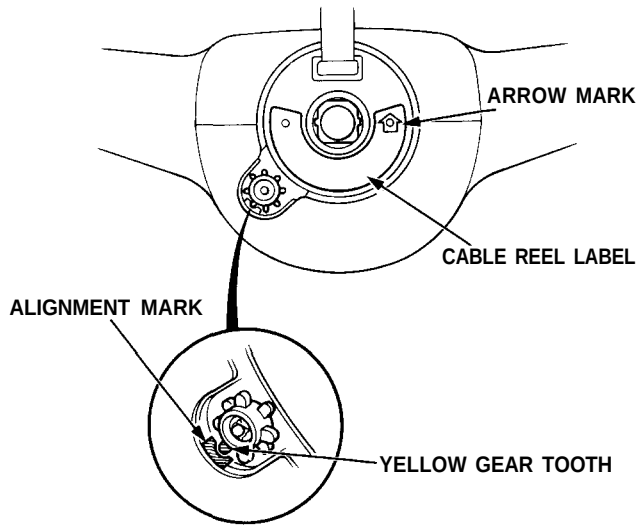

5. Install the steering wheel, and attach the cable reel 3-P connector to the steering wheel clips.

6. Connect the horn connector and cruise control connector.

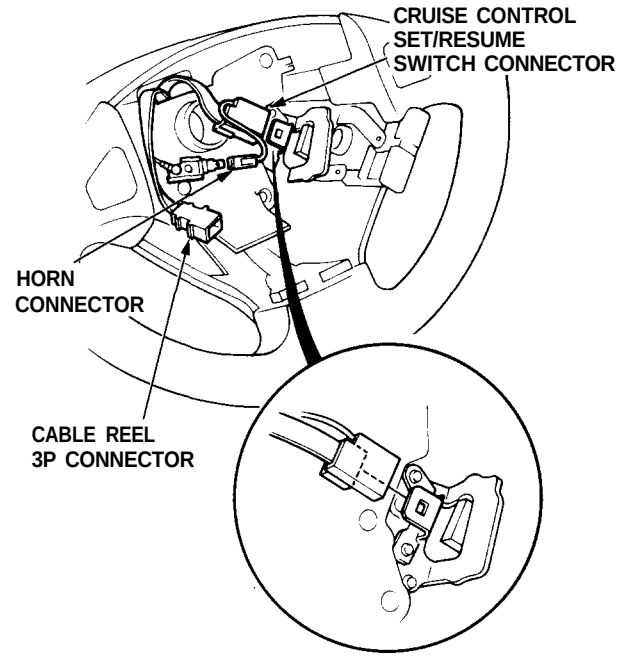

7. Install the steering wheel nut.

8. Install the driver's airbag assembly.

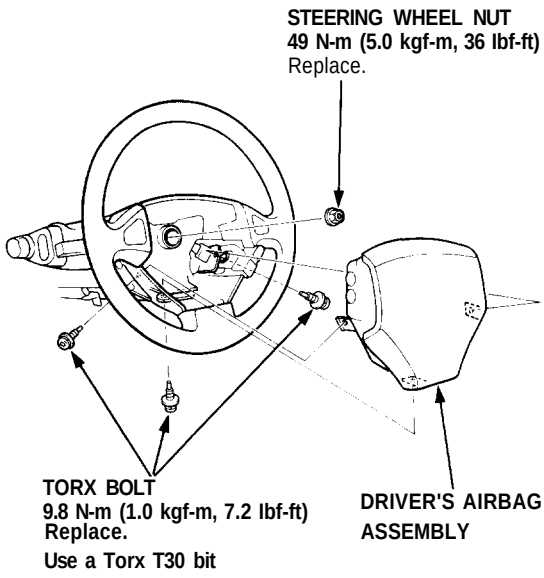

9. Connect the cable reel harness to the SRS main harness below the pedal bracket.

10. Connect the foot light harness and lights-on chime to the dashboard lower cover, then install the lower cover.

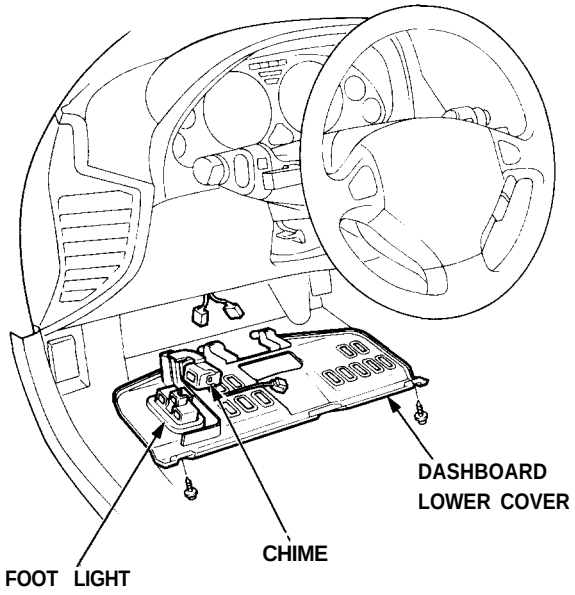

11. Remove the short connector (RED) from the passenger's airbag and the SRS Service Connector from the SRS main harness.

12. Reconnect the passenger's airbag 3P connector to the SRS main harness connector, then reinstall the glove box.

13. Remove the short connector (RED) from the driver's airbag and the SRS Service Connector from the cable reel.

14. Reconnect the driver's airbag 3P connector to the cable reel 3P connector. Attach the short connector (RED) to the access panel, then reinstall the panel on the steering wheel.

15. Remove the short connector (RED) from both seat belt tensioners, then attach the short connectors (RED) to their holders.

16. Reconnect the floor wire harness connectors to the driver's and passenger's seat belt tensioners.

(cont'd)

Cable Reel Installation (cont'd)

17. Reconnect the battery positive cable, then the negative cable.

18. After installing the cable reel, confirm proper system operation:
    - Turn the ignition switch ON (II); the instrument panel SRS indicator light should come on for about six seconds and then go off.
    - Confirm operation of horn buttons.
    - Confirm operation of the headlight and wiper switches.
    - Confirm operation of cruise control set/resume switch.
    - Rotate the steering wheel counterclockwise to make sure the yellow gear tooth lines up with the slot on the cover.

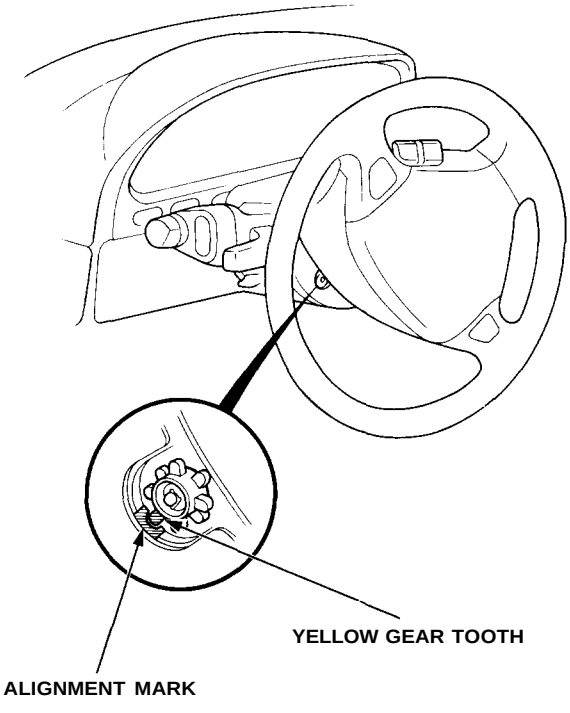

Dash Sensor Removal

CAUTION:
- **Do not damage the sensor wiring.**
- **Do not install used SRS parts from another car, When repairing an SRS, use only new parts.**
- **Carefully inspect the dash sensors for signs of being dropped or improperly handled, such as dents, cracks or deformation.**

1. Disconnect the battery negative cable, then the positive cable.
2. Before disconnecting any part of the SRS wire harness, install the short connectors (RED) (see page 24-10).
3. Remove the dashboard lower cover.
4. Pull back the carpeting, and disconnect the 2P connector between the dash sensor and SRS main harness.

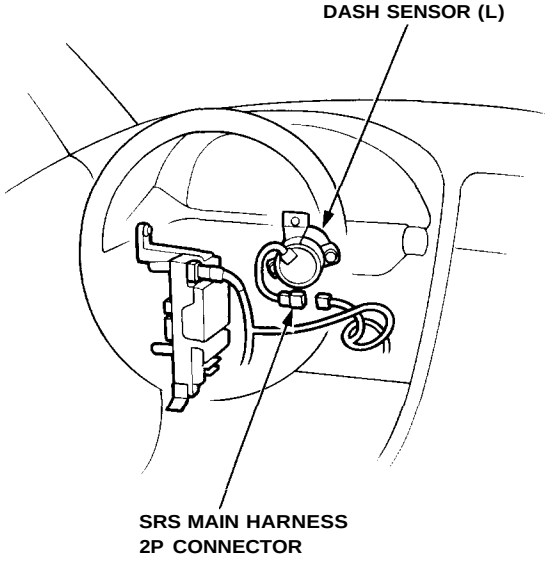

5. Remove the two dash sensor mounting bolts from the sensor bracket, then remove the dash sensor.

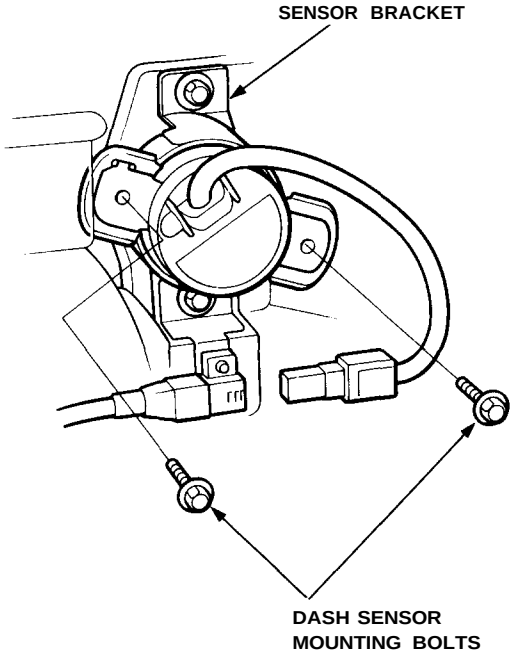

Dash Sensor Installation

CAUTION:
- **Be sure to install the harness wires so that they are not pinched or interfering with other car parts.**
- **Replace a sensor if it is dented, cracked or deformed.**
- **For the SRS to function properly, the right and left sensors must be installed on the proper sides.**

1. Be sure the battery cables are disconnected.
2. Install the sensor securely.

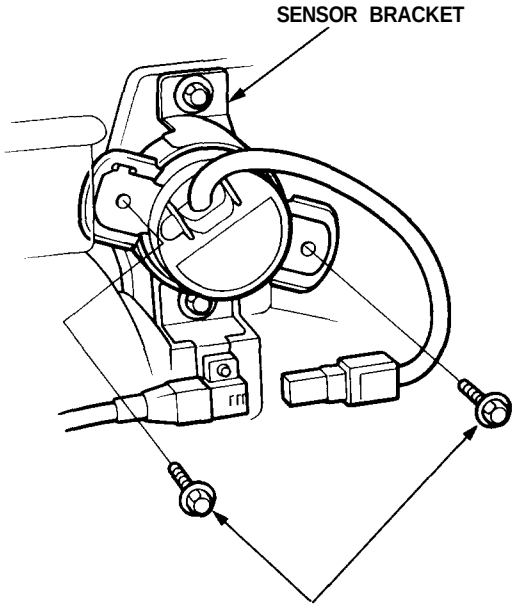

DASH SENSOR MOUNTING BOLTS
8 x 1.25 mm
22 N-m (2.2 kgf-m, 16 lbf-ft)
Replace.

3. Remove the short connectors (RED) from the passenger's airbag, and remove the SRS Service Connector from the SRS main harness.
4. Reconnect the passenger's airbag 3P connector to the SRS main harness 3P connector, then reinstall the glove box.
5. Remove the short connector (RED) from the driver's airbag, and remove the SRS Service Connector from the cable reel.
6. Reconnect the driver's airbag 3P connector to the cable reel connector. Attach the short connector (RED) to the access panel, then reinstall the panel on the steering wheel.
7. Remove the short connectors (RED) from both seat belt tensioners, then attach the short connectors (RED) to their holders.
8. Reconnect the floor wire harness connectors to the driver's and passenger's seat belt tensioners.
9. Reconnect the battery positive cable, then the negative cable.
10. After installing the dash sensor, confirm proper system operation:
    Turn the ignition switch ON (II); the SRS indicator light should come on for about six seconds and then go off.

SRS Unit Removal

CAUTION:

- **Always keep the short connectors on the airbags when the harness is disconnected.**
- **Do not damage the SRS unit terminals or connectors.**
- **Do not disassemble the SRS unit; it has no serviceable parts.**
- **Store the SRS unit in a clean, dry area.**
- **Do not use any SRS unit which has been subjected to water damage or shows signs of being dropped or improperly handled, such as dents, cracks or deformation.**

1. Disconnect the battery negative cable, then the positive cable.
2. Before disconnecting any part of the SRS wire harness, install the short connectors (RED) (see page 24-10).
3. Pull down the carpeting from the front console.

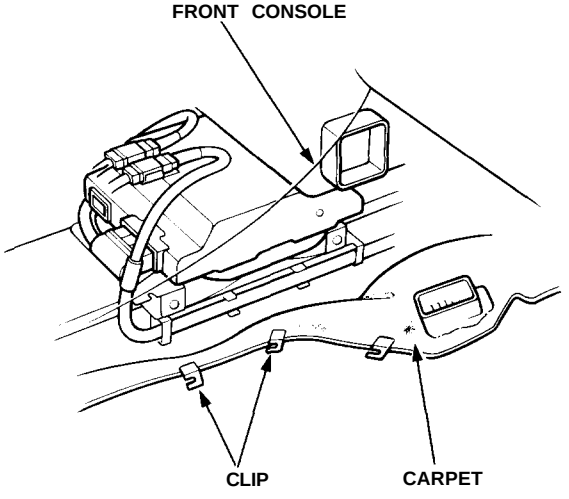

4. Disconnect the SRS unit connector, then unclip the SRS main harness from the holders.
5. Remove the four SRS unit mounting bolts.
6. Pull the SRS unit out from the passenger's side.

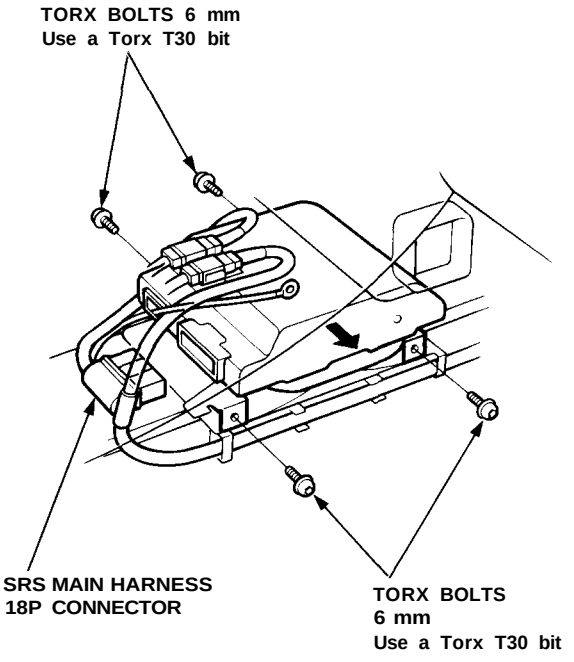

SRS Unit Assembly Installation

CAUTION: Be sure to install the SRS wiring so that it is not pinched or interfering with other car parts.

1. Install the SRS unit.

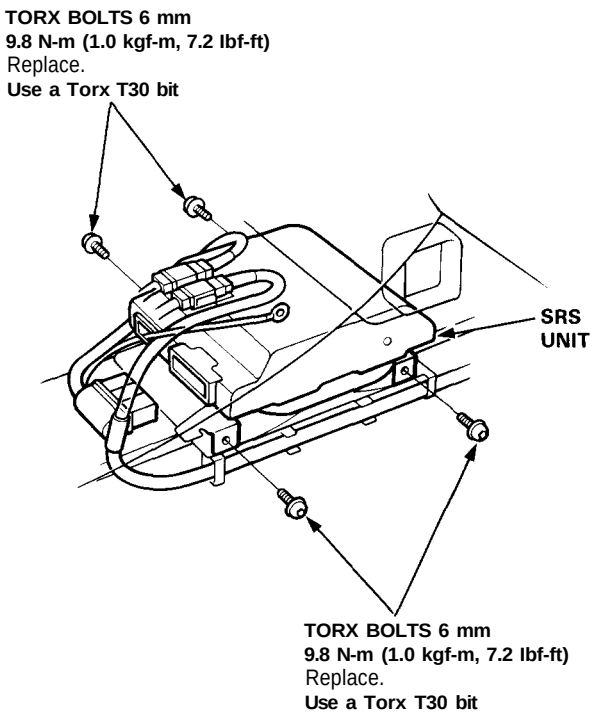

2. Clip the SRS main harness into the harness holder, then connect the SRS main harness 18P connector to the SRS unit; push it into position until it clicks.

3. Install the carpet.

4. Remove the short connectors (RED) from the passenger's airbag, and remove the SRS Service Connector from the SRS main harness.

5. Reconnect the passenger's airbag 3P connector to the SRS main harness 3P connector, then reinstall the glove box.

6. Remove the short connector (RED) from the driver's airbag, and remove the SRS Service Connector from the cable reel.

7. Reconnect the driver's airbag 3P connector to the cable reel 3P connector. Attach the short connector (RED) to the access panel, then reinstall the panel on the steering wheel.

8. Remove the short connectors (RED) from both seat belt tensioners, then attach the short connectors (RED) to their holders.

9. Reconnect the floor wire harness 3P connectors to the driver's and passenger's belt tensioners.

10. Reconnect the battery positive cable, then the negative cable.

11. After installing the SRS unit, confirm proper system operation:
Turn the ignition switch ON (II); the SRS indicator light should come on for about six seconds and then go off.

Seat Belt Tensioner Removal

CAUTION:

- **Do not install used SRS parts from another car: use only new SRS parts.**
- **Carefully inspect the seat belt tensioner before installing it. Do not install a tensioner that shows signs of being dropped or improperly handled, such as dents, cracks or deformation.**
- **The shoulder harness anchor bolt must be removed before you remove the tensioner.**
- **After completing repair work, be sure to remove SRS Service Connector.**

1. Before disconnecting any part of the SRS wire harness, install the short connectors (RED) (see page 24-10).

2. Remove the rear trim panel, upper trim panel, rear side trim panel, and rear pillar trim panel.

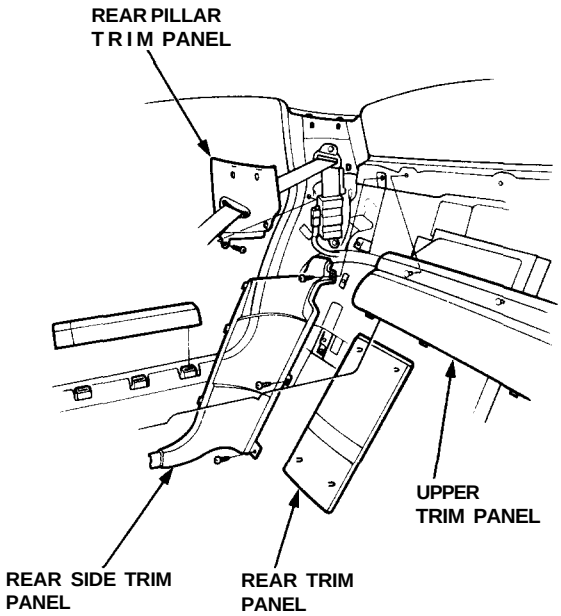

3. Disconnect the 3P connector from the seat belt tensioner, then install the short connectors (RED) on the seat belt tensioners.

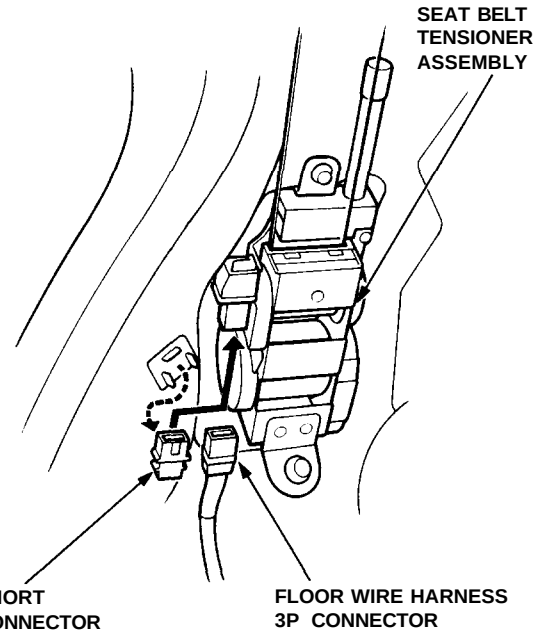

4. Remove the shoulder harness anchor bolt, then remove the two seat belt tensioner mounting bolts and tensioner.

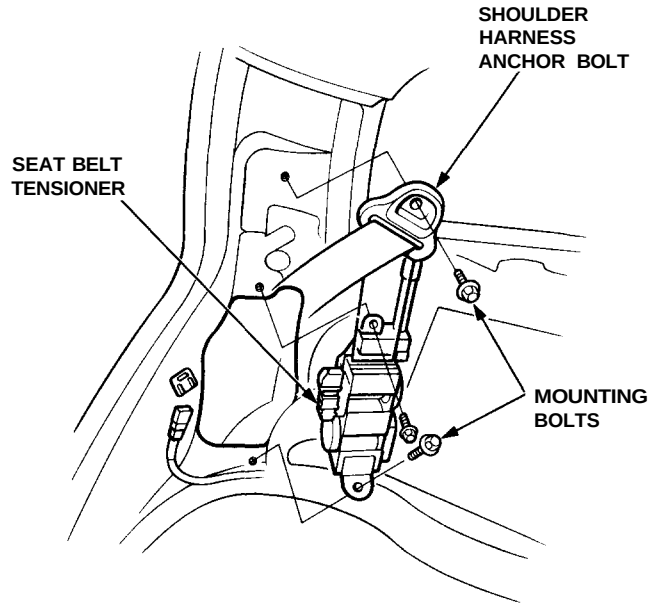

Seat Belt Tensioner Installation

CAUTION:
- **Be sure to install the harness wires so that they are not pinched or interfering with other parts.**
- **Be sure the battery cables are disconnected.**

1. Install the seat belt tensioner.

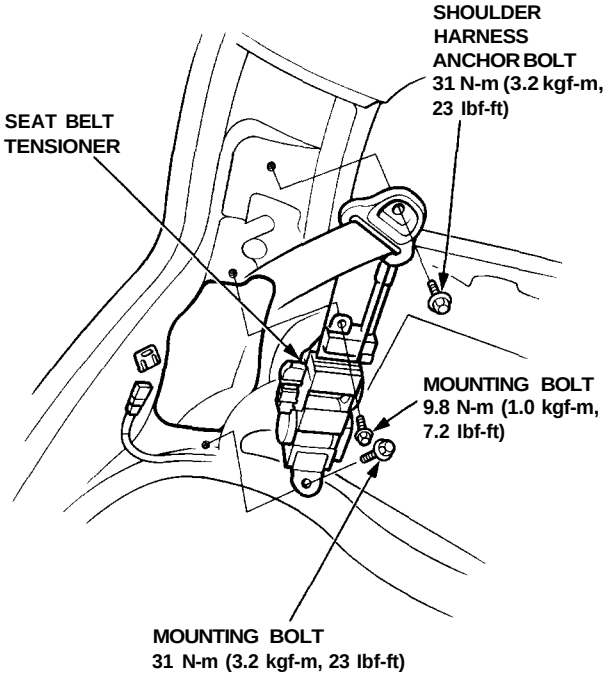

2. Reinstall the shoulder harness anchor bolt.

3. Remove the short connector (RED) from the tensioner, then connect the floor wire harness connector to the tensioner.

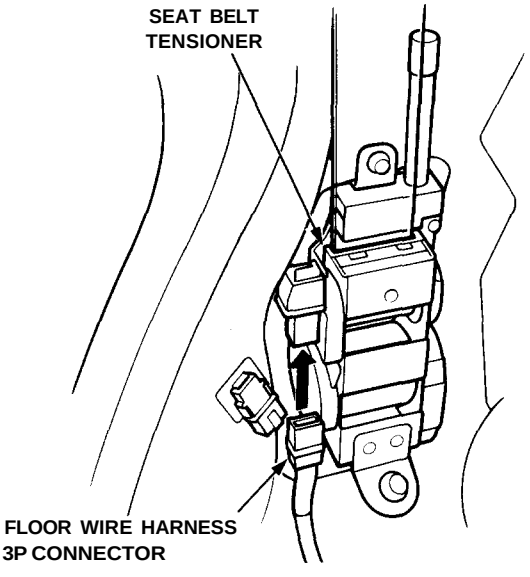

4. Reinstall the rear pillar trim panel, rear side trim panel, upper trim panel, and rear trim panel.

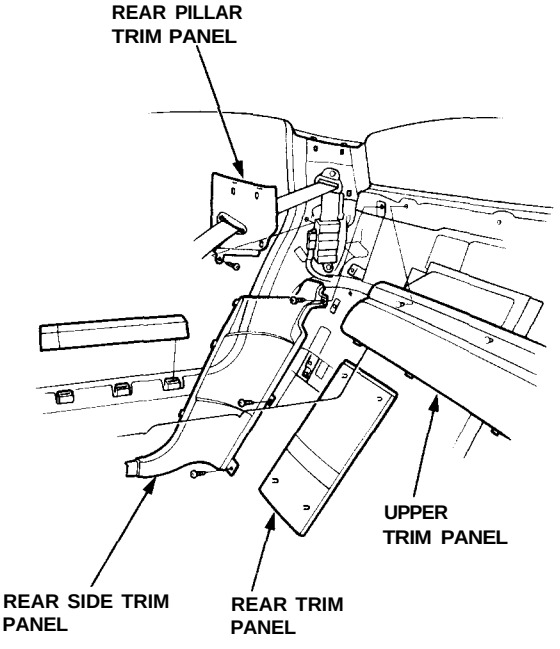

5. Remove the short connector (RED) from the passenger's airbag, and remove the SRS Service Connector from the SRS main harness.

6. Reconnect the passenger's airbag 3P connector to the SRS main harness 3P connector, then reinstall the glove box.

7. Remove the short connector (RED) from the driver's airbag, and remove the SRS Service Connector A from the cable reel connector.

8. Reconnect the driver's airbag 3P connector to the cable reel 3P connector. Attach the short connector (RED) to the access panel, then reinstall the panel on the steering wheel.

9. Reconnect the battery positive cable, then the negative cable.

10. After installing the seat belt tensioner, confirm proper system operation.
    - Turn the ignition switch ON (II); the SRS indicator light should come on for about six seconds and then go off.
    - Confirm operation of the seat belt retractor.

SUPPLEMENTAL RESTRAINT SYSTEM (SRS)

The Acura NSX & NSX-T SRS includes a driver's airbag in the steering wheel hub, a front passenger's airbag in the dashboard above the glove box, and seat belt tensioners in the seat belt retractors. Information necessary to safely service the SRS is included in this Service Manual.Items marked with an asterisk (*) on the contents page include, or are located near SRS components. Servicing, disassembling,or replacing these items require special precautions and tools, and should be done only by an autho–rized
Acura dealer.

⚠ WARNING

- **To avoid rendering the SRS inoperative, which could lead to personal injury or death in the event of severe frontal collision, all service work must be performed by an authorized Acura dealer.**
- **Improper service procedures, including incorrect removal and installation of the SRS could lead to personal injury caused by unintentional deployment of the airbags and seat belt tensioners.**
- **Do not bump or impact the SRS unit when the ignition switch is ON (II), or for at least 3 minutes after the ignition switch is turned OFF; otherwise, the system may fail in a collision, or the airbags may deploy.**
- **SRS electrical connectors are identified by yellow color coding. Related components are located in the steering column, front console, dashboard, dashboard lower panel, and in the dashboard above the glove box. Do not use electrical test equipment on these circuits.**